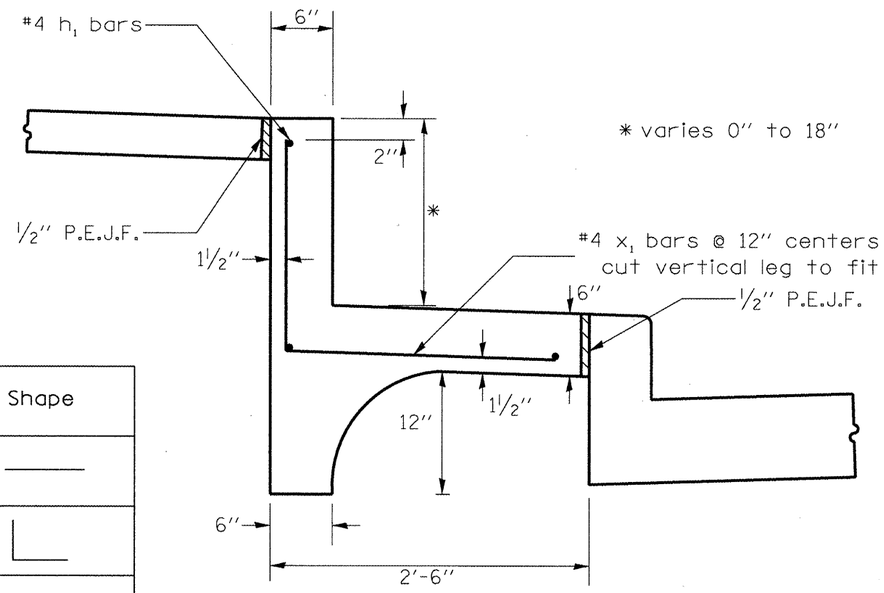

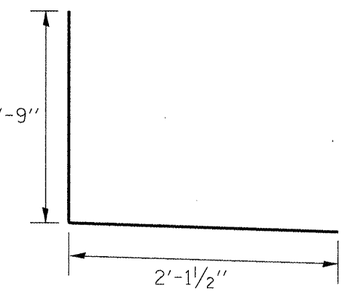

x_1 bar

Quantities

Bar	No.	Size	Length	Shape
h_1	12	#4	27′-9″	———
x_1	108	#4	3′-10 1/2″	L
Reinforcement Bars			Pound	502
Concrete Structures			CU. YD.	10

Notes: Lap length for h bars = 1′-4″.
Excavation required for the construction of the curb wall shall be paid for as EARTH EXCAVATION.

FILE NAME = miscsheets.dgn	USER NAME = horstkj	DESIGNED -	REVISED -
		DRAWN -	REVISED -
	PLOT SCALE = 100.0000 ′ / in.	CHECKED -	REVISED -
	PLOT DATE = 3/21/2012	DATE -	REVISED -

STATE OF ILLINOIS
DEPARTMENT OF TRANSPORTATION

CURB WALL DETAIL

SCALE: | SHEET NO. OF SHEETS | STA. TO STA.

F.A.P. RTE.	SECTION	COUNTY	TOTAL SHEETS	SHEET NO.
317	16W-1, RS-3	FULTON	347	167

CONTRACT NO. 88795

ILLINOIS FED. AID PROJECT