CONTRACT NO. 72829

F.A. RTE.	SECTION	COUNTY	TOTAL SHEETS	SHEET NO.
75	84-12; 11-3	*	729	475
STA. N/A		TO STA. N/A		
FED. ROAD DIST. NO. 5	ILLINOIS	FED. AID PROJECT		

* SANGAMON AND CHRISTIAN

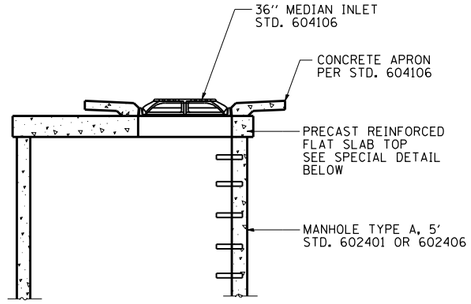

DETAIL OF STANDARD 36" MEDIAN INLET ON FLAT SLAB TOP

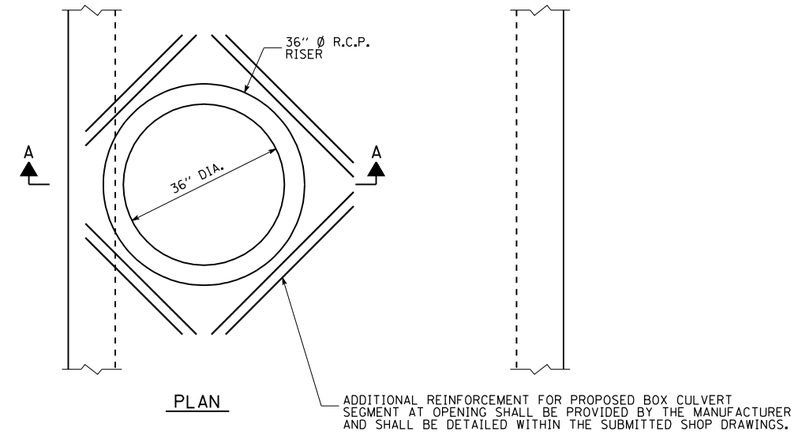

PLAN

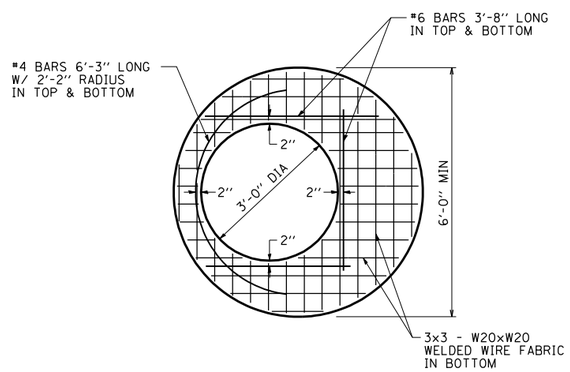

5' FLAT SLAB TOP DETAIL WITH 36" OPENING

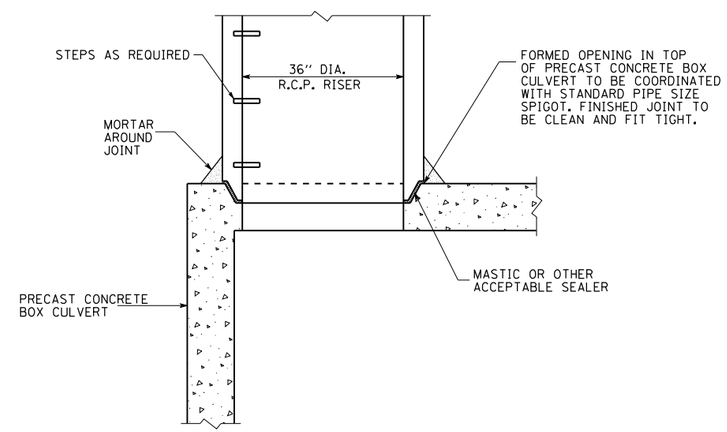

SECTION A-A

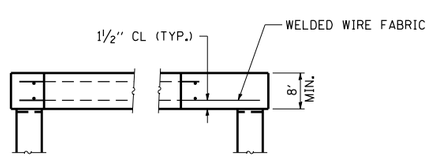

TYPICAL SLAB TOP SECTION FOR 5' MANHOLE

RISER PIPE CONNECTION TO PRECAST BOX CULVERT DETAIL

SEE DRAINAGE PLANS FOR PROPOSED LOCATIONS

COST FOR RISER PIPE CONNECTION
INCLUDED IN HTE COST FOR
THE VARIOUS ITMES INVOLVED.

REVISIONS	
NAME	DATE

ILLINOIS DEPARTMENT OF TRANSPORTATION

DRAINAGE STRUCTURE DETAILS

SCALE: N/A DRAWN BY: CMT

DATE: 03/06/2012 CHECKED BY: CMT

Default
L:\DOT\030660\draw\sheets\0672829-sht-details.004.dgn
3/16/2012