EXISTING AND PROPOSED CONTROLLER SEQUENCE

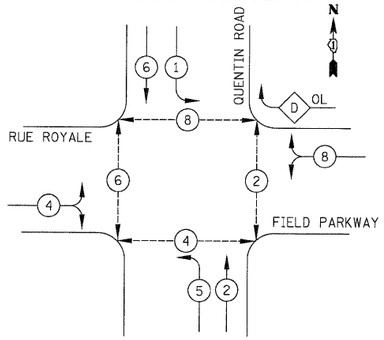

LEGEND

- DUAL ENTRY PHASE
- SINGLE ENTRY PHASE
- OL — OVERLAP
- PEDESTRIAN PHASE
- NUMBER REFERS TO ASSOCIATED PHASE

PHASE DESIGNATION DIAGRAM

RIGHT TURN OVERLAP PHASE DISIGNATION

OVERLAP LETTER		PERMISSIVE PHASE		PROTECTED PHASE
D	=	8	+	1

EXISTING AND PROPOSED EMERGENCY VEHICLE PREEMPTION SEQUENCE

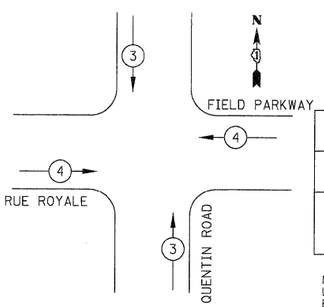

EMERGENCY VEHICLE PREEMPTORS		
EMERGENCY VEHICLE PREEMPTOR	3	4
MOVEMENT	↑↓	←→

NOTE: THE EMERGENCY VEHICLE PREEMPTION PUSH-BUTTON LOCATED INSIDE THE FIRE STATION SHALL PLACE A CALL TO EMERGENCY VEHICLE PREEMPTION SEQUENCE NUMBER 4.

I.D.O.T.
TRAFFIC SIGNAL INSTALLATION
ELECTRICAL SERVICE REQUIREMENTS

TYPE	NO. LAMPS	WATTAGE INCAND.	WATTAGE LED	% OPERATION	TOTAL WATTAGE
SIGNAL (RED)	14		10	0.50	70.0
(YELLOW)	14		19	0.25	66.5
(GREEN)	14		11	0.25	157.5
ARROW	14		9	0.10	17.0
PED. SIGNAL	8		9	1.00	72.0
CONTROLLER	1		100	1.00	100.0
VIDEO SYSTEMS	1		150	1.00	150.0
LUMINAIRE	4	250		0.50	500.0
FLASHER				0.50	
				TOTAL =	1133.0

ENERGY COSTS TO: LAKE COUNTY DIVISION OF TRANSPORTATION
600 W. WINCHESTER ROAD
LIBERTYVILLE, IL 60048

ENERGY SUPPLY: CONTACT: DONALD PESCE
PHONE: (847) 870-2057
COMPANY: COM ED

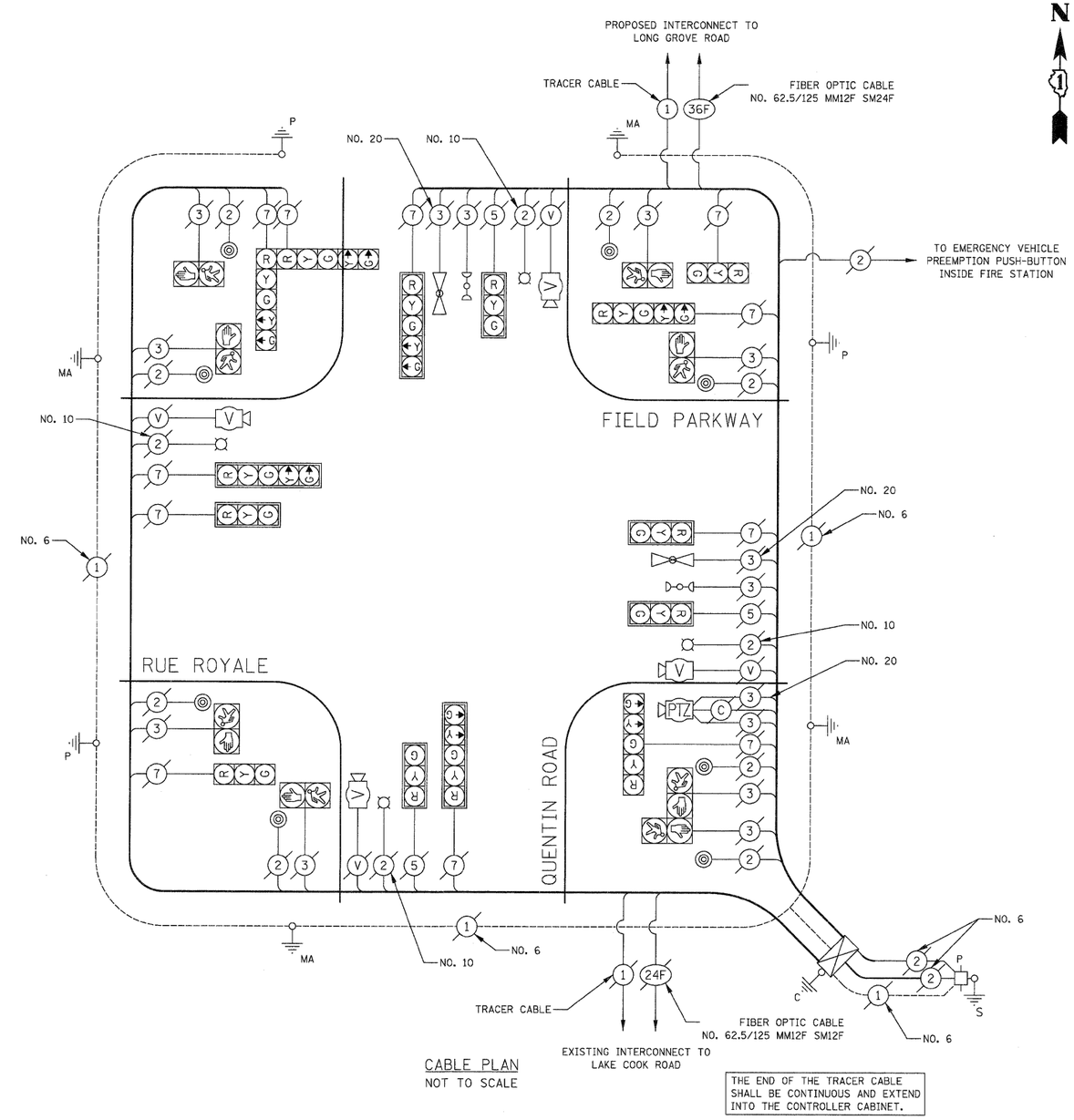

CABLE PLAN
NOT TO SCALE

THE END OF THE TRACER CABLE SHALL BE CONTINUOUS AND EXTEND INTO THE CONTROLLER CABINET.

NOTE:
THE TRAFFIC SIGNAL CONTROLLER EQUIPMENT FOR THIS PROJECT SHALL BE "ECONOLITE" AND NTCIP COMPLIANT TO MATCH THE EXISTING ADJACENT SYSTEM.

FINAL SURVEY			
NOTE BOOK	SURVEYED	BY	DATE
NO.	PLOTTED		
	TEMPLATE		
	AREAS		
	AREAS CHECKED		

ORIGINAL SURVEY			
NOTE BOOK	SURVEYED	BY	DATE
NO.	PLOTTED		
	TEMPLATE		
	AREAS		
	AREAS CHECKED		

CIVILTECH
450 E Devon Ave, Suite 300
Itasca, Illinois 60143
Tel: 630.773.3900 Fax: 630.773.3975
www.civiltechinc.com

DESIGNED	BRD	REVISED	-
DRAWN	BRD	REVISED	-
CHECKED	JJE	REVISED	-
DATE	10/24/2011	REVISED	-

STATE OF ILLINOIS
DEPARTMENT OF TRANSPORTATION

NO SCALE

CABLE PLAN, SEQUENCE OF OPERATION & EMERGENCY VEHICLE PREEMPTION SEQUENCE
QUENTIN ROAD AT RUE ROYALE/FIELD PARKWAY

SHEET NO. 1 OF 1 SHEETS

F.A.U. RTE.	SECTION	COUNTY	TOTAL SHEETS	SHEET NO.
364	02-00051-08-WR	LAKE	188	107
		CONTRACT NO. 63649		

FED. ROAD DIST. NO. 1 | ILLINOIS | FED. AID PROJECT