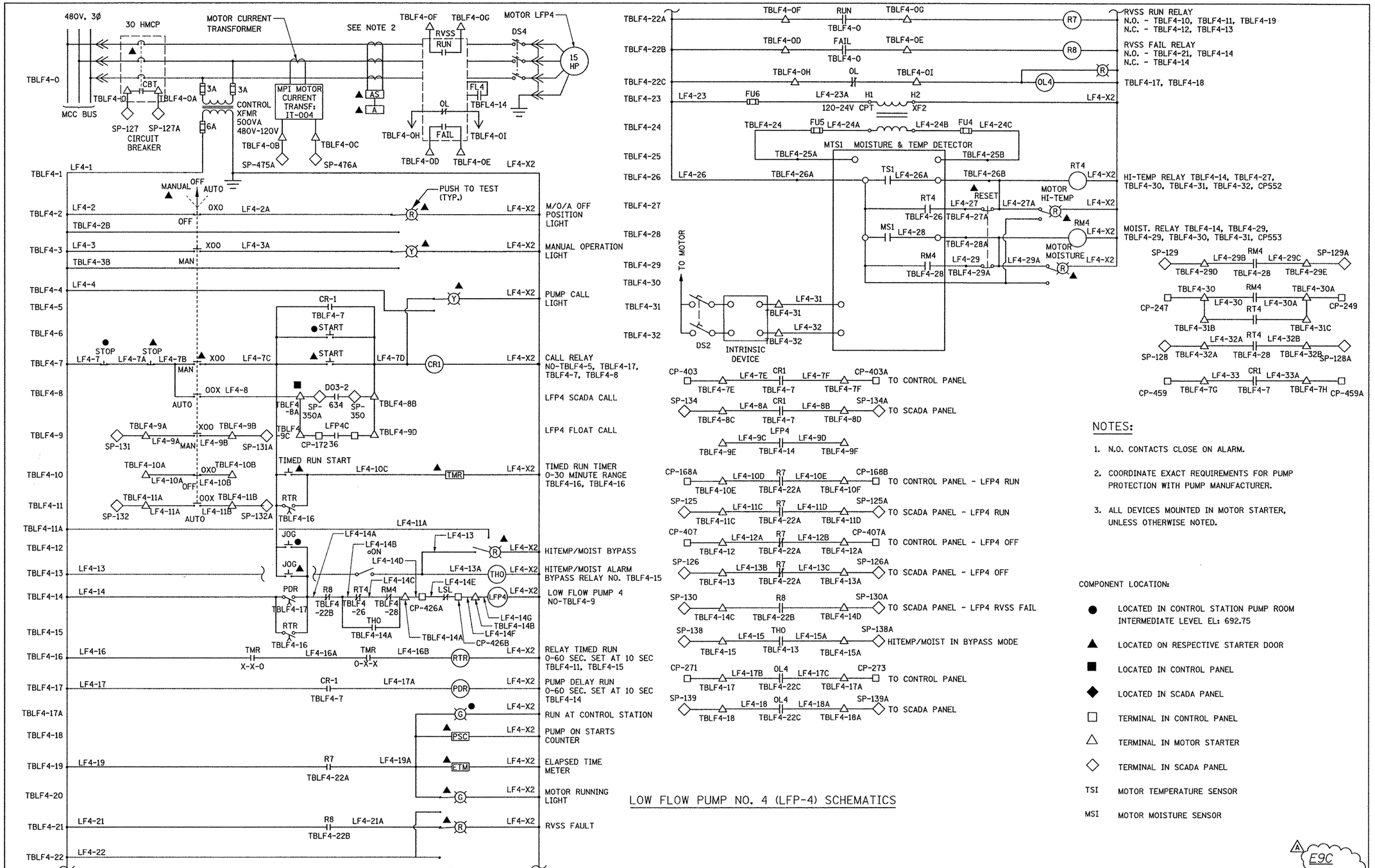

NOTES:

1. N.O. CONTACTS CLOSE ON ALARM.
2. COORDINATE EXACT REQUIREMENTS FOR PUMP PROTECTION WITH PUMP MANUFACTURER.
3. ALL DEVICES MOUNTED IN MOTOR STARTER, UNLESS OTHERWISE NOTED.

COMPONENT LOCATION:

- ● LOCATED IN CONTROL STATION PUMP ROOM INTERMEDIATE LEVEL EL: 692.75
- ▲ LOCATED ON RESPECTIVE STARTER DOOR
- ■ LOCATED IN CONTROL PANEL
- ◆ LOCATED IN SCADA PANEL
- □ TERMINAL IN CONTROL PANEL
- △ TERMINAL IN MOTOR STARTER
- ◇ TERMINAL IN SCADA PANEL
- TSI MOTOR TEMPERATURE SENSOR
- MSI MOTOR MOISTURE SENSOR

LOW FLOW PUMP NO. 4 (LFP-4) SCHEMATICS

A E9C

KNIGHT Engineers & Architects	USER NAME = $USER$	DESIGNED - MCP	REVISED 4-19-12
		DRAWN - MLB	REVISED ADDENDUM A 5-23-12
	PLOT SCALE = $SCALE$	CHECKED - MCP	REVISED -
	PLOT DATE = $DATE$	DATE 03-22-2012	REVISED -

STATE OF ILLINOIS
DEPARTMENT OF TRANSPORTATION

PUMP STATION 47 LOW FLOW PUMP NO. 4 SCHEMATICS

SCALE: | SHEET NO. OF SHEETS | STA. TO STA.

F.A.P. RTE.	SECTION	COUNTY	TOTAL SHEETS	SHEET NO.
338/IL 59	2011-035-I	DUPAGE	181	174

CONTRACT NO. 60P41

ILLINOIS FED. AID PROJECT