STATE OF ILLINOIS
DEPARTMENT OF TRANSPORTATION

| T.R. RTE. | SECTION | COUNTY | TOTAL SHEETS | SHEET NO. |
|---|---|---|---|---|
| 167 | 04-01225-00-BR | WILLIAMSON | 16 | 5 |
| STA 12+00 | | STA 18+50 | | |
| ROAD DIST. | | ILLINOIS | | |

CONTRACT No. 99299

Sheet 2 of 9

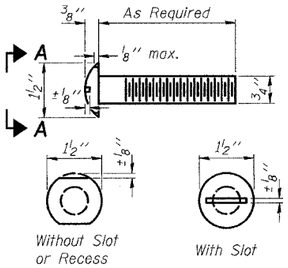


## VIEW A-A
## ROUND HEAD BOLT

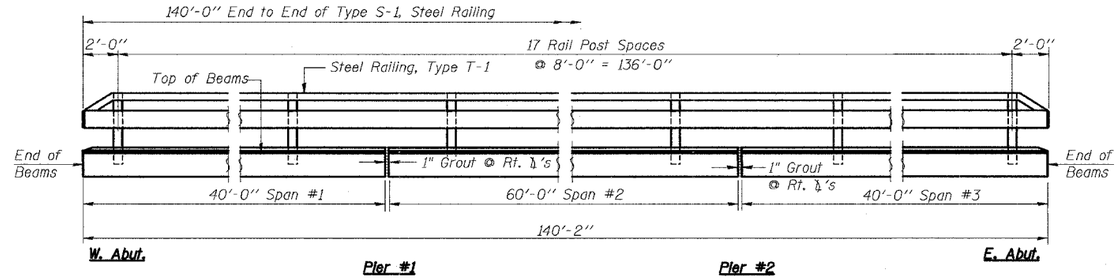


## ELEVATION
**Showing Inside Face of Rail**

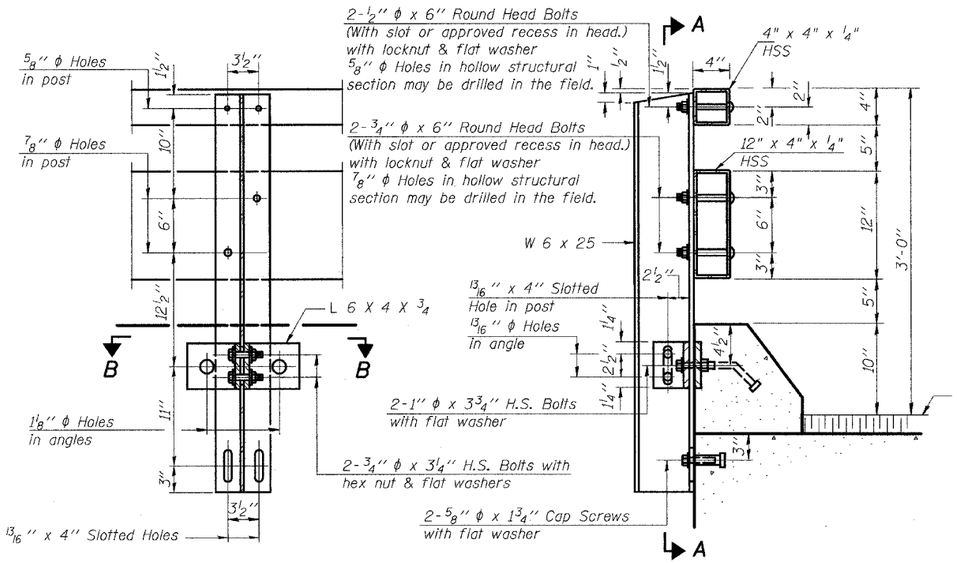


## SECTION A-A

## SECTION AT RAIL POST

* Threaded areas shall be plugged or blocked off during casting of beam.

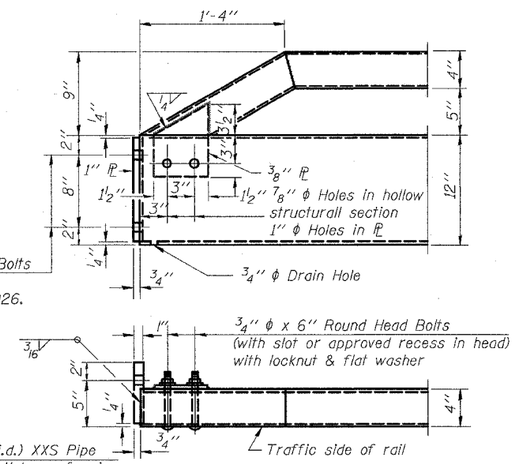


## END OF RAIL DETAILS

## NOTES

Hollow structural sections shall conform to the requirements of ASTM designation A 500 Grade B Structural Steel Tubing and shall meet the longitudinal CVN requirements of 15 ft-lbs at 0 °F.

All other steel shapes and plates shall conform to the requirements of AASHTO M 270 Grade 36 except posts and angles shall conform to AASHTO M 270, Grade 50.

Bolts, cap screws, and nuts shall conform to the requirements of ASTM designation A 307 except for high strength bolts, nuts and washers noted which shall conform to AASHTO M 164.

All bolts, nuts, cap screws, washers and lock washers shall be galvanized according to AASHTO M 232.

All posts, railing, rail splices, anchor devices and angles shall be galvanized after shop fabrication according to AASHTO M 111 and ASTM A 385. Galvanized rail shall not be painted.

Railing shall be according to Section 509 of the Standard Specifications, except as noted, and will be paid for at the contract unit price per foot for STEEL RAILING, TYPE T-1.

All field drilled holes shall be coated with an approved zinc rich paint before erection.

The lower portion of the post flange in contact with concrete shall receive two coats of asphalt paint conforming to Section 1060.07 Type II or place 1/8" fabric bearing pad between the post and concrete.

The 3/4" ϕ high strength bolts used to connect the 6 x 4 x 3/4 angles to the post shall be tightened according to Article 505.04(f)(2) of the Standard Specifications. The 1" ϕ high strength bolts connecting the angles to the concrete shall be tightened to a snug fit and given an additional 1/8 turn. The 5/8" ϕ cap screws in bottom of posts shall be tightened to a snug fit only.

For multi-span bridges, sufficient 1/4" x 6" x 1'-5" galvanized steel shims shall be provided to align rail between adjacent spans. Cost included with Steel Railing.

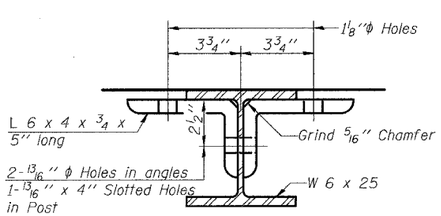


## SECTION B-B

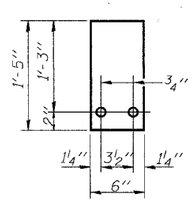


## 1/4" SHIM PLATE

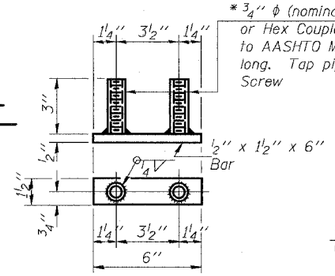


## BOTTOM ANCHOR DEVICE

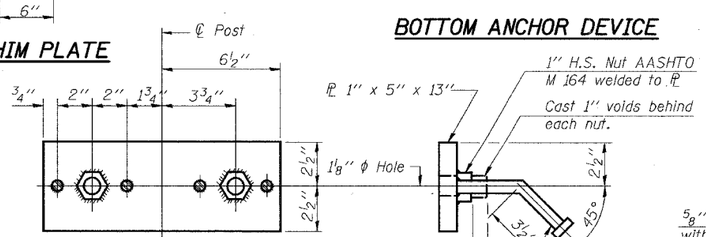


## TOP ANCHOR DEVICE

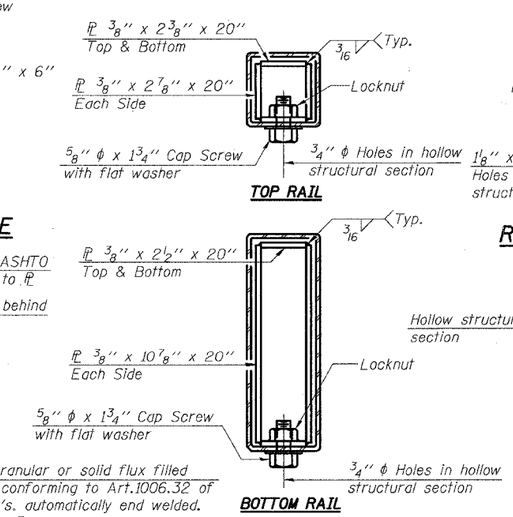


## SECTIONS AT RAIL SPLICE

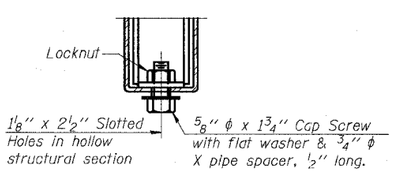


## RAIL SPLICE CONNECTION AT EXPANSION JT.

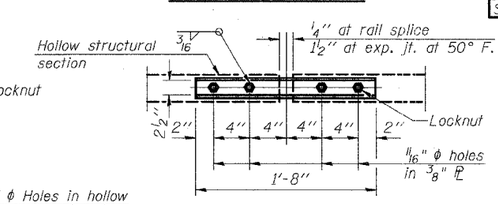


## PLAN-BOTT. SPLICE PL TYPICAL

## BILL OF MATERIAL

| Item | Unit | Quantity |
|---|---|---|
| Steel Railing Type T-1 | Foot | 280 |

## TYPE T-1 STEEL RAILING
## TR 167 OVER ICG RAILROAD
## WILLIAMSON COUNTY
## SECTION 04-01225-00-BR

R-24A 10-22-04 (9'-6" Maximum Post Spacing)