ROUTE NO.	SECTION	COUNTY	TOTAL SHEETS	SHEET NO.
T.R. 79A	04-01177 -00-BR	UNION	15	14
FED. ROAD DIST. NO.		ILLINOIS	CONTRACT NO. 99275	

Hatched area to be poured after beams are in place.

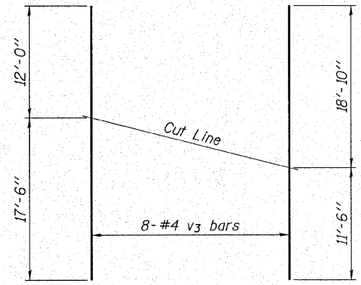

CUTTING DIAGRAM - NE & SW WINGS

Order v_3 bars full length. Cut as shown and use the remainder in opposite Wingwall.

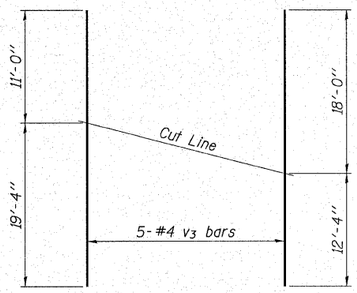

CUTTING DIAGRAM - NW & SE WINGS

Order v_3 bars full length. Cut as shown and use the remainder in opposite Wingwall.

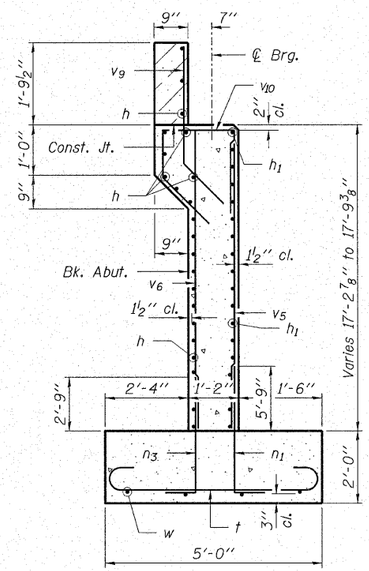

SECTION A-A

qu max = 4.4 k.s.f.

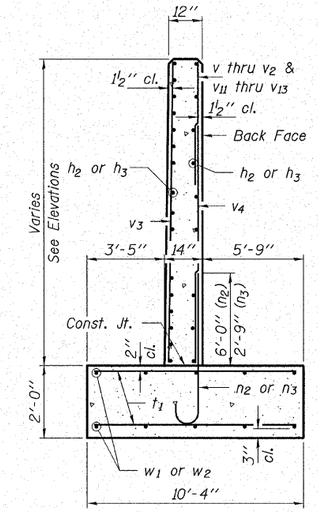

SECTION B-B

qu max = 3.8 k.s.f.

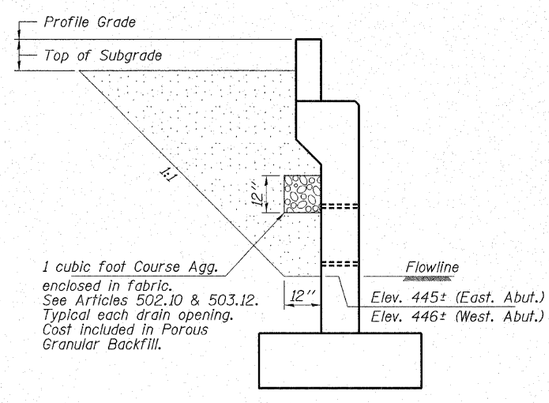

BACKFILL DETAIL

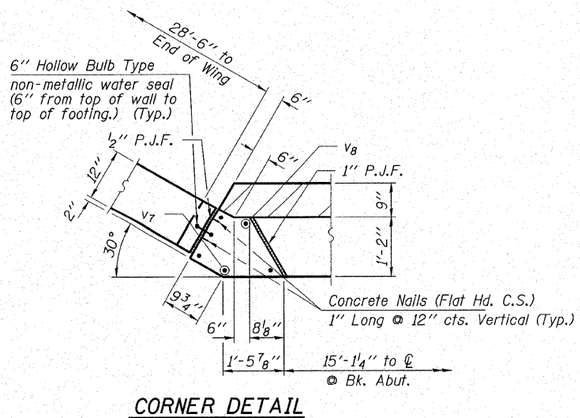

CORNER DETAIL

(Long Wing)

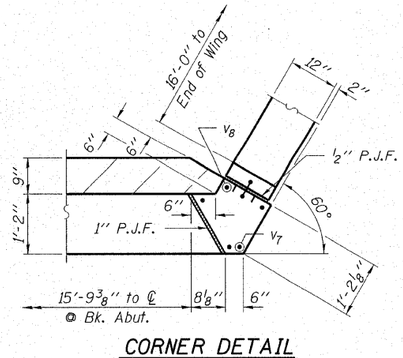

CORNER DETAIL

(Short Wing)

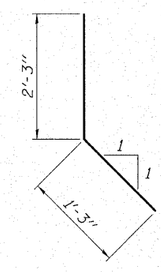

BAR v_9

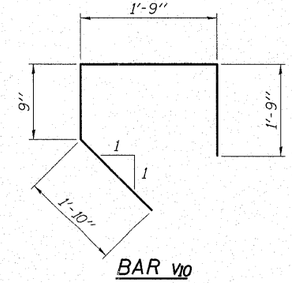

BAR v_{10}

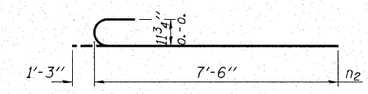

BAR n_1

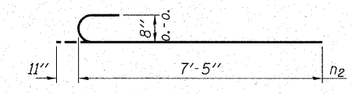

BAR n_2

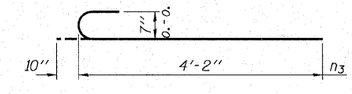

BAR n_3

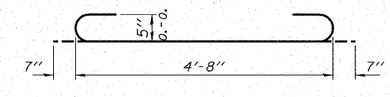

BAR t

HAMPTON, LENZINI & RENWICK, INC.
CIVIL & STRUCTURAL ENGINEERS
3085 STEVENSON DRIVE, SUITE 201
SPRINGFIELD, ILLINOIS 62703
(217) 546-3400
ELGIN • SPRINGFIELD

PROJECT NUMBER: 12-92-0007-i		DATE: 04/03/07
DESIGNED: T.P.L.	CHECKED: S.W.M.	DRAWN: D.B.

ABUTMENT DETAILS

SECTION 04-01177-00-BR

T.R. 79A / MOUNTAIN GLEN ROAD

UNION COUNTY

STR. NO. 091-3222 / STATION 10+05