F.A.P. RTE.	SECTION	COUNTY	TOTAL SHEETS	SHEET NO.
365	01-00273-00-CH	KANE	172	48
STA.		TO STA.		
FED. ROAD DIST. NO.	ILLINOIS	FED. AID PROJECT		

CONTRACT NO. 83906

N

(IN FEET)
SCALE: 1" = 50'

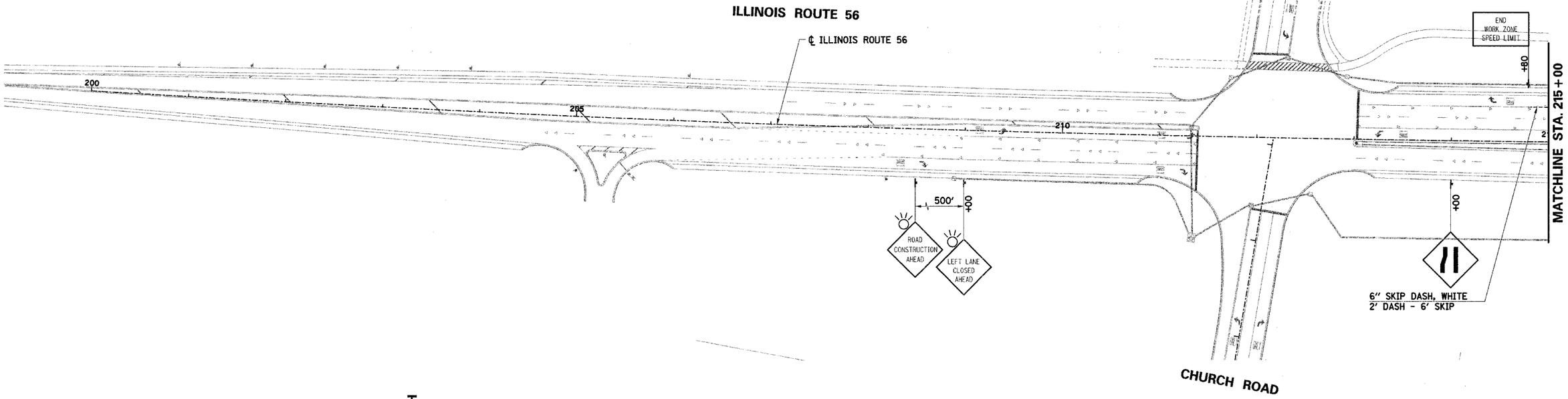

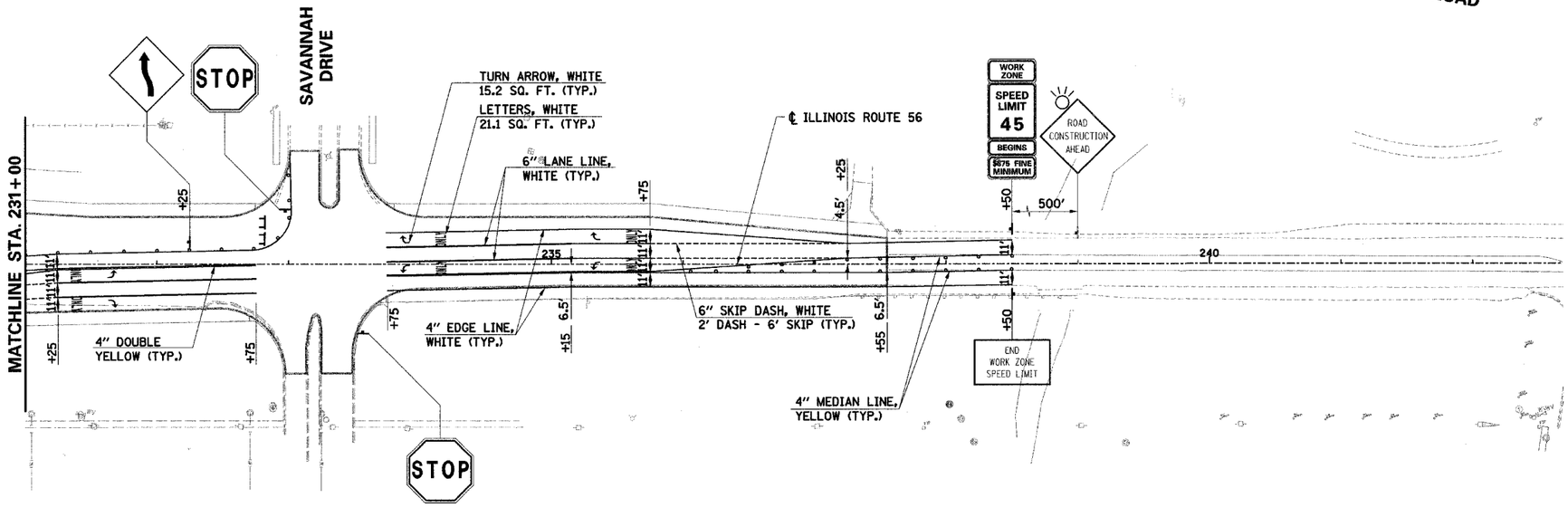

LEGEND

- WORK ZONE AREA
- TEMPORARY PAVEMENT AREA
- DRUM OR BARRICADE •
- ARROW BOARD
- SIGN ON PORTABLE OR PERMANENT SUPPORT
- TYPE III BARRICADES

• DRUM OR BARRICADE SPACING:
50' C-C ON TANGENTS
25' C-C ON TAPERS OR LANE SHIFTS
12' C-C ON RADII

ILLINOIS DEPARTMENT OF TRANSPORTATION

ILLINOIS ROUTE 56 AT KIRK / FARNSWORTH

SUGGESTED MAINTENANCE OF TRAFFIC
STAGE IV
SHEET 2 OF 3

SCALE: VERT. HORIZ.
DATE APR 06 2007

DRAWN BY BAH
CHECKED BY APS

PLAN	BY	DATE
SURVEYED		
PLOTTED		
ALIGNMENT CHECKED		
RT. OF WAY CHECKED		
CADD FILE NAME		
NOTE BOOK NO.		

PROFILE	BY	DATE
SURVEYED		
PLOTTED		
GRADES CHECKED		
B.M. NOTED		
STRUCTURE NOTATIONS CHKD		
NOTE BOOK NO.		

3:\HIDS\BESTITHMEC0010\401031_ROUTE56\DGN\401031_MOT01A.DGN
4/10/2007