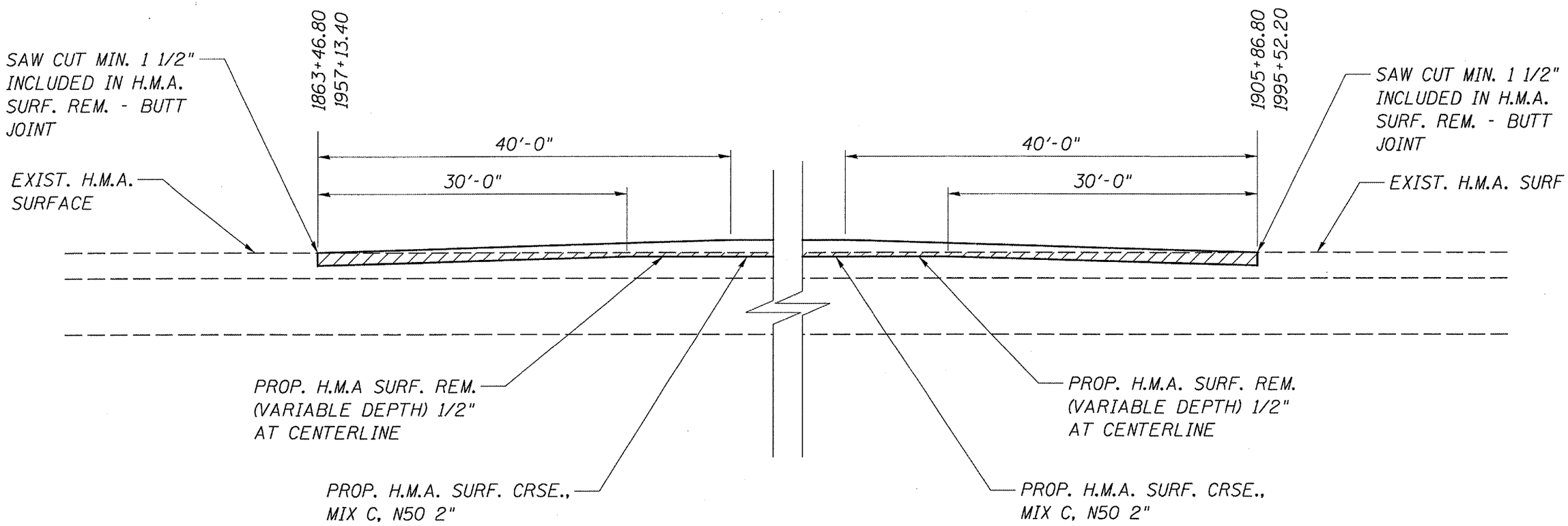

BUTT JOINT
FAP 317 (US 24)
SECTION (1,2,3&4)RS-8
ADAMS COUNTY