CONTRACT NO. 70641

F.A.I. RTE.	SECTION	COUNTY	TOTAL SHEETS	SHEET NO.
74	*	McLEAN	49	28

* (57-21B&57-22B)&BDR

SHEET 8 OF 8

NORTH AND SOUTH ABUTMENT JOINT DETAILS
SN 057-0126

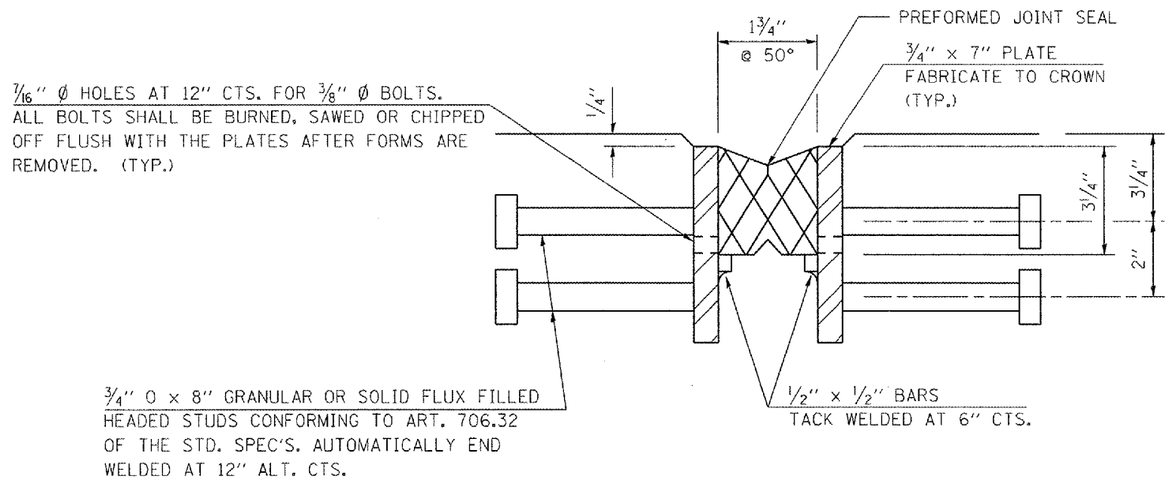

EXISTING JOINT

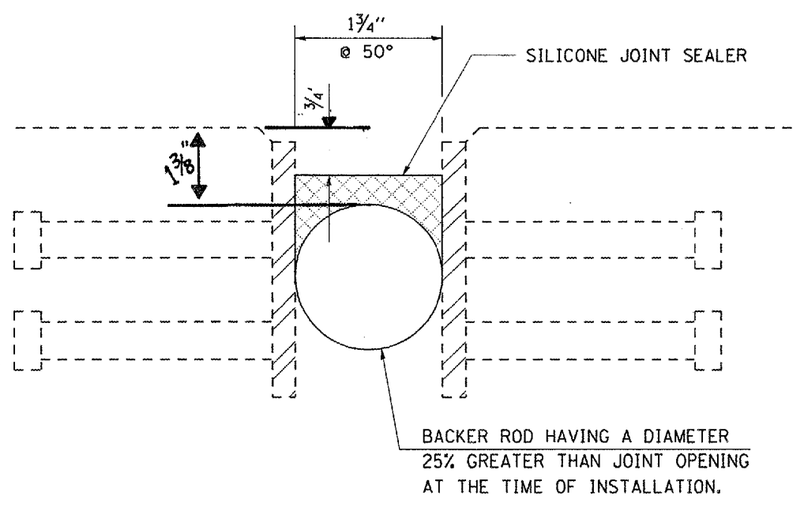

PROPOSED JOINT

NOTE:
REMOVAL OF THE PREFORMED JOINT SEAL IS INCLUDED IN THE COST OF SILICONE JOINT SEALER.

BILL OF MATERIALS

ITEM	UNITS	TOTAL
SILICONE JOINT SEALER, 1 3/4 "	FOOT	80

ILLINOIS DEPARTMENT OF TRANSPORTATION
NO. & SO. ABUTMENT JOINT DETAILS
F.A.I. ROUTE 74
SECTION (57-21B&57-22B)&BDR
McLEAN COUNTY
SN 057-0126

SCALE: NA — DRAWN BY: JRP
DATE: 03/24/07 — CHECKED BY:

PLOT DATE = 3/30/2007
DGN NAME = c:\projects\d801187 \d01\70641ecw.dgn
PLOT SCALE = 100.0000 ' / IN.
USER NAME = pcalgre