CONTRACT NO. 70185

F.A.P. RTE.	SECTION	COUNTY	TOTAL SHEETS	SHEET NO.
332	*	VERMILION	62	22

* (47Z-3)RS-1 & (52CS,48Z-1)RS-3
CONTRACT NO. 70185

① PROPOSED TYPICAL CROSS SECTION

STA 96+60.00 TO STA 100+35.00 (GILBERT ST.) ②

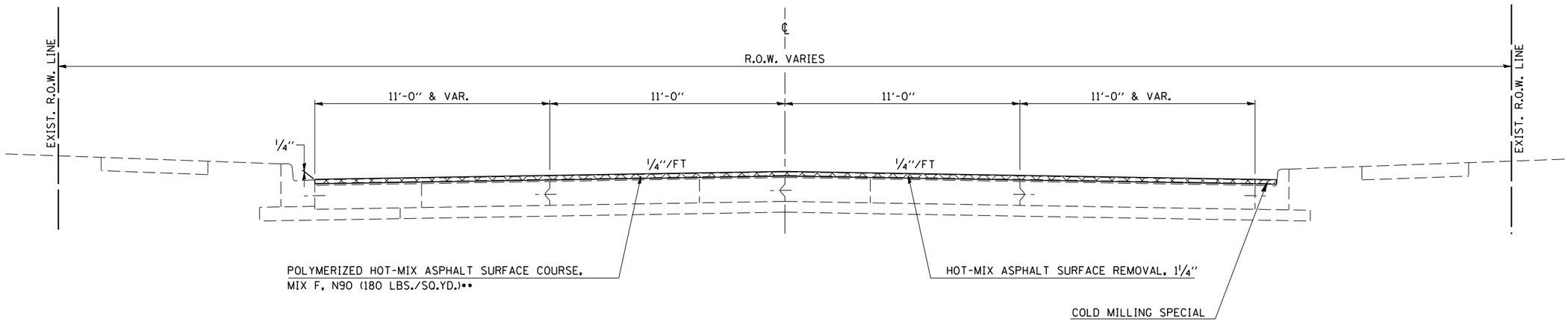

** THE POLYMERIZED HOT-MIX ASPHALT SURFACE COURSE, MIX F, N90 HAS BEEN CALCULATED AT 120 LB/SQ.YD./IN.

② PROPOSED TYPICAL CROSS SECTION

① STA 100+35.00 TO STA 146+50.00 (GILBERT ST.) ③

RAILROAD OMISSION: STA 133+59.91 TO STA 133+69.30

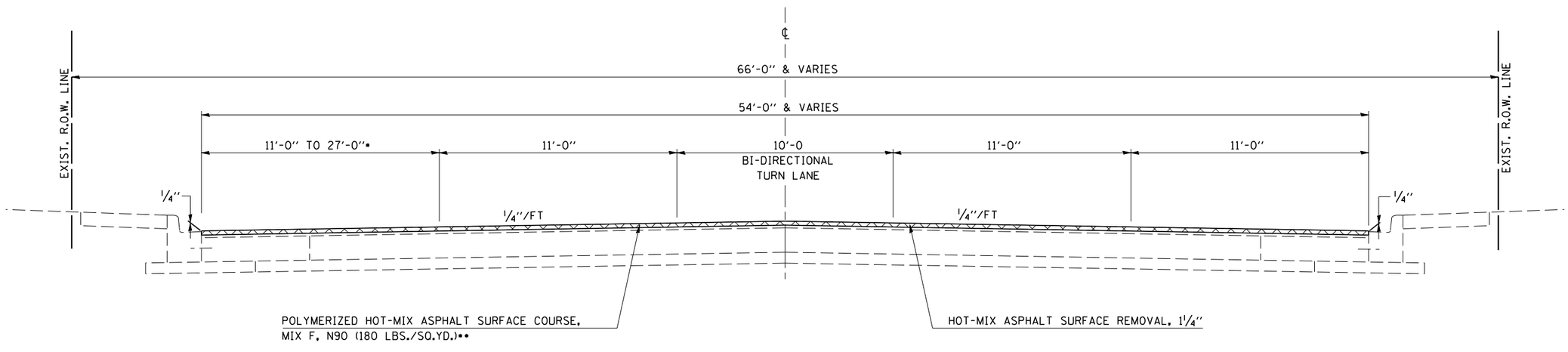

* 16'-0" RIGHT TURN LANE FROM 100+35.00 TO 103+20.00
** THE POLYMERIZED HOT-MIX ASPHALT SURFACE COURSE, MIX F, N90 HAS BEEN CALCULATED AT 120 LB/SQ.YD./IN.

PLOT DATE = 3/27/2007
FILE NAME = c:\pw_acts\d503801\d01\typicals.dgn
PLOT SCALE = 21.7727 ' / IN.
USER NAME = cerrolit