CONTRACT NO. 64560

F.A.P. RTE.	SECTION	COUNTY	TOTAL SHEETS	SHEET NO.
*	**	CARROLL	548	186
STA.		TO STA.		
FED. ROAD DIST. NO.	ILLINOIS	FED. AID PROJECT		

*ROUTE 17 (US 52 / IL 64)
**(1,2)RS & (3,1)RS-1

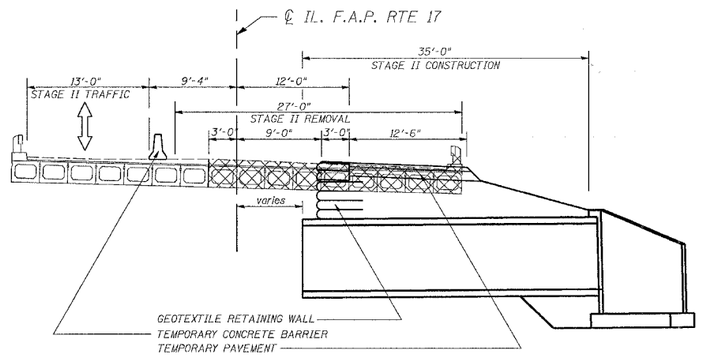

STAGE II REMOVAL AND CONSTRUCTION

ALL DIMENSIONS MEASURED PERPENDICULAR TO ℄ OF ROADWAY

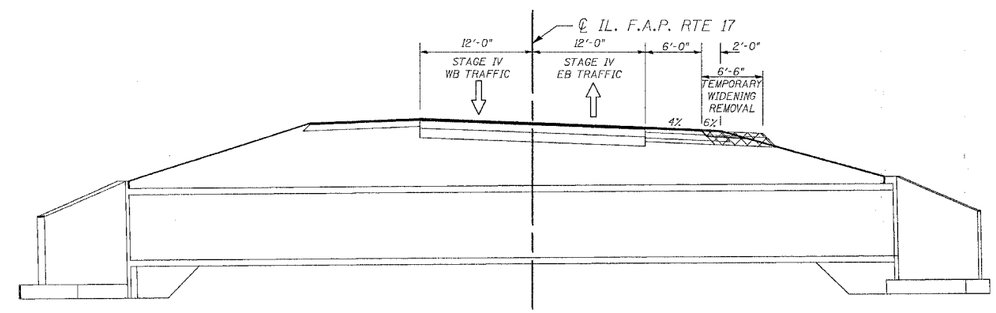

STAGE IV CONSTRUCTION

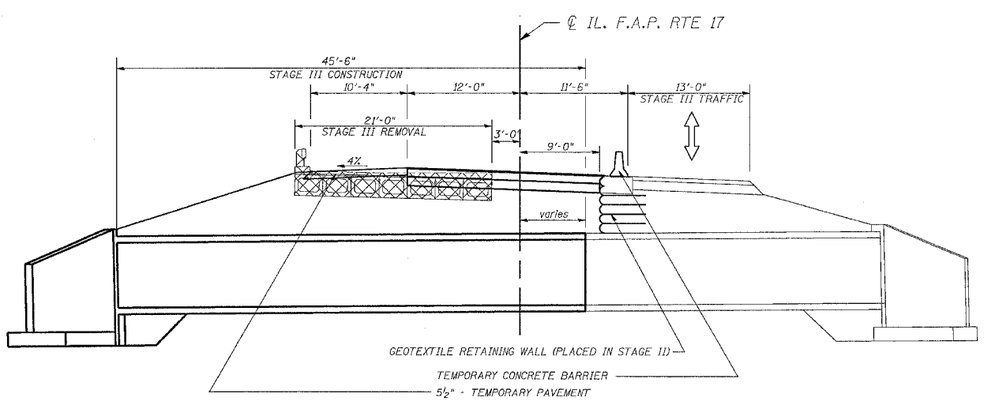

STAGE III REMOVAL AND CONSTRUCTION

ALL DIMENSIONS MEASURED PERPENDICULAR TO ℄ OF ROADWAY

Note: No Construction or Removal of Culvert No. 2 during Stage I.

REVISIONS	
NAME	DATE

ILLINOIS DEPARTMENT OF TRANSPORTATION
CONSTRUCTION STAGING
US RTE 52 / IL RTE 64
CULVERT NO. 2
F.A.P. RTE 17 SECTION (1,2)RS & (3-1)RS-1
CARROLL COUNTY
STA. 448+50.69

SCALE: VERT. HORIZ.
DATE
DRAWN BY
CHECKED BY

PLOT DATE = Fri Mar 23 18:18:30 2007
FILE NAME = c:\pr\projects\p2074001\p2740ts-tg.dgn
PLOT SCALE = 20.0000 ' / IN.
USER NAME = cushworth