CONTRACT NO. 62896

F.A.P. RTE.	SECTION	COUNTY	TOTAL SHEETS	SHEET NO.
55	99 (1&2) WRS-1	WILL	227	96
STA.		TO STA.		
FED. ROAD DIST. NO.	ILLINOIS	FED. AID PROJECT		

DDET 1 OF 3

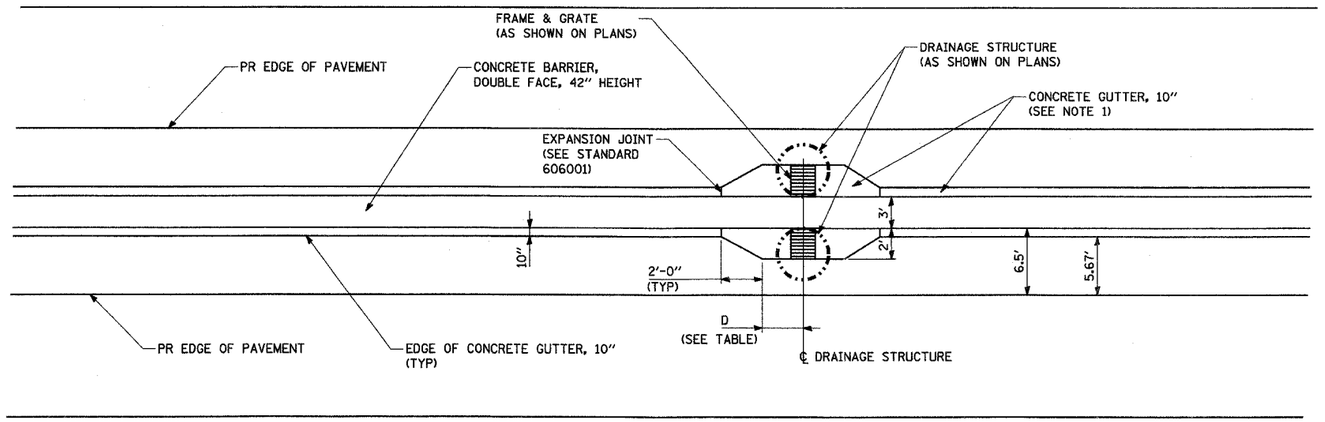

NOTES

1. THE COST OF ADDITIONAL WIDTH OF CONCRETE GUTTER AS SHOWN AT THE DRAINAGE STRUCTURES SHALL BE INCLUDED IN THE CONTRACT UNIT PRICE FOR CONCRETE GUTTER, 10".

CONCRETE GUTTER DETAIL AT DRAINAGE STRUCTURE

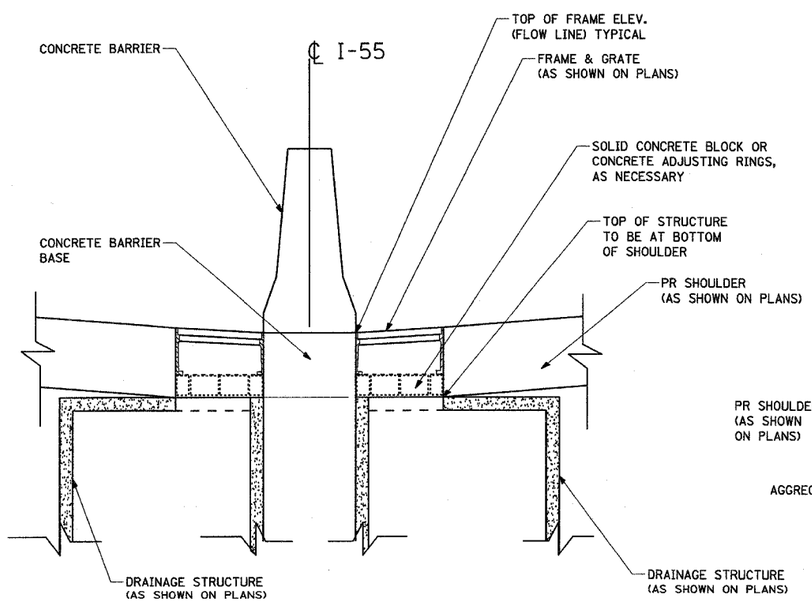

SAME P.G.L.
SIDE ELEVATION

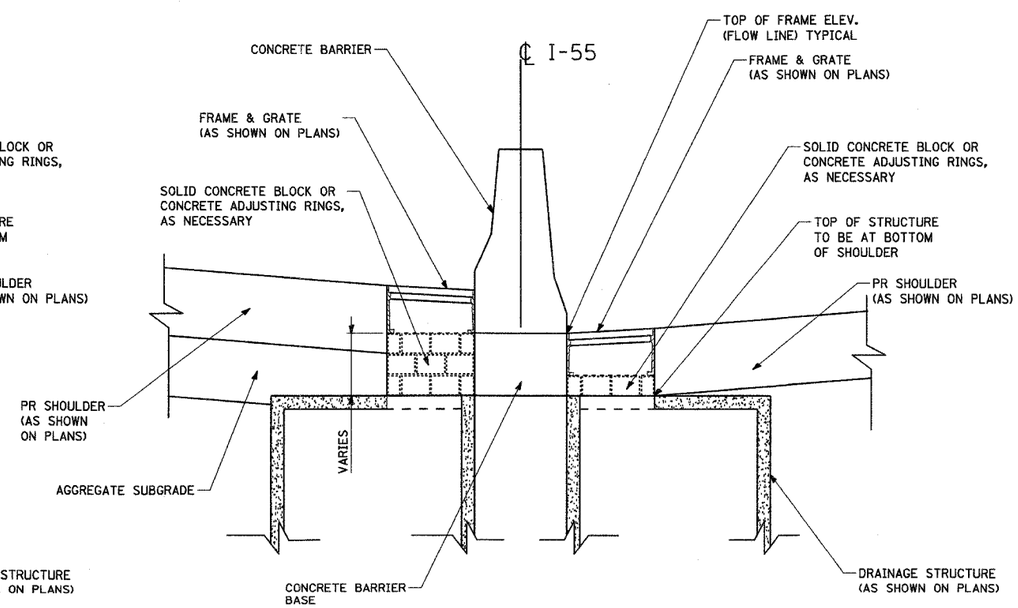

DIFFERENTIAL P.G.L.
SIDE ELEVATION

NOTES

1. THE COST OF SOLID CONCRETE BLOCK OR CONCRETE ADJUSTING RINGS SHALL BE INCLUDED IN THE CONTRACT UNIT PRICE OF DRAINAGE STRUCTURES OF TYPE OR SIZE SPECIFIED.

2. SEE STATE AND DISTRICT 1 STANDARDS FOR DRAINAGE STRUCTURE DETAILS.

CONCRETE ADJUSTING RINGS OR CONCRETE BLOCKS FOR TYPE 20 AND TYPE 21 F & G

PARSONS BRINCKERHOFF

SMITH ENGINEERING CONSULTANTS, INC.
www.smithengineering.com

REVISIONS	
NAME	DATE

ILLINOIS DEPARTMENT OF TRANSPORTATION

FAI ROUTE 55
US 30 (PLAINFIELD ROAD) TO 143RD STREET

DRAINAGE DETAILS

SCALE:
DATE: 02-23-2007

DRAWN BY JRM
CHECKED BY TEH

FINAL