CONTRACT NO. 62895

F.A.I. RTE.	SECTION	COUNTY	TOTAL SHEETS	SHEET NO.
55	99 (1&2) WRS	WILL	334	152
STA.		TO STA.		
FED. ROAD DIST. NO.	ILLINOIS	FED. AID PROJECT		

ROCK CHECK DAM - RIPRAP

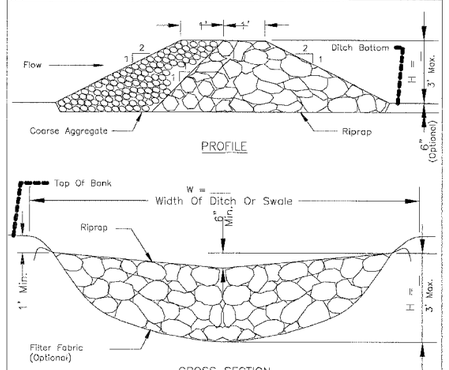

NOTES:
1. Filter fabric shall meet the requirements of material specification 592 GEOTEXTILE, Table 1 or 2, Class I, II, or IV and shall be placed over the cleared area prior to the placing of rock.
2. Coarse aggregate shall meet one of the following IDOT gradations, CA-1, CA-2, CA-3, or CA-4.
3. Riprap shall meet IDOT gradation RR-3 or RR-4 and meet Quality Designation A.
4. Coarse aggregate and riprap shall be placed according to construction specification 25 ROCKFILL using placement Method 1 and Class III compaction.
5. For added stability, the base of the dam may be keyed 6 inches into the soil.
6. See plans for spacing of dams and H dimensions.
7. Maximum drainage area to each dam is 10 acres.
8. ROCK CHECK DAM-COARSE AGGREGATE IL-605CA may be used for drainage areas under 2 acres.

REFERENCE
Project ____
Designed ____ Date ____
Checked ____ Date ____
Approved ____ Date ____

NRCS Natural Resources Conservation Service

STANDARD DWG. NO. IL-605R
SHEET 1 OF 1
DATE 1-29-99

SUMP PIT PLAN

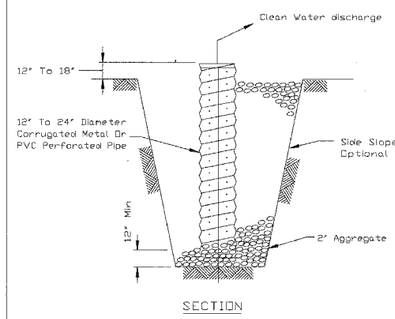

NOTES:
1. Pit dimensions are optional.
2. The standpipe will be constructed by perforating a 12"-24" diameter corrugated metal or PVC pipe.
3. A base of 2" aggregate will be placed in the pit to a minimum depth of 12". After installing the standpipe, the pit surrounding the standpipe will then be backfilled with 2" aggregate.
4. The standpipe will extend 12" to 18" above the lip of the pit.
5. If discharge will be pumped directly to a storm drainage system, the standpipe will be wrapped with filter fabric before installation.
6. If desired, 1/4"-1/2" hardware cloth may be placed around the standpipe prior to attaching the filter fabric. This will increase the rate of water seepage into the pipe.

REFERENCE
Project ____
Designed ____ Date ____
Checked ____ Date ____
Approved ____ Date ____

NRCS Natural Resources Conservation Service

STANDARD DWG. NO. IL-650
SHEET 1 OF 1
DATE 8-11-94

ROCK CHECK DAM - COARSE AGGREGATE

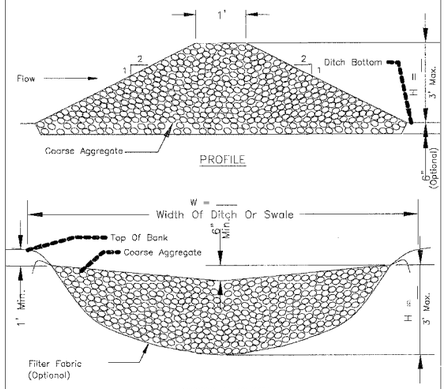

NOTES:
1. Filter fabric shall meet the requirements of material specification 592 GEOTEXTILE, Table 1 or 2, Class I, II, or IV and shall be placed over the cleared area prior to the placing of rock.
2. Coarse aggregate shall meet one of the following IDOT gradations, CA-1, CA-2, CA-3, or CA-4 and be placed according to construction specification 25 ROCKFILL using placement Method 1 and Class III compaction.
3. For added stability, the base of the dam may be keyed 6 inches into the soil.
4. See plans for spacing of dams and H dimensions.
5. Drainage area to each dam shall be less than 2 acres.
6. Use ROCK CHECK DAM-RIPRAP IL-605R for drainage areas of 2 to 10 acres.

REFERENCE
Project ____
Designed ____ Date ____
Checked ____ Date ____
Approved ____ Date ____

NRCS Natural Resources Conservation Service

STANDARD DWG. NO. IL-605CA
SHEET 1 OF 1
DATE 1-29-99

EROSION BLANKET PLAN

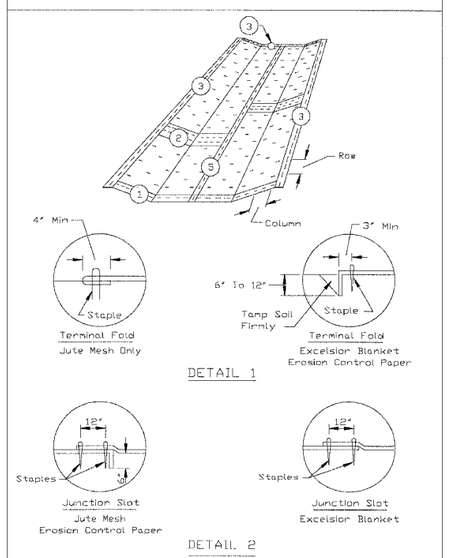

REFERENCE
Project ____
Designed ____ Date ____
Checked ____ Date ____
Approved ____ Date ____

NRCS Natural Resources Conservation Service

STANDARD DWG. NO. IL-530
SHEET 1 OF 2
DATE 3-24-94

EROSION BLANKET PLAN

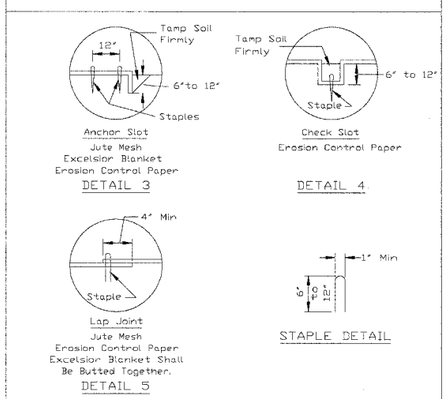

NOTES:
1. On erosion control paper, check slots, in ditch channel shall be spaced so that one occurs within each 50' on slopes of more than 4% and less than 6%. On slopes of 6% or more, they shall be spaced so that one occurs within each 25'.
2. Staples are to be placed alternately, in columns approximately 2' apart and in rows approximately 3' apart. Approximately 175 staples are required per 4'x 225' roll of material and 125 staples are required per 4'x 150' roll of material.
3. Erosion control material shall be placed loosely over ground surface. Do not stretch.
4. All terminal ends and transverse laps shall be stapled at approximately 12" intervals.

REFERENCE
Project ____
Designed ____ Date ____
Checked ____ Date ____
Approved ____ Date ____

NRCS Natural Resources Conservation Service

STANDARD DWG. NO. IL-530
SHEET 2 OF 2
DATE 3-1-95

INLET PROTECTION - FABRIC DROP PLAN

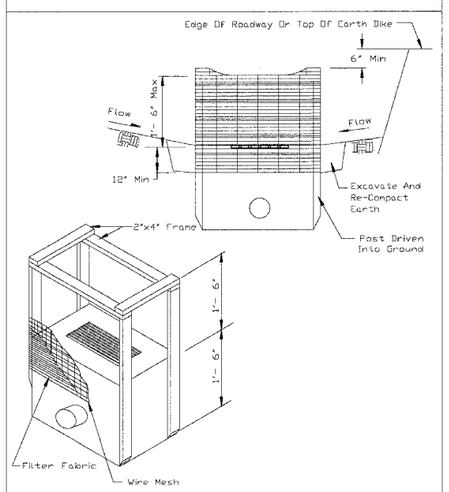

NOTES:
1. Filter fabric shall meet the requirement of material specification 592 GEOTEXTILE table 1 or 2, class I, with an EOS of at least 30 for nonwoven and 50 for woven.
2. The wire mesh shall have a maximum opening of at least 6 inches.
3. Limit drainage area to the inlet protection to 1 acre.

REFERENCE
Project ____
Designed ____ Date ____
Checked ____ Date ____
Approved ____ Date ____

NRCS Natural Resources Conservation Service

STANDARD DWG. NO. IL-560
SHEET 1 OF 1
DATE 6-29-93

REVISIONS	
NAME	DATE

ILLINOIS DEPARTMENT OF TRANSPORTATION
FAI ROUTE 55 (I-80 TO BLACK ROAD)
WIDENING AND RESURFACING

EROSION AND SEDIMENT CONTROL DETAILS

SCALE: NTS — DRAWN BY MRK
DATE 02/23/07 — CHECKED BY TKL

TENG — TENG & ASSOCIATES, INC. ENGINEERS/ARCHITECTS/PLANNERS CHICAGO, ILLINOIS

PLOT DATE = $DATE$
FILE NAME = $FILENAME$
PLOT SCALE = $SCALE$
USER NAME = $USER$

..\CD261\02D2LDGN..\B099\02D2LDGN
2:28:2007,18:01:47 VARSHNKZ
S:\DOCUMENT\82361560\CIVIL\DGN\ED0614D03.SHT