CONTRACT NO. 62895

F.A.I. RTE.	SECTION	COUNTY	TOTAL SHEETS	SHEET NO.
55	99 (1&2) WRS	WILL	334	111
STA.		TO STA.		
FED. ROAD DIST. NO.	ILLINOIS	FED. AID PROJECT		

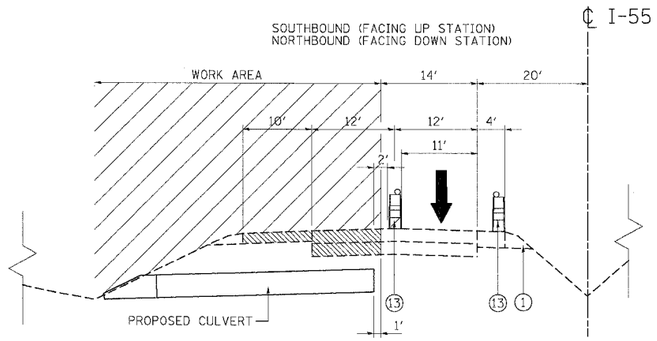

PRE-STAGE, PHASE I
PROP. STORM SEWER LATERALS CONSTRUCTION

STA. 240+90.04 TO STA. 402+65.07

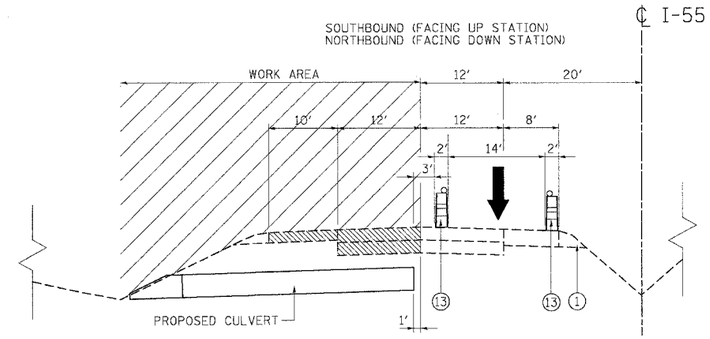

PRE-STAGE, PHASE I
PROP. STORM SEWER LATERALS CONSTRUCTION

STA. 195+00.00 TO STA. 240+90.04

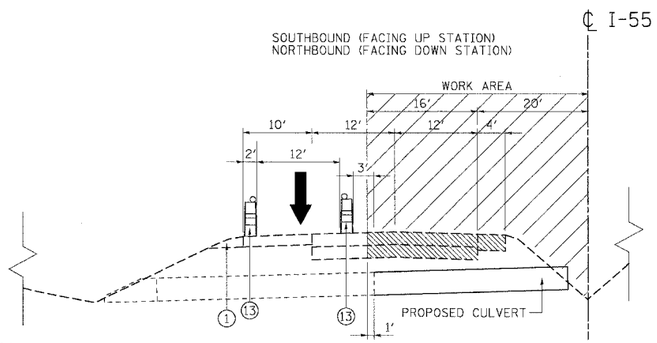

PRE-STAGE, PHASE II
PROP. STORM SEWER LATERALS CONSTRUCTION

STA. 240+90.04 TO STA. 402+65.07

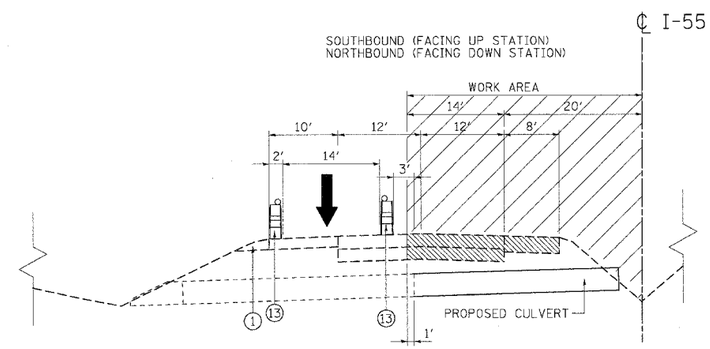

PRE-STAGE, PHASE II
PROP. STORM SEWER LATERALS CONSTRUCTION

STA. 195+00.00 TO STA. 240+90.04

LEGEND:

1. TEMPORARY ASPHALT WEDGE
2. PAVEMENT MARKING TAPE, TYPE III 4″
3. PAVEMENT MARKING TAPE, TYPE III 5″ SKIP-DASH
4. BITUMINOUS SURFACE REMOVAL, 3 1/2″
5. POLYMERIZED HOT-MIX ASPHALT BINDER COURSE, SMA 1 3/4″
6. AGGREGATE SUBGRADE, 12″
7. HOT-MIX ASPHALT BASE COURSE
8. TRENCH BACKFILL
9. POLYMERIZED HOT-MIX ASPHALT SURFACE COURSE, SMA 1 3/4″
10. STORM SEWER
11. BARRIER BASE
12. CONCRETE BARRIER, DOUBLE FACE
13. DRUMS W/ STEADY BURN LIGHTS @ 100′ C-C
14. CHECK DRUM W/ STEADY BURN LIGHTS @ 1000′ C-C
15. BITUMINOUS SURFACE REMOVAL (VARIABLE DEPTH)
16. HOT-MIX ASPHALT SURFACE COURSE, MIX D, N70, 2″
17. TEMPORARY CONCRETE BARRIER
18. VERTICAL PANEL W/ STEADY BURN LIGHTS @ 100′ C-C IN CURVES AND 200′ C-C ON TANGENTS
19. EPOXY PAVEMENT MARKING - LINE 4″
20. EPOXY PAVEMENT MARKING - LINE 5″ SKIP-DASH
21. PERMANENT THERMOPLASTIC PAVEMENT MARKING - LINE 4″

PAVEMENT PATCHING (AS DIRECTED BY THE ENGINEER)

BITUMINOUS SURFACE REMOVAL AND RESURFACING

WORK AREA

TRAFFIC FLOW

REVISIONS	
NAME	DATE

ILLINOIS DEPARTMENT OF TRANSPORTATION
FAI ROUTE 55 (I-80 TO BLACK ROAD)
WIDENING AND RESURFACING

STAGING AND TRAFFIC CONTROL
FAI 55 - TYPICAL SECTIONS
PRE-STAGE

SCALE: DRAWN BY JP

DATE 02/23/07 CHECKED BY DDH

TENG

TENG & ASSOCIATES, INC.
ENGINEERS/ARCHITECTS/PLANNERS
CHICAGO, ILLINOIS

PLOT DATE = $DATE$
FILE NAME = $FILEL$
PLOT SCALE = $SCALE$
USER NAME = $USER$

$$$$