Pole Number	Northing	Easting	Ground Elevation	Utilities on Pole	Survey Comments
505001	1957046.17	975627.76	897.00	(3) ComEd Electric, (2) WOW Comms, (2) Comcast CATV, (1) WOW FIBER	
505002	1957124.2	975462.95	893.93	(2) ComEd Electric, (1) WOW Comms, (1) Comcast CATV, (1) WOW FIBER	
505003	1957199.91	975303.02	892.61	(1) ComEd Electric, (1) WOW Comms, (2) Comcast CATV, (1) WOW FIBER	
5000	1957047.14	975628.166	896.94	(2) ComEd Electric, (1) WOW Comms, (1) Comcast CATV	Repeater attached
12450	1956991.47	975781.43	897.06	(2) ComEd Electric, (1) WOW Comms, (1) Comcast CATV	
12428	1956948.12	975873.85	896.76	(2) ComEd Electric, (1) WOW Comms, (1) Comcast CATV	
12390	1956932.58	975915.28	896.26	(2) ComEd Electric, (1) WOW Comms, (1) Comcast CATV	Street Light Attached
12080	1956849.3	976097.84	900.10	(2) ComEd Electric, (1) WOW Comms, (1) Comcast CATV	Traffic Elec Attachment
11947	1956786.82	976230.88	902.80	(1) ComEd Electric, (1) WOW Comms, (1) Comcast CATV	
5001	1956720.103	976386.859	902.59	(2) ComEd Electric, (1) WOW Comms, (1) Comcast CATV	
5002	1956661.097	976476.767	905.79	(1) ComEd Electric, (1) WOW Comms, (1) Comcast CATV	
5003	1956595.009	976621.853	906.75	(1) ComEd Electric, (1) WOW Comms, (1) Comcast CATV	ComEd Meter
11764	1956525.82	976770.43	907.20	(2) ComEd Electric, (1) WOW Comms, (1) Comcast CATV	Repeater attached
11569	1956465.61	976918.61	905.40	(2) ComEd Electric, (1) WOW Comms, (1) Comcast CATV	
505005	1956197.21	977806.6	895.09	(2) ComEd Electric, (1) WOW Comms, (1) Comcast CATV	
505008	1956127.3	978016.9	892.59	(2) ComEd Electric, (1) WOW Comms, (1) Comcast CATV	
505009	1956212.38	978059.56	892.69	(1) ComEd Electric	
505012	1956083.46	978152.56	891.73	(2) ComEd Electric, (1) WOW Comms, (1) Comcast CATV, (2) COMCAST FIBER	
11740	1956039.11	978328.2	891.40	(1) ComEd Electric, (1) WOW Comms, (1) Comcast CATV	
5004	1955979.12	978514.269	894.36	(1) ComEd Electric, (1) WOW Comms, (1) Comcast CATV	
5005	1955919.281	978693.552	898.33	(1) ComEd Electric, (1) WOW Comms, (1) Comcast CATV	

Pole Number	Northing	Easting	Ground Elevation	Utilities on Pole	Survey Comments
5006	1955863.544	978879.042	900.26	(1) ComEd Electric, (1) WOW Comms, (1) Comcast CATV	
11235	1955828.36	978971.83	900.80	(1) ComEd Electric, (1) WOW Comms, (1) Comcast CATV	
11453	1955554.96	979254.89	909.00	(1) ComEd Electric, (1) Comcast CATV	
5007	1955622.129	979437.698	899.81	(1) ComEd Electric, (1) Comcast CATV	Transformer, Box for antenna attachments
5008	1955638.929	979485.584	898.77	(1) ComEd Electric, (1) Comcast CATV	
5009	1955589.009	979638.875	893.30	(1) ComEd Electric, (1) Comcast CATV	
13078	1955473.63	979775.3	895.80	(1) ComEd Electric, (1) WOW Comms, (1) Comcast CATV, (1) MCI Fiber	
5010	1955428.399	979899.016	890.68	(1) ComEd Electric, (1) WOW Comms, (1) Comcast CATV, (1) MCI Fiber	
505016	1955371.4	980050.99	879.02	(1) ComEd Electric, (1) WOW Comms, (1) Comcast CATV, (1) COMCAST Fiber	
505017	1955317.16	980193.49	871.28	(1) ComEd Electric, (1) WOW Comms, (1) Comcast CATV, (1) COMCAST Fiber	
505019	1955728.53	982180.55	828.04	(1) ComEd Electric	
505020	1955726.53	982180.55	829.04	(2) ComEd Electric, (1) ASTOUND CATV, (1) AT&T Comms	
505024	1950805.89	990206.1	830.01	(2) ComEd Electric	
505025	1950805.08	990420.14	827.14	(1) ComEd Electric	
505026	1950820.44	990596.85	824.52	(1) ComEd Electric	
505027	1950811.27	990766.38	820.27	(1) ComEd Electric	
505028	1950800.07	990944.35	821.51	(1) ComEd Electric	
505029	1950790.31	991137.96	826.63	(1) ComEd Electric	
505030	1950780.73	991304.89	825.03	(1) ComEd Electric	
505031	19507667.63	991478.2	825.29	(1) ComEd Electric	
505032	1950758.72	991657.36	822.04	(1) ComEd Electric	
505033	1950752.36	991836.65	821.31	(1) ComEd Electric	
517035	1952349.53	987592.33	819.29	(2) ComEd Electric, (2) Comcast CATV (1) WOW Comms	

MODEL: SHEET
FILE NAME: Y:\jobs\257 - IDOT PTB198 Item 7 ASE\WO 446\CAD\SHEETS\257_446_PP table.dgn

Bravo Company ENGINEERING

AMERICAN SURVEYING & ENGINEERING, P.C.

DESIGNED -	JI
DRAWN -	JI
CHECKED -	TGB
DATE -	08/03/2023

STATE OF ILLINOIS
DEPARTMENT OF TRANSPORTATION

US-20 RANDALL RD TO SHALES PKWY
SUE STUDY

SHEET OF SHEETS STA. TO STA.

F.A.U. RTE.	SECTION	COUNTY	TOTAL SHEETS	SHEET NO.
345		KANE	18	16
		CONTRACT NO.		
FED. ROAD DIST. NO. 1	ILLINOIS	FED. AID PROJECT	P-91-008-19	

MODEL: Default
FILE NAME: pw://gfnet-pw.bentley.com:gfnet-pw-01/Documents/Projects/68096/Project Working/A_CADD/62U83-Contract1/Sheets/0162U83-sht-SUE01.dgn

USER NAME = jstarzyk	DESIGNED -	REVISED -	
	DRAWN -	REVISED -	
PLOT SCALE = 2.0000 ' / in.	CHECKED -	REVISED -	
PLOT DATE = 3/20/2024	DATE - 3/20/2024	REVISED -	

STATE OF ILLINOIS
DEPARTMENT OF TRANSPORTATION

US 20: GRACE STREET TO SHALES PARKWAY
SUE STUDY

SCALE: SHEET 17 OF 19 STA. TO STA.

F.A. RTE.	SECTION	COUNTY	TOTAL SHEETS	SHEET NO.
345	FAP 345 23 BRIDGE	COOK/KANE	379	101
		CONTRACT NO. 62U83		
	ILLINOIS	FED. AID PROJECT		

Pole Number	Northing	Easting	Ground Elevation	Utilities on Pole	Survey Comments
517034	1951154.75	990705.35	828.09	(1) ComEd Electric	
517033	1951096.91	990893.32	826.24	(1) ComEd Electric	
517032	1951042.82	991071.25	827.20	(3) ComEd Electric, (1) Comcast CATV, (1) WOW Comms, (1) AT&T Comms	
517031	1950097.89	991179.71	825.82	(4) ComEd Electric, (1) Comcast CATV, (1) WOW Comms, (1) AT&T Comms	
517030	195096.711	991303.59	826.80	(4) ComEd Electric, (1) Comcast CATV, (1) WOW Comms	
517028	1950959.89	991342.8	826.24	(3) ComEd Electric, (1) Comcast CATV, (1) WOW Comms	
517027	1950951.08	991380.84	825.73	(3) ComEd Electric, (2) Comcast CATV, (2) WOW Comms, (1) AT&T Comms	
517026	1950951.98	991412.31	823.14	(3) ComEd Electric, (1) Comcast CATV, (1) WOW Comms, (1) AT&T Comms	
517025	1950950.13	991457.93	823.46	(3) ComEd Electric, (1) Comcast CATV, (1) WOW Comms, (1) AT&T Comms	
517024	1950948.64	991497.43	823.00	(3) ComEd Electric, (1) Comcast CATV, (1) WOW Comms, (1) AT&T Comms	
517023	1950946.78	991638.67	820.57	(4) ComEd Electric, (2) Comcast CATV, (2) WOW Comms, (2) AT&T Comms	
517022	1950927.33	991757.75	819.38	(4) ComEd Electric, (1) Comcast CATV, (1) WOW Comms, (1) AT&T Comms	
517021	1950919.33	991936.43	821.22	(3) ComEd Electric, (1) Comcast CATV, (1) WOW Comms, (2) AT&T Comms	
517020	1950916.13	992046.68	822.02	(6) ComEd Electric, (3) Comcast CATV, (1) WOW Comms, (2) AT&T Comms	
517019	1950911.71	992144.38	822.31	(5) ComEd ELectric, (3) Comcast CATV, (2) WOW Comms, (2) AT&T Comms	
517018	1950900.33	992241.59	821.43	(5) ComEd Electric, (3) Comcast CATV, (3) WOW Comms, (3) AT&T Comms	
517017	1950898.36	992332.02	819.75	(5) ComEd Electric, (1) Comcast CATV, (1) WOW Comms, (1) AT&T Comms	
517016	1950897.42	992484.61	817.53	(3) ComEd Electric, (1) Comcast CATV, (1) WOW Comms, (1) AT&T Comms	

Pole Number	Northing	Easting	Ground Elevation	Utilities on Pole	Survey Comments
517015	1950896.21	992572.36	820.36	(2) ComEd Electric, (1) Comcast CATV, (2) WOW Comms, (2) AT&T Comms	
517014	1950893.67	992673.81	821.41	(3) ComEd Electric, (1) Comcast CATV, (1) WOW Comms, (1) AT&T Comms	
517013	1950891.81	992722.18	821.81	(5) ComEd Electric, (1) Comcast CATV, (1) WOW Comms, (1) AT&T Comms	
517039	1950847.4	994915.34	755.24	(4) ComEd Electric, (1) Comcast CATV, (1) WOW Comms	
517012	1950839.56	995132.09	766.53	(1) AT&T Comms	
517011	1950837.63	995297.13	772.23	(3) AT&T Comms	
517010	1950832.97	995477.23	768.10	(3) AT&T Comms	
517009	1950829.92	995656.78	767.94	(2) AT&T Comms	
517008	1950825.6	995836.94	765.85	(1) AT&T Comms	
517007	1950822.03	996017.99	758.64	(3) AT&T Comms	
517006	1950818.79	996200.01	758.50	(2) AT&T Comms	
517005	1950814.14	996380.73	760.99	(3) AT&T Comms	
517004	1950810.06	996559.13	752.96	(2) AT&T Comms	
517003	1950805.53	996738.23	755.86	(2) AT&T Comms	
517002	1950800.76	996915.17	759.01	(1) AT&T Comms	
517001	1950794.9	997095.71	755.68	(1) AT&T Comms	
5021A	1950783.87	997865.49	755.62	(3) ComEd Electric going to homeowners	
5056	1950856.43	997780.66	757.29	(2) Single Phase ComEd Electric	
5058	1950754.68	997773.78	756.46	(8) 3 Phase, (4) Single Phase ComEd Electric, (1) Comcast CATV	
5061	1950660.19	997767.04	756.97	(1) Single Phase, (1) ComEd Bundle	Signage Attachment
5064	1950481.16	997751.86	753.64	(4) Single Phase, (2) 2 Phase, (1) 3 Phase ComEd Electric, (2) assumed AT&T Comms	
5011	1949708.869	1000834.098	739.52	(2) ComEd Electric	
5012	1949723.597	1000834.47	740.17	(1) ComEd Electric	

MODEL: SHEET
FILE NAME: Y:\jobs\257 - IDOT PTB198 Item 7 ASEWO 446\CAD\SHEETS\257_446_PP table.dgn

Bravo Company ENGINEERING

AMERICAN SURVEYING & ENGINEERING, P.C.

DESIGNED - JI
DRAWN - JI
CHECKED - TGB
DATE - 08/03/2023

STATE OF ILLINOIS
DEPARTMENT OF TRANSPORTATION

US-20 RANDALL RD TO SHALES PKWY
SUE STUDY

SHEET OF SHEETS STA. TO STA.

F.A.U. RTE.	SECTION	COUNTY	TOTAL SHEETS	SHEET NO.
345		KANE	18	17
		CONTRACT NO.		
FED. ROAD DIST. NO. 1	ILLINOIS	FED. AID PROJECT	P-91-008-19	

MODEL: Default
FILE NAME: pw://gfnet-pw.bentley.com:gfnet-pw-01/Documents/Projects/68096/Project Working/A_CADD/62U83-Contract1/Sheets/0162U83-sht-SUE01.dgn

USER NAME = jstarzyk	DESIGNED -	REVISED -
	DRAWN -	REVISED -
PLOT SCALE = 2.0000 ' / in.	CHECKED -	REVISED -
PLOT DATE = 3/20/2024	DATE - 3/20/2024	REVISED -

STATE OF ILLINOIS
DEPARTMENT OF TRANSPORTATION

US 20: GRACE STREET TO SHALES PARKWAY
SUE STUDY

SCALE: SHEET 18 OF 19 STA. TO STA.

F.A. RTE.	SECTION	COUNTY	TOTAL SHEETS	SHEET NO.
345	FAP 345 23 BRIDGE	COOK/KANE	379	102
		CONTRACT NO. 62U83		
	ILLINOIS	FED. AID PROJECT		

Pole Number	Northing	Easting	Ground Elevation	Utilities on Pole	Survey Comments
5013	1949743.312	1000834.287	739.39	(1) ComEd Electric	
7577	1950139.066	1000826.293	755.34	(1) ComEd Electric	
7593	1950038.15	1000218.024	707.18	(2) ComEd Electric	Street Light Attached
10469	1949794.16	1000190.95	706.90	(3) ComEd Electric	
7586	1949876.006	1000195.112	705.22	(2) ComEd Electric	Street Light Attached
5014	1950152.173	1001297.012	761.14	(1) ComEd Electric, (1) WOW Comms, (1) Comcast CATV	Signage attached
10382	1950045.58	1001831.9	737.00	(3) ComEd Electric, (1) WOW Comms, (1) Comcast CATV	
5015	1950108.29	1002497.46	735.60	(1) ComEd Electric	
5016	1950153.957	1001829.189	742.90	(2) ComEd Electric, (1) WOW Comms, (1) Comcast CATV	3 Transformers attached
10371	1949868.79	1001834.64	731.80	(2) ComEd Electric, (1) WOW Comms, (1) Comcast CATV	
5017	1949872.445	1001543.782	741.87	(1) ComEd Electric, (1) Comcast CATV	
5018	1949875.86	1001681.482	735.31	(1) ComEd Electric, (1) Comcast CATV	
5019	1949815.885	1001835.099	730.82	(3) ComEd Electric, (1) WOW Comms, (1) Comcast CATV	
5020	1949874.994	1001882.885	731.68	(1) ComEd Electric	Signage and Street Light Attached
5021	1949892.037	1002208.876	730.79	(3) ComEd Electric, (2) WOW Comms	
5022	1949884.315	1002499.014	731.00	(3) ComEd Electric	Signage and Street Light Attached
5023	1949851.219	1002880.459	735.57	(3) ComEd Electric, (2) AT&T Comms, (3) Comcast CATV	
5024	1949865.895	1003262.846	742.42	(2) ComEd Electric, (1) WOW Comms, (1) Comcast CATV	
5025	1949800.149	1002884.013	734.38	(1) ComEd Electric, (2) AT&T Comms, (1) Comcast CATV ,(1) WOW Comms	
5026	1949797.059	1002922.091	734.34	(2) AT&T Comms	
10136	1949787.89	1002503.28	731.50	(1) ComEd Electric, (2) AT&T Comms, (1) Comcast ,(1) WOW Comms	

Pole Number	Northing	Easting	Ground Elevation	Utilities on Pole	Survey Comments
686	1950897.16	1006845.09	750.39	(3) ComEd Electric, (1) AT&T Comms, (1) Comcast CATV	
687	1951012.03	1006850.05	744.51	(2) ComEd Electric, (1) WOW Fiber, (1) Comcast CATV	
688	1951079.43	1006735.69	747.51	(2) ComEd Electric, (1) WOW Fiber, (1) Comcast CATV, (1) Unknown Fiber	
689	1951146.92	1006629.42	747.86	(2) ComEd Electric, (1) WOW Fiber, (1) Comcast CATV, (1) Unknown Fiber	

MODEL: SHEET
FILE NAME: V:\jobs\257 - IDOT PTB198 Item 7 ASEWO 446\CADSHEETS\257_446_PP table.dgn

Bravo Company ENGINEERING

AMERICAN SURVEYING & ENGINEERING, P.C.

DESIGNED -	JI
DRAWN -	JI
CHECKED -	TGB
DATE -	08/03/2023

STATE OF ILLINOIS
DEPARTMENT OF TRANSPORTATION

US-20 RANDALL RD TO SHALES PKWY
SUE STUDY

SHEET OF SHEETS STA. TO STA.

F.A.U. RTE.	SECTION	COUNTY	TOTAL SHEETS	SHEET NO.
345		KANE	18	18
		CONTRACT NO.		
FED. ROAD DIST. NO. 1	ILLINOIS	FED. AID PROJECT	P-91-008-19	

MODEL: Default
FILE NAME: pw://gfnas-pw.bentley.com:gfnet-pw-01/Documents/Projects/68096/Project Working/A CADD/62U83-Contract1/Sheets/D162U83-sn-SUE01.dgn

USER NAME = jstarzyk	DESIGNED -	REVISED -
	DRAWN -	REVISED -
PLOT SCALE = 2.0000 ' / in.	CHECKED -	REVISED -
PLOT DATE = 3/20/2024	DATE - 3/20/2024	REVISED -

STATE OF ILLINOIS
DEPARTMENT OF TRANSPORTATION

US 20: GRACE STREET TO SHALES PARKWAY
SUE STUDY

SCALE: SHEET 19 OF 19 STA. TO STA.

F.A. RTE.	SECTION	COUNTY	TOTAL SHEETS	SHEET NO.
345	FAP 345 23 BRIDGE	COOK/KANE	379	103
		CONTRACT NO. 62U83		
	ILLINOIS	FED. AID PROJECT		

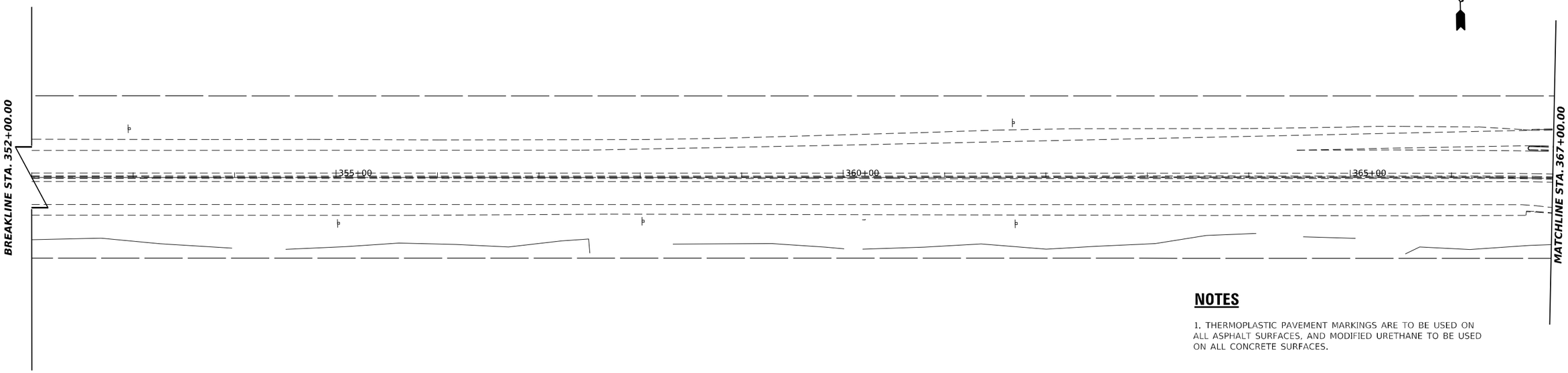

NOTES

1. THERMOPLASTIC PAVEMENT MARKINGS ARE TO BE USED ON ALL ASPHALT SURFACES, AND MODIFIED URETHANE TO BE USED ON ALL CONCRETE SURFACES.

PAVEMENT MARKING LEGEND

1. THERMOPLASTIC PAVEMENT MARKING - LINE 4" (SOLID WHITE) (78000200)
2. THERMOPLASTIC PAVEMENT MARKING - LINE 4" (SOLID YELLOW) (78000200)
4. THERMOPLASTIC PAVEMENT MARKING - LINE 8" (SOLID WHITE) (78000500)
6. THERMOPLASTIC PAVEMENT MARKING - LINE 12" (10' SPACING CHEVRON WHITE) (78000600)
9. THERMOPLASTIC PAVEMENT MARKING - LINE 5" (10' DASH, 30' SKIP WHITE) (78000300)

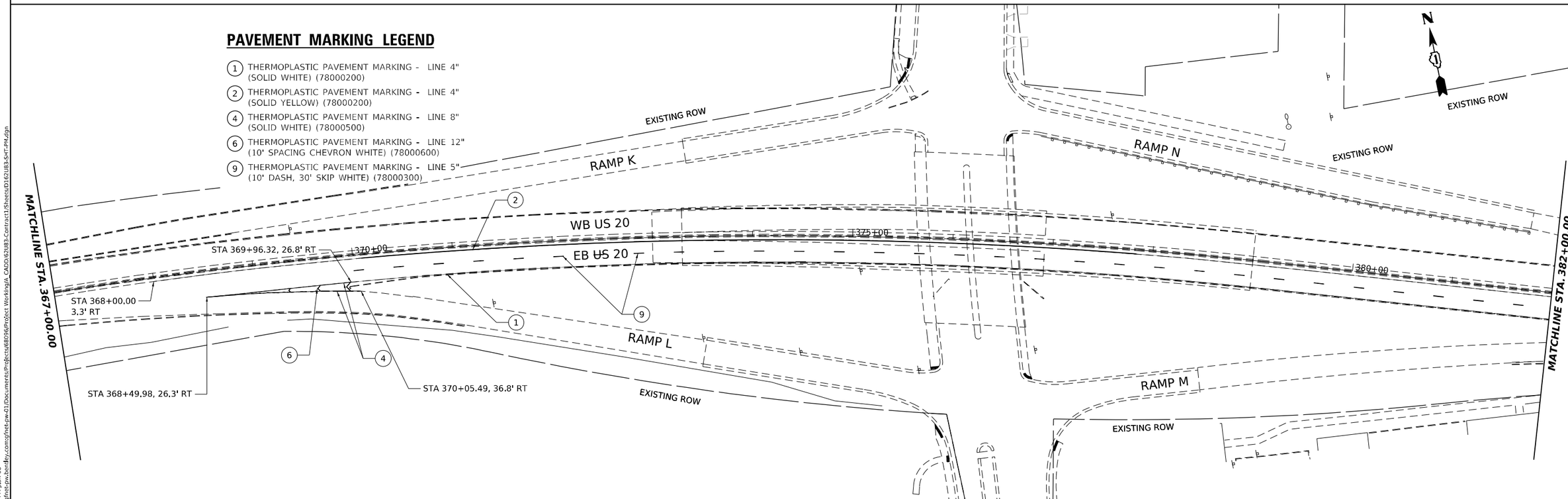

CERA	USER NAME = jstarzyk	DESIGNED - GY	REVISED -	STATE OF ILLINOIS DEPARTMENT OF TRANSPORTATION	US–20 RANDALL RD TO SHALES PKWY PAVEMENT MARKING PLAN	F.A.P RTE.	SECTION	COUNTY	TOTAL SHEETS / SHEET NO.
		DRAWN - GY	REVISED -			345	FAP 345 23 BRIDGE	COOK/KANE	379 / 104
	PLOT SCALE = 0.16666685 ' / in.	CHECKED -	REVISED -			CONTRACT NO. 62U83			
	PLOT DATE = 3/20/2024	DATE - 3/20/2024	REVISED -		SCALE: 1"=50' SHEET 1 OF 5 SHEETS STA. 352+00 TO STA. 382+00	ILLINOIS	FED. AID PROJECT		

MODEL: US20 Sht PM pln-08
FILE NAME: pw://gfnet-pw.bentley.com:gfnet-pw-01/Documents/Projects/68096/Project Working/A CADD/62U83-Contract1/Sheets/D162U83-SHT-PM.dgn

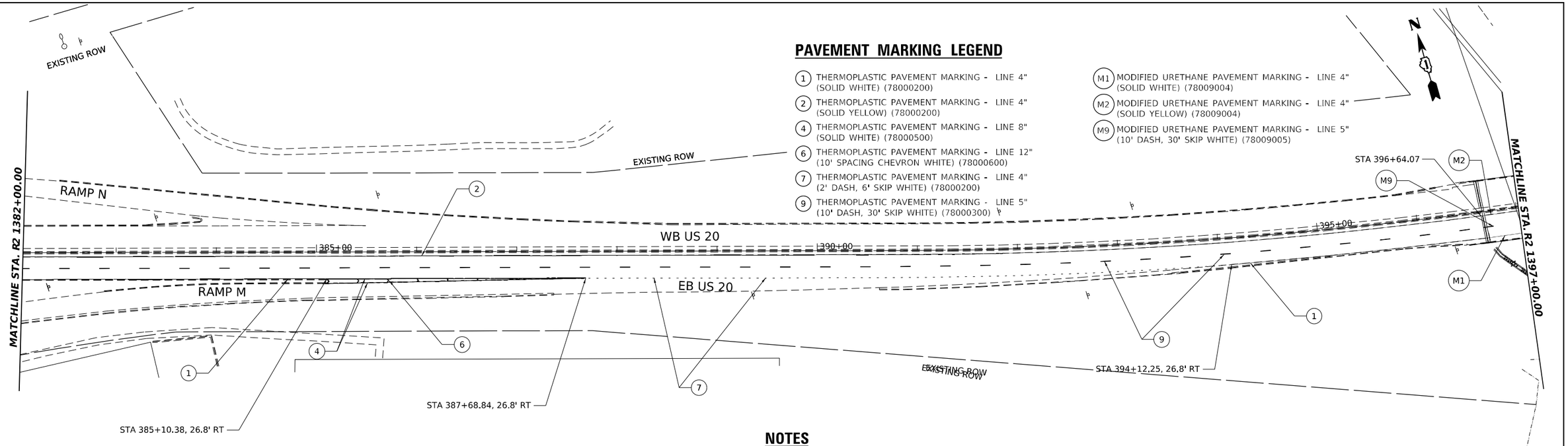

PAVEMENT MARKING LEGEND

- (1) THERMOPLASTIC PAVEMENT MARKING - LINE 4" (SOLID WHITE) (78000200)
- (2) THERMOPLASTIC PAVEMENT MARKING - LINE 4" (SOLID YELLOW) (78000200)
- (4) THERMOPLASTIC PAVEMENT MARKING - LINE 8" (SOLID WHITE) (78000500)
- (6) THERMOPLASTIC PAVEMENT MARKING - LINE 12" (10' SPACING CHEVRON WHITE) (78000600)
- (7) THERMOPLASTIC PAVEMENT MARKING - LINE 4" (2' DASH, 6' SKIP WHITE) (78000200)
- (9) THERMOPLASTIC PAVEMENT MARKING - LINE 5" (10' DASH, 30' SKIP WHITE) (78000300)
- (M1) MODIFIED URETHANE PAVEMENT MARKING - LINE 4" (SOLID WHITE) (78009004)
- (M2) MODIFIED URETHANE PAVEMENT MARKING - LINE 4" (SOLID YELLOW) (78009004)
- (M9) MODIFIED URETHANE PAVEMENT MARKING - LINE 5" (10' DASH, 30' SKIP WHITE) (78009005)

NOTES

1. THERMOPLASTIC PAVEMENT MARKINGS ARE TO BE USED ON ALL ASPHALT SURFACES, AND MODIFIED URETHANE TO BE USED ON ALL CONCRETE SURFACES.

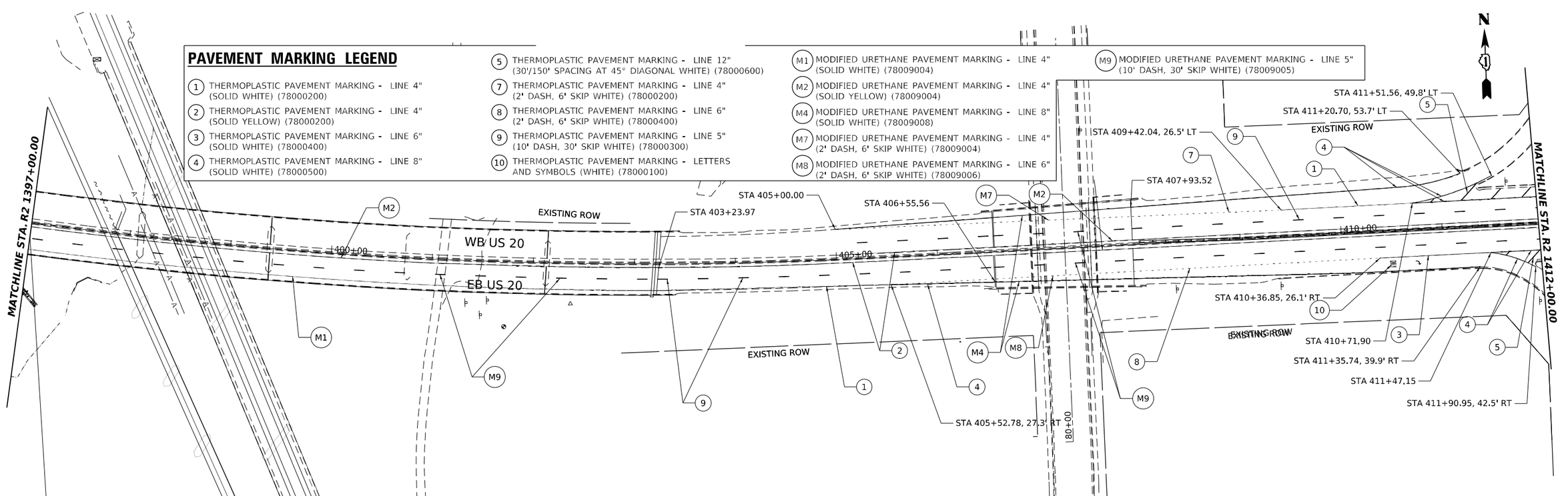

PAVEMENT MARKING LEGEND

- (1) THERMOPLASTIC PAVEMENT MARKING - LINE 4" (SOLID WHITE) (78000200)
- (2) THERMOPLASTIC PAVEMENT MARKING - LINE 4" (SOLID YELLOW) (78000200)
- (3) THERMOPLASTIC PAVEMENT MARKING - LINE 6" (SOLID WHITE) (78000400)
- (4) THERMOPLASTIC PAVEMENT MARKING - LINE 8" (SOLID WHITE) (78000500)
- (5) THERMOPLASTIC PAVEMENT MARKING - LINE 12" (30'/150' SPACING AT 45° DIAGONAL WHITE) (78000600)
- (7) THERMOPLASTIC PAVEMENT MARKING - LINE 4" (2' DASH, 6' SKIP WHITE) (78000200)
- (8) THERMOPLASTIC PAVEMENT MARKING - LINE 6" (2' DASH, 6' SKIP WHITE) (78000400)
- (9) THERMOPLASTIC PAVEMENT MARKING - LINE 5" (10' DASH, 30' SKIP WHITE) (78000300)
- (10) THERMOPLASTIC PAVEMENT MARKING - LETTERS AND SYMBOLS (WHITE) (78000100)
- (M1) MODIFIED URETHANE PAVEMENT MARKING - LINE 4" (SOLID WHITE) (78009004)
- (M2) MODIFIED URETHANE PAVEMENT MARKING - LINE 4" (SOLID YELLOW) (78009004)
- (M4) MODIFIED URETHANE PAVEMENT MARKING - LINE 8" (SOLID WHITE) (78009008)
- (M7) MODIFIED URETHANE PAVEMENT MARKING - LINE 4" (2' DASH, 6' SKIP WHITE) (78009004)
- (M8) MODIFIED URETHANE PAVEMENT MARKING - LINE 6" (2' DASH, 6' SKIP WHITE) (78009006)
- (M9) MODIFIED URETHANE PAVEMENT MARKING - LINE 5" (10' DASH, 30' SKIP WHITE) (78009005)

MODEL: US20 Sht PM plan-09
FILE NAME: pw://gfnet-pw.bentley.com:gfnet-pw-01/Documents/Projects/68096/Project Working/A_CADD/62U83-Contract1/Sheets/D162U83-SHT-PM.dgn

CERA

USER NAME = jstarzyk	DESIGNED - GY	REVISED -	
	DRAWN - GY	REVISED -	
PLOT SCALE = 0.16666685 ' / in.	CHECKED -	REVISED -	
PLOT DATE = 3/20/2024	DATE - 3/20/2024	REVISED -	

STATE OF ILLINOIS
DEPARTMENT OF TRANSPORTATION

US-20 RANDALL RD TO SHALES PKWY
PAVEMENT MARKING PLAN

SCALE: 1"=50' | SHEET 2 OF 5 SHEETS | STA. 1382+00 TO STA. 1412+00

F.A.P RTE.	SECTION	COUNTY	TOTAL SHEETS	SHEET NO.
345	FAP 345 23 BRIDGE	COOK/KANE	379	105

CONTRACT NO. 62U83

ILLINOIS | FED. AID PROJECT

PAVEMENT MARKING LEGEND

1. THERMOPLASTIC PAVEMENT MARKING - LINE 4" (SOLID WHITE) (78000200)
2. THERMOPLASTIC PAVEMENT MARKING - LINE 4" (SOLID YELLOW) (78000200)
3. THERMOPLASTIC PAVEMENT MARKING - LINE 6" (SOLID WHITE) (78000400)
4. THERMOPLASTIC PAVEMENT MARKING - LINE 8" (SOLID WHITE) (78000500)
5. THERMOPLASTIC PAVEMENT MARKING - LINE 12" (30'/150' SPACING AT 45° DIAGONAL WHITE) (78000600)
6. THERMOPLASTIC PAVEMENT MARKING - LINE 12" (10' SPACING CHEVRON WHITE) (78000600)
7. THERMOPLASTIC PAVEMENT MARKING - LINE 4" (2' DASH, 6' SKIP WHITE) (78000200)
8. THERMOPLASTIC PAVEMENT MARKING - LINE 6" (2' DASH, 6' SKIP WHITE) (78000400)
9. THERMOPLASTIC PAVEMENT MARKING - LINE 5" (10' DASH, 30' SKIP WHITE) (78000300)
10. THERMOPLASTIC PAVEMENT MARKING - LETTERS AND SYMBOLS (WHITE) (78000100)

M1. MODIFIED URETHANE PAVEMENT MARKING - LINE 4" (SOLID WHITE) (78009004)
M2. MODIFIED URETHANE PAVEMENT MARKING - LINE 4" (SOLID YELLOW) (78009004)
M3. MODIFIED URETHANE PAVEMENT MARKING - LINE 6" (SOLID WHITE) (78009006)
M4. MODIFIED URETHANE PAVEMENT MARKING - LINE 8" (SOLID WHITE) (78009008)
M5. MODIFIED URETHANE PAVEMENT MARKING - LINE 12" (150' SPACING AT 45° DIAGONAL WHITE) (78009008)
M7. MODIFIED URETHANE PAVEMENT MARKING - LINE 4" (2' DASH, 6' SKIP WHITE) (78009004)
M8. MODIFIED URETHANE PAVEMENT MARKING - LINE 6" (2' DASH, 6' SKIP WHITE) (78009006)
M9. MODIFIED URETHANE PAVEMENT MARKING - LINE 5" (10' DASH, 30' SKIP WHITE) (78009005)
M10. MODIFIED URETHANE PAVEMENT MARKING - LETTERS AND SYMBOLS (WHITE) (78009000)

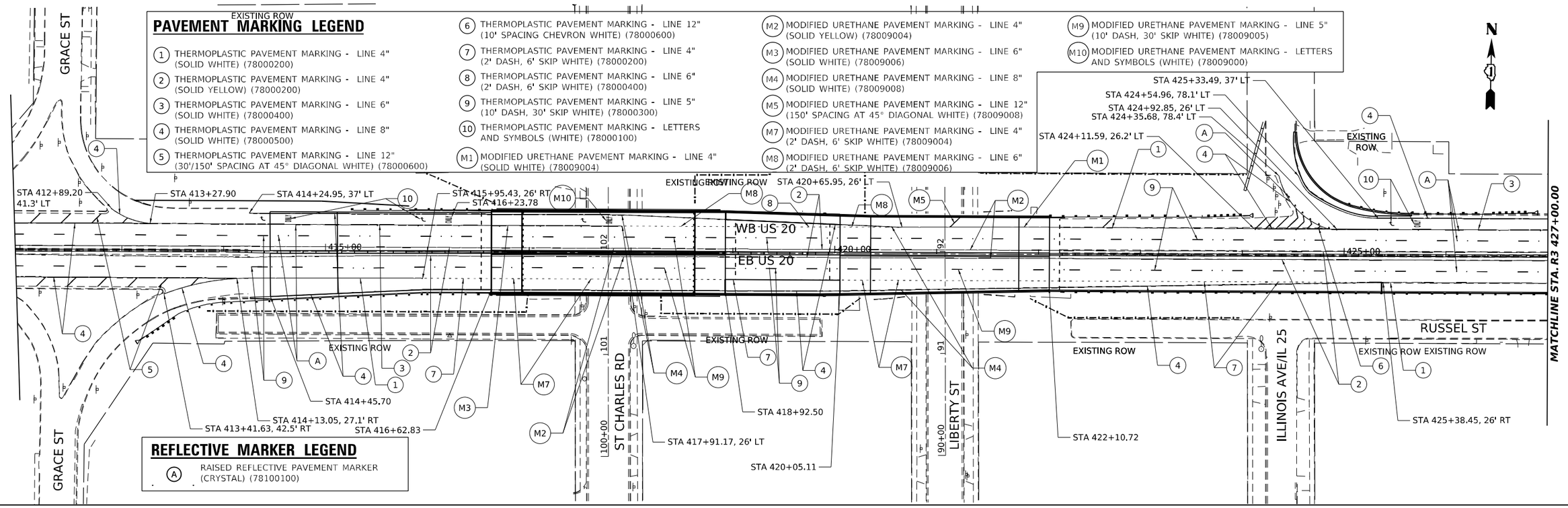

REFLECTIVE MARKER LEGEND

(A) RAISED REFLECTIVE PAVEMENT MARKER (CRYSTAL) (78100100)

PAVEMENT MARKING LEGEND

1. THERMOPLASTIC PAVEMENT MARKING - LINE 4" (SOLID WHITE) (78000200)
2. THERMOPLASTIC PAVEMENT MARKING - LINE 4" (SOLID YELLOW) (78000200)
3. THERMOPLASTIC PAVEMENT MARKING - LINE 6" (SOLID WHITE) (78000400)
4. THERMOPLASTIC PAVEMENT MARKING - LINE 8" (SOLID WHITE) (78000500)
5. THERMOPLASTIC PAVEMENT MARKING - LINE 12" (30'/150' SPACING AT 45° DIAGONAL WHITE) (78000600)
7. THERMOPLASTIC PAVEMENT MARKING - LINE 4" (2' DASH, 6' SKIP WHITE) (78000200)
8. THERMOPLASTIC PAVEMENT MARKING - LINE 6" (2' DASH, 6' SKIP WHITE) (78000400)
9. THERMOPLASTIC PAVEMENT MARKING - LINE 5" (10' DASH, 30' SKIP WHITE) (78000300)
10. THERMOPLASTIC PAVEMENT MARKING - LETTERS AND SYMBOLS (WHITE) (78000100)

M1. MODIFIED URETHANE PAVEMENT MARKING - LINE 4" (SOLID WHITE) (78009004)
M2. MODIFIED URETHANE PAVEMENT MARKING - LINE 4" (SOLID YELLOW) (78009004)
M4. MODIFIED URETHANE PAVEMENT MARKING - LINE 8" (SOLID WHITE) (78009008)
M5. MODIFIED URETHANE PAVEMENT MARKING - LINE 12" (150' SPACING AT 45° DIAGONAL WHITE) (78009012)
M7. MODIFIED URETHANE PAVEMENT MARKING - LINE 4" (2' DASH, 6' SKIP WHITE) (78009004)
M9. MODIFIED URETHANE PAVEMENT MARKING - LINE 5" (10' DASH, 30' SKIP WHITE) (78009005)

NOTES

1. THERMOPLASTIC PAVEMENT MARKINGS ARE TO BE USED ON ALL ASPHALT SURFACES, AND MODIFIED URETHANE TO BE USED ON ALL CONCRETE SURFACES.

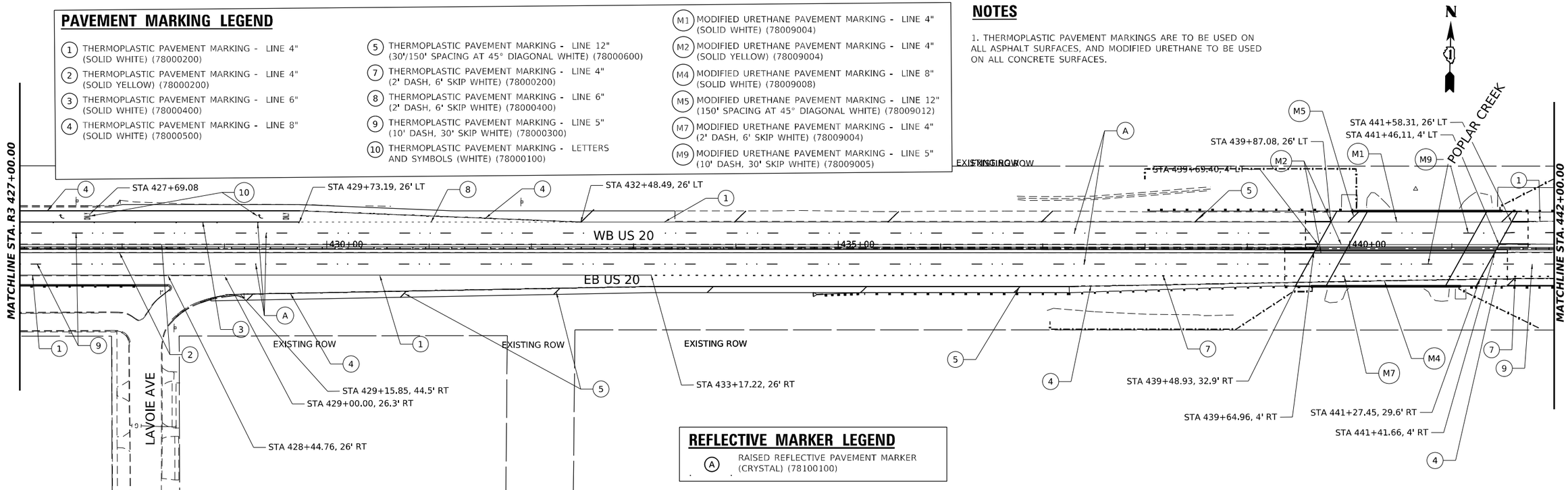

REFLECTIVE MARKER LEGEND

(A) RAISED REFLECTIVE PAVEMENT MARKER (CRYSTAL) (78100100)

USER NAME = jstarzyk	DESIGNED - GY	REVISED -	
	DRAWN - GY	REVISED -	
PLOT SCALE = 0.16666685 ' / in.	CHECKED -	REVISED -	
PLOT DATE = 3/20/2024	DATE - 3/20/2024	REVISED -	

STATE OF ILLINOIS
DEPARTMENT OF TRANSPORTATION

US-20 RANDALL RD TO SHALES PKWY
PAVEMENT MARKING PLAN

SCALE: 1"=50' | SHEET 3 OF 5 SHEETS | STA. 1412+00 TO STA. 442+00

F.A.P RTE.	SECTION	COUNTY	TOTAL SHEETS	SHEET NO.
345	FAP 345 23 BRIDGE	COOK/KANE	379	106
		CONTRACT NO. 62U83		
		ILLINOIS	FED. AID PROJECT	

PAVEMENT MARKING LEGEND

1. THERMOPLASTIC PAVEMENT MARKING - LINE 4" (SOLID WHITE) (78000200)
2. THERMOPLASTIC PAVEMENT MARKING - LINE 4" (SOLID YELLOW) (78000200)
4. THERMOPLASTIC PAVEMENT MARKING - LINE 8" (SOLID WHITE) (78000500)
5. THERMOPLASTIC PAVEMENT MARKING - LINE 12" (30'/150' SPACING AT 45° DIAGONAL WHITE) (78000600)
7. THERMOPLASTIC PAVEMENT MARKING - LINE 4" (2' DASH, 6' SKIP WHITE) (78000200)
9. THERMOPLASTIC PAVEMENT MARKING - LINE 5" (10' DASH, 30' SKIP WHITE) (78000300)

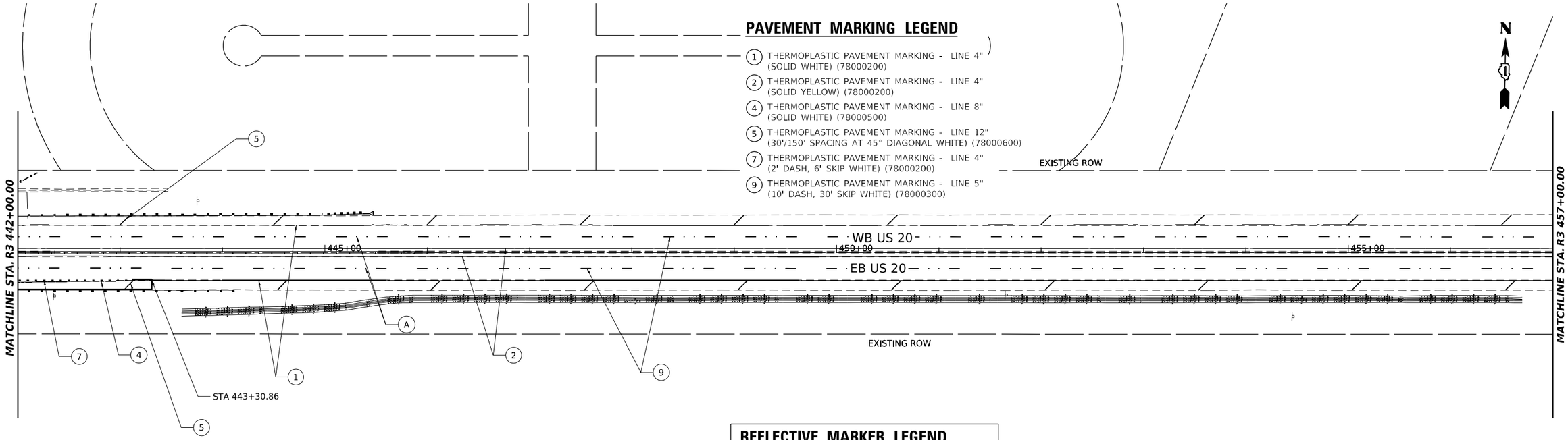

REFLECTIVE MARKER LEGEND

A. RAISED REFLECTIVE PAVEMENT MARKER (CRYSTAL) (78100100)

PAVEMENT MARKING LEGEND

1. THERMOPLASTIC PAVEMENT MARKING - LINE 4" (SOLID WHITE) (78000200)
2. THERMOPLASTIC PAVEMENT MARKING - LINE 4" (SOLID YELLOW) (78000200)
9. THERMOPLASTIC PAVEMENT MARKING - LINE 5" (10' DASH, 30' SKIP WHITE) (78000300)

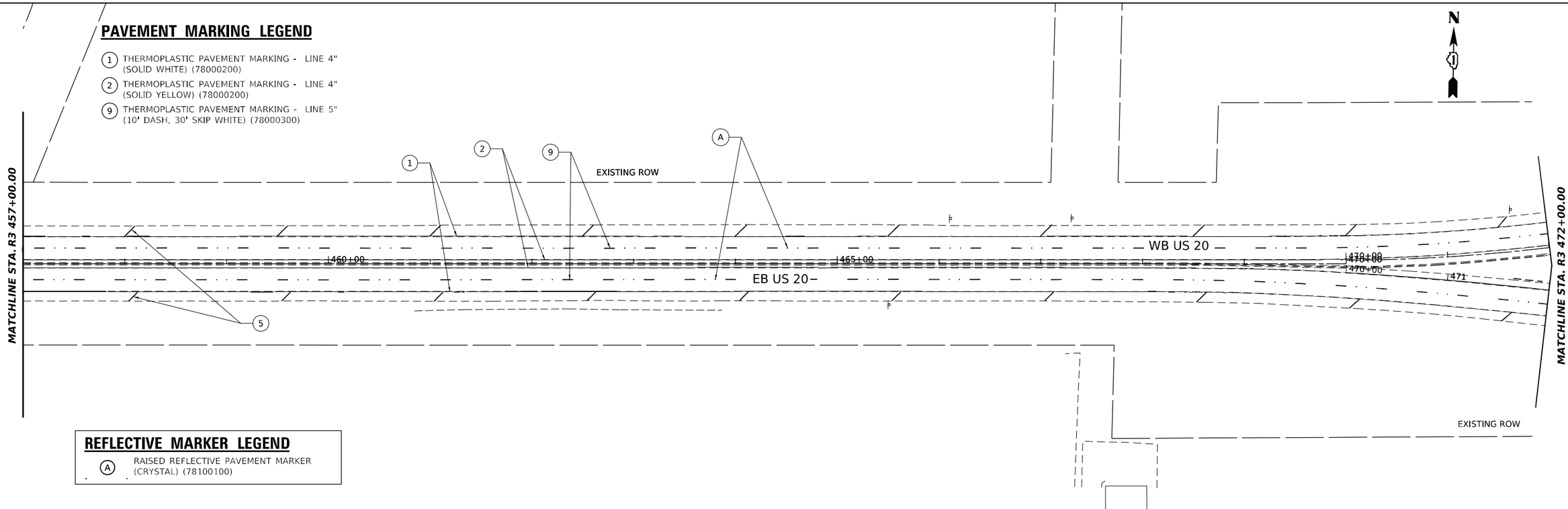

REFLECTIVE MARKER LEGEND

A. RAISED REFLECTIVE PAVEMENT MARKER (CRYSTAL) (78100100)

MODEL: US20 Sht PM plan-11
FILE NAME: pw://gfnet-pw.bentley.com:gfnet-pw-01/Documents/Projects/68096/Project Working/A CADD/62U83-Contract1/Sheets/D162U83-Sht-PM.dgn

USER NAME = jstarzyk	DESIGNED - GY	REVISED -	
	DRAWN - GY	REVISED -	
PLOT SCALE = 0.16666685 ' / in.	CHECKED -	REVISED -	
PLOT DATE = 3/20/2024	DATE - 3/20/2024	REVISED -	

STATE OF ILLINOIS
DEPARTMENT OF TRANSPORTATION

US-20 RANDALL RD TO SHALES PKWY
PAVEMENT MARKING PLAN

SCALE: 1"=50' | SHEET 4 OF 5 SHEETS | STA. 442+00 TO STA. 472+00

F.A.P RTE.	SECTION	COUNTY	TOTAL SHEETS	SHEET NO.
345	FAP 345 23 BRIDGE	COOK/KANE	379	107

CONTRACT NO. 62U83

ILLINOIS | FED. AID PROJECT

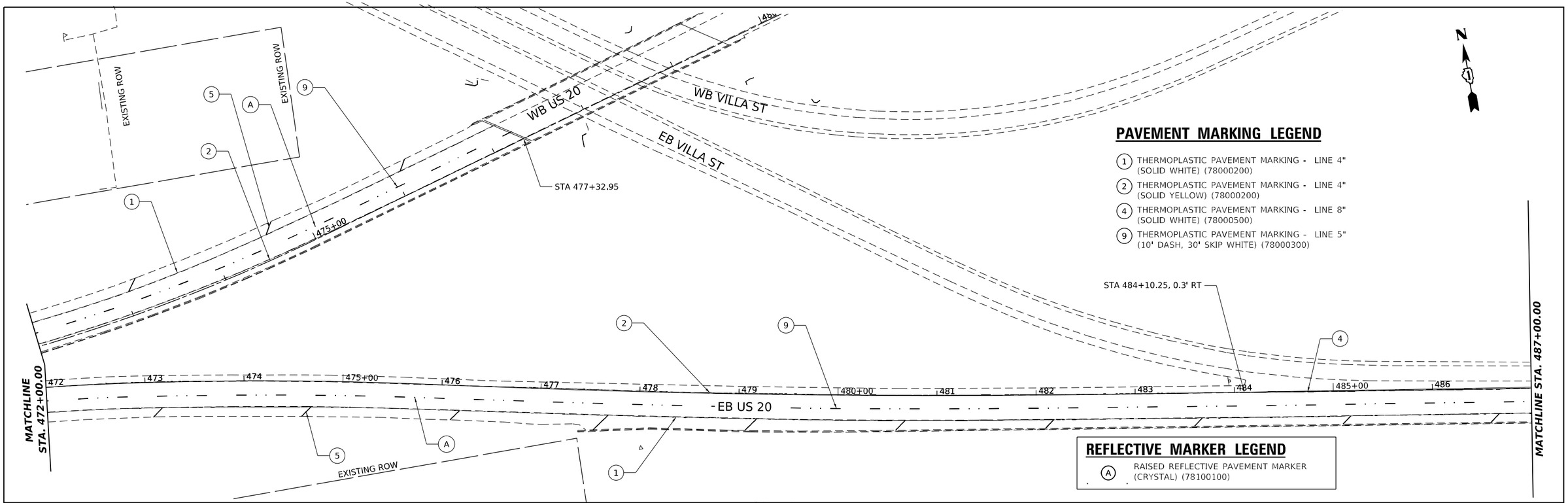

PAVEMENT MARKING LEGEND

1. THERMOPLASTIC PAVEMENT MARKING - LINE 4" (SOLID WHITE) (78000200)
2. THERMOPLASTIC PAVEMENT MARKING - LINE 4" (SOLID YELLOW) (78000200)
4. THERMOPLASTIC PAVEMENT MARKING - LINE 8" (SOLID WHITE) (78000500)
9. THERMOPLASTIC PAVEMENT MARKING - LINE 5" (10' DASH, 30' SKIP WHITE) (78000300)

REFLECTIVE MARKER LEGEND

A. RAISED REFLECTIVE PAVEMENT MARKER (CRYSTAL) (78100100)

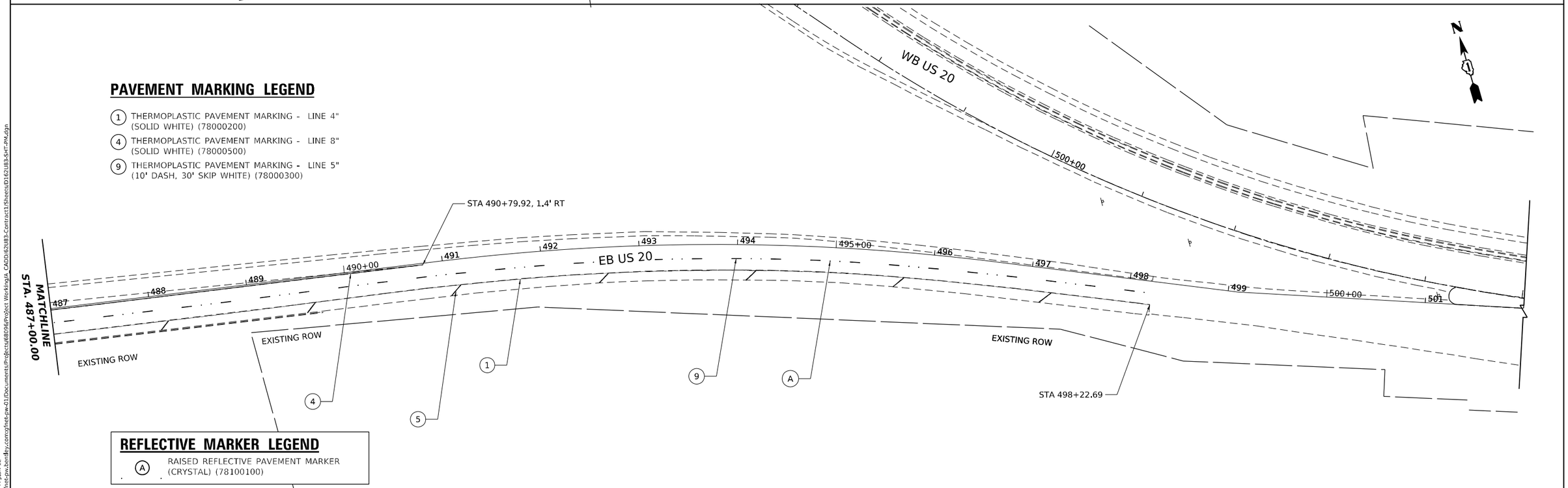

PAVEMENT MARKING LEGEND

1. THERMOPLASTIC PAVEMENT MARKING - LINE 4" (SOLID WHITE) (78000200)
4. THERMOPLASTIC PAVEMENT MARKING - LINE 8" (SOLID WHITE) (78000500)
9. THERMOPLASTIC PAVEMENT MARKING - LINE 5" (10' DASH, 30' SKIP WHITE) (78000300)

REFLECTIVE MARKER LEGEND

A. RAISED REFLECTIVE PAVEMENT MARKER (CRYSTAL) (78100100)

MODEL: US20 Sht PM pkln-12
FILE NAME: pw://gfnet-pw.bentley.com:gfnet-pw-01/Documents/Projects/68096/Project Working/A CADD/62U83-Contract1/Sheets/D162U83-SHT-PM.dgn

CERA

USER NAME = jstarzyk	DESIGNED -	REVISED -	
	DRAWN -	REVISED -	
PLOT SCALE = 0.16666685 ' / in.	CHECKED -	REVISED -	
PLOT DATE = 3/20/2024	DATE - 3/20/2024	REVISED -	

STATE OF ILLINOIS
DEPARTMENT OF TRANSPORTATION

US 20: GRACE STREET TO SHALES PARKWAY
PAVEMENT MARKING PLAN

SCALE: 1"=50' | SHEET 5 OF 5 SHEETS | STA. 472+00 TO STA. 498+23

F.A.P RTE.	SECTION	COUNTY	TOTAL SHEETS	SHEET NO.
345	FAP 345 23 BRIDGE	COOK/KANE	379	108

CONTRACT NO. 62U83

ILLINOIS | FED. AID PROJECT

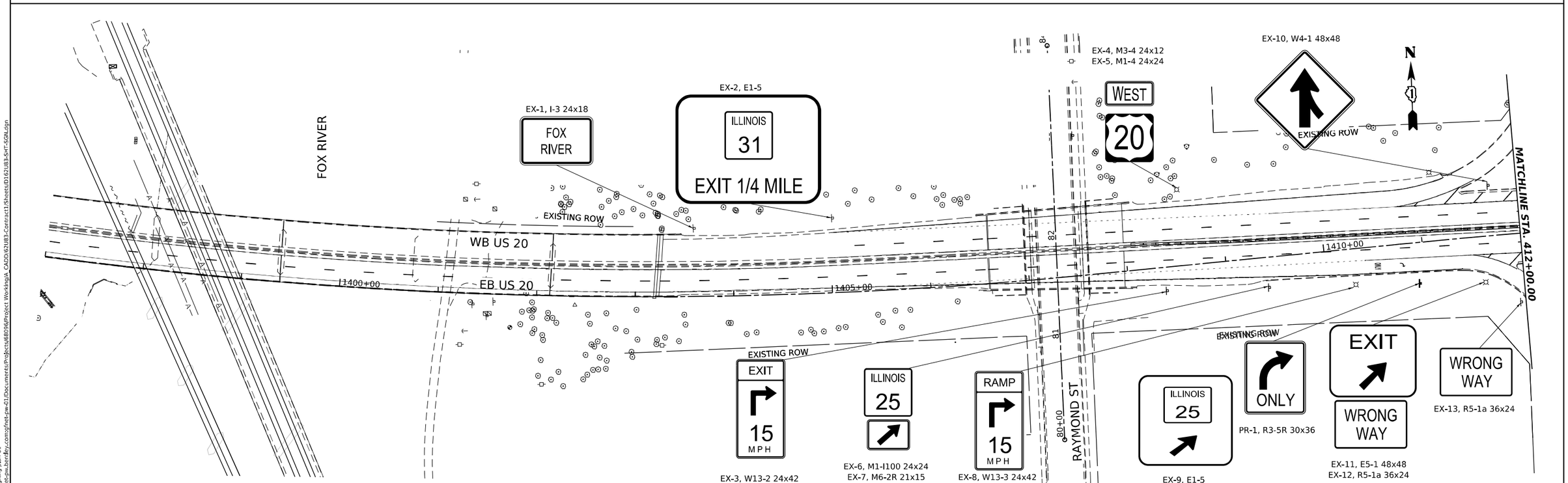

MODEL: US20 Sht Signing plan-01
FILE NAME: pw://gfnet-pw.bentley.com:gfnet-pw-01/Documents/Projects/68096/Project Working/A_CADD/62U83-Contract1/Sheets/D162U83-SHT-SGN.dgn

USER NAME = jstarzyk	DESIGNED - DE	REVISED -	
	DRAWN - DE	REVISED -	
PLOT SCALE = 0.16666685 ' / in.	CHECKED -	REVISED -	
PLOT DATE = 3/20/2024	DATE - 3/20/2024	REVISED -	

STATE OF ILLINOIS
DEPARTMENT OF TRANSPORTATION

US 20: GRACE STREET TO SHALES PARKWAY
SIGNING PLAN

SCALE: 1"=50' | SHEET 1 OF 3 SHEETS | STA. 397+00 TO STA. 412+00

F.A.P RTE.	SECTION	COUNTY	TOTAL SHEETS	SHEET NO.
345	FAP 345 23 BRIDGE	COOK/KANE	379	109

CONTRACT NO. 62U83

ILLINOIS | FED. AID PROJECT

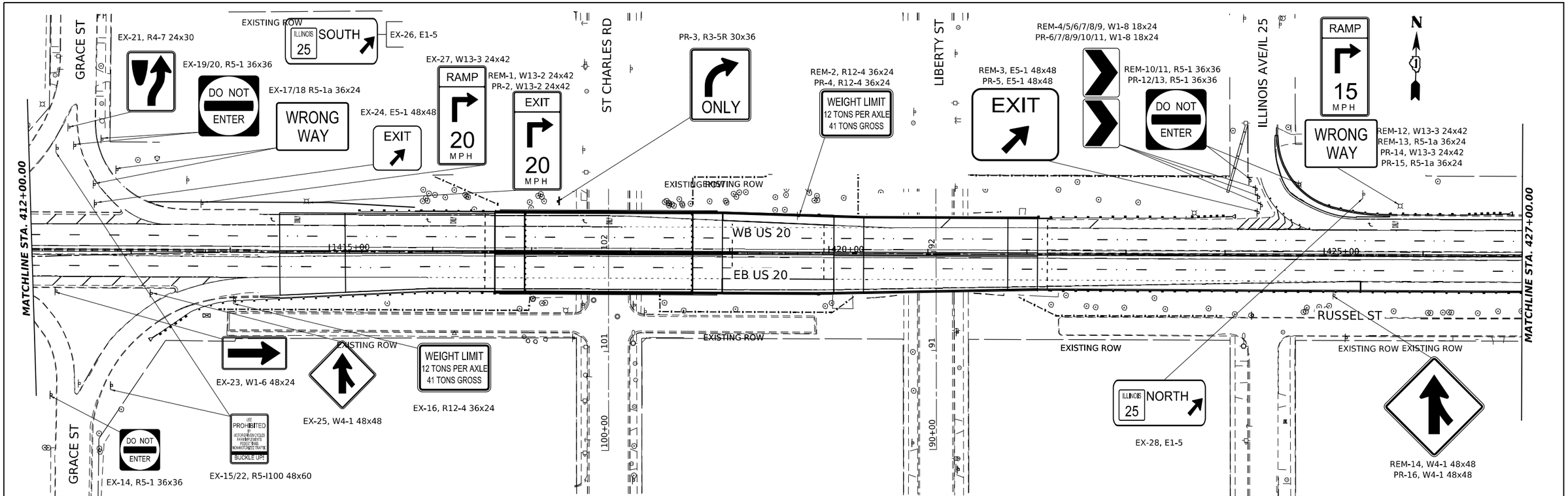

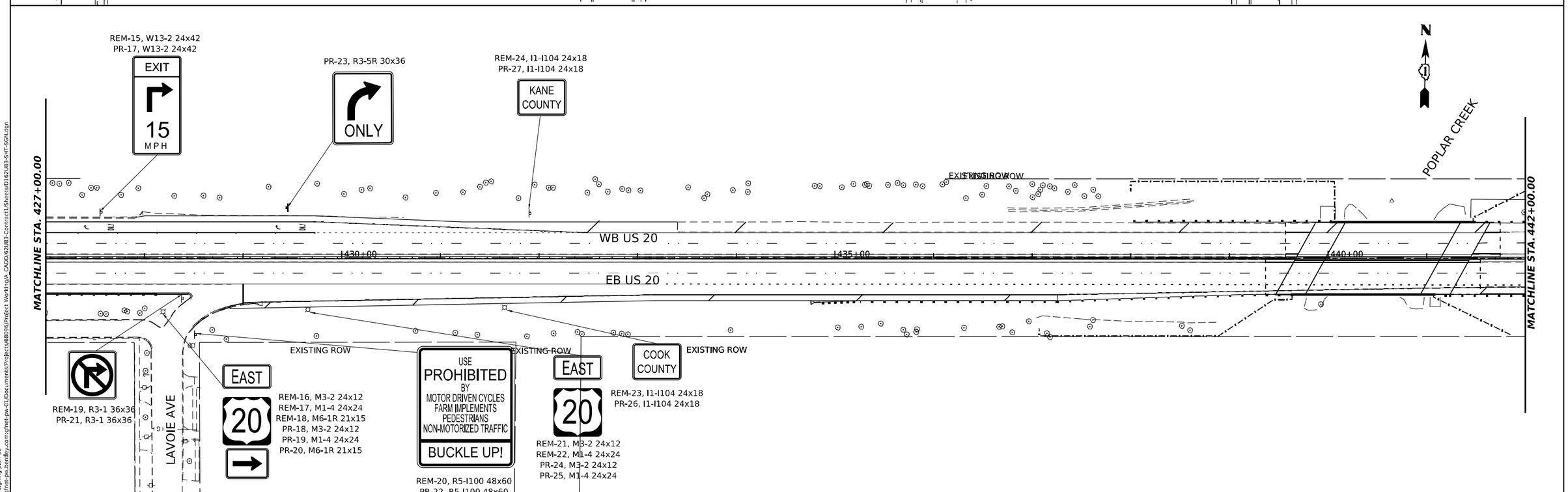

MODEL: US20 Sht Signing plan-02
FILE NAME: pw://gfnet-pw.bentley.com:gfnet-pw-01/Documents/Projects/68096/Project Working/A CADD/62U83-Contract1/Sheets/D162U83-SHT-SGN.dgn

USER NAME = jstarzyk	DESIGNED - DE	REVISED -	
	DRAWN - DE	REVISED -	
PLOT SCALE = 0.16666685 ' / in.	CHECKED -	REVISED -	
PLOT DATE = 3/20/2024	DATE - 3/20/2024	REVISED -	

STATE OF ILLINOIS
DEPARTMENT OF TRANSPORTATION

US 20: GRACE STREET TO SHALES PARKWAY
SIGNING PLAN

SCALE: 1"=50' | SHEET 2 OF 3 SHEETS | STA. 412+00 TO STA. 442+00

F.A.P RTE.	SECTION	COUNTY	TOTAL SHEETS	SHEET NO.
345	FAP 345 23 BRIDGE	COOK/KANE	379	110
		CONTRACT NO. 62U83		
		ILLINOIS	FED. AID PROJECT	

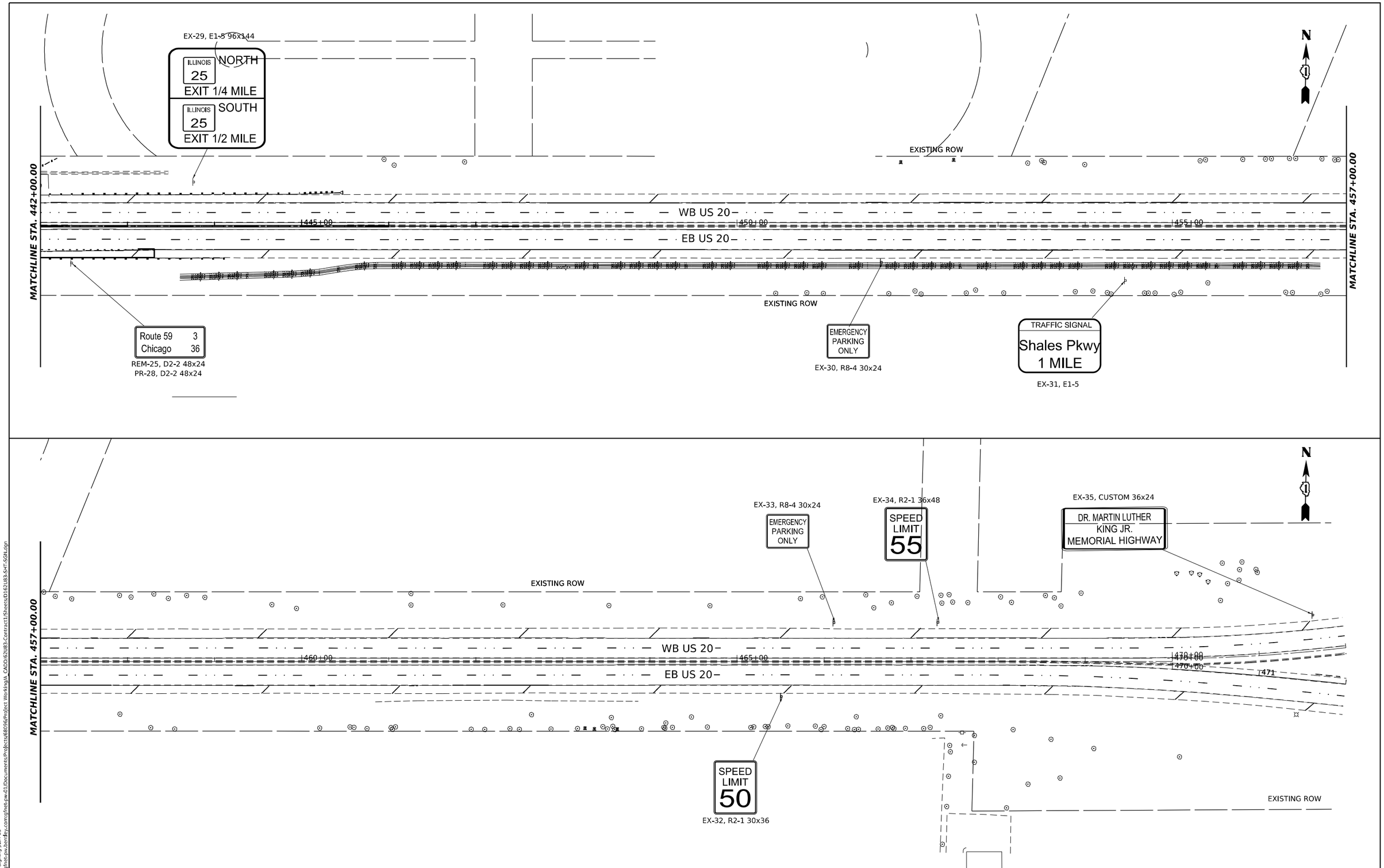

MODEL: US20 Sht Signing plan-03
FILE NAME: pw://gfnet-pw.bentley.com:gfnet-pw-01/Documents/Projects/68096/Project Working/A CADD/62U83-Contract1/Sheets/D162U83-SHT-SGN.dgn

CERA	USER NAME = jstarzyk	DESIGNED - DE	REVISED -	STATE OF ILLINOIS DEPARTMENT OF TRANSPORTATION	US 20: GRACE STREET TO SHALES PARKWAY SIGNING PLAN
		DRAWN - DE	REVISED -		
	PLOT SCALE = 0.16666685 ' / in.	CHECKED -	REVISED -		
	PLOT DATE = 3/20/2024	DATE - 3/20/2024	REVISED -		SCALE: 1"=50' SHEET 3 OF 3 SHEETS STA. 442+00 TO STA. 472+00

F.A.P RTE.	SECTION	COUNTY	TOTAL SHEETS	SHEET NO.
345	FAP 345 23 BRIDGE	COOK/KANE	379	111
		CONTRACT NO. 62U83		
		ILLINOIS	FED. AID PROJECT	

SIGNING SCHEDULE

SIGN NUMBER	EXISTING STATION	EXISTING OFFSET	DESIGNATION	DESCRIPTION	PANEL WIDTH (IN)	PANEL HEIGHT (IN)	PANEL AREA (SQ FT)	72400100 REMOV SIN PAN ASSY TA (EA)	72400200 REMOV SIN PAN ASSY TB (EA)	72400310 REMOV SIGN PANEL TY1 (SQ FT)	72400320 REMOV SIGN PANEL TY2 (SQ FT)
EX-1	403+58	38.1 LT	I-3	FOX RIVER	24	18	3.0				
EX-2	405+00	44.7 LT	E1-5	EXIT NUMBER - ILLINOIS ROUTE 31 1/4 MILE							
EX-3	408+36	46.3 RT	W13-2	ADVISORY EXIT 15 MPH	24	42	7.0				
EX-4	408+50	55.5 LT	M3-4	WEST	24	12	2.0				
EX-5	408+50	55.5 LT	M1-4	US ROUTE 20	24	24	4.0				
EX-6	409+39	48.3 RT	M1-I100	ILLINOIS ROUTE 25	24	24	4.0				
EX-7	409+39	48.3 RT	M6-2R	DIAGONAL UP ARROW	21	15	2.2				
EX-8	410+27	50.1 RT	W13-3	RAMP SPEED 15 MPH	24	42	7.0				
EX-9	413+53	71.4 LT	E1-5	EXIT NUMBER - ILLINOIS ROUTE 25							
EX-10	411+66	43.4 LT	W4-1	MERGE	48	48	16.0				
EX-11	411+58	54.5 RT	E5-1	EXIT GORE	48	48	16.0				
EX-12	411+58	54.4 RT	R5-1a	WRONG WAY	36	24	6.0				
EX-13	411+94	76.3 RT	R5-1a	WRONG WAY	36	24	6.0				
EX-14	412+16	146.2 RT	R5-1	DO NOT ENTER	36	36	9.0				
EX-15	412+76	136.6 RT	R5-I100	FREEWAY EXCLUSION	48	60	20.0				
EX-16	414+00	49.2 RT	R12-4	WEIGHT LIMIT	36	24	6.0				
EX-17	412+58	66.7 LT	R5-1a	WRONG WAY	36	24	6.0				
EX-18	412+81	81.4 LT	R5-1a	WRONG WAY	36	24	6.0				
EX-19	412+38	106.1 LT	R5-1	DO NOT ENTER	36	36	9.0				
EX-20	412+66	112.2 LT	R5-1	DO NOT ENTER	36	36	9.0				
EX-21	031+39	29 LT	R4-7	KEEP RIGHT	24	30	5.0				
EX-22	412+21	103.3 LT	R5-I100	FREEWAY EXCLUSION	48	60	20.0				
EX-23	412+20	41.3 RT	W1-6	ONE DIRECTION LARGE ARROW	48	24	8.0				
EX-24	412+59	47.1 LT	E5-1	EXIT GORE	48	48	16.0				
EX-25	413+16	43.8 RT	W4-1	MERGE	48	48	16.0				
EX-26	413+53	71.5 LT	E1-5	EXIT NUMBER - ILLINOIS ROUTE 25 SOUTH							
EX-27	413+67	47.7 LT	W13-3	RAMP SPEED 20 MPH	24	42	7.0				
EX-28	425+40	62.2 LT	E1-5	EXIT NUMBER - ILLINOIS ROUTE 25 NORTH							
EX-29	443+76	50.7 LT	E1-5	EXIT - ILLINOIS 25 NORTH/SOUTH	96	144	96				
EX-30	451+66	41.6 RT	R8-4	EMERGENCY PARKING ONLY	30	24	5.0				
EX-31	454+46	62.2 RT	E1-5	TRAFFIC SIGNAL-SHALES PKWY 1 MILE							
EX-32	465+51	40.2 RT	R2-1	SPEED LIMIT 50	30	36	7.5				
EX-33	466+11	44.8 LT	R8-4	EMERGENCY PARKING ONLY	30	24	5.0				
EX-34	467+31	45.3 LT	R2-1	SPEED LIMIT 55	36	48	12.0				
EX-35	471+66	41.3 LT	CUSTOM	DR MARTIN LUTHER KING JR MEMORIAL HIGHWAY	36	24	6.0				
REM-1	414+72	50.5 LT	W13-2	ADVISORY EXIT 20 MPH	24	42	7.0			7.0	
REM-2	419+70	38.1 LT	R12-4	WEIGHT LIMIT	36	24	6.0			6.0	
REM-3	424+34	43.1 LT	E5-1	EXIT GORE	48	48	16.0				16.0
REM-4	424+37	50.1 LT	W1-8	CHEVRON ALIGNMENT	18	24	3.0	1		3.0	
REM-5	424+37	50.1 LT	W1-8	CHEVRON ALIGNMENT	18	24	3.0			3.0	
REM-6	424+34	58.61 LT	W1-8	CHEVRON ALIGNMENT	18	24	3.0	1		3.0	
REM-7	424+34	58.61 LT	W1-8	CHEVRON ALIGNMENT	18	24	3.0			3.0	
REM-8	424+31	66.6 LT	W1-8	CHEVRON ALIGNMENT	18	24	3.0	1		3.0	
REM-9	424+31	66.6 LT	W1-8	CHEVRON ALIGNMENT	18	24	3.0			3.0	
REM-10	424+25	75.6 LT	R5-1	DO NOT ENTER	36	36	9.0			9.0	
REM-11	424+74	71.6 LT	R5-1	DO NOT ENTER	36	36	9.0			9.0	
REM-12	425+77	50.4 LT	W13-3	RAMP SPEED 15 MPH	24	32	5.3		1	5.3	
REM-13	425+77	50.4 LT	R5-1a	WRONG WAY	36	24	6.0			6.0	
REM-14	425+10	40.1 RT	W4-1	MERGE	48	48	16.0				16.0
REM-15	427+56	46.6 LT	W13-2	ADVISORY EXIT 15 MPH	24	32	5.3			5.3	
REM-16	428+19	54.3 RT	M3-2	EAST	24	12	2.0			2.0	
REM-17	428+19	54.3 RT	M1-4	US ROUTE 20	24	24	4.0	1		4.0	
REM-18	428+19	54.3 RT	M6-1R	RIGHT DIRECTIONAL ARROW	21	15	2.2			2.2	
REM-19	428+39	40.5 RT	R3-1	NO RIGHT TURN	36	36	9.0			9.0	
REM-20	428+51	77.8 RT	R5-I100	FREEWAY EXCLUSION	48	60	20.0				20.0
REM-21	429+66	52.0 RT	M3-2	EAST	24	12	2.0	1		2.0	
REM-22	429+66	52.0 RT	M1-4	US ROUTE 20	24	24	4.0			4.0	
REM-23	431+65	49.9 RT	I1-I104	COOK COUNTY	24	18	3.0			3.0	
REM-24	430+92	45.7 LT	I1-I104	KANE COUNTY	24	18	3.0			3.0	
REM-25	442+36	42.2 RT	D2-2	DISTANCE - ROUTE 59 3/CHICAGO 36	48	24	8.0			8.0	
							Total	5	1	102.9	52

MODEL: US20 Sht Signing schedule-01
FILE NAME: pw://gfmdt-pw.bentley.com:gfmdt-pw-01/Documents/Projects/68096/Project Working/A CADD/62U83-Contract1/Sheets/D162U83-Sht-SGN.dgn

CERA

USER NAME = jstarzyk	DESIGNED -	REVISED -	
	DRAWN - DE	REVISED -	
PLOT SCALE = 100.00010728 ' / in.	CHECKED - DE	REVISED -	
PLOT DATE = 3/20/2024	DATE - 3/20/2024	REVISED -	

STATE OF ILLINOIS
DEPARTMENT OF TRANSPORTATION

US 20: GRACE STREET TO SHALES PARKWAY
SIGNING SCHEDULE

SCALE: | SHEET 1 OF 2 SHEETS | STA. TO STA.

F.A.P RTE.	SECTION	COUNTY	TOTAL SHEETS	SHEET NO.
345	FAP 345 23 BRIDGE	COOK/KANE	379	112
		CONTRACT NO. 62U83		
	ILLINOIS	FED. AID PROJECT		

SIGNING SCHEDULE

SIGN NUMBER	PROPOSED STATION	PROPOSED OFFSET	DESIGNATION	DESCRIPTION	PANEL WIDTH (IN)	PANEL HEIGHT (IN)	PANEL AREA (SQ FT)	72000100 SIGN PANEL T1 (SQ FT)	72000200 SIGN PANEL T2 (SQ FT)	72800100 TELESCOPING STEEL SIGN SUPPORT (LF) P1	73000100 WOOD SIGN SUPPORT (FT)
PR-1	410+92	52.3 RT	R3-5R	RIGHT TURN ONLY	30	36	7.5	7.5		13	
PR-2	UTILITY	UTILITY	W13-2	ADVISORY EXIT 20 MPH	24	42	7.0	7.0		13	
PR-3	417+26	51.4 LT	R3-5R	RIGHT TURN ONLY	30	36	7.5	7.5		13	
PR-4	419+70	43.9 LT	R12-4	WEIGHT LIMIT	36	24	6.0	6.0		14	
PR-5	424+34	43.1 LT	E5-1	EXIT GORE	48	48	16.0		16.0	14	
PR-6	424+37	50.1 LT	W1-8	CHEVRON ALIGNMENT	18	24	3.0	3.0		17	
PR-7	424+37	50.1 LT	W1-8	CHEVRON ALIGNMENT	18	24	3.0	3.0			
PR-8	424+34	58.61 LT	W1-8	CHEVRON ALIGNMENT	18	24	3.0	3.0		16	
PR-9	424+34	58.61 LT	W1-8	CHEVRON ALIGNMENT	18	24	3.0	3.0			
PR-10	424+31	66.6 LT	W1-8	CHEVRON ALIGNMENT	18	24	3.0	3.0		15	
PR-11	424+31	66.6 LT	W1-8	CHEVRON ALIGNMENT	18	24	3.0	3.0			
PR-12	424+25	75.6 LT	R5-1	DO NOT ENTER	36	36	9.0	9.0		13	
PR-13	UTILITY	UTILITY	R5-1	DO NOT ENTER	36	36	9.0	9.0			
PR-14	UTILITY	UTILITY	W13-3	RAMP SPEED 15 MPH	24	32	5.3	5.3			
PR-15	UTILITY	UTILITY	R5-1a	WRONG WAY	36	24	6.0	6.0			
PR-16	425+09	40.9 RT	W4-1	MERGE	48	48	16.0		16.0		13
PR-17	427+56	46.6 LT	W13-2	ADVISORY EXIT 15 MPH	24	32	5.3	5.3			15
PR-18	428+19	54.3 RT	M3-2	EAST	24	12	2.0	2.0			
PR-19	428+19	54.3 RT	M1-4	US ROUTE 20	24	24	4.0	4.0			
PR-20	428+19	54.3 RT	M6-1R	RIGHT DIRECTIONAL ARROW	21	15	2.2	2.2			
PR-21	428+39	40.5 RT	R3-1	NO RIGHT TURN	36	36	9.0	9.0		14	
PR-22	428+51	77.8 RT	R5-I100	FREEWAY EXCLUSION	48	60	20.0		20.0		18
PR-23	429+54	51.1 LT	R3-5R	RIGHT TURN ONLY	30	36	7.5	7.5		13	
PR-24	UTILITY	UTILITY	M3-2	EAST	24	12	2.0	2.0			
PR-25	UTILITY	UTILITY	M1-4	US ROUTE 20	24	24	4.0	4.0			
PR-26	UTILITY	UTILITY	I1-I104	COOK COUNTY	24	18	3.0	3.0			
PR-27	430+92	45.7 LT	I1-I104	KANE COUNTY	24	18	3.0	3.0		12	
PR-28	442+36	42.2 RT	D2-2	DISTANCE - ROUTE 59 3/CHICAGO 36	48	24	8.0	8.0			26
							Total	125.4	52	154.0	72.0

MODEL: US20 Sht Signing schedule-02
FILE NAME: pw://gfnet-pw.bentley.com:gfnet-pw-01/Documents/Projects/68096/Project Working/A_CADD/62U83-Contract1/Sheets/D162U83-SHT-SGN.dgn

CERA

USER NAME = jstarzyk	DESIGNED - DE	REVISED -	
	DRAWN - DE	REVISED -	
PLOT SCALE = 100.00010728 ' / in.	CHECKED -	REVISED -	
PLOT DATE = 3/20/2024	DATE - 3/20/2024	REVISED -	

STATE OF ILLINOIS
DEPARTMENT OF TRANSPORTATION

US 20: GRACE STREET TO SHALES PARKWAY
SIGNING SCHEDULE

SCALE: | SHEET 2 OF 2 SHEETS | STA. | TO STA.

F.A.P RTE.	SECTION	COUNTY	TOTAL SHEETS	SHEET NO.
345	FAP 345 23 BRIDGE	COOK/KANE	379	113
		CONTRACT NO. 62U83		
	ILLINOIS	FED. AID PROJECT		

IDOT LIGHTING LEGEND

- PROPOSED SINGLE ARM LIGHTING UNIT 47.5' M.H., 15' M.A., WITH LUMINAIRE, LED, ROADWAY, OUTPUT DESIGNATION H, WITH TRANSFORMER BASE BREAKAWAY DEVICE, 240V
- (R) EXISTING SINGLE ARM LIGHTING UNIT TO BE REMOVED AND SALVAGED
- (E) EXISTING SINGLE ARM LIGHTING UNIT TO REMAIN IN PLACE
- (T) TEMPORARY LIGHTING UNIT, 80' WOOD POLE, 70' M.H., 15' M.A., WITH LUMINAIRE, LED, ROADWAY, OUTPUT DESIGNATION I, WIRED FOR 240V
- O R EXISTING UNDERPASS LUMINAIRE TO BE REMOVED, SALVAGE
- O PROPOSED UNDERPASS LUMINAIRE, LED, UNDERPASS, PIER MOUNTED, OUTPUT DESIGNATION E, 240V
- UNDERGROUND RIGID GALVANIZED STEEL CONDUIT (RGC) SIZE AS INDICATED
- UNIT DUCT, AS SPECIFIED IN PLANS
- A AERIAL CABLE, AS SPECIFIED IN PLANS
- EXISTING CABLE AND CONDUIT TO BE REMOVED
- EXISTING CABLE AND CONDUIT TO REMAIN IN PLACE
- PROPOSED LIGHTING CONTROLLER, PEDESTAL MOUNTED 240/480V, 100 AMP, SINGLE PHASE, 3 WIRE
- T TEMPORARY LIGHTING CONTROLLER, POLE MOUNTED, 240/480V, 100 AMP, SINGLE PHASE, 3 WIRE
- R EXISTING LIGHTING CONTROLLER TO BE REMOVED
- EXISTING LIGHTING CONTROLLER FOUNDATION TO REMAIN
- PROPOSED ELECTRIC SERVICE LOCATION
- T TEMPORARY ELECTRIC SERVICE LOCATION
- EXISTING ELECTRIC SERVICE LOCATION
- J PROPOSED JUNCTION BOX, SIZE AND TYPE PER PLAN
- WOOD POLE, 80 FT, CLASS 4

CALL-OUT SAMPLES

DEFINITION	EXAMPLE

CKT. NO.
LOCATION
SET BACK AS INDICATED IN GENERAL NOTES

MZAI
STA. 591+85
SET BACK 7 FT

HC A I
- POLE NUMBER
- CIRCUIT NUMBER
- LIGHTING CONTROL CABINET

CONDUIT SIZE
TYPE, LENGTH

3" DIA.
RGC, 50 FT

CIRCUITS
CONDUCTORS RACEWAY

CKT. MZAB
3-1/C#8, 1/C#10 GND,
1" DIA. UNIT DUCT

CONTROLLER DESIGNATION
LOCATION
DESCRIPTION

PROPOSED LIGHTING CONTROLLER "MZ"
STA. 590+95, 51FT LT
1-PHASE, 240/480V, 3 WIRE

ABBREVIATIONS

ABBREVIATION	DESCRIPTION
AC	ALTERNATING CURRENT
A/C	AERIAL CABLE
AFG	ABOVE FINISHED GRADE
AMP	AMPERE
CB	CIRCUIT BREAKER
CKT	CIRCUIT
CNC	COILABLE NONMETALLIC CONDUIT
CP	CONTROL PANEL
DIA.	DIAMETER
E	EXISTING UNIT TO REMAIN
ECA	ELECTRIC CABLE ASSEMBLY
FT	FEET OR FOOT
FU	FUSE
GND	GROUND
HID	HIGH INTENSITY DISCHARGE
HMLT	HIGH MAST LIGHT TOWER
HPS	HIGH PRESSURE SODIUM
JB	JUNCTION BOX
KVA	KILOVOLT-AMPERE
KW	KILOWATTS
M.A.	MAST ARM
M.H.	MOUNTING HEIGHT
NO.	NUMBER
P	POLE
RGC	RIGID GALVANIZED CONDUIT
RGS	RIGID GALVANIZED STEEL
STA	STATION
T	TEMPORARY LIGHTING UNIT
TB	TRANSFORMER BASE
TMP	TEMPORARY
UD	UNIT DUCT
V	VOLT
W	WATT
WP	WOOD POLE
XFMR	TRANSFORMER

GENERAL NOTES:

1. LIGHT POLE SET BACKS ARE MEASURED FROM EDGE OF TRAVELED PAVEMENT TO CENTER OF POLE.
2. IF CONCRETE FOUNDATION ARE UTILIZED, NO LIGHT POLE SHALL BE ERECTED UNTIL THE FOUNDATION HAS CURED PER ARTICLE 1020.13 OF THE STANDARD SPECIFICATIONS.
3. THE ELECTRICAL WORK SHALL BE PERFORMED IN ACCORDANCE WITH THE IDOT STANDARD SPECIFICATIONS FOR ROAD AND BRIDGE CONSTRUCTION, LATEST EDITION.
4. THE ASSOCIATED POLES, ARMS, LUMINAIRES, AND BREAKAWAY DEVICES FROM EXISTING LIGHTING UNITS AND UNDERPASS LUMINAIRES TO BE REMOVED SHALL BE SALVAGED TO THE CITY OF ELGIN PUBLIC WORKS MAINTENANCE FACILITY AT 1900 HOLMES ROAD, ELGIN, IL. THE CONTRACTOR SHALL CALL ELGIN PUBLIC WORKS AT LEAST 48 HOURS IN ADVANCE AT 847-931-6001TO ARRANGE DELIVERY. THIS WORK WILL BE PAID FOR AS "REMOVAL OF LIGHTING UNIT, SALVAGE."
5. ALL NEW UNIT DUCTS, CONDUITS, JUNCTION BOXES, AND APPURTENANCES ARE ILLUSTRATED DIAGRAMMATICALLY ON THE PLANS. THE ACTUAL LOCATIONS IN THE FIELD SHALL MEET WITH THE APPROVAL OF THE ENGINEER.
6. UNIT DUCT CASINGS UNDER PAVEMENT SHALL EXTEND 2 FT BEYOND THE EDGE OF SHOULDER OR BACK OF CURB, AS APPLICABLE.
7. REMOVAL OF EXISTING CONDUIT/CABLE ATTACHED TO STRUCTURES TO BE REMOVED IS INCLUDED IN THE PRICE OF STRUCTURE REMOVAL. SEE UNDERPASS LIGHTING REMOVAL PLAN FOR STAGING INFORMATION.
8. LIGHT STANDARDS SHALL BE INSTALLED MINIMUM 5 FT BEHIND GUARDRAIL. CONTRACTOR TO ENSURE FOUNDATION IS CLEAR OF THE NOISE ABATEMENT WALL FOOTING.

BILL OF MATERIALS

ITEM DESCRIPTION	UNIT	TOTAL
ELECTRIC SERVICE INSTALLATION	EACH	3
ELECTRIC UTILITY SERVICE CONNECTION	L SUM	1
UNDERGROUND CONDUIT, GALVANIZED STEEL, 3" DIA.	FOOT	295
CONDUIT ATTACHED TO STRUCTURE, 3/4" DIA., PVC COATED GALVANIZED STEEL	FOOT	410
CONDUIT ATTACHED TO STRUCTURE, 2" DIA., PVC COATED GALVANIZED STEEL	FOOT	30
CONDUIT EMBEDDED IN STRUCTURE, 2' DIA., PVC	FOOT	1380
JUNCTION BOX, STAINLESS STEEL, ATTACHED TO STRUCTURE, 6" X 6" X 4"	EACH	8
JUNCTION BOX, STAINLESS STEEL, ATTACHED TO STRUCTURE, 12" X 10" X 6"	EACH	12
JUNCTION BOX, STAINLESS STEEL, ATTACHED TO STRUCTURE, 18" X 18" X 8"	EACH	6
UNIT DUCT, 600V, 3-1C NO.6, 1/C NO.8 GROUND, (XLP-TYPE USE), 1 1/4" DIA. POLYETHYLENE	FOOT	4881
ELECTRIC CABLE IN CONDUIT, 600V (XLP-TYPE USE) 1/C NO. 10	FOOT	1944
ELECTRIC CABLE IN CONDUIT, 600V (XLP-TYPE USE) 1/C NO. 8	FOOT	1419
ELECTRIC CABLE IN CONDUIT, 600V (XLP-TYPE USE) 3-1/C NO. 6	FOOT	1419
AERIAL CABLE, 3-1/C NO. 6 WITH MESSENGER WIRE	FOOT	2650
LUMINAIRE, LED, ROADWAY, OUTPUT DESIGNATION H	EACH	20
LUMINAIRE, LED, UNDERPASS, WALLMOUNT, OUTPUT DESIGNATION E	EACH	8
LIGHTING CONTROLLER, PEDESTAL MOUNTED, 240VOLT, 100AMP	EACH	1
LIGHT POLE, ALUMINUM, 47.5 FT. M.H., 15 FT. MAST ARM	EACH	20
LIGHT POLE, WOOD, 80 FOOT, CLASS 3, WITH 15 FT MAST ARM	EACH	12
LIGHT POLE FOUNDATION, 24" DIAMETER	FOOT	18
LIGHT POLE FOUNDATION, METAL, 15" BOLT CIRCLE, 10" X 8'	EACH	18
BREAKAWAY DEVICE, TRANSFORMER BASE, 15 INCH BOLT CIRCLE	EACH	20
REMOVAL OF TEMPORARY LIGHTING UNIT	EACH	12
REMOVAL OF LIGHTING UNIT, SALVAGE	EACH	16
REMOVAL OF POLE FOUNDATION	EACH	8
REMOVAL OF LIGHTING CONTROLLER	EACH	1
REMOVAL OF ELECTRIC SERVICE INSTALLATION	EACH	2
REMOVAL OF LIGHTING CONTROLLER FOUNDATION	EACH	2
REMOVE ELECTRIC CABLE FROM CONDUIT	FOOT	6675
TEMPORARY WOOD POLE, 80 FEET, CLASS 4	EACH	3
TEMPORARY LUMINAIRE, LED, ROADWAY, OUTPUT DESIGNATION I	EACH	12
TEMPORARY LIGHTING CONTROLLER, 240 VOLT, POLE MOUNTED	EACH	2
LUMINAIRE SAFETY CABLE ASSEMBLY	EACH	32
MAINTENANCE OF LIGHTING SYSTEM	CAL MO	12

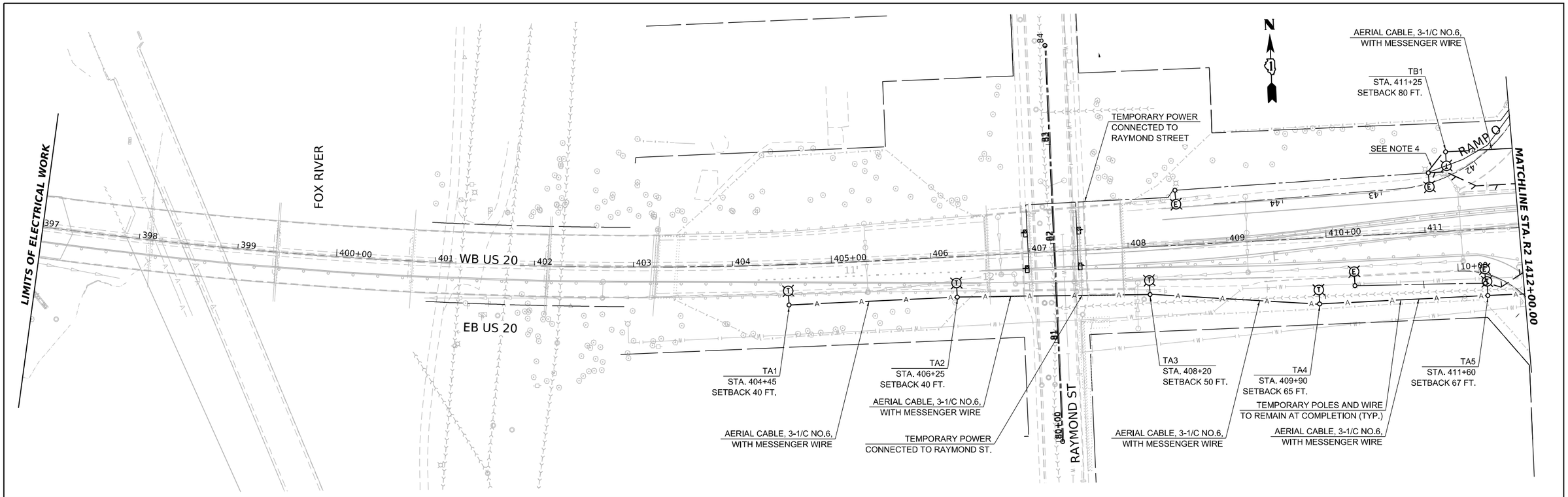

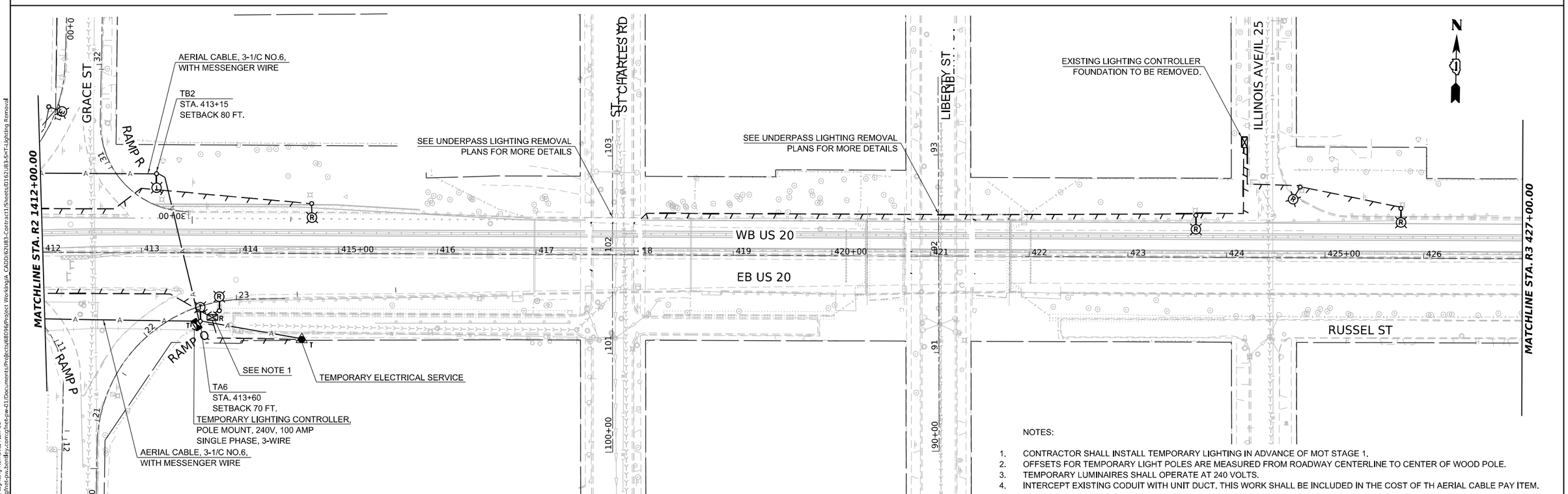

NOTES:

1. CONTRACTOR SHALL INSTALL TEMPORARY LIGHTING IN ADVANCE OF MOT STAGE 1.
2. OFFSETS FOR TEMPORARY LIGHT POLES ARE MEASURED FROM ROADWAY CENTERLINE TO CENTER OF WOOD POLE.
3. TEMPORARY LUMINAIRES SHALL OPERATE AT 240 VOLTS.
4. INTERCEPT EXISTING CODUIT WITH UNIT DUCT. THIS WORK SHALL BE INCLUDED IN THE COST OF TH AERIAL CABLE PAY ITEM.

MODEL: US20 Sht Lighting Removal Plan-10
FILE NAME: pw://ghnt-pw.bentley.com:ghnt-pw-01/Documents/Projects/68096/Project Working/A CADD/62U83-Contract1\Sheets\D162U83-SHT-Lighting Removal

TranSmart
100 S. Wacker Drive Suite 400
Chicago, Illinois 60606

USER NAME = jstarzyk	DESIGNED -	REVISED -
	DRAWN -	REVISED -
PLOT SCALE = 0.166667 ' / in.	CHECKED -	REVISED -
PLOT DATE = 3/20/2024	DATE - 3/20/2024	REVISED -

STATE OF ILLINOIS
DEPARTMENT OF TRANSPORTATION

US 20: GRACE STREET TO SHALES PARKWAY
TEMPORARY LIGHTING AND REMOVAL PLAN

SCALE: 1"=50' | SHEET OF SHEETS | STA. TO STA.

F.A.P RTE.	SECTION	COUNTY	TOTAL SHEETS	SHEET NO.
345	FAP 345 23 BRIDGE	COOK/KANE	379	115
		CONTRACT NO. 62U83		
	ILLINOIS	FED. AID PROJECT		

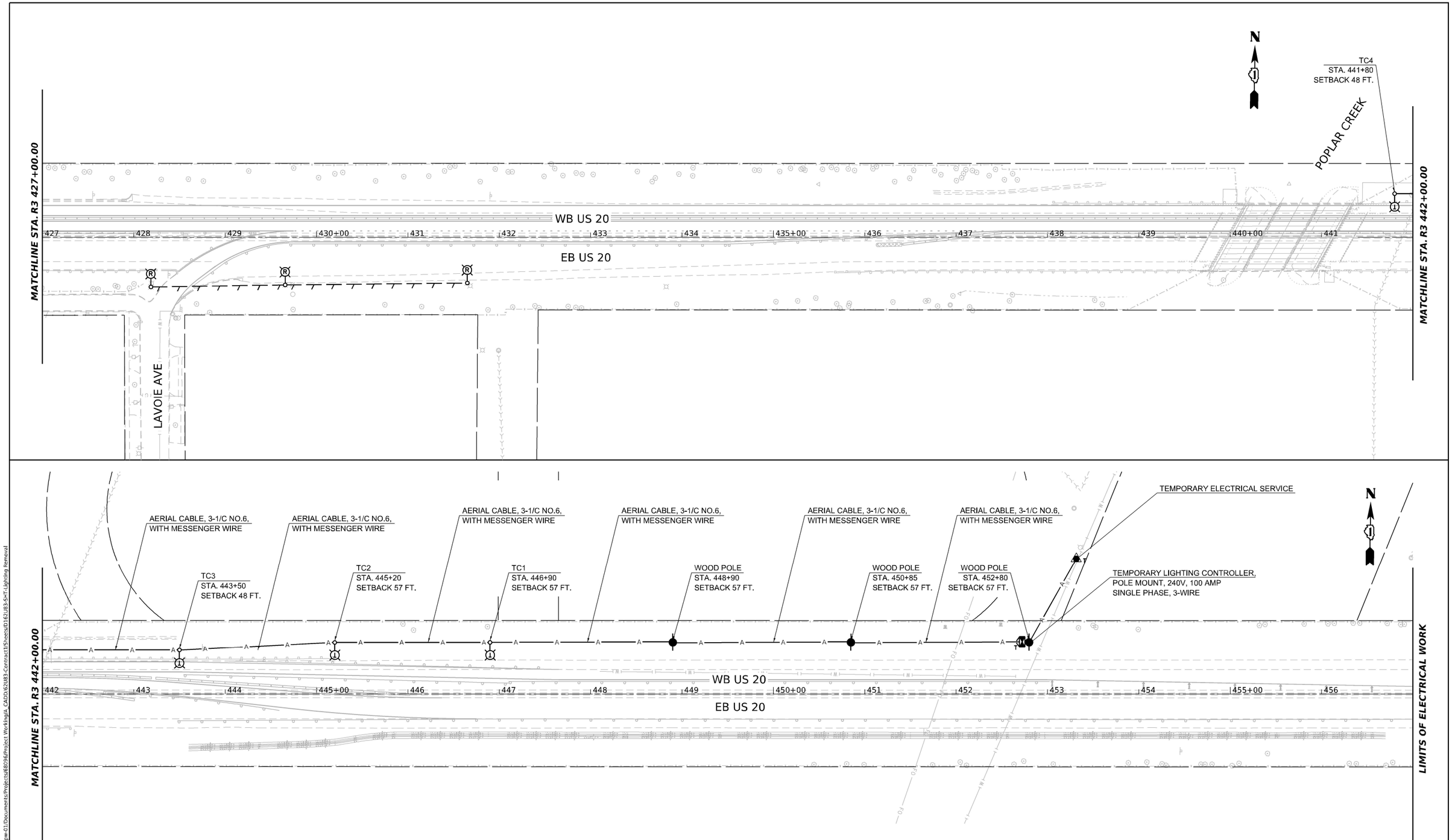

NOTES:

1. CONTRACTOR SHALL INSTALL TEMPORARY LIGHTING IN ADVANCE OF MOT STAGE 1.
2. OFFSETS FOR TEMPORARY LIGHT POLES ARE MEASURED FROM ROADWAY CENTERLINE TO CENTER OF WOOD POLE.
3. TEMPORARY LUMINAIRES SHALL OPERATE AT 240 VOLTS.

MODEL: US20 Sht Lighting Removal Plan-11
FILE NAME: pw://ghnt-pw.bentley.com:ghnt-pw-01/Documents/Projects/68096/Project Working/A_CADD/62U83-Contract1/Sheets/0162U83-SHT-Lighting Removal

TranSmart
100 S. Wacker Drive Suite 400
Chicago, Illinois 60606

USER NAME = jstarzyk	DESIGNED -	REVISED -	
	DRAWN -	REVISED -	
PLOT SCALE = 0.166667 ' / in.	CHECKED -	REVISED -	
PLOT DATE = 3/20/2024	DATE - 3/20/2024	REVISED -	

STATE OF ILLINOIS
DEPARTMENT OF TRANSPORTATION

US 20: GRACE STREET TO SHALES PARKWAY
TEMPOARY LIGHTING AND REMOVAL PLAN

SCALE: 1"=50' | SHEET OF SHEETS | STA. TO STA.

F.A.P RTE.	SECTION	COUNTY	TOTAL SHEETS	SHEET NO.
345	FAP 345 23 BRIDGE	COOK/KANE	379	116

CONTRACT NO. 62U83

ILLINOIS | FED. AID PROJECT

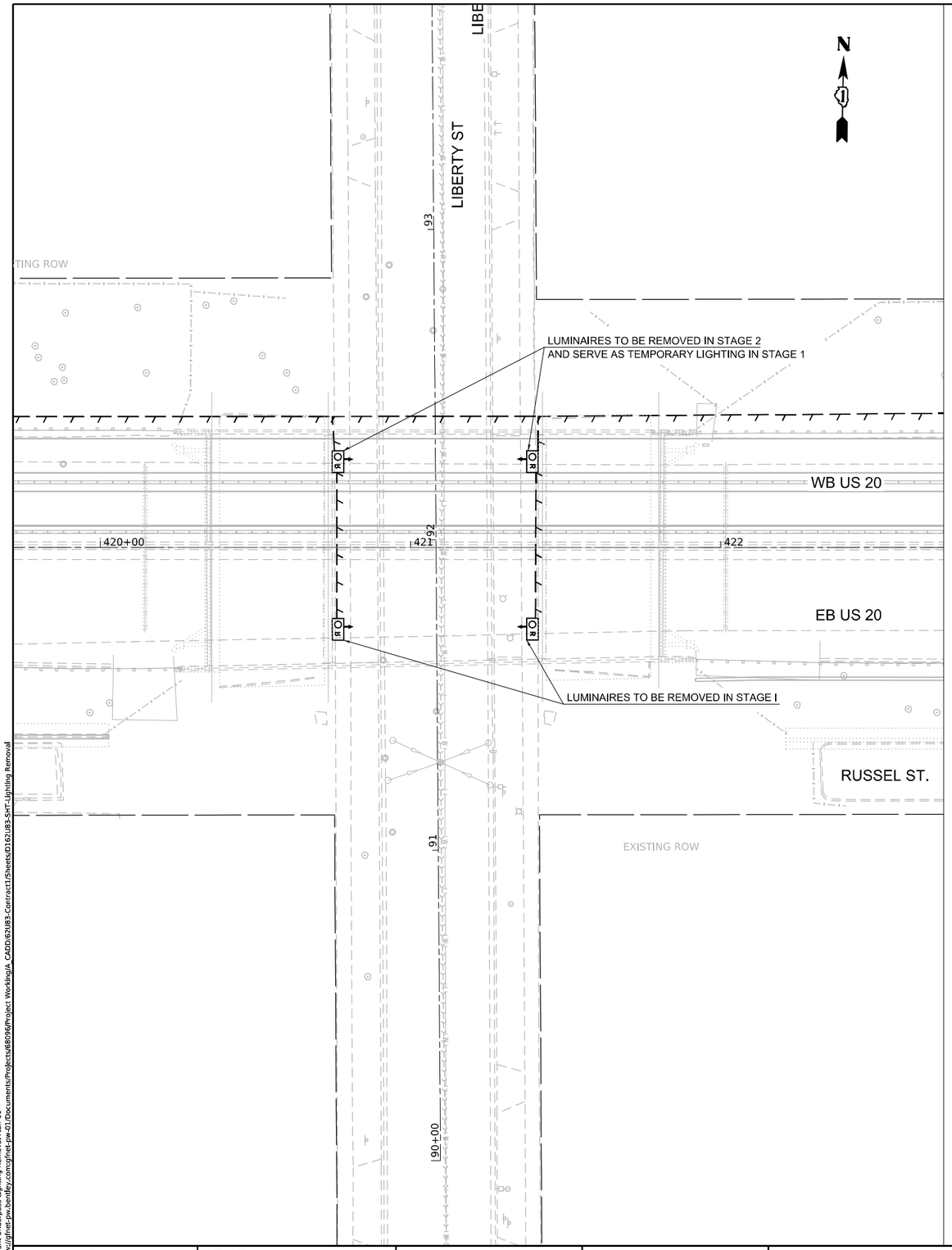

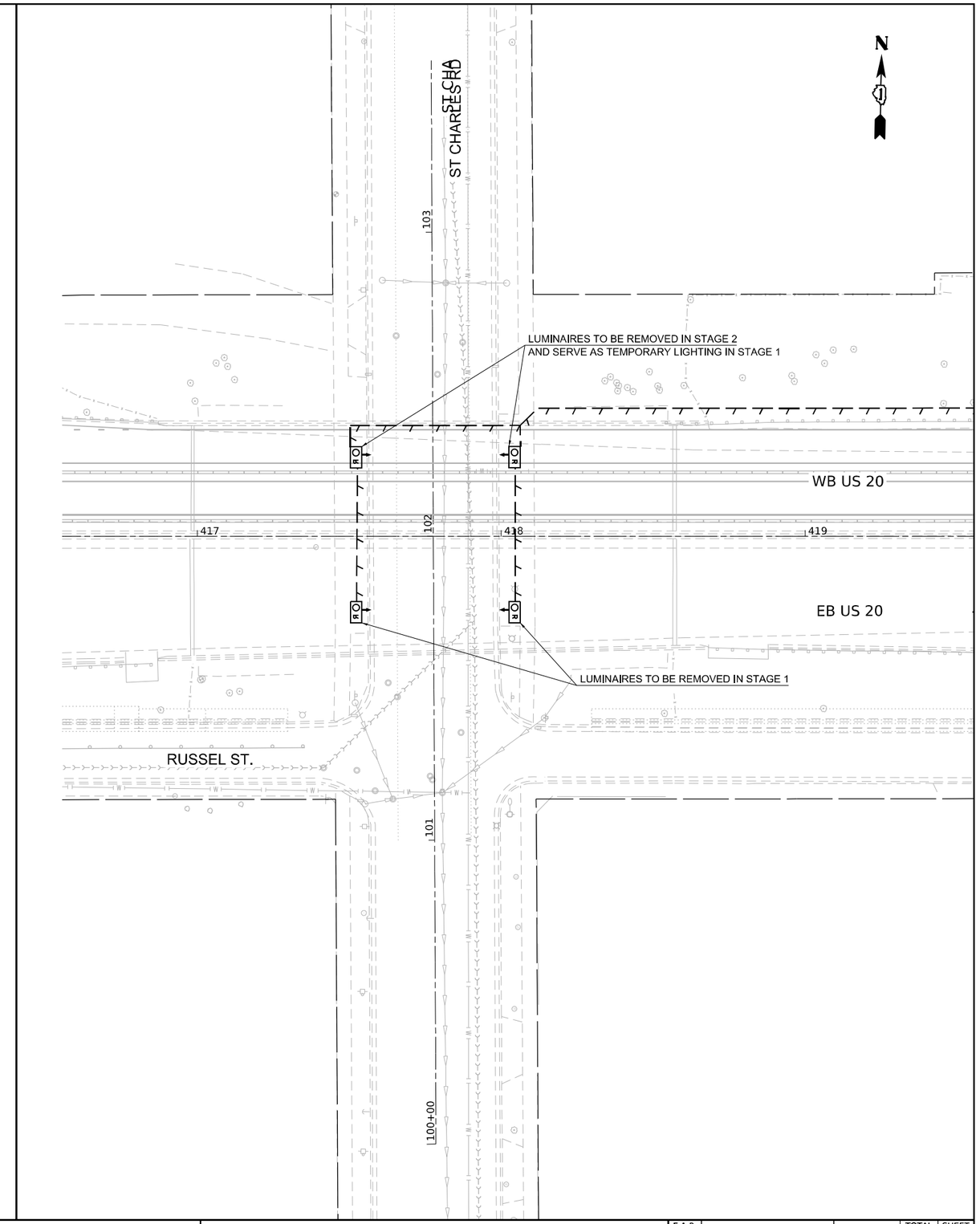

MODEL: US20 Sht Underpass Lighting Removal Plan-01
FILE NAME: pw://gfnet-pw.bentley.com:gfnet-pw-01/Documents/Projects/68096/Project Working/A_CADD/62U83-Contract1/Sheets/D162U83-Sht-Lighting Removal

TranSmart
100 S. Wacker Drive Suite 400
Chicago, Illinois 60606

USER NAME = jstarzyk	DESIGNED -	REVISED -	
	DRAWN -	REVISED -	
PLOT SCALE = 100.000107 ' / in.	CHECKED -	REVISED -	
PLOT DATE = 3/20/2024	DATE - 3/20/2024	REVISED -	

STATE OF ILLINOIS
DEPARTMENT OF TRANSPORTATION

US 20: GRACE STREET TO SHALES PARKWAY
UNDERPASS LIGHTING REMOVAL PLAN

SCALE: 1"=20' | SHEET OF SHEETS | STA. TO STA.

F.A.P RTE.	SECTION	COUNTY	TOTAL SHEETS	SHEET NO.
345	FAP 345 23 BRIDGE	COOK/KANE	379	117
		CONTRACT NO. 62U83		
		ILLINOIS	FED. AID PROJECT	

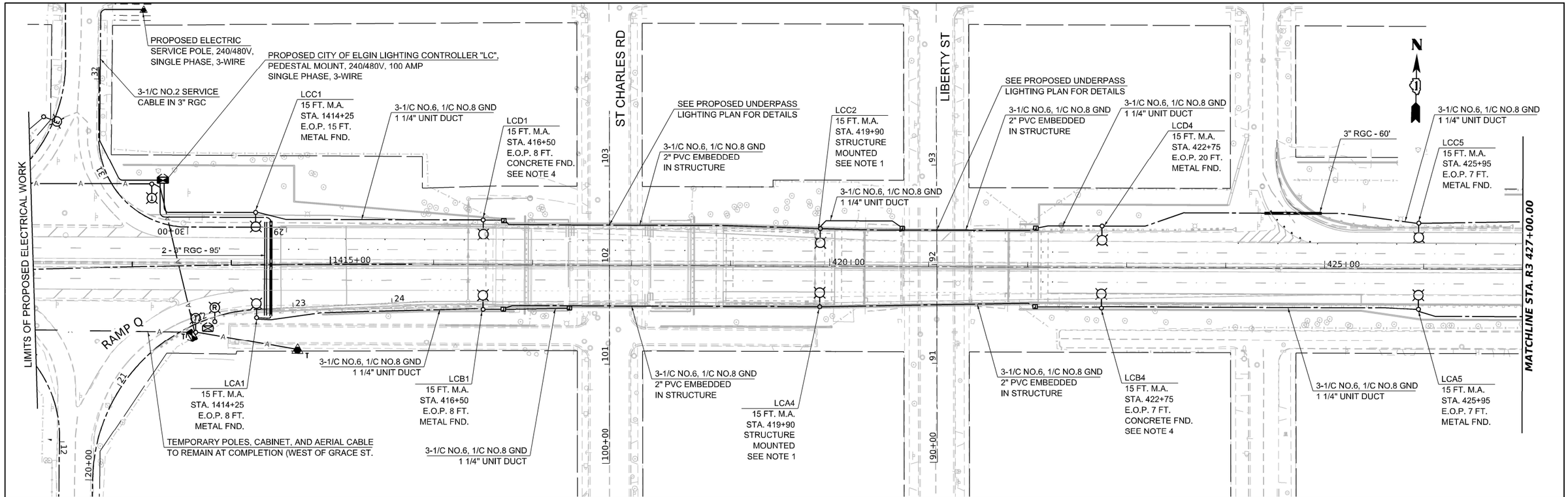

NOTES:

1. COORDINATE FOUNDATION INSTALLATION WITH INSTALLATION OF MOMENT SLAB.
2. PROVIDE AN ADDITIONAL ELBOW TO FEED UNDERPASS LIGHTING CIRCUITS. THE COST OF THIS WORK SHALL BE INCLUDED IN THE COST OF FOUNDATION INSTALLATION.
3. REFER HIGHWAY STANDARD 812001-01 FOR INTEGRAL/SEMI-INTEGRAL ABUTMENT WITH PARAPET ON APPROACH PAVEMENT DETAIL. REFER PROPOSED UNDERPASS LIGHTING PLAN FOR JUNCTION BOX SCHEDULE.
4. CONTRACTOR SHALL COORDINATE CONCRETE FOUNDATION INSTALLATION WITH NOISE ABATEMENT WALL INSTALLATION.

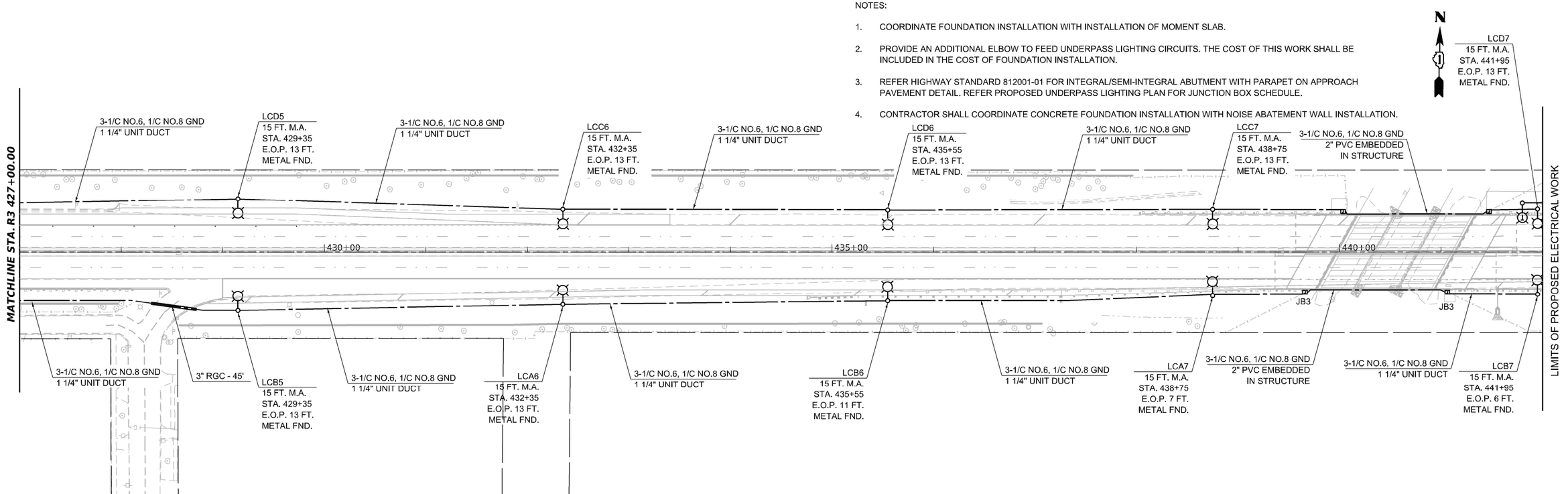

MODEL: US20 Sht Lighting plan-10
FILE NAME: pw://gfnet-pw.bentley.com:gfnet-pw-01/Documents/Projects/68096/Project Working/A_CADD/62U83-Contract1/Sheets/D162U83-Sht-Light

TranSmart 100 S. Wacker Drive Suite 400 Chicago, Illinois 60606	USER NAME = jstarzyk	DESIGNED -	REVISED -	STATE OF ILLINOIS DEPARTMENT OF TRANSPORTATION	US 20: GRACE STREET TO SHALES PARKWAY PROPOSED LIGHTING PLAN
		DRAWN -	REVISED -		
	PLOT SCALE = 0.166667 ' / in.	CHECKED -	REVISED -		
	PLOT DATE = 3/20/2024	DATE - 3/20/2024	REVISED -		SCALE: 1"=50' SHEET OF SHEETS STA. TO STA.

F.A.P RTE.	SECTION	COUNTY	TOTAL SHEETS	SHEET NO.
345	FAP 345 23 BRIDGE	COOK/KANE	379	118
		CONTRACT NO. 62U83		
		ILLINOIS	FED. AID PROJECT	

LEGEND

PROPOSED UNDERPASS LUMINAIRE, LED, OUTPUT DESIGNATION E, 240V

JUNCTION BOX SCHEDULE

DESIGNATION	DESCRIPTION
JB1	6" X 6" X 4", STAINLESS STEEL, ATTACHED TO STRUCTURE
JB2	12" X 10" X 6", STAINLESS STEEL, ATTACHED TO STRUCTURE
JB3	18" X 18" X 8", STAINLESS STEEL, ATTACHED TO STRUCTURE

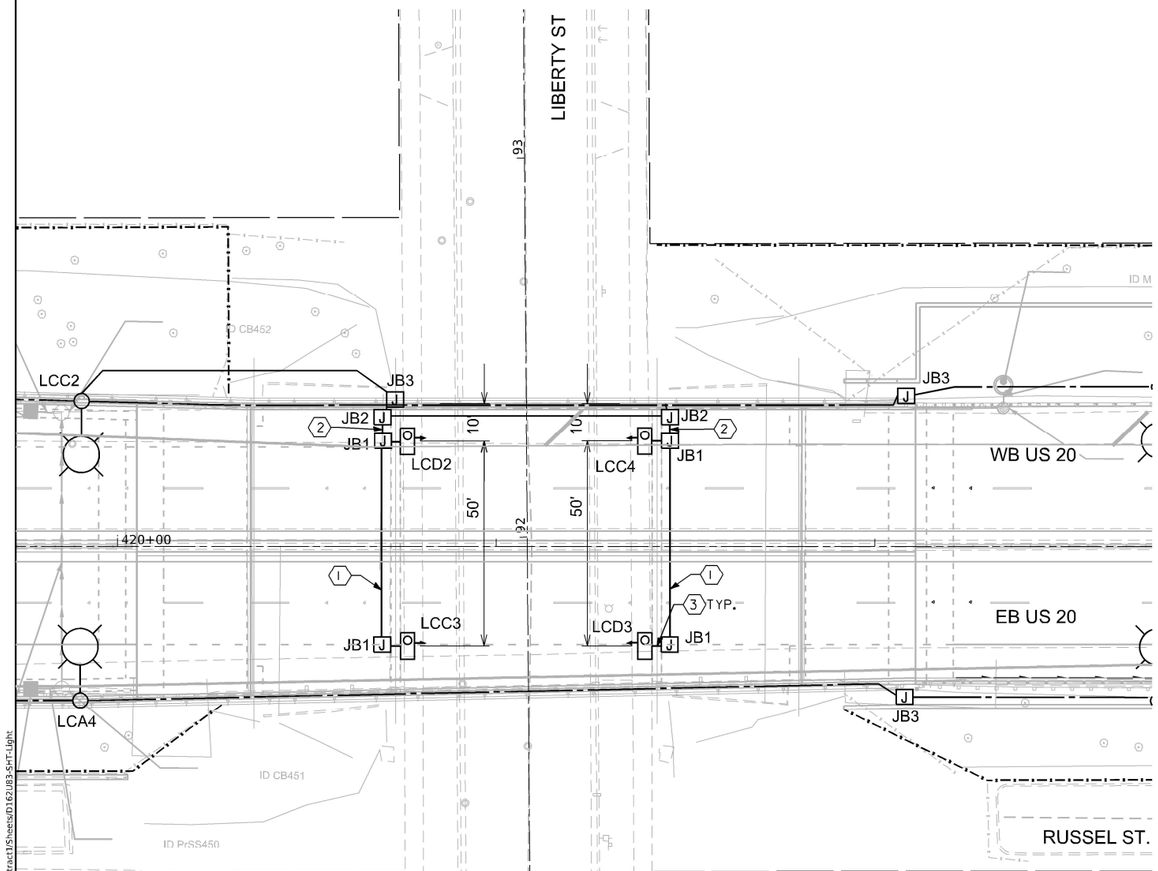

CONDUIT/CABLE SCHEDULE

TAG	DESCRIPTION
1	2-1/C NO. 10, 1/C NO. 10 GND 3/4" DIA. PVCC RGSC ATTACHED TO STRUCTURE
2	3-1/C NO. 10, 1/C NO. 10 GND 3/4" DIA. PVCC RGSC ATTACHED TO STRUCTURE
3	2-1/C NO. 10, 1/C NO. 10 GND 3/4" DIA. DIA. LFMC AT LUMINAIRE

NOTES:

1. UNDERPASS LUMINAIRES SHALL BE WALL MOUNTED TO THE PIER WALL.
2. PROVIDE 30A FUSES WITH DISCONNECT TYPE FUSE HOLDERS FOR PHASE WIRES AND NEUTRAL SLUG IN JB3 JUNCTION BOX. THE COST OF THIS WORK IS INCLUDED IN THE PRICE OF THE JUNCTION BOX.

LEGEND

PROPOSED UNDERPASS LUMINAIRE, LED, OUTPUT DESIGNATION E, 240V

JUNCTION BOX SCHEDULE

DESIGNATION	DESCRIPTION
JB1	6" X 6" X 4", STAINLESS STEEL, ATTACHED TO STRUCTURE
JB2	12" X 10" X 6", STAINLESS STEEL, ATTACHED TO STRUCTURE
JB3	18" X 18" X 8", STAINLESS STEEL, ATTACHED TO STRUCTURE

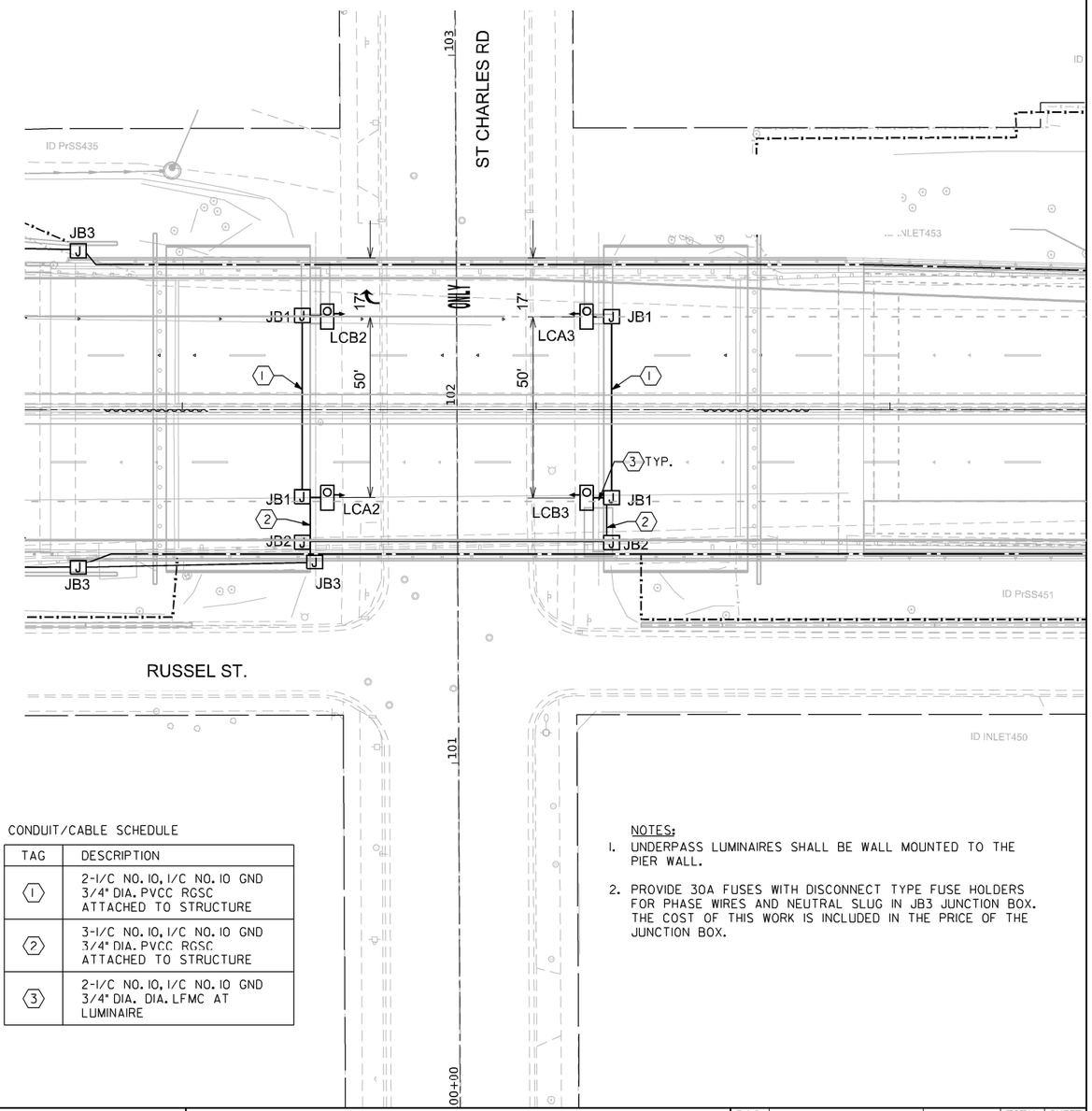

CONDUIT/CABLE SCHEDULE

TAG	DESCRIPTION
1	2-1/C NO. 10, 1/C NO. 10 GND 3/4" DIA. PVCC RGSC ATTACHED TO STRUCTURE
2	3-1/C NO. 10, 1/C NO. 10 GND 3/4" DIA. PVCC RGSC ATTACHED TO STRUCTURE
3	2-1/C NO. 10, 1/C NO. 10 GND 3/4" DIA. DIA. LFMC AT LUMINAIRE

NOTES:

1. UNDERPASS LUMINAIRES SHALL BE WALL MOUNTED TO THE PIER WALL.
2. PROVIDE 30A FUSES WITH DISCONNECT TYPE FUSE HOLDERS FOR PHASE WIRES AND NEUTRAL SLUG IN JB3 JUNCTION BOX. THE COST OF THIS WORK IS INCLUDED IN THE PRICE OF THE JUNCTION BOX.

MODEL: US20 Sht Underpass Lighting Plan-01
FILE NAME: pw://jfnet-pw.bentley.com:jfnet-pw-01/Documents/Projects/68096/Project Working/A_CADD/62U83-Contract1/Sheets/0162U83-SHT-Light

TranSmart
100 S. Wacker Drive Suite 400
Chicago, Illinois 60606

USER NAME = jstarzyk	DESIGNED -	REVISED -	
	DRAWN -	REVISED -	
PLOT SCALE = 100.000107 ' / in.	CHECKED -	REVISED -	
PLOT DATE = 3/20/2024	DATE - 3/20/2024	REVISED -	

STATE OF ILLINOIS
DEPARTMENT OF TRANSPORTATION

US 20: GRACE STREET TO SHALES PARKWAY
PROPOSED UNDERPASS LIGHTING PLAN

SCALE: 1"=20' | SHEET OF SHEETS | STA. TO STA.

F.A.P RTE.	SECTION	COUNTY	TOTAL SHEETS	SHEET NO.
345	FAP 345 23 BRIDGE	COOK/KANE	379	119
		CONTRACT NO. 62U83		
		ILLINOIS	FED. AID PROJECT	

LEGEND

- PROPOSED ROADWAY LUMINAIRE, LED, OUTPUT DESIGNATION H
- PROPOSED UNDERPASS LUMINAIRE, LED, OUTPUT DESIGNATION E, WALL MOUNTED
- PROPOSED LIGHTING CONTROLLER, PEDESTAL MOUNTED.
- PROPOSED ELECTRIC SERVICE LOCATION

LOAD TABLE
PROPOSED IDOT LIGHTING CONTROLLER "LC"

CIRCUIT	RED PHASE (RED CABLE)		CIRCUIT	BLACK PHASE (BLACK CABLE)	
	AMPS	WATTS		AMPS	WATTS
A	8.58	1030	B	8.58	1030
C	8.58	1030	D	8.58	1030
E			F		
G			H		
I			J		
K			L		
M			N		
O			P		
TOTAL	17.16	2060	TOTAL	17.16	2060

TOTAL AMPS: 24.17

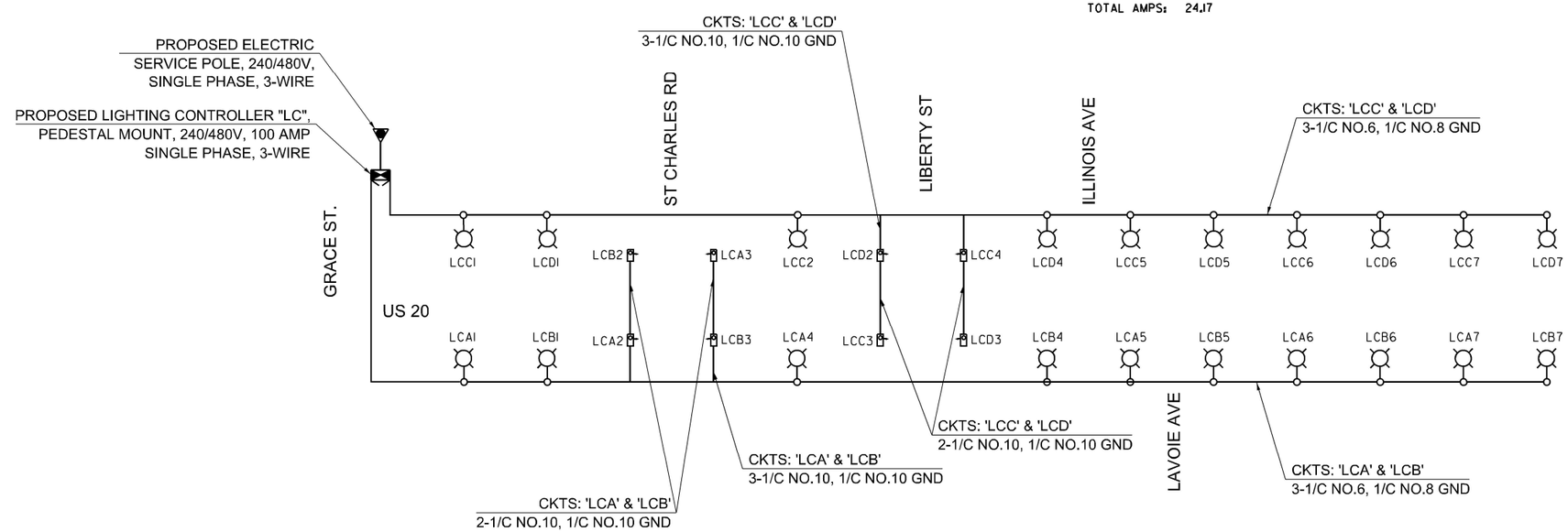

MODEL: US20 Sht Wiring Diagram-01
FILE NAME: pw://ghet-pw.bentley.com:ghet-pw-01/Documents/Projects/68096/Project Working/A_CADD/62U83-Contract1/Sheets/D162U83-SHT-Light

TranSmart
100 S. Wacker Drive Suite 400
Chicago, Illinois 60606

USER NAME = jstarzyk	DESIGNED -	REVISED -	
	DRAWN -	REVISED -	
PLOT SCALE = 0.166667 ' / in.	CHECKED -	REVISED -	
PLOT DATE = 3/20/2024	DATE - 3/20/2024	REVISED -	

STATE OF ILLINOIS
DEPARTMENT OF TRANSPORTATION

US 20: GRACE STREET TO SHALES PARKWAY
WIRING DIAGRAM

SCALE: N.T.S. | SHEET OF SHEETS | STA. TO STA.

F.A.P RTE.	SECTION	COUNTY	TOTAL SHEETS	SHEET NO.
345	FAP 345 23 BRIDGE	COOK/KANE	379	120
		CONTRACT NO. 62U83		
		ILLINOIS	FED. AID PROJECT	

F.A.P. RTE.	SECTION	COUNTY	TOTAL SHEETS	SHEET NO.
345	FAP 345 23 BRIDGE	COOK/KANE	379	121

STA. TO STA.

FED. ROAD DIST. NO. 1 | ILLINOIS | FED. AID PROJECT

SHT 2 OF 6

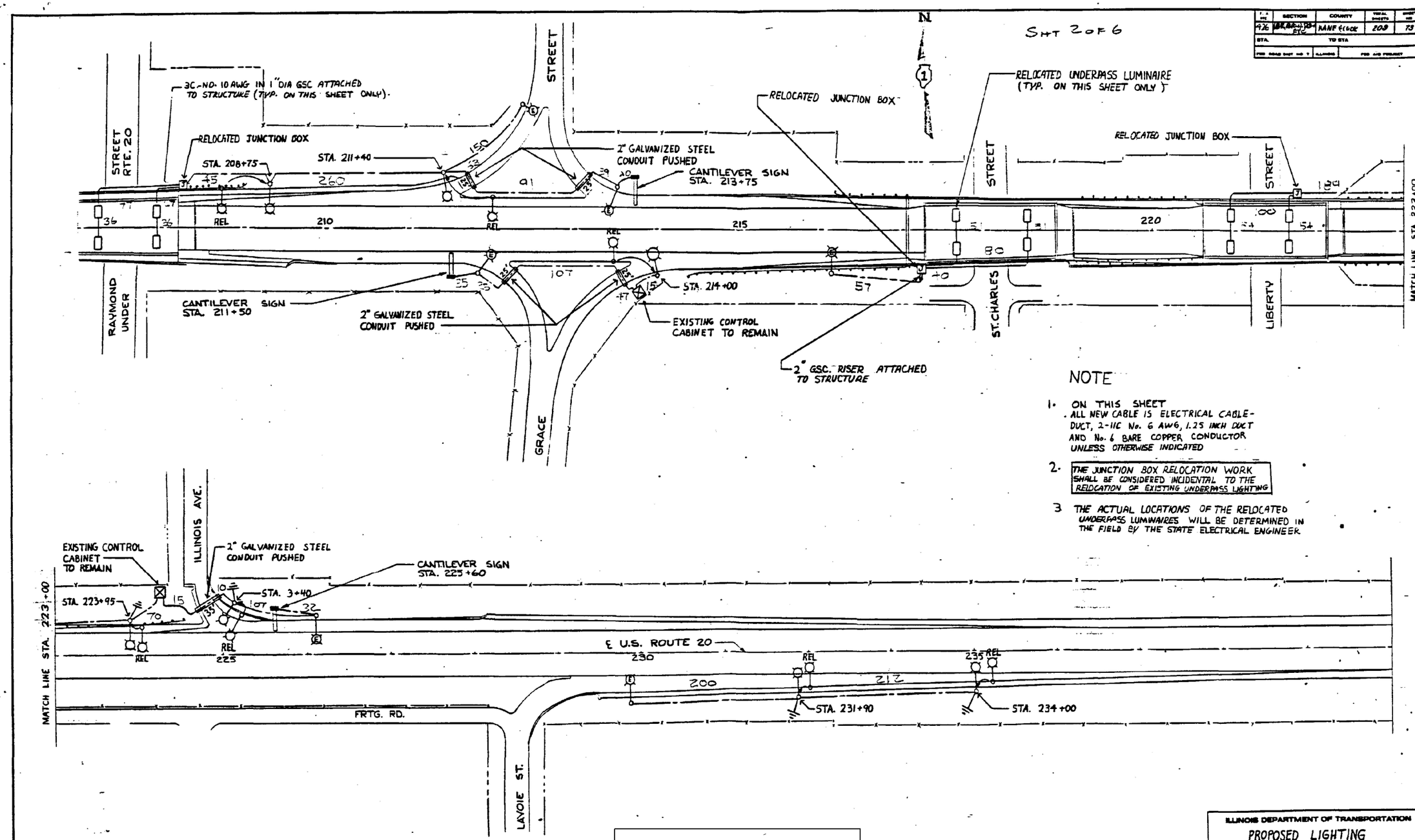

NOTE

1. ON THIS SHEET
   . ALL NEW CABLE IS ELECTRICAL CABLE-DUCT, 2-11C No. 6 AWG, 1.25 INCH DUCT AND No. 6 BARE COPPER CONDUCTOR UNLESS OTHERWISE INDICATED
2. THE JUNCTION BOX RELOCATION WORK SHALL BE CONSIDERED INCIDENTAL TO THE RELOCATION OF EXISTING UNDERPASS LIGHTING
3. THE ACTUAL LOCATIONS OF THE RELOCATED UNDERPASS LUMINAIRES WILL BE DETERMINED IN THE FIELD BY THE STATE ELECTRICAL ENGINEER.

FOR INFORMATION ONLY

ILLINOIS DEPARTMENT OF TRANSPORTATION

PROPOSED LIGHTING PLAN 1

REVISIONS	
NAME	DATE

SCALE: VERT. / HORIZ. 1"=50'

DATE

DRAWN BY

CHECKED BY

E1

MODEL: US20 Sht Lighting Detail-01
FILE NAME: pw://gfnet-pw.bentley.com:gfnet-pw-01/Documents/Projects/68096/Project Working/A CADD/62U83-Contract1/Sheets/0162U83-SHT-Lighting Details

TranSmart
100 S. Wacker Drive Suite 400
Chicago, Illinois 60606

USER NAME = jstarzyk	DESIGNED -	REVISED -	
	DRAWN -	REVISED -	
PLOT SCALE = 0.166667 ' / in.	CHECKED -	REVISED -	
PLOT DATE = 3/20/2024	DATE - 3/20/2024	REVISED -	

STATE OF ILLINOIS
DEPARTMENT OF TRANSPORTATION

US 20: GRACE STREET TO SHALES PARKWAY
LIGHTING DETAILS

SCALE: N.T.S. | SHEET OF SHEETS | STA. TO STA.

F.A.P RTE.	SECTION	COUNTY	TOTAL SHEETS	SHEET NO.
345	FAP 345 23 BRIDGE	COOK/KANE	379	121

CONTRACT NO. 62U83

ILLINOIS | FED. AID PROJECT

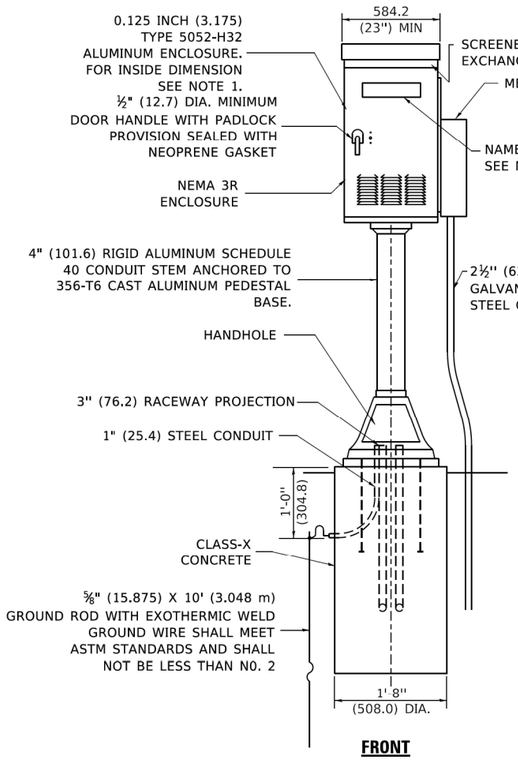

FRONT

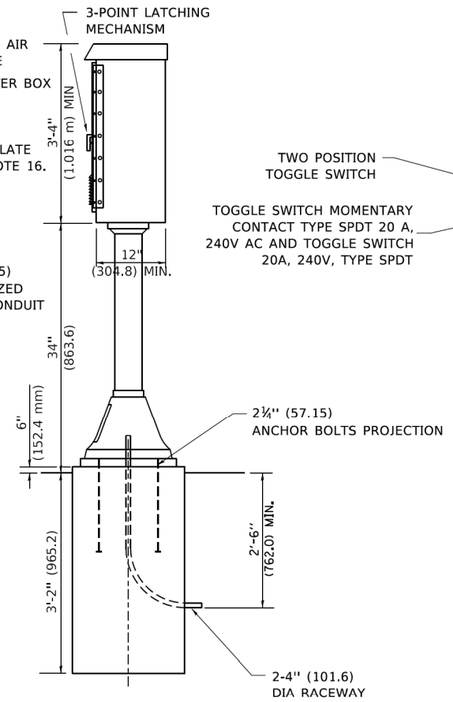

SIDE

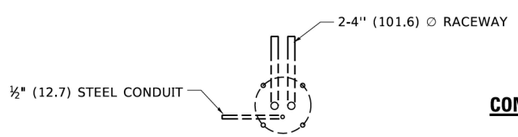

FOUNDATION PLAN

CONTROL CABINET

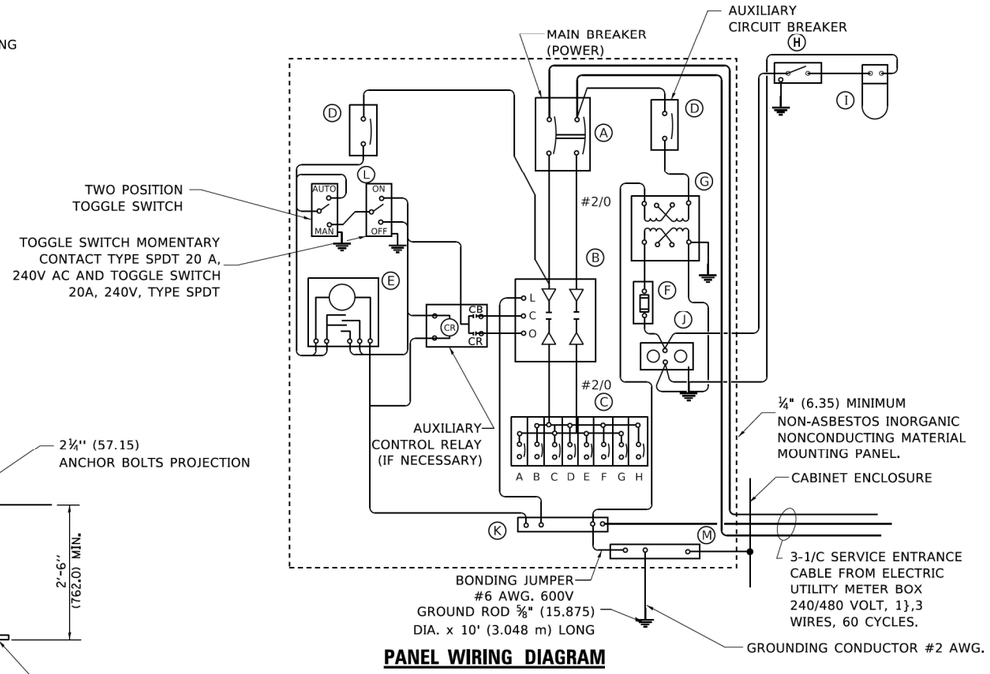

PANEL WIRING DIAGRAM

PANEL EQUIPMENT

BILL OF MATERIAL		
ITEM	QUANTITY	DESCRIPTION
A	1	MAIN CIRCUIT BREAKER, 2 POLE, 600 VOLT 100 AMP. FRAME, 100 AMP. NON-INTERCHANGEABLE TRIP INTERRUPTING RATING NEMA-22000 AMP. AT 480 VOLT.
B	1	REMOTE CONTROL SWITCH, ELECTRICALLY OPERATED, MECHANICALLY HELD, 2 POLE, SINGLE THROW, 100 AMP., 600 VOLTS CONTROL CIRCUIT 240 VOLT.
C	8	CIRCUIT BREAKERS, 1 POLE, 277V., 100 AMP., FRAME 50 AMP. NON-INTERCHANGEABLE TRIP INTERRUPTING RATING NEMA-10,000 AMP. AT 240 V.
D	2	CONTROL CIRCUIT-CIRCUIT BREAKER. 1 POLE, 240 V., 100 AMP. FRAME, 15 AMP. NON-INTERCHANGEABLE TRIP INTERRUPTING RATING NEMA-5000 AMP. AT 240 V.
E	1	ASTRONOMIC MICROPROCESSOR-BASED 2-CHANNEL CONTROLLER [TIME SWITCH].
F	1	20 A., 120 V. FUSE.
G	1	1.5 KVA, SINGLE PHASE, ENCAPSULATED TRANSFORMER 240 X 480 / 120 X 240 VOLT, 60 Hz.
H	1	SPST 20A SWITCH ON DOOR, TO TURN LIGHT ON WHEN DOOR IS OPEN,
I	1	INCANDESCENT LIGHTING FIXTURE ENCLOSED AND GASKETED WITH 60 WATT, 120 V. LAMP.
J	1	20 A., 120 V., DUPLEX RECEPTACLE, GFCI.
K	1	COPPER GROUND BUS ¼" (6.35) X 1" (25.4) X 12" (304.8 mm) LONG MOUNTED ON PANEL WITH LUGS AND 4 SPARE LUGS
L	1	TOGGLE SWITCHES MOUNTED IN 4" (101.6) X 4" (101.6 mm) BOX.
M	1	COPPER GROUND BUS ¼" (6.35) X 1" (25.4) X 12" (304.8 mm) LONG MOUNTED ON PANEL WITH LUGS AND SPARE LUGS

NOTES

1. ALL DIMENSIONS ARE IN INCHES (MILLIMETERS) UNLESS OTHERWISE SHOWN.
2. UNLESS OTHERWISE INDICATED, THE CABINET SHALL BE MOUNTED ATOP A 4-INCH (101.6 mm) RIGID ALUMINUM SCHEDULE 40 CONDUIT STEM ANCHORED TO A CAST ALUMINUM PEDESTAL BASE.
3. IN FRONT OF CONTROL CABINET DOOR, REMOVE VEGETATION AND 2" (50.8 mm) TOP SOIL, LEVEL THE AREA AND ON TOP, PLACE LENGTH WISE PARALLEL TO CONTROL CABINET, A CONCRETE PAD 36" (914.4 mm) x 60" (18.288 m) x 4" (101 mm) MIN. SIZE. THE COST OF LABOR AND MATERIALS ARE INCLUDED IN THE COST OF THE CONTROLLER.
4. DOOR SHALL BE CONSTRUCTED FROM SAME TYPE OF MATERIAL AND THICKNESS AS CABINET.
5. DOOR SHALL BE EQUIPPED WITH THREE POINT LATCHING MECHANISM WITH NYLON ROLLERS AT TOP THE BOTTOM.
6. DOOR HINGE SHALL BE A HEAVY GAUGE CONTINUOUS HINGE WITH A 1#4" (6.35 mm) DIA. STAINLESS STEEL HINGE PIN.
7. ALL EXTERNAL HARDWARE SHALL BE STAINLESS STEEL.
8. CONTROL WIRING TO BE #12 AWG, 600V, TYPE "SIS" GRAY SWITCH BOARD WIRE, STRANDED COPPER.
9. METER BOX SHALL BE MOUNTED ON THE SIDE OF CONTROL CABINET, NEAR TO THE SERVICE POLE.
10. CABINETS SHALL BE PRIMED AND PAINTED AS SPECIFIED.
11. THE HEADS OF CONNECTORS SCREWS SHALL BE PAINTED WHITE FOR NEUTRAL BAR CONNECTION AND GREEN FOR GROUND BAR CONNECTORS.
12. ALL WIRING WITHIN THE CABINET SHALL BE COLOR CODED AS INDICATED:

    R = RED BL = BLUE W = WHITE
    B = BLACK Y = YELLOW G = GREEN

13. PROVIDE SEALING GROMMETS FOR ALL OPEN WIRING EXTENDED FROM DEVICES IN BOXES OR CABINETS WITHIN THE CONTROL CABINET.
14. ALL WIRING SHALL BE NEATLY DRESSED AND SUPPORTED.
15. THE CONTROLLER SHALL BE CONSTRUCTED TO U.L. STD. 508 AND BEAR THE U.L. LABEL "ENCLOSED INDUSTRIAL CONTROL PANEL".
16. 12" (304.8) X 16" (406.4 mm) STAINLESS STEEL EXTERIOR NAMEPLATE SHALL BE ENGRAVED TO " CITY OF ELGIN LIGHTING CONTROLS" UNLESS OTHERWISE SPECIFIED.

LIGHT POLE FOUNDATION DEPTH TABLE
40 FT. (12.192 m) TO 47.5 FT. (14.478 m) MOUNTING HEIGHT

SOIL CONDITIONS	DESIGN DEPTH "D" OF FOUNDATION	
	SINGLE ARM POLE	TWIN ARM POLE
SOFT CLAY Qu = 0.375 TON/SQ. FT.	13'-0" (3.96 m)	15'-0" (4.57 m)
MEDIUM CLAY Qu = 0.75 TON/SQ.FT	9'-6" (2.09 m)	10'-9" (3.23 m)
STIFF CLAY Qu = 1.50 TON/SQ. FT.	7'-0" (2.13 m)	8'-0" (2.44 m)
LOOSE SAND ∅ = 34°	9'-0" (2.74 m)	10'-0" (3.05 m)
MEDIUM SAND ∅ = 37.5°	8'-3" (2.52 m)	9'-0" (2.74 m)
DENSE SAND ∅ = 40°	7'-9" (2.36 m)	9'-0" (2.74 m)

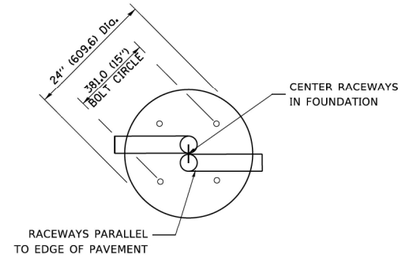

TOP VIEW

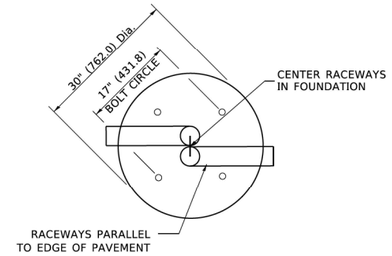

TOP VIEW

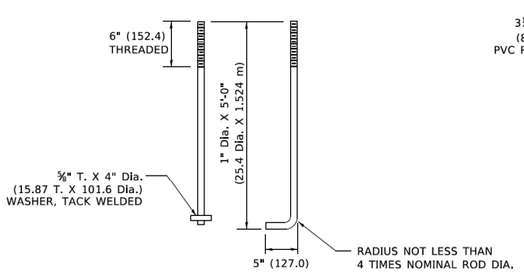

ANCHOR ROD DETAIL

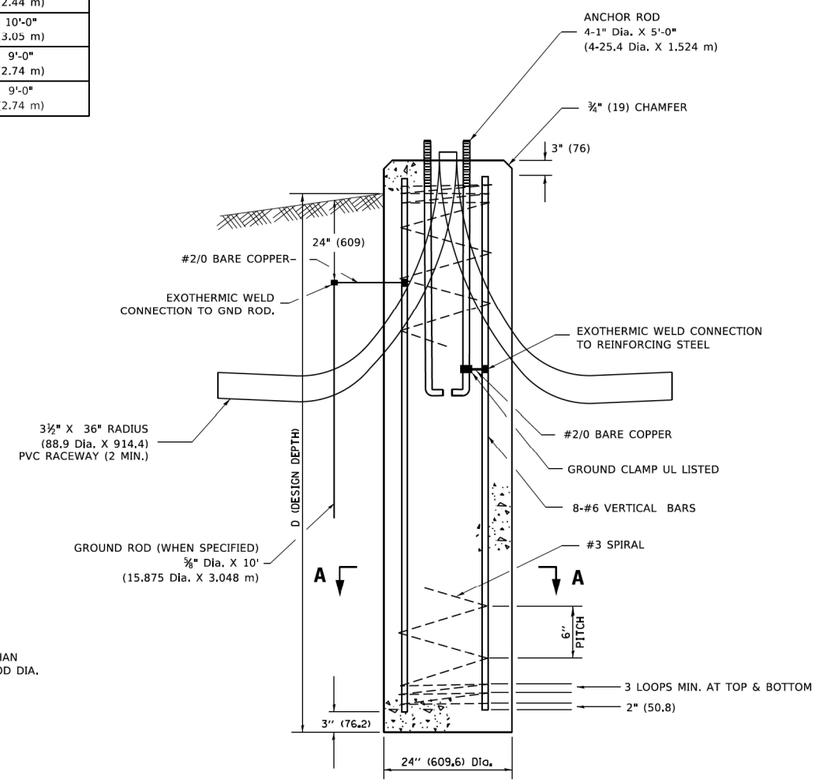

FOUNDATION DETAIL

NOTES

1. ALL DIMENSIONS ARE IN INCHES (MILLIMETERS) UNLESS OTHERWISE SHOWN.
2. THE ANCHOR RODS AND RACEWAYS SHALL BE PROPERLY SECURED IN PLACE BEFORE THE CONCRETE IN PLACED.
3. THE FOUNDATION SHALL NOT PROTRUDE MORE THAN 100MM (4 IN.) ABOVE THE FINISHED GRADE WITHIN A 60 IN. (1.5 m) CHORD ACROSS THE FOUNDATION, WITH ANCHOR RODS INCLUDED, IN ACCORDANCE WITH AASHTO GUIDELINES. IF THE FOUNDATION HEIGHT, INCLUDING ANCHOR RODS, EXTENDS BEYOND THESE SPECIFIED LIMITS, THE FOUNDATION SHALL BE REPLACED AT THE CONTRACTOR'S EXPENSE. SEE FOUNDATION EXTENSION DETAIL.
4. THE HOLE FOR THE FOUNDATION SHALL BE MADE BY DRILLING WITH AN AUGER, OF THE SAME DIAMETER AS THE FOUNDATION. IF SOIL CONDITIONS REQUIRE THE USE OF A LINER TO FORM THE HOLE, THE LINER SHALL BE WITHDRAWN AS THE CONCRETE IS DEPOSITED.
5. THE TOP OF THE FOUNDATION SHALL BE CONSTRUCTED LEVEL. A LINER OR FORM SHALL BE USED TO PRODUCE A UNIFORM SMOOTH SIDE TO THE TOP OF THE FOUNDATION. FOUNDATION TOP SHALL BE CHAMFERED 3#4-IN. (20 mm).
6. THE CONCRETE SHALL BE CLASS SI. CONCRETE SHALL CURE ACCORDING TO ARTICLE 1020.13 BEFORE LIGHT POLES ARE INSTALLED.
7. THE ANCHOR ROD SHALL BE A HOOK ROD TYPE. COLD BENDING OF THE ANCHOR ROD WILL NOT BE ALLOWED. THE RADIUS OF THE HOOK BEND SHALL NOT BE LESS THAN 4 TIMES THE NOMINAL DIAMETER OF THE ANCHOR ROD. A TACK WELDED ANCHOR ROD MAY BE SUBSTITUTED WITH THE APPROVAL OF THE ENGINEER.
8. THE ANCHOR RODS SHALL BE ACCORDING TO ASTM F1554 GRADE 725 (GRADE 105). NUTS SHALL BE HEXAGON NUTS ACCORDING TO ASTM A 194 2H OR ASTM A 563 DH, AND WASHERS SHALL BE ACCORDING TO ASTM F 436.
9. ANCHOR RODS, NUTS AND WASHERS SHALL BE COMPLETELY GALVANIZED BY EITHER THE HOT-DIPPED PROCESS CONFORMING WITH AASHTO M 232, THE MECHANICAL PLATING METHOD CONFORMING TO AASHTO M 298, CLASS 50 WITH A MAXIMUM COATING THICKNESS OF 150 UM(6 MILS) OR THE ELECTROLYTIC PROCESS ACCORDING TO ASTM F 1136.
10. THE ANCHOR RODS SHALL BE THREADED A MINIMUM OF 6 INCHES (150 mm) WITH A MINIMUM OF 3 INCHES (75 mm) OF THREADED ANCHOR ROD EMBEDDED IN THE FOUNDATION.
11. ANCHOR RODS SHALL PROJECT 23#4" (69.9 mm) ABOVE THE TOP OF THE FOUNDATION. IF BREAKAWAY COUPLINGS ARE SPECIFIED, THE CONTRACTOR SHALL CAREFULLY COORDINATE THE ANCHOR ROD PROJECTION WITH THE INSTALLATION REQUIREMENTS OF THE BREAKAWAY COUPLINGS.
12. THE CONTRACTOR SHALL USE A #3 SPIRAL AT 6" (152.4 mm) PITCH OR MAY SUBSTITUTE #3 TIES AT 12" (304.8 mm) O.C. WITH THE APPROVAL OF THE ENGINEER.
13. THE CABLE TRENCHES AND FOUNDATION SHALL BE BACK FILLED AND COMPACTED AS SPECIFIED BEFORE THE LIGHT POLE IS ERECTED.
14. THE RACEWAYS SHALL PROJECT 1" (25.4 mm) ABOVE THE TOP OF THE FOUNDATION.

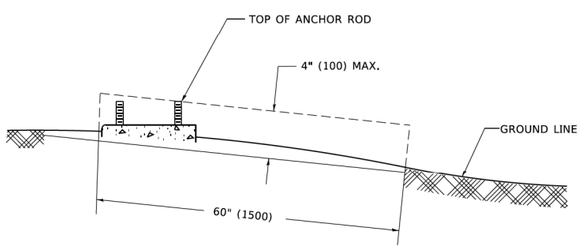

FOUNDATION EXTENSION DETAIL

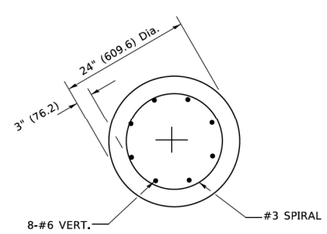

SECTION A–A

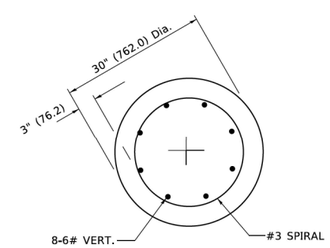

SECTION A–A

MODEL: US20 Sht Lighting Detail-03
FILE NAME: pw://jfnet-pw.bentley.com:jfnet-pw-01/Documents/Projects/68096/Project Working/A_CADD/62U83-Contract1/Sheets/D162U83-SHT-Lighting Details

TranSmart
100 S. Wacker Drive Suite 400
Chicago, Illinois 60606

USER NAME = jstarzyk	DESIGNED -	REVISED -	
	DRAWN -	REVISED -	
PLOT SCALE = 0.166667 ' / in.	CHECKED -	REVISED -	
PLOT DATE = 3/20/2024	DATE - 3/20/2024	REVISED -	

STATE OF ILLINOIS
DEPARTMENT OF TRANSPORTATION

US 20: GRACE STREET TO SHALES PARKWAY
LIGHT POLE FOUNDATION, 40' T0 47 1//2' M.H. 15" B.C.

SCALE: N.T.S. | SHEET OF SHEETS | STA. TO STA.

F.A.P RTE.	SECTION	COUNTY	TOTAL SHEETS	SHEET NO.
345	FAP 345 23 BRIDGE	COOK/KANE	379	123
BE-301		CONTRACT NO. 62U83		
	ILLINOIS	FED. AID PROJECT		

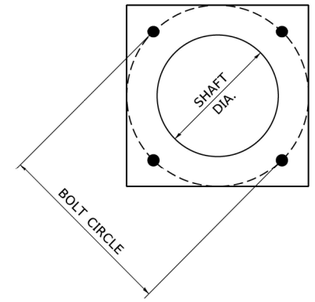

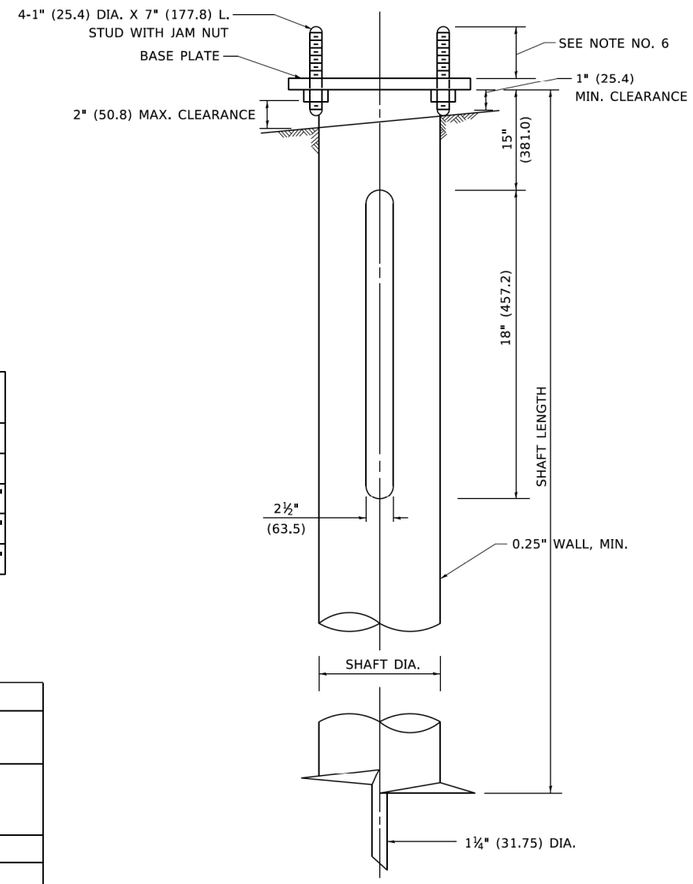

NOTES

1. ALL DIMENSION IN INCHES (MILLIMETERS) UNLESS OTHERWISE SHOWN.
2. ALL MATERIAL SHALL BE GALVINIZED ACCORDING TO AASHTO M111, UNLESS OTHERWISE SPECIFIED.
3. ALL WELDS SHALL BE CONTINUOUS AND NOT LESS THAN 1#4" (6.35 mm) FILLET WELDS. THE WELDED FOUNDATION SHALL BE CAPABLE OF WITHSTANDING 10,000 FT/LBS (13558.18 n.m) OF INSTALLATION TORQUE APPLIED ABOUT THE AXIS OF THE FOUNDATION.
4. THE HELIX FOUNDATION SHAFT SHALL BE INSTALLED VERTICAL AND THE BASE PLATE SHALL BE IN LEVEL. THE BREAKAWAY COUPLINGS AND HARDWARE SHALL NOT BE USED TO ALIGN THE POLE INSTALLATION.
5. THE CABLE TRENCH SHALL BE BACKFILLED AND FIRMLY COMPACTED BEFORE THE INSTALLATION OF THE LIGHT POLE.
6. THE CONTRACTOR SHALL COORDINATE EXTENSION OF ANCHOR BOLTS ABOVE TOP OF THE BASE PLATE WITH THE BREAKAWAY DEVICE MANUFACTURER'S REQUIREMENTS.
7. ANY VOIDS WITHIN THE METAL FOUNDATION SHALL BE FILLED WITH FINE AGGREGATE.
8. METAL FOUNDATIONS SHALL BE INSTALLED IN UNDISTURBED SOIL. PREDRILLING A PILOT HOLE AND/OR BACKFILLING AROUND THE FOUNDTION IS NOT ALLOWED.
9. THE METAL FOUNDATION SHALL NOT BE INSTALLED TO A TORQUE WHICH EXCEEDS THE MANUFACTURER'S MAXIMUM TORQUE RATING NOR SHALL IT BE INSTALLED TO AN INSTALLATION TORQUE VALUE OF LESS THAN 3,500 FT LB (4,750 KNM). METAL FOUNDATIONS THAT ARE NOT INSTALLED TO FULL INSTALLATION DEPTH OR DO NOT ACHIEVE THE MINIMUM INSTALLATION TORQUE SHALL BE REMOVED AND REPLACED WITH A CONCRETE FOUNDATION AT NO ADDITIONAL COST.
10. THE BASEPLATE SHALL BE PERPENDICULAR TO THE SHAFT AXIS (± 1°) AND THE HOLE CENTERLINE SHALL BE CONCENTRIC (± 0.188) TO THE SHAFT AXIS.
11. THE PILOT POINT AND SHAFT AXIS SHALL BE CONCENTRIC (± 0.125) AND IN LINE (± 2°).
12. THE BASEPLATE SHALL BE STAMPED WITH THE MANUFACTURERS NAME AND DATE OF MANUFACTURE.

HELIX FOUNDATION SIZE

POLE MOUNTING HEIGHT	BOLT CIRCLE	SHAFT DIAMETER	SHAFT LENGTH	BASEPLATE
30 FT.	11½"	8⅝"	6 FT.	12"x12"x1"
31 FT.-35 FT.	11½"	8⅝"	6 FT.	12"x12"x1"
36 FT.-40FT.	15"	8⅝"	6 FT.	15"x15"x1¼"
41 FT.-45 FT.	15"	8⅝"	6 FT.	15"x15"x1¼"
46 FT.-50 FT.	15"	10"	8 FT.	15"x15"x1¼"

METAL HELIX FOUNDATION MATERIALS

ITEM	MATERIAL REQUIREMENT
BASEPLATE	AASHTO M 270M, GRADE 36 (M270M, GRADE 250)
SHAFT	ASTM A 252, GRADE 2 (PHOSPHOROUS 0.04% MAXIMUM, SULFUR 0.05% MAXIMUM)
HELIX SCREW	AASHTO M 183 (ASTM A 635)
PILOT POINT	AASHTO M 270 (ASTM A 575)
ANCHOR RODS/STUDS	AASHTO M 314 (ASTM F 1554)
HEXAGON NUTS	AASHTO M 291M (ASTM A 563) GRADE DH, OR AASHTO M 292 (ASTM A 194) GRADE 2H
WASHERS	AASHTO M 293 (ASTM F 436)

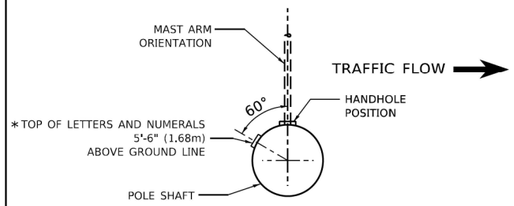

POSITION OF HANDHOLE AND POLE NUMBER FOR SINGLE MAST ARM POLES MOUNTED ON BRIDGE PARAPET OR BARRIER WALL

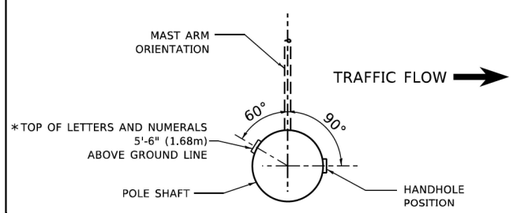

POSITION OF HANDHOLE AND POLE NUMBER FOR SINGLE MAST ARM POLES

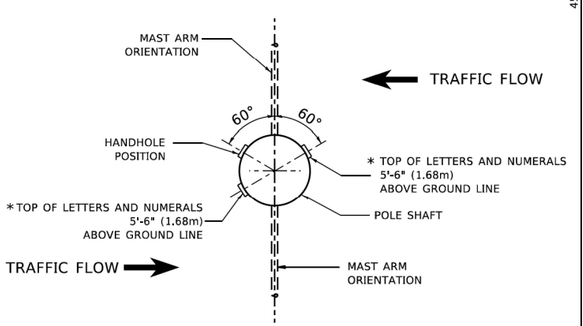

POSITION OF HANDHOLE AND POLE NUMBER FOR TWIN MAST ARM POLES

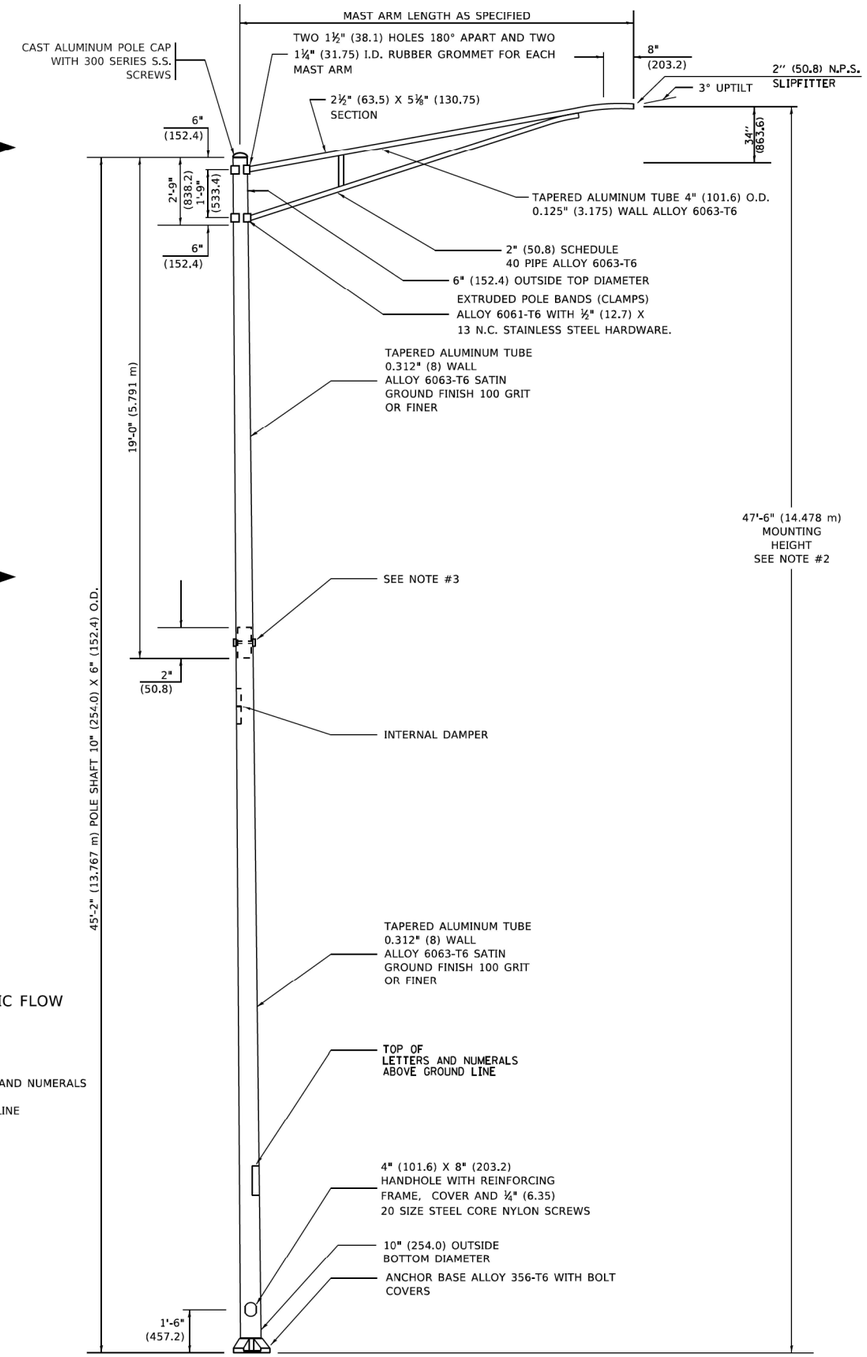

NOTES

1. ALL DIMENSIONS ARE IN INCHES (MILLIMETERS) UNLESS OTHERWISE SHOWN.
2. MOUNTING HEIGHT IS DEFINED AS THE DISTANCE FROM THE CENTERLINE OF THE TENON TO THE BOTTOM OF THE ANCHOR BASE.
3. TWO PIECE SHAFT WILL BE MATCHED MARKED AND INTERCHANGEABLE BETWEEN DIFFERENT UNITS. FIELD DRILLING OF THE HOLES WILL NOT BE ALLOWED.
4. THE LIGHT POLE WILL MEET AASHTO DESIGN CRITERIA AS SPECIFIED.
5. THE INSTALLING CONTRACTOR WILL PROVIDE A UL LISTED GROUNDING CONNECTOR. BURNDY K2C23, T&B SP4DL OR APPROVED EQUAL.
6. LIGHT POLES WILL NOT BE INSTALLED WITHOUT MAST ARMS AND LUMINAIRES.
7. LIGHT POLES WILL BE SET PLUMB ON THE FOUNDATION WITHOUT THE USE OF LEVELING NUTS, WASHERS OR SHIMS.
8. LIGHTING UNIT IDENTIFICATION NUMBERS SHALL BE INSTALLED BEFORE THE LIGHTING UNIT IS ENERGIZED.

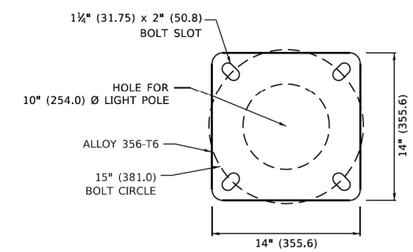

LIGHT POLE BASE PLATE DETAIL

15 INCH (381.0) BOLT CIRCLE

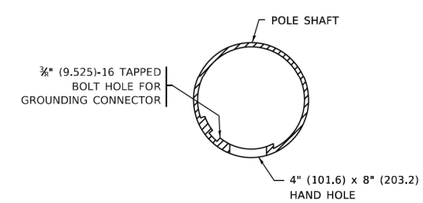

HANDHOLE DETAIL
(N.T.S.)

MODEL: US20 Sht Lighting Detail-05
FILE NAME: pw://gfnet-pw.bentley.com:gfnet-pw-01/Documents/Projects/68096/Project Working/A_CADD/62U83-Contract1/Sheets/0162U83-Sht-Lighting Details

TranSmart 100 S. Wacker Drive Suite 400 Chicago, Illinois 60606	USER NAME = jstarzyk	DESIGNED -	REVISED -	STATE OF ILLINOIS DEPARTMENT OF TRANSPORTATION	US 20: GRACE STREET TO SHALES PARKWAY ALUMINUM LIGHT POLE 47'-6" MOUNTING HEIGHT	F.A.P RTE.	SECTION	COUNTY	TOTAL SHEETS / SHEET NO.
		DRAWN -	REVISED -			345	FAP 345 23 BRIDGE	COOK/KANE	379 / 125
	PLOT SCALE = 0.166667 ' / in.	CHECKED -	REVISED -			BE-400		CONTRACT NO. 62U83	
	PLOT DATE = 3/20/2024	DATE - 3/20/2024	REVISED -		SCALE: N.T.S. SHEET OF SHEETS STA. TO STA.		ILLINOIS	FED. AID PROJECT	

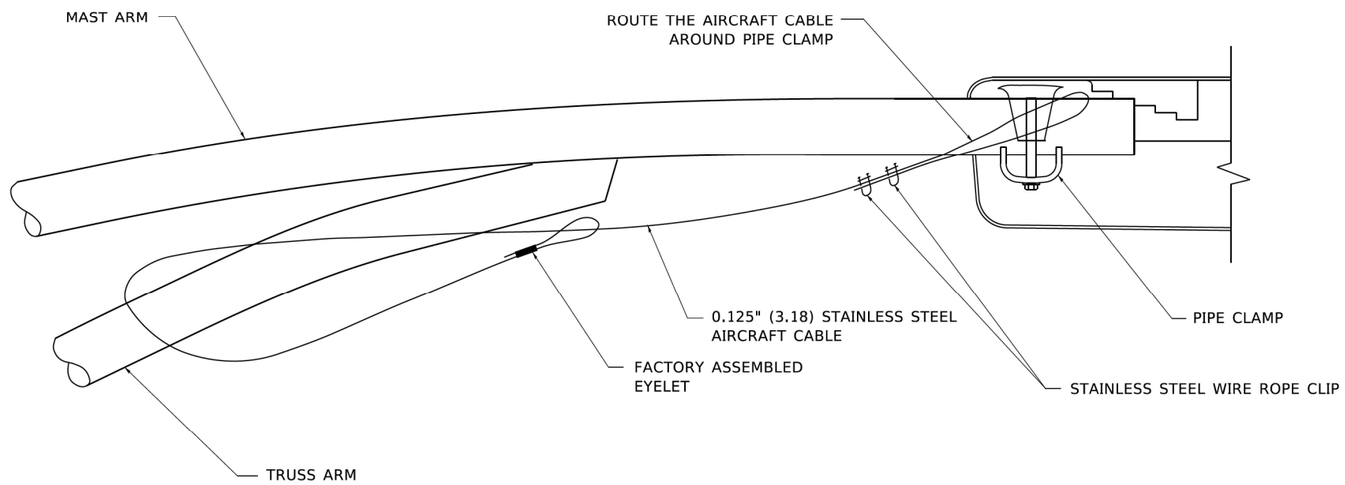

SIDE VIEW (TRUSS ARM)
N.T.S.

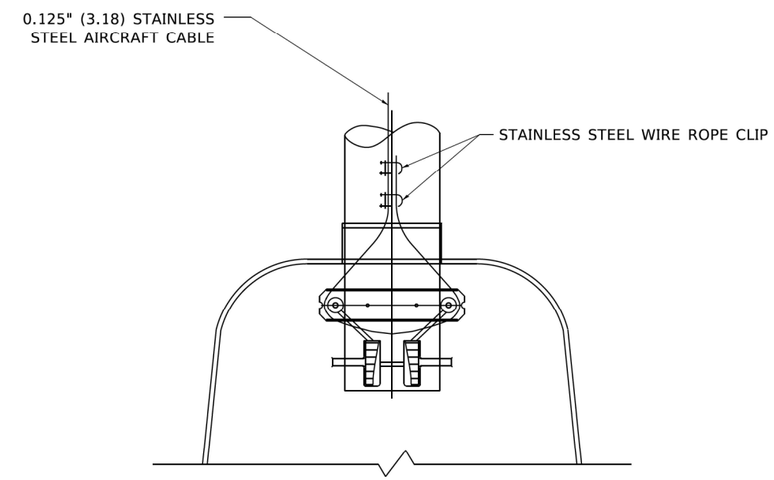

BOTTOM VIEW
N.T.S.

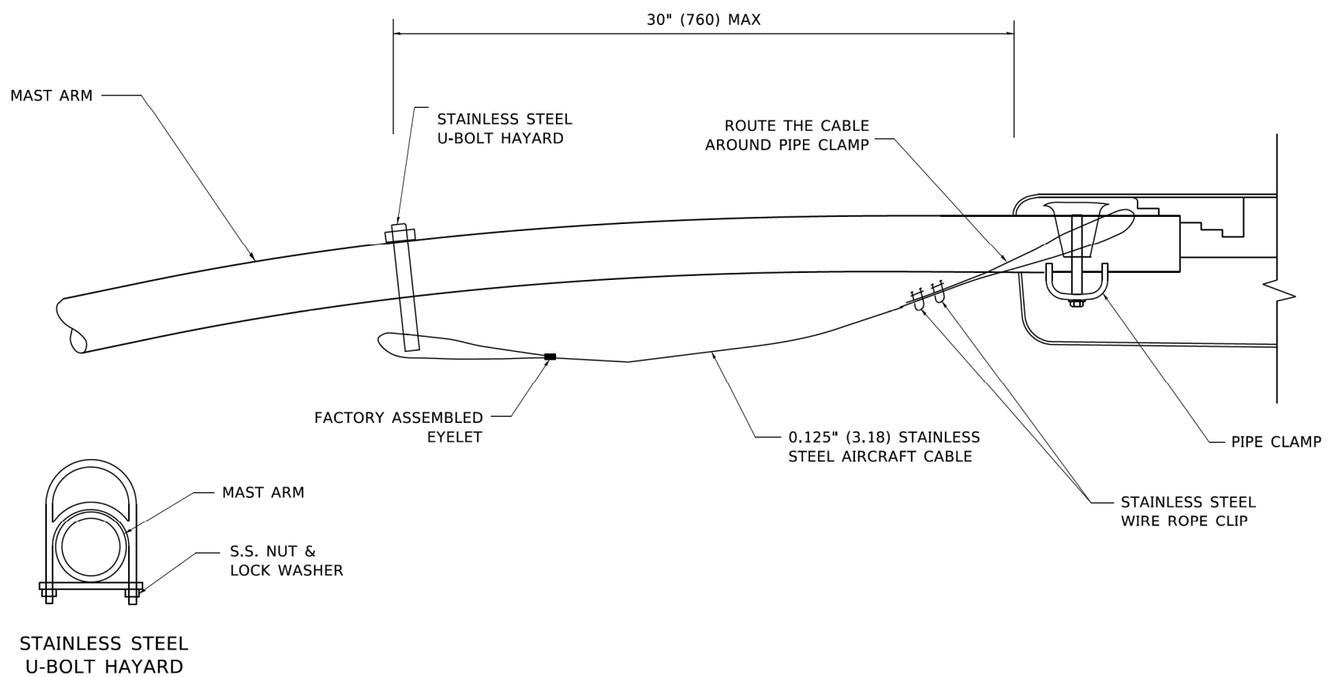

SIDE VIEW (SINGLE MEMBER OR DAVIT ARM)
N.T.S.

NOTES:

1. ALL DIMENSIONS ARE IN MILLIMETERS (INCHES) UNLESS OTHERWISE SHOWN.
2. CONTRACTOR SHALL ADJUST THE WIRE CLIP TO ELIMINATE ANY SLACK FROM THE WIRE ROPE.
3. THE 0.125" (3.18) STAINLESS STEEL AIRCRAFT CABLE SHALL REMAIN VISIBLE FROM THE GROUND LEVEL.
4. THE BREAKING STRENGTH OF THE CABLE SHALL BE 1700 LBS. MIN.

MODEL: US20 Sht Lighting Detail-06
FILE NAME: pw://jfnet-pw.bentley.com:jfnet-pw-01/Documents/Projects/68096/Project Working/A_CADD/62U83-Contract15Sheets/D162U83-Sht-Lighting Details

TranSmart
100 S. Wacker Drive Suite 400
Chicago, Illinois 60606

USER NAME = jstarzyk	DESIGNED -	REVISED -	
	DRAWN -	REVISED -	
PLOT SCALE = 0.166667 ' / in.	CHECKED -	REVISED -	
PLOT DATE = 3/20/2024	DATE - 3/20/2024	REVISED -	

STATE OF ILLINOIS
DEPARTMENT OF TRANSPORTATION

US 20: GRACE STREET TO SHALES PARKWAY
LUMINAIRE SAFETY CABLE ASSEMBLY DETAILS

SCALE: N.T.S. | SHEET OF SHEETS | STA. TO STA.

F.A.P RTE.	SECTION	COUNTY	TOTAL SHEETS	SHEET NO.
345	FAP 345 23 BRIDGE	COOK/KANE	379	126
BE-701		CONTRACT NO. 62U83		
	ILLINOIS	FED. AID PROJECT		

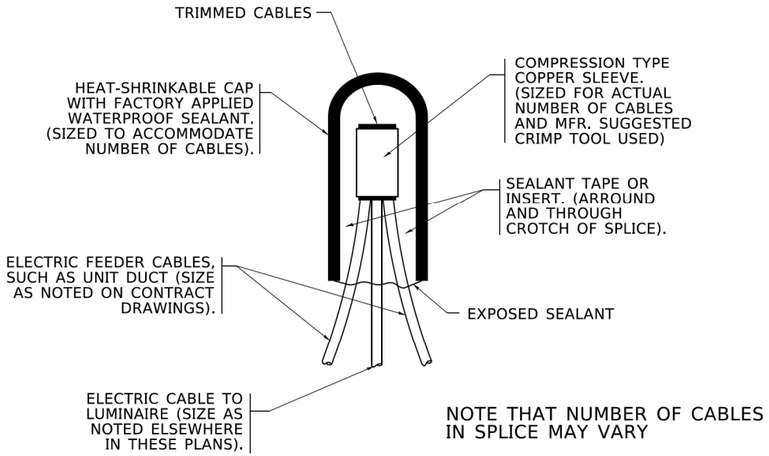

TYPICAL SPLICE DETAIL

N.T.S.

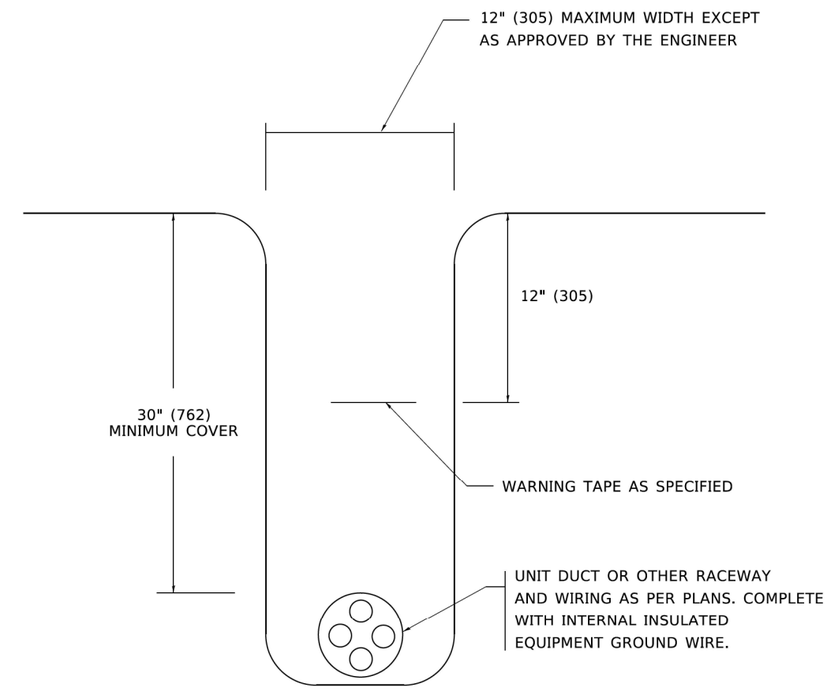

TYPICAL WIRING IN TRENCH DETAIL

N.T.S.

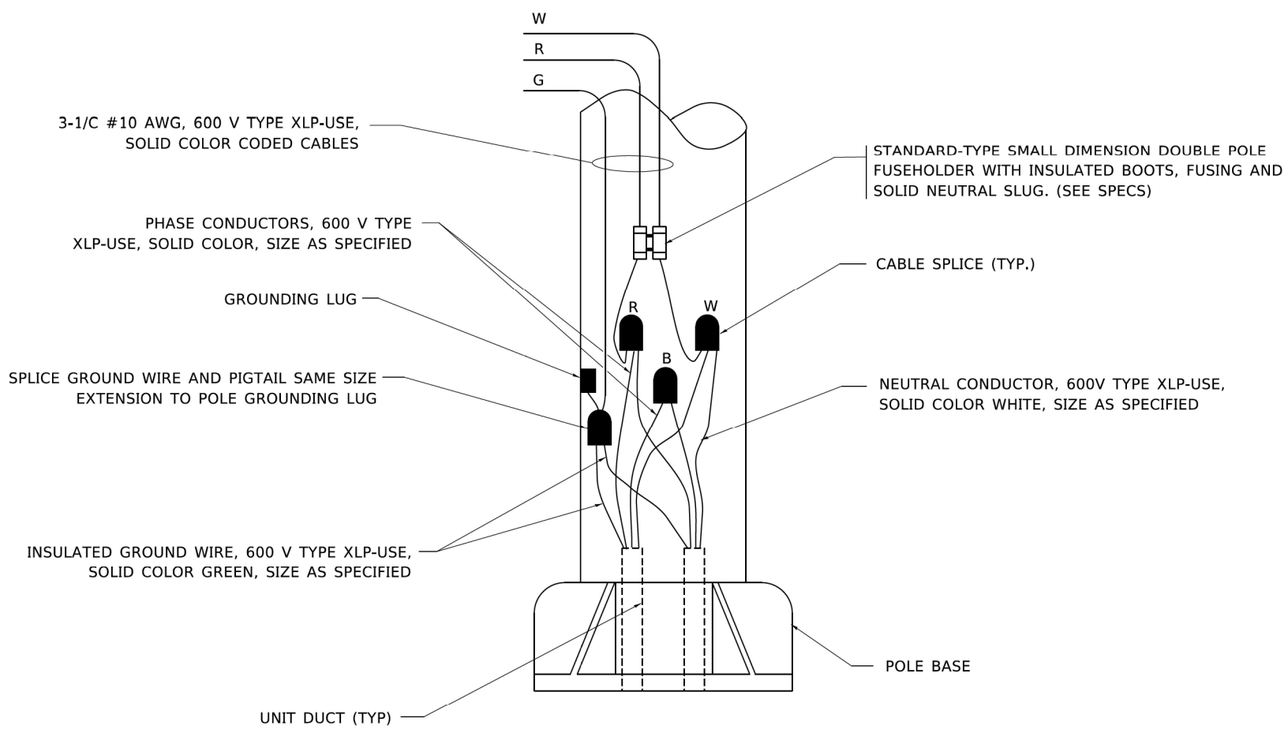

POLE WIRING DETAIL

N.T.S.

MODEL: US20 Sht Lighting Detail-07
FILE NAME: pw://ghet-pw.bentley.com:ghet-pw-01/Documents/Projects/68096/Project Working/A. CADD/62U83-Contract1/Sheets/D162U83-SHT-Lighting Details

TranSmart 100 S. Wacker Drive Suite 400 Chicago, Illinois 60606	USER NAME = jstarzyk	DESIGNED -	REVISED -	STATE OF ILLINOIS DEPARTMENT OF TRANSPORTATION	US 20: GRACE STREET TO SHALES PARKWAY MISCELLANEOUS ELECTRICAL DETAILS	F.A.P RTE.	SECTION	COUNTY	TOTAL SHEETS / SHEET NO.
		DRAWN -	REVISED -			345	FAP 345 23 BRIDGE	COOK/KANE	379 / 127
	PLOT SCALE = 0.166667 ' / in.	CHECKED -	REVISED -			BE-702		CONTRACT NO. 62U83	
	PLOT DATE = 3/20/2024	DATE - 3/20/2024	REVISED -		SCALE: N.T.S. SHEET OF SHEETS STA. TO STA.		ILLINOIS	FED. AID PROJECT	

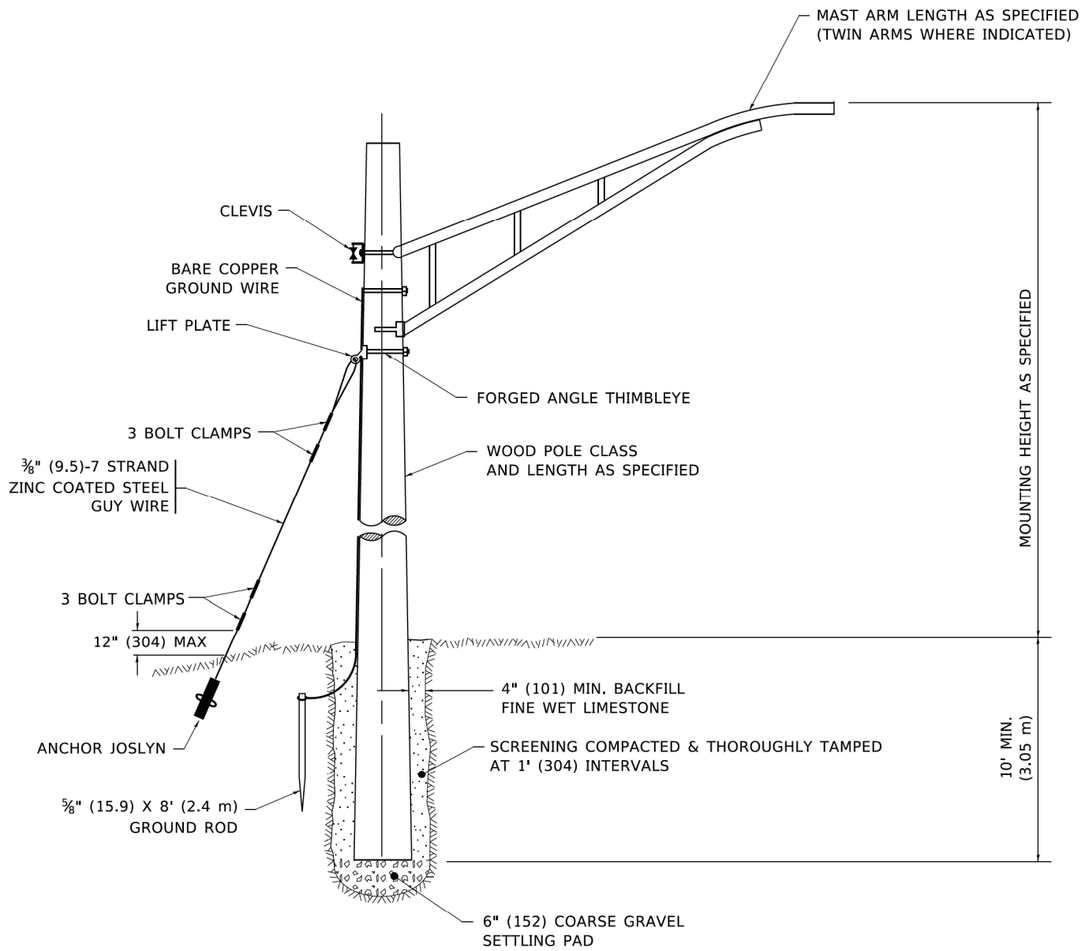

TEMPORARY LIGHT POLE DETAIL

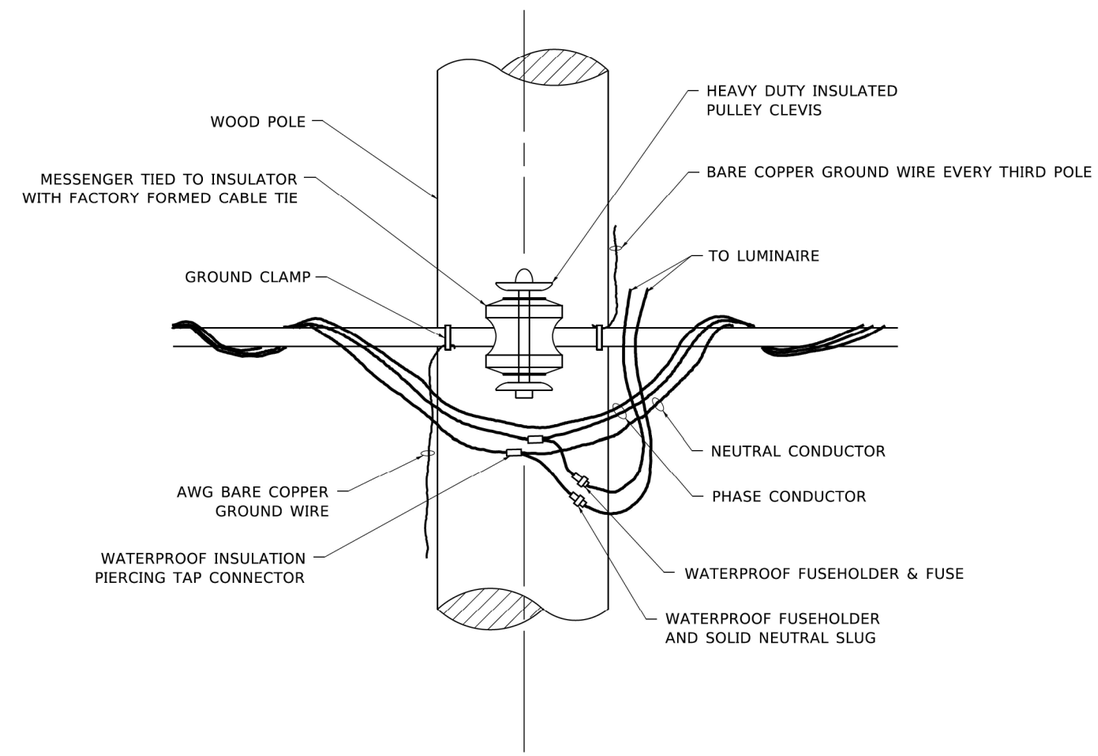

TEMPORARY LIGHT POLE ATTACHMENT DETAIL

NOTE:

1. ALL DIMENSIONS IN INCHES (MILLIMETERS) UNLESS OTHERWISE INDICATED.
2. MAST ARM SHALL BE RATED FOR THE SPECIFIED MOUNTING HEIGHT.

MODEL: US20 Sht Lighting Detail-08
FILE NAME: pw://ghnt-pw.bentley.com:ghnt-pw-01/Documents/Projects/68096/Project Working/A_CADD/62U83-Contract1/Sheets/0162U83-Sht-Lighting Details

TranSmart
100 S. Wacker Drive Suite 400
Chicago, Illinois 60606

USER NAME = jstarzyk	DESIGNED -	REVISED -	
	DRAWN -	REVISED -	
PLOT SCALE = 0.166667 ' / in.	CHECKED -	REVISED -	
PLOT DATE = 3/20/2024	DATE - 3/20/2024	REVISED -	

STATE OF ILLINOIS
DEPARTMENT OF TRANSPORTATION

US 20: GRACE STREET TO SHALES PARKWAY
TEMPORARY LIGHT POLE DETAILS

SCALE: N.T.S. | SHEET OF SHEETS | STA. TO STA.

F.A.P RTE.	SECTION	COUNTY	TOTAL SHEETS	SHEET NO.
345	FAP 345 23 BRIDGE	COOK/KANE	379	128
BE-800		CONTRACT NO. 62U83		
		ILLINOIS	FED. AID PROJECT	

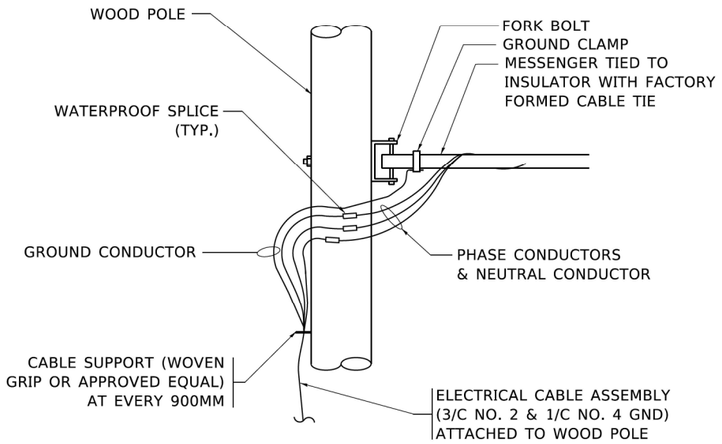

AERIAL CABLE CONNECTION DETAIL

N.T.S.

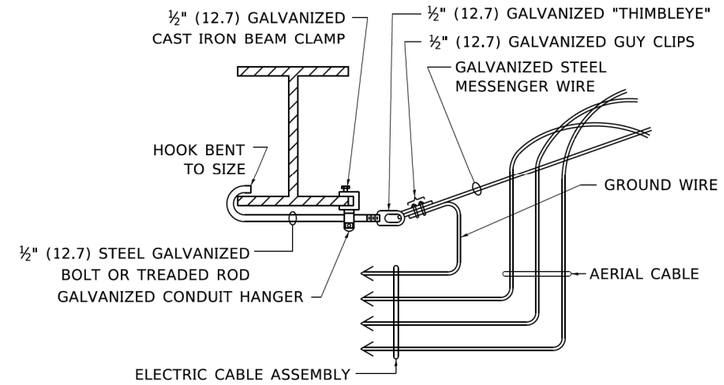

AERIAL CABLE ATTACHED TO STRUCTURE

NOT TO SCALE

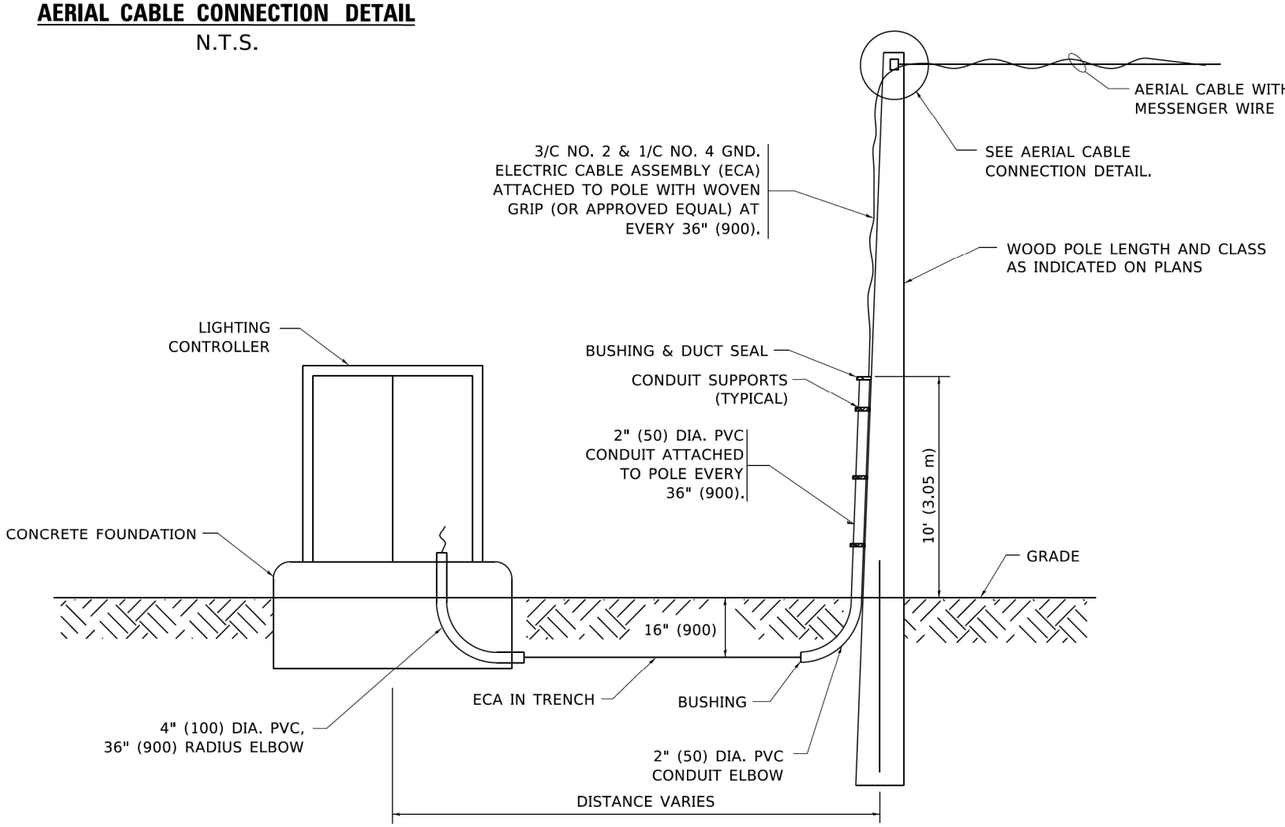

WOOD POLE TO LIGHTING CONTROLLER WIRING CONNECTION DETAIL

N.T.S.

NOTES:

1. ALL DIMENSIONS IN INCHES (MILLIMETERS) UNLESS OTHERWISE INDICATED.
2. SEE PROPOSED LIGHTING PLAN FOR CONDUIT, CABLE AND ROUTING.
3. THE CONTRACTOR SHALL PROVIDE INTERMEDIATE SUPPORTS TO MAINTAIN MINIMUM CLEARANCES. REFER TO AERIAL AERIAL CABLE ATTACHED TO STRUCTURE DETAIL.
4. COST OF SPLICES AND MOUNTING HARDWARE SHALL BE INCLUDED IN THE UNIT PRICE FOR AERIAL CABLE.

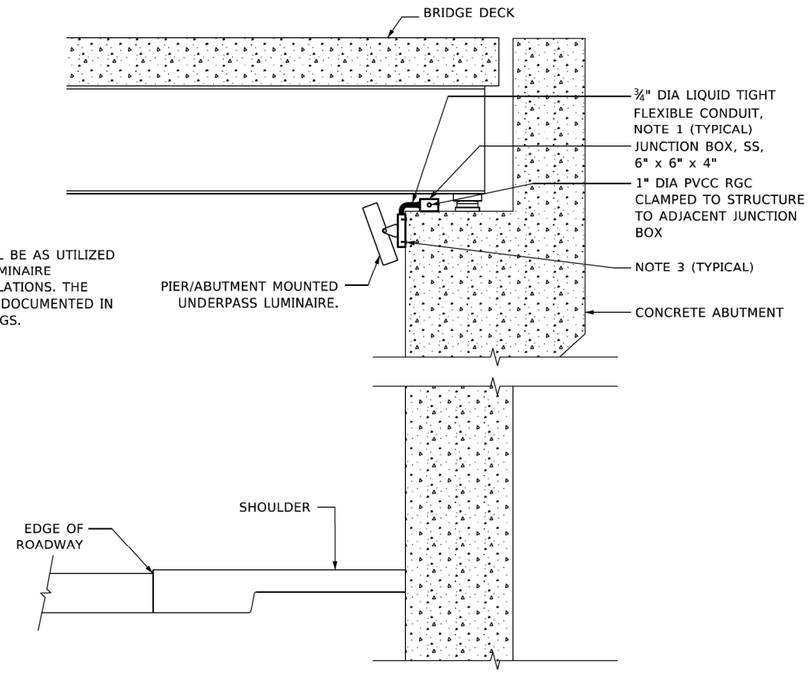

NOTE:

LUMINAIRE TILT SHALL BE AS UTILIZED IN THE APPROVED LUMINAIRE PHOTOMETRIC CALCULATIONS. THE TILT ANGLE MUST BE DOCUMENTED IN THE RECORD DRAWINGS.

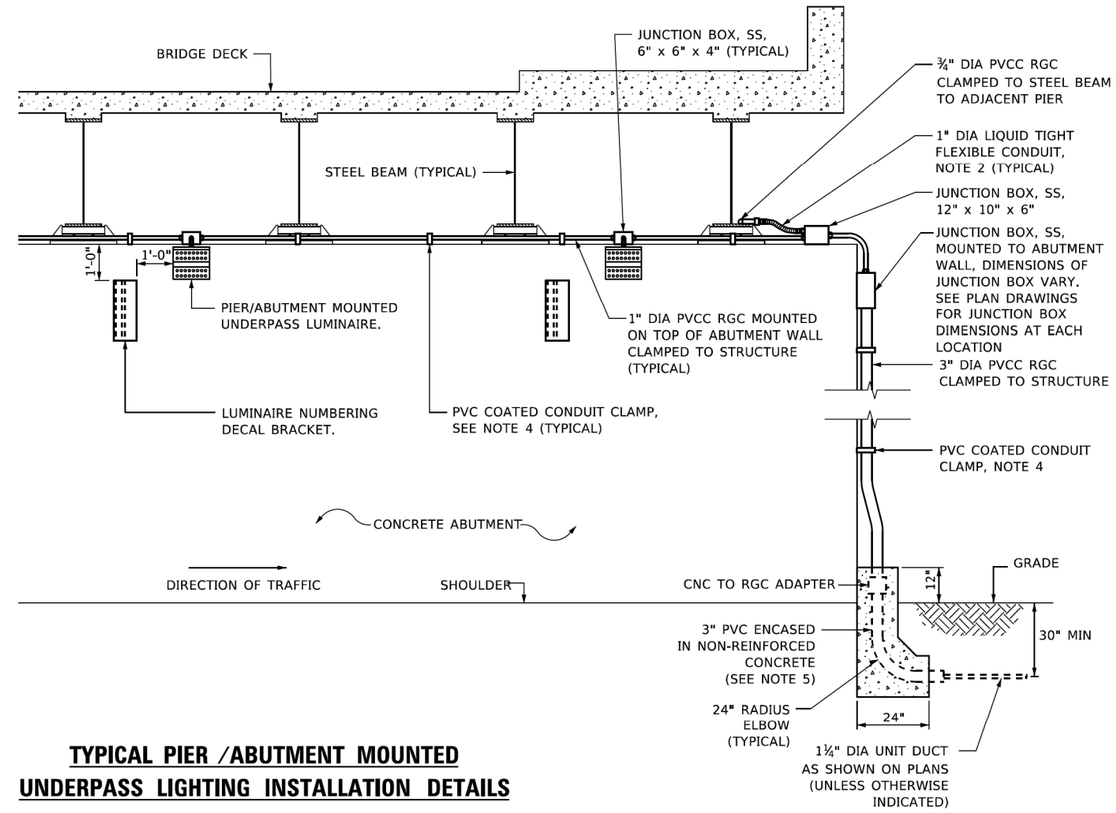

TYPICAL PIER /ABUTMENT MOUNTED UNDERPASS LIGHTING INSTALLATION DETAILS

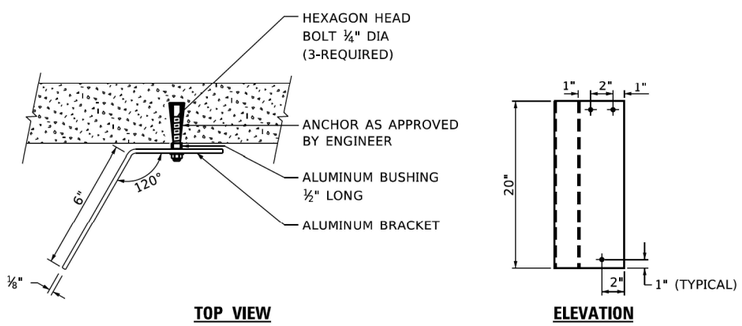

TOP VIEW **ELEVATION**

LUMINAIRE NUMBERING DECAL BRACKET

NOT TO SCALE

PVC COATED CONDUIT BEAM CLAMP

NOT TO SCALE

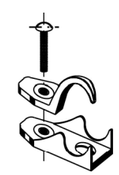

PVC COATED CONDUIT CLAMP

NOT TO SCALE

NOTES:

1. LIQUID TIGHT FLEXIBLE METAL CONDUIT, MAXIMUM LENGTH 6'-0", TYPICAL FOR EACH INSTANCE AS SHOWN. PROVIDE PVC COATED RIGID GALVANIZED STEEL CONDUIT AS REQUIRED NOT TO EXCEED 6'-0" OF FLEXIBLE LIQUID TIGHT METAL CONDUIT. LIQUID TIGHT FLEXIBLE METAL CONDUIT WILL BE INCLUDED IN THE COST OF THE CONDUIT ATTACHED TO STRUCTURE, OF THE CORRESPONDING DIA., GALVANIZED STEEL, PVC COATED PAY ITEM EXCEPT THAT THE COST OF THE " DIA. RIGID STEEL CONDUIT AND " DIA. FLEXIBLE CONDUIT SHALL BE INCLUDED IN THE LUMINAIRE INSTALLATION.
2. SEE UNDERPASS LIGHTING PLANS FOR INSTALLATION LOCATION OF UNDERPASS LIGHTING LUMINAIRES.
3. UNDERPASS LUMINAIRE MOUNTED TO FACE OF PIER OR ABUTMENT WALL WITH ½" ALUMINUM SPACERS. MOUNTING HEIGHT OF 1" BELOW THE TOP OF PIER OR ABUTMENT WALL TYPICAL FOR ALL PIER/ABUTMENT MOUNTED UNDERPASS LUMINAIRES UNLESS OTHERWISE NOTED.
4. EXPANSION ANCHOR, POWDER ACTUATED FASTENERS WILL NOT BE ALLOWED. EXPANSION ANCHOR MUST BE SIZED IN ACCORDANCE WITH MANUFACTURERS REQUIREMENTS.
5. SECURE THE CONDUIT WITH PVC COATED CONDUIT CLAMPS OR CONDUIT BEAM CLAMPS AS SHOWN AT 5'-0" INTERVALS FOR LATERALS AND WITHIN 2'-0" MAXIMUM FROM ANY JUNCTION BOX, FLEXIBLE CONDUIT, OR CHANGE IN DIRECTION. ALL PVC COATED CONDUIT CLAMPS OR BEAM CLAMPS SHALL BE INCLUDED WITH THE COST OF THE "CONDUIT ATTACHED TO STRUCTURE, OF THE CORRESPONDING DIA., GALVANIZED STEEL, PVC COATED" PAY ITEM.
6. THE CONCRETE ENCASED CONDUIT TRANSITION SHALL BE INCLUDED IN THE COST OF THE GALVANIZED RIGID STEEL CONDUIT PAY ITEMS.
7. ALL CONDUIT ATTACHED TO STRUCTURE SHALL BE PVC COATED RIGID STEEL CONDUIT (PVCC RGC) TYPICAL.

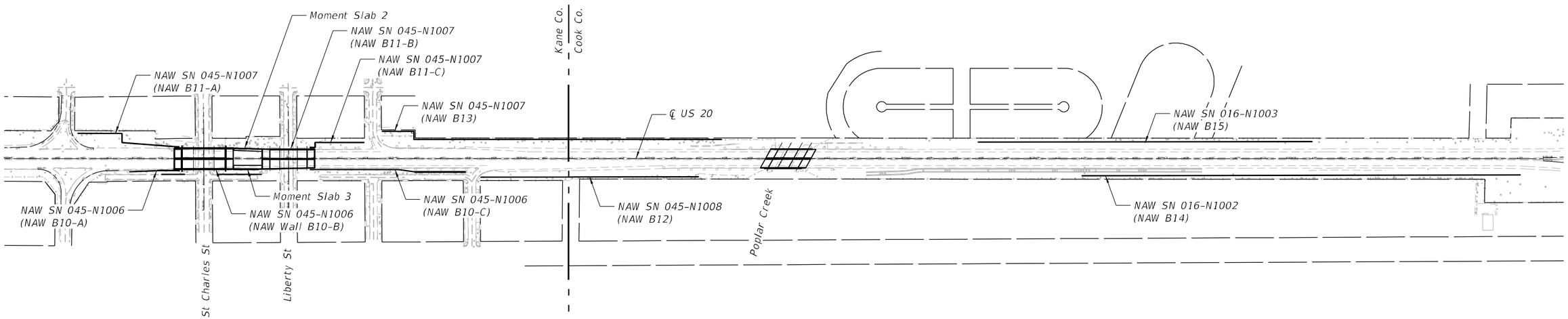

MODEL: Sht 3
FILE NAME: pw://gfnet-pw.bentley.com:gfnet-pw-01/Documents/Projects/68096/Project Working/A_CADD/62U83-Contract1/Sheets/D162U83-sht-StructKeyPlan.dgn

3/20/2024 4:30:36 PM

GANNETT FLEMING

USER NAME = jstarzyk	DESIGNED - LAM	REVISED -	
	CHECKED - DF	REVISED -	
PLOT SCALE = 2.0000 ' / in.	DRAWN - LAM	REVISED -	
PLOT DATE = 3/20/2024	CHECKED - DF	REVISED -	

STATE OF ILLINOIS
DEPARTMENT OF TRANSPORTATION

STRUCTURE KEY PLAN

SHEET 1 OF 1 SHEETS

F.A.P. RTE.	SECTION	COUNTY	TOTAL SHEETS	SHEET NO.
345	FAP 345-23-BR	KANE	379	131
		CONTRACT NO. 62U83		
		ILLINOIS	FED. AID PROJECT	

Benchmark: Cut "Γ" on NW corner of Pier 1 on E side of St. Charles St. & 38 feet N ℄ of US 20.
Elev. = 737.093

Existing Structure: S.N. 045-0006 was originally constructed in 1959 as F.A. Route 6, Project U-613(3). In 1986 the bridge was widened, expansion joints reconstructed, overlay placed, and bearings replaced. Various repairs were made to the structure in 1998, 2003 and 2011. The existing structure is a 3-span hinged steel WF beam bridge supported by concrete stub abutments on piles and multi-column concrete piers on spread footings. The bridge measures 160'-2" from back-to-back of abutments and has a variable out-to-out deck width of 75'-5¾" to 78'-10¼".

Traffic shall be maintained during construction utilizing staged construction.

Salvage: None

SCOPE OF WORK

1. Remove existing superstructure and abutments.
2. Widen existing piers, remove and replace pier caps.
3. Construct new integral abutments.
4. Replace hinge beam system with continuous beams and updated beam spacing.
5. Replace concrete deck.
6. Remove and replace approach slabs.
7. Repair piers with formed concrete repair and epoxy crack injection.
8. Remove and reconstruct slopewalls.

STATION 417+77.67
BUILT 202_ BY
STATE OF ILLINOIS
F.A.P. RTE. 345 - SEC 345-23-BR
LOADING HL-93
STRUCTURE NO. 045-0006

NAME PLATE

See Std. 515001

Existing Name Plate shall be cleaned and relocated next to new Name Plate. Cost included with Name Plates.

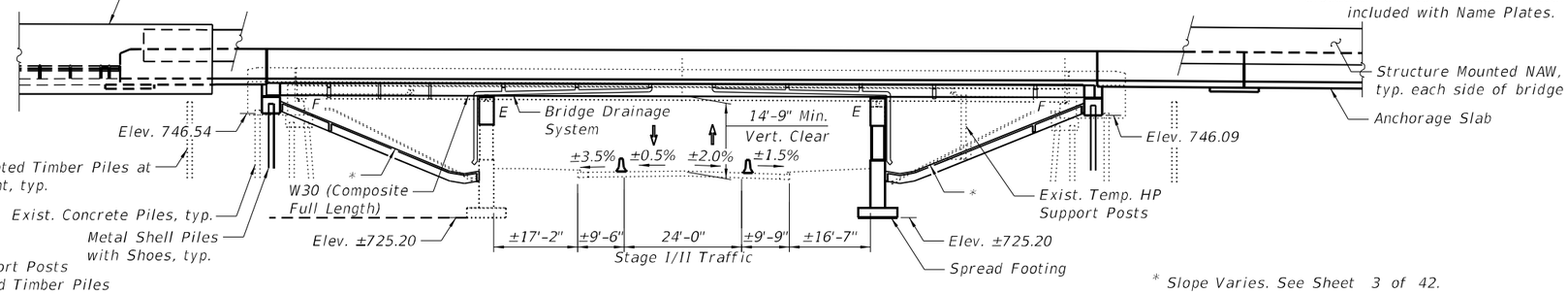

* Slope Varies. See Sheet 3 of 42.

ELEVATION

LEGEND

- Soil Boring
- Exist. HP Support Posts
- Exist. Creosoted Timber Piles
- Exist. Water Main
- Exist. Sanitary Sewer
- Exist. Storm Sewer
- Exist. Fence
- Exist. Cable TV
- Exist. Electric
- Exist. Gasline
- Exist. Telephone
- Prop. Storm Sewer
- NAW Noise Abatement Wall
- Exist. ROW

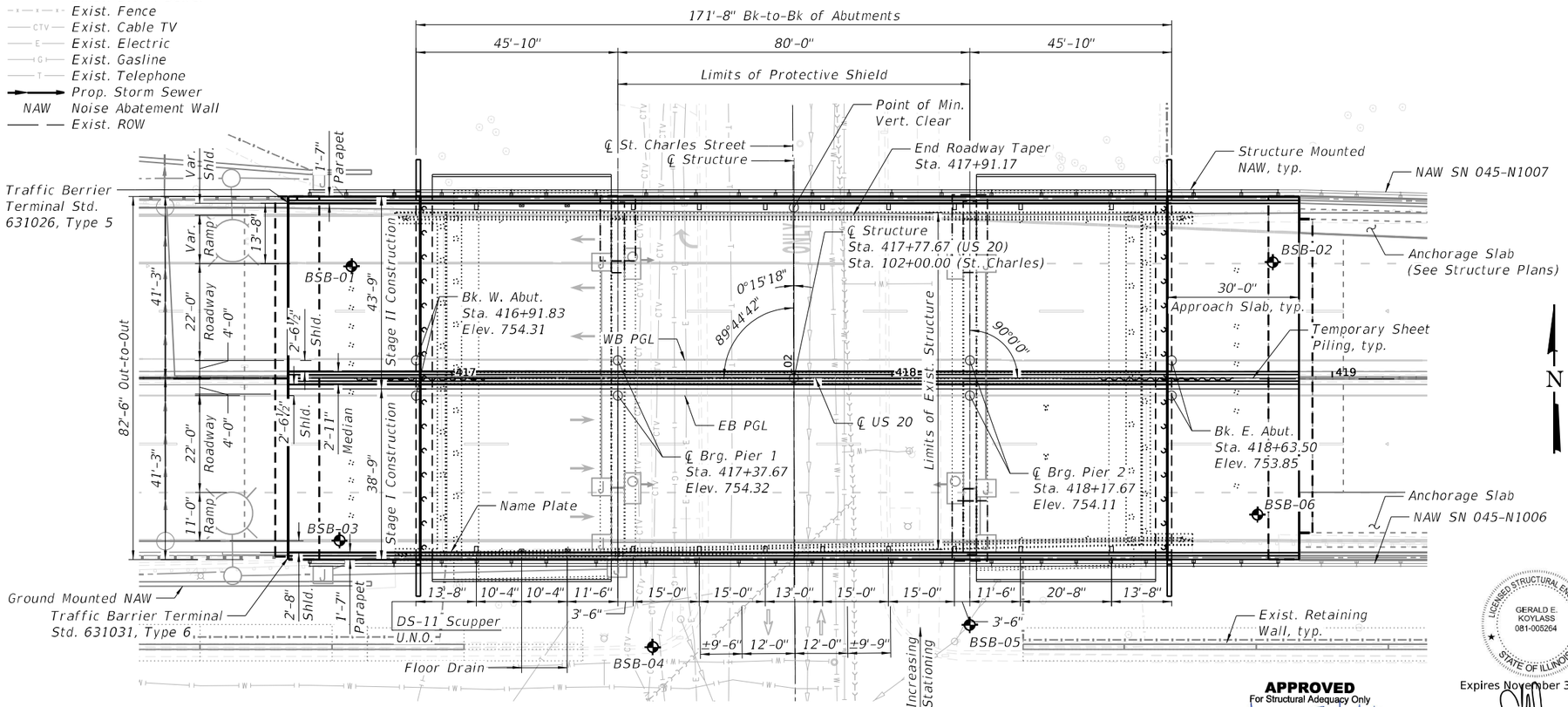

PLAN

DESIGN SPECIFICATIONS

2020 AASHTO LRFD Bridge Design Specifications, 9th Edition
2006 Seismic Retrofitting Manual for Highway Structures: Part 1 - Bridges (FHWA-HRT-06-032)

DESIGN STRESSES

EXISTING UNITS (ORIGINAL CONST.)

fc= 1,400 psi (Concrete)
fs= 20,000 psi (Reinforcement)

EXISTING UNITS (1986 CONST.)

f'c= 3,500 psi
fy= 60,000 psi (Reinforcement)

FIELD UNITS (NEW CONST.)

f'c= 3,500 psi (Substructure)
f'c= 4,000 psi (Superstructure)
fy= 50,000 psi (M270 Gr. 50 - Structual Steel & NAW Posts)
fy= 36,000 psi (M270 Gr. 36 - Other)
fy= 60,000 psi (Reinforcement)

PRECAST UNITS

f'c= 4,500 psi (Precast Concrete)
fy= 60,000 psi (Reinforcement)
fy= 65,000 psi (Welded Wire Reinforcement)

SEISMIC DATA

Seismic Retrofit Category (SRC) = A
Design Spectral Acceleration at 1.0 sec. (SD1) = 0.085g
Design Spectral Acceleration at 0.2 sec. (SDS) = 0.151g
Soil Site Class = D
Performance Level = PL1

LOADING HL-93

Allow 50#/sq. ft. for future wearing surface

DESIGN LOADS

Struct. Mounted NAW Unfactored
Dead Load: 65 psf
Strength III or V Wind: 35 psf
Service I Wind: 15 psf

NOTE:

1. Up to ¼ inch may be ground off the bridge deck and the bridge approach slabs. The elevations shown in plan represent elevations after grinding.

R8E/R9E, 3 P.M.

Structure Location

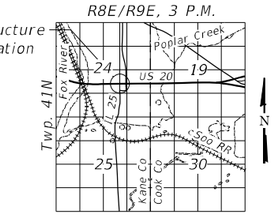

LOCATION SKECTH

GENERAL PLAN & ELEVATION
US ROUTE 20 OVER ST. CHARLES ST.
F.A.P. RTE. 345 - SEC 345-23-BR
KANE COUNTY
STATION 417+77.67
STRUCTURE NO. 045-0006

LICENSED STRUCTURAL ENGINEER GERALD E. KOYLASS 081-005264 STATE OF ILLINOIS
Expires November 30, 2024

APPROVED
For Structural Adequacy Only
Engineer of Bridges & Structures
Date: 5/9/2024

BURNS McDONNELL	USER NAME = eckay	DESIGNED - ECK	REVISED -	STATE OF ILLINOIS DEPARTMENT OF TRANSPORTATION		F.A.P. RTE.	SECTION	COUNTY	TOTAL SHEETS / SHEET NO.
		CHECKED - GEK	REVISED -			345	FAP 345-23-BR	KANE	379 / 132
	PLOT SCALE = 30.0000 ' / in.	DRAWN - BAH	REVISED -					CONTRACT NO. 62U83	
	PLOT DATE = 5/9/2024	CHECKED - ECK	REVISED -		SHEET 1 OF 42 SHEETS		ILLINOIS	FED. AID PROJECT	

MODEL: Default
FILE NAME: pw://gfnet-pw.bentley.com:gfnet-pw-01/Documents/Projects/68096/Project Working/A_CADD/62U83-Contract1/Sheets/045-0006/0450006-62U83-001-GPE
5/9/2024 3:58:22 PM

INDEX OF SHEETS

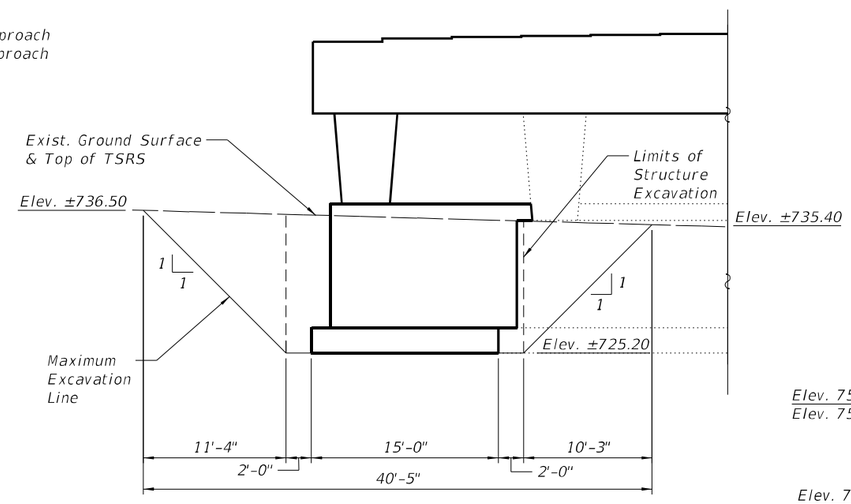

VIEW A-A

(Looking East)

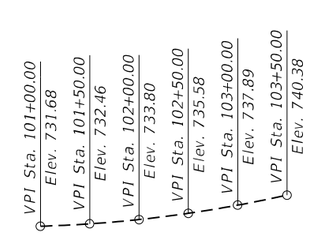

PROFILE GRADE

(Along ℄ St. Charles Street)

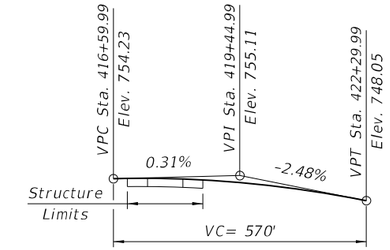

*PROFILE GRADE

(Along EB & WB PGL US 20)
*The profile grade shows the final elevation after gridning.

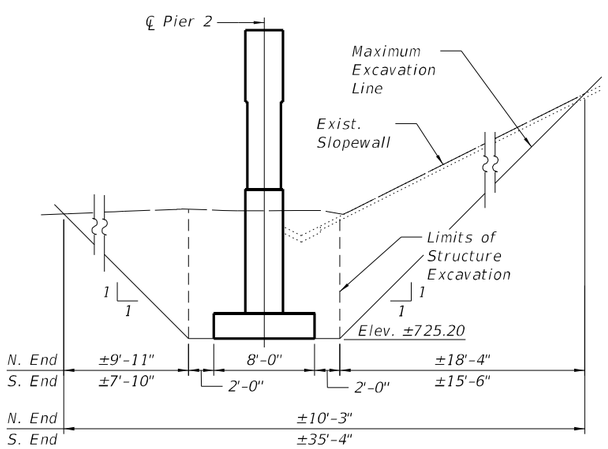

PIER 2 EXCAVATION LIMITS

(Looking North)

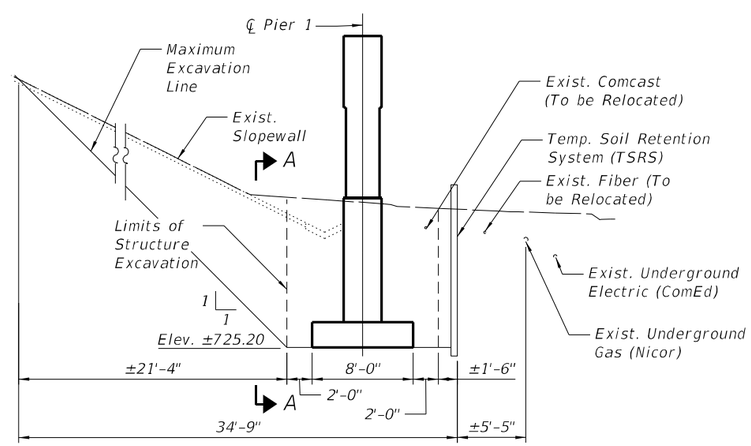

PIER 1 EXCAVATION LIMITS & TSRS

(Looking North)

A cantilevered sheet piling design does not appear feasible and additional members or other retention systems may be necessary. The Contractor shall submit a temporary soil retention system design including plan details and calculations for review and acceptance by the Engineer.

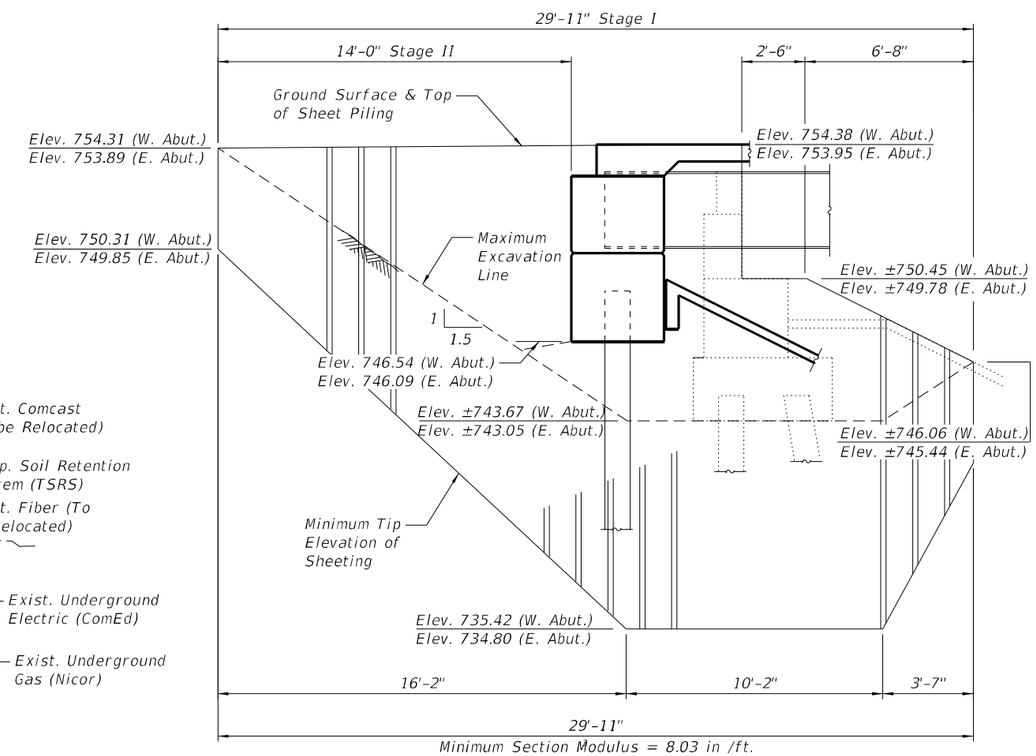

Minimum Section Modulus = 8.03 in /ft.

TEMPORARY SHEET PILING AT ABUTMENTS

If the Contractor chooses to alter the temporary cantilevered sheet piling design requirements shown on the plans, a design submittal including plan details and calculations will be required for review and acceptance by the Engineer

GENERAL NOTES

1. Fasteners shall be ASTM F3125 Grade A325 Type 1, mechanically galvanized bolts in painted areas. Bolts ⅞ in. Ø, holes 15/16 in. Ø, unless otherwise noted.

2. Calculated weight of Structural Steel = 402,240 Pounds (M270 Gr. 50)
   = 42,070 Pounds (M270 Gr. 36)

3. No field welding is permitted except as specified in the contract documents.

4. Reinforcement bars designated (E) shall be epoxy coated.

5. Plan dimensions and details relative to existing structures are subject to nominal construction variations. The Contractor shall field verify existing dimensions and details affecting new construction and make necessary approved adjustments prior to construction or ordering of materials. Such variations shall not be cause for additional compensation for a change in scope of the work, however, the Contractor will be paid for the quantity actually furnished at the unit price bid for the work.

6. Bearing seat surfaces shall be constructed or adjusted to the designated elevations within a tolerance of ⅛ inch (0.01 ft.). Adjustment shall be made either by grinding the surface or by shimming the bearings.

7. The existing structural steel coating contains lead. The Contractor shall take appropriate precautions to deal with the presence of lead on this project.

8. The Organic Zinc Rich Primer / Epoxy / Urethane Paint System shall be used for painting of new structural steel except where otherwise noted. The entire system shall be shop applied, with the exception of the exterior surface and the bottom of the bottom flange of fascia beams, masked off connection surfaces, field installed fasteners and damaged areas shall be touched up in the field. The color of the final finish coat for all interior steel surfaces shall be Gray, Munsell No. 5B 7/1. The color of the final finish coat for the exterior and bottom flange of the fascia beams shall be Reddish Brown, Munsell No. 2.5YR 3/4.

9. Removal of existing abutments, bearings, superstructure, approach piles (as needed), slopewall, temporary cribbing at abutments, and temporary HP support posts included in cost of Removal of Existing Structures No. 1. Existing Piers are to remain and to be re-used.

10. Slipforming of the outside parapets is not allowed. Slipforming of the median barrier is allowed.

11. Slope wall shall be reinforced with welded wire fabric, 6 in. x 6 in. - W4.0 x W4.0, weighing 58 lbs. per 100 sq. ft.

12. Up to ¼ inch to be ground off the bridge deck and the bridge approach slab. The Profile Grade shows the final grade after grinding.

TOTAL BILL OF MATERIAL

ITEM	UNIT	SUPER	SUB	TOTAL
Removal Of Existing Structures No. 1	Each	1	-	1
Concrete Removal	Cu. Yd.	-	125.7	125.7
Protective Shield	Sq. Yd.	686	-	686
Structure Excavation	Cu. Yd.	-	919.0	919.0
Floor Drains	Each	4	-	4
Concrete Structures	Cu. Yd.	-	340.5	340.5
Concrete Superstructure	Cu. Yd.	626.9	-	626.9
Protective Coat	Sq. Yd.	2,532	-	2,532
Concrete Superstructure (Approach Slab)	Cu. Yd.	233.0	-	233.0
Furnishing And Erecting Structural Steel	L. Sum	0.49	-	0.49
Stud Shear Connectors	Each	9,765	-	9,765
Reinforcement Bars, Epoxy Coated	Pound	254,030	47,670	301,700
Bar Splicers	Each	698	140	838
Slope Wall 4 Inch	Sq. Yd.	-	900	900
Furnishing Metal Shell Piles 12" X 0.250"	Foot	-	826	826
Driving Piles	Foot	-	826	826
Test Pile Metal Shells	Each	-	2	2
Pile Shoes	Each	-	30	30
Name Plates	Each	1	-	1
Elastomeric Bearing Assembly, Type I	Each	30	-	30
Anchor Bolts, 1"	Each	60	-	60
Anchor Bolts, 1¼"	Each	60	-	60
Temporary Sheet Piling	Sq. Ft.	-	760	760
Temporary Soil Retention System	Sq. Ft.	-	324	324
Drainage System for Structures	L. Sum.	1	-	1
Granular Backfill For Structures	Cu. Yd.	-	267.0	267.0
Geocomposite Wall Drain	Sq. Yd.	-	138	138
Pipe Underdrains For Structures 4"	Foot	-	198	198
Noise Abatement Wall Anchor Rod Assembly	Each	48	-	48
Bridge Deck Grooving (Longitudinal)	Sq. Yd.	1,662	-	1,662
Bar Terminators	Each	474	800	1,274
Structural Repair Of Concrete (Depth Equal To Or Less Than 5 Inches)	Sq. Ft.	-	14	14
Deck Slab Repair (Partial)	Sq. Yd.	10	-	10
Drainage Scuppers, DS-11	Each	18	-	18
Diamond Grinding (Bridge Section)	Sq. Yd.	1,746	-	1,746

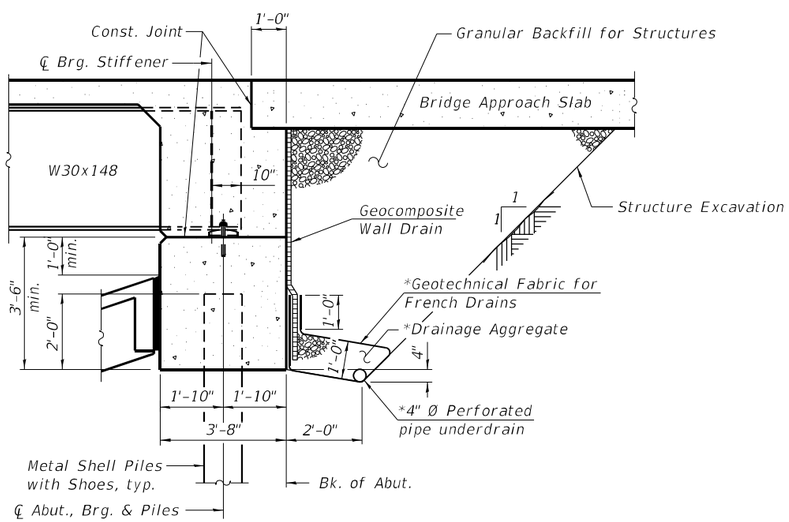

SECTION THRU INTEGRAL ABUTMENT

(Horiz. dim. @ Rt. ∠'s)

*Included in cost of Pipe Underdrains for Structures

All drainage system components shall extend to 2'-0" from the end of each wingwall except an outlet pipe shall be extended until intersecting with the side slopes. The pipes shall drain into concrete headwalls (See Article 601.05 of the Standard Specifications and Highway Standards 601101).

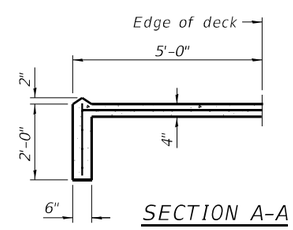

SECTION A-A

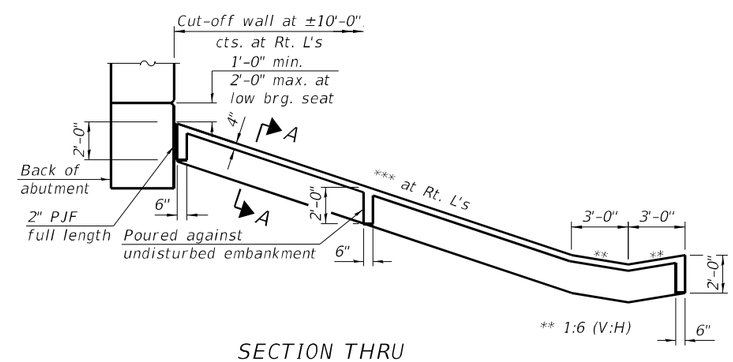

SECTION THRU CONCRETE SLOPEWALL

*** West Abut: Var. 1:2.75 to 1:28 (V:H) from N. to S.
East Abut: Var. 1:2.64 to 1:36 (V:H) from N. to S.

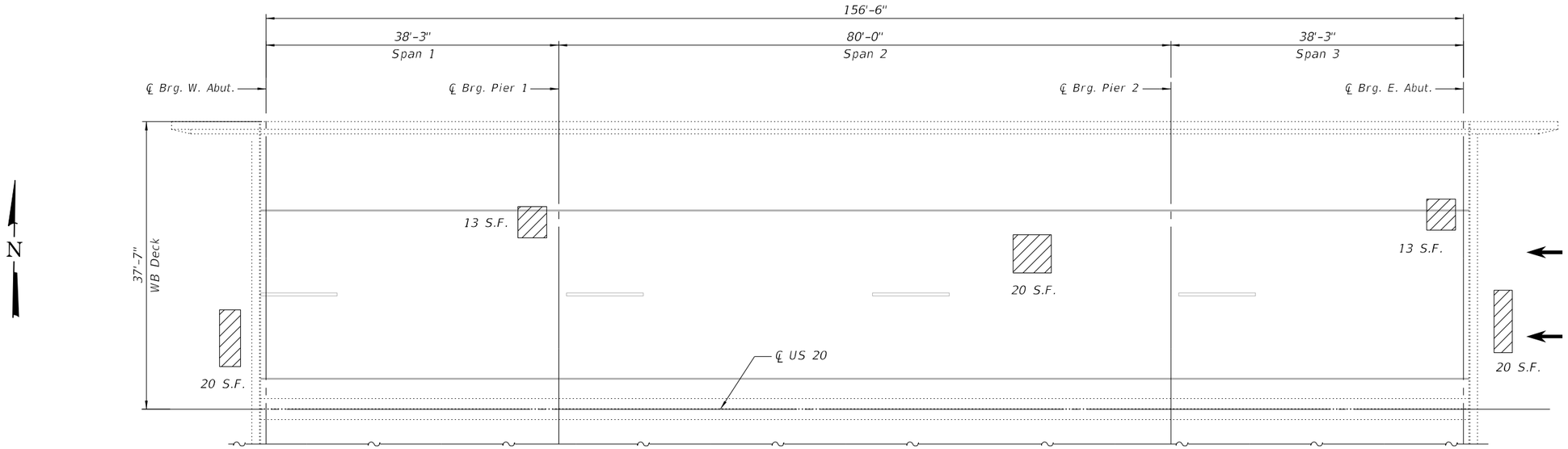

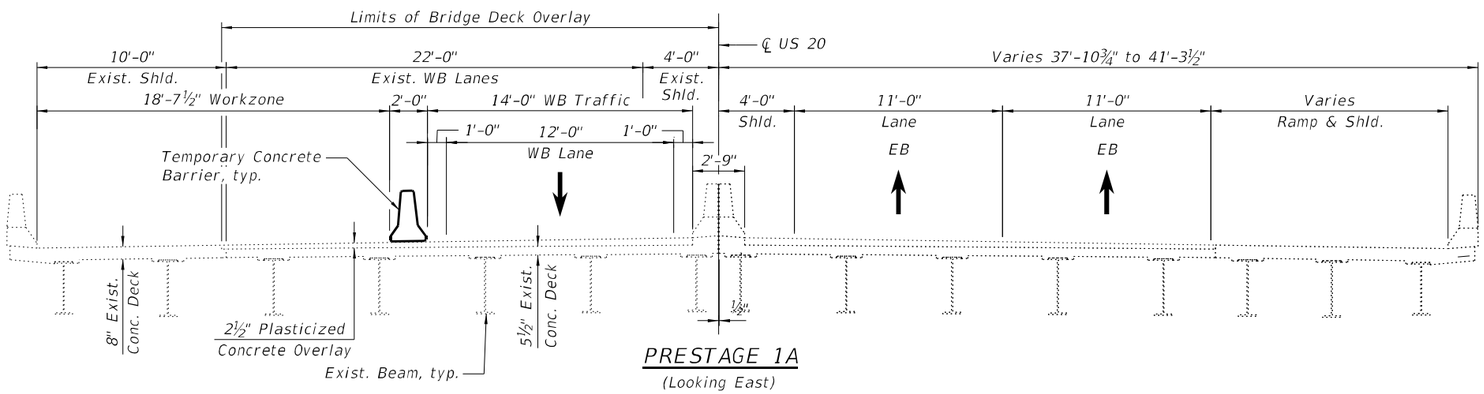

PRESTAGE 1A

(Looking East)

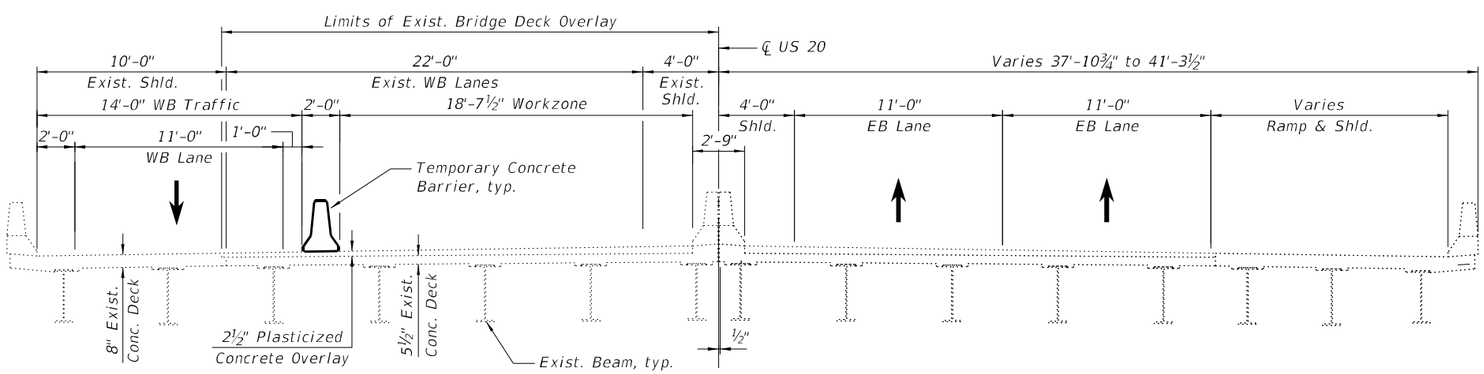

PRESTAGE 1B

(Looking East)

NOTES:

1. See MOT plans for pre-stage traffic configuration during deck and approach patching operations.
2. The quantity of deck repair includes repairs to the approach slabs and existing deck based on a 2021 visual inspection. The area and locations shall be determined by the engineer at the time of construction.
3. HMA removal required for repairs on the approach slab will not be measured for payment separately, but shall be included in the cost of Deck Slab Repar (Partial).

LEGEND

Deck Slab Repair (Partial)

S.F. Square Feet

BILL OF MATERIAL

Item	Unit	Total
Deck Slab Repair (Partial)	Sq. Yd.	10.0

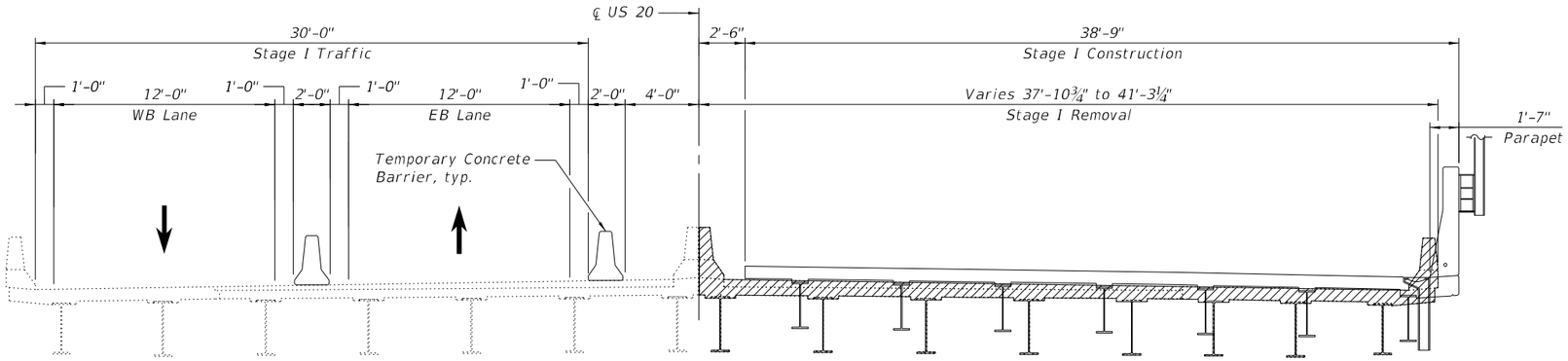

STAGE I CROSS SECTION

(Looking East)

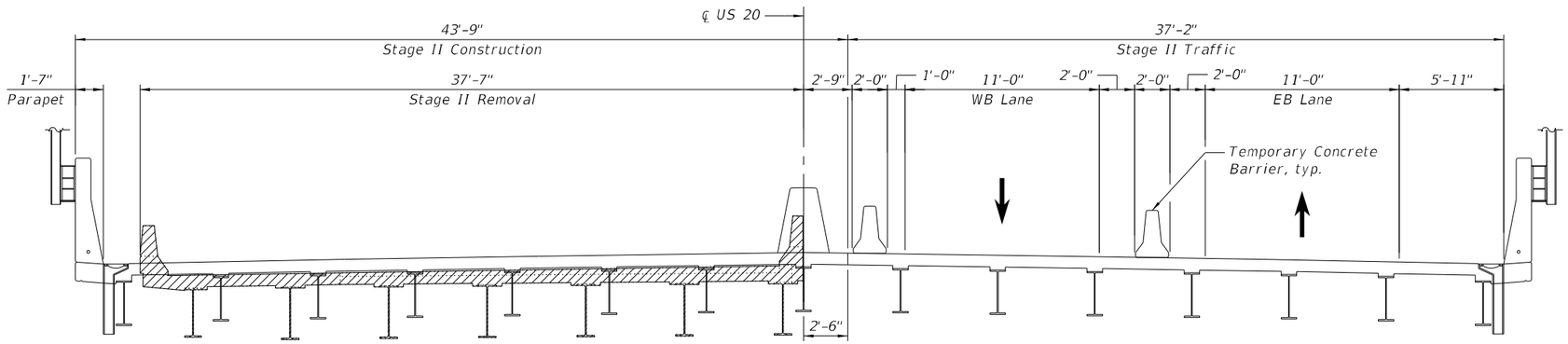

STAGE II CROSS SECTION

(Looking East)

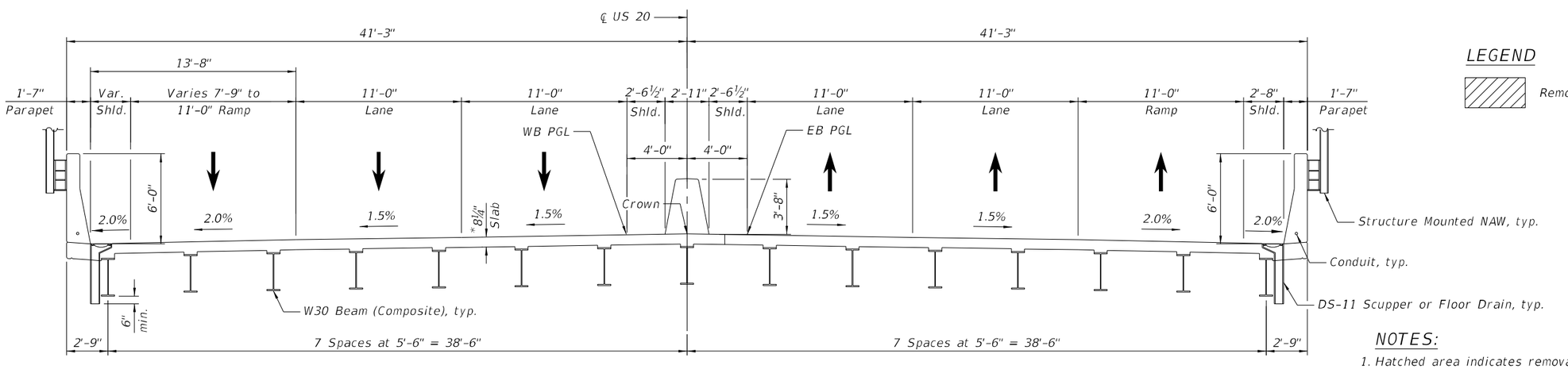

*Prior to Grinding.

FINAL CROSS SECTION

(Looking East)

LEGEND

Removal (See Note 1)

NOTES:

1. Hatched area indicates removal of Existing Structures No. 1.
2. For Temporary Concrete Barrier details see Sheet 6 of 42.
3. See Roadway Plans for quantity of Temporary Concrete Barrier.

MODEL: Default
FILE NAME: pw://gfnet-pw.bentley.com:gfnet-pw-01/Documents/Projects/68096/Project Working/A_CADD/62U83-Contract1/Sheets/045-0006/0450006-62U83-005-STG

3/20/2024 4:35:00 PM

BURNS McDONNELL

USER NAME = jstarzyk	DESIGNED - ECK	REVISED -	
	CHECKED - GEK	REVISED -	
PLOT SCALE = 8,000 ' / in.	DRAWN - BAH	REVISED -	
PLOT DATE = 3/20/2024	CHECKED - ECK	REVISED -	

STATE OF ILLINOIS
DEPARTMENT OF TRANSPORTATION

CONSTRUCTION STAGING
STRUCTURE NO. 045-0006

SHEET 5 OF 42 SHEETS

F.A.P. RTE.	SECTION	COUNTY	TOTAL SHEETS	SHEET NO.
345	FAP 345-23-BR	KANE	379	136
		CONTRACT NO. 62U83		
		ILLINOIS	FED. AID PROJECT	

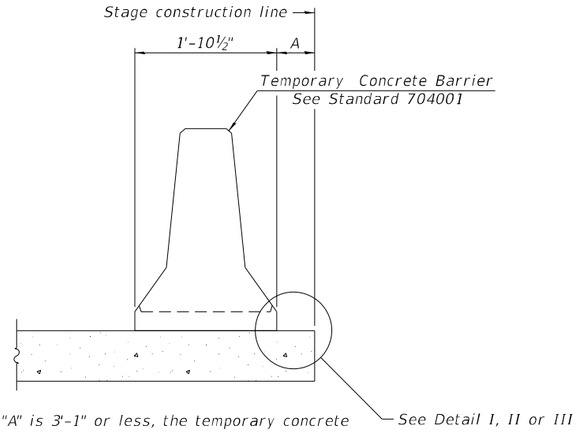

When "A" is 3'-1" or less, the temporary concrete barrier shall be restrained to the new slab according to Detail I, II or III. No restraint is required when "A" is greater than 3'-1".

NEW SLAB OR NEW DECK BEAM

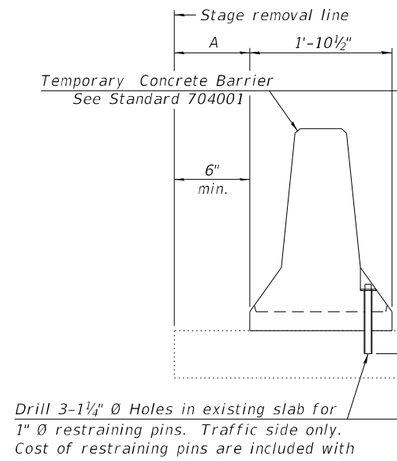

Drill 3-1¼" Ø Holes in existing slab for 1" Ø restraining pins. Traffic side only. Cost of restraining pins are included with Temporary Concrete Barrier. No restraint is required when "A" is greater than 3'-1".

EXISTING SLAB

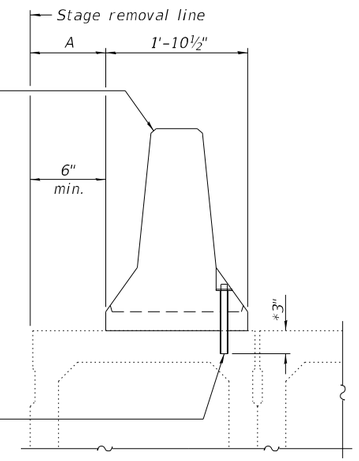

* When hot-mix asphalt wearing surface is present, embedment shall be 3" plus the wearing surface depth.

EXISTING DECK BEAM

SECTIONS THRU SLAB OR DECK BEAM

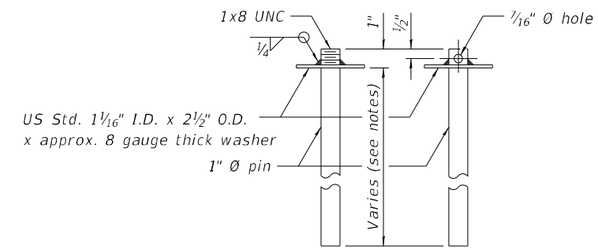

RESTRAINING PIN

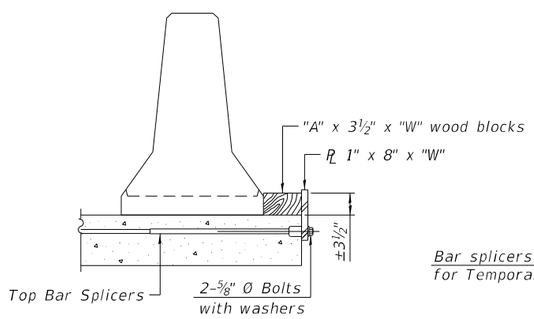

DETAIL I

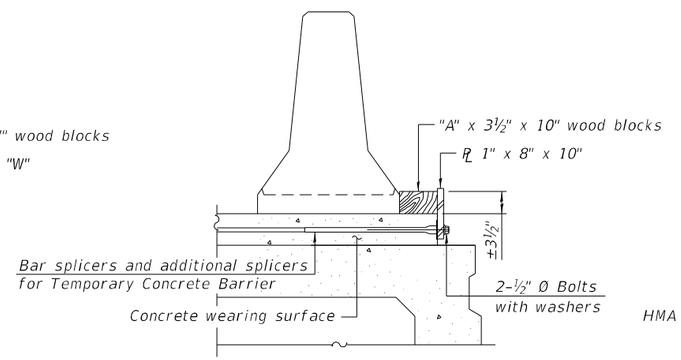

DETAIL II

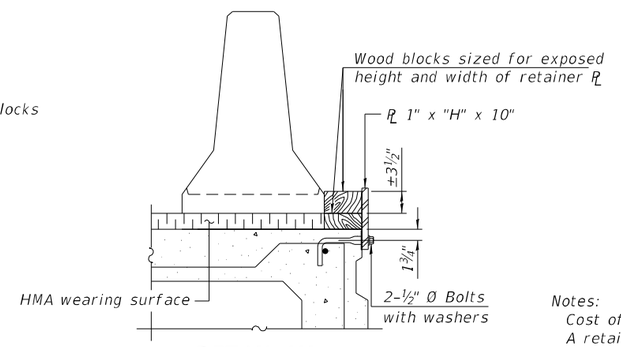

DETAIL III

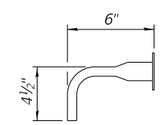

BAR SPLICER FOR #4 BAR - DETAIL III

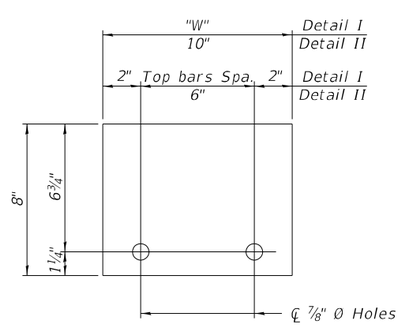

STEEL RETAINER PL 1" x 8" x "W"

(Detail I and II)

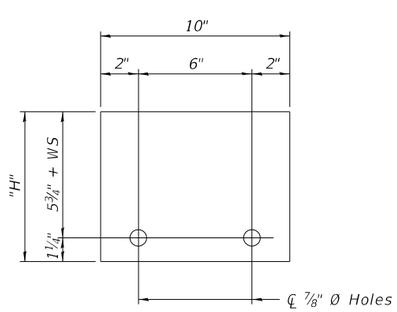

STEEL RETAINER PL 1" x "H" x 10"

(Detail III)

RAILING CRITERIA

NCHRP 350 Test Level	3
Railing Weight (plf)	440

NOTES:

Notes:

Cost of retainer assembly is included with Temporary Concrete Barrier.

A retainer assembly shall be located at the approximate ℄ of each temporary concrete barrier.

The retainer plate shall not be removed until the concrete on the adjacent stage is ready to be poured. For Detail III applications the retainer plate shall not be removed until just prior to placing the adjacent beam.

When the 'A' dimension is less than 1½", the wood block shall be omitted and the barrier shall be placed in direct contact with the steel retainer plate. For deck beam applications the minimum required 'A' distance is 6" to accommodate the shear key clamping device.

Detail I - Installation for a new bridge deck or bridge slab.

Detail II - Installation for a new deck beam with an initial concrete wearing surface. Additional bar splicers shall be provided at 6'-0" centers and paired with the bar splicers of the concrete wearing surface reinforcement to accommodate the installation of the retainer assemblies. The cost of the additional bar splicers is included with the concrete wearing surface.

Detail III - Installation for a new deck beam with no initial wearing surface or with an initial hot-mix asphalt (HMA) wearing surface present. The deck beam directly beneath the temporary concrete barrier shall be fabricated with bar splicer inserts in the side of the beam, as detailed, to accommodate the installation of the retainer assemblies. A pair of bar splicers, 6" apart, shall be placed at 6'-0" centers along the length of the beam. The cost of the bar splicers is included with the deck beam.

R-27

10-12-2021

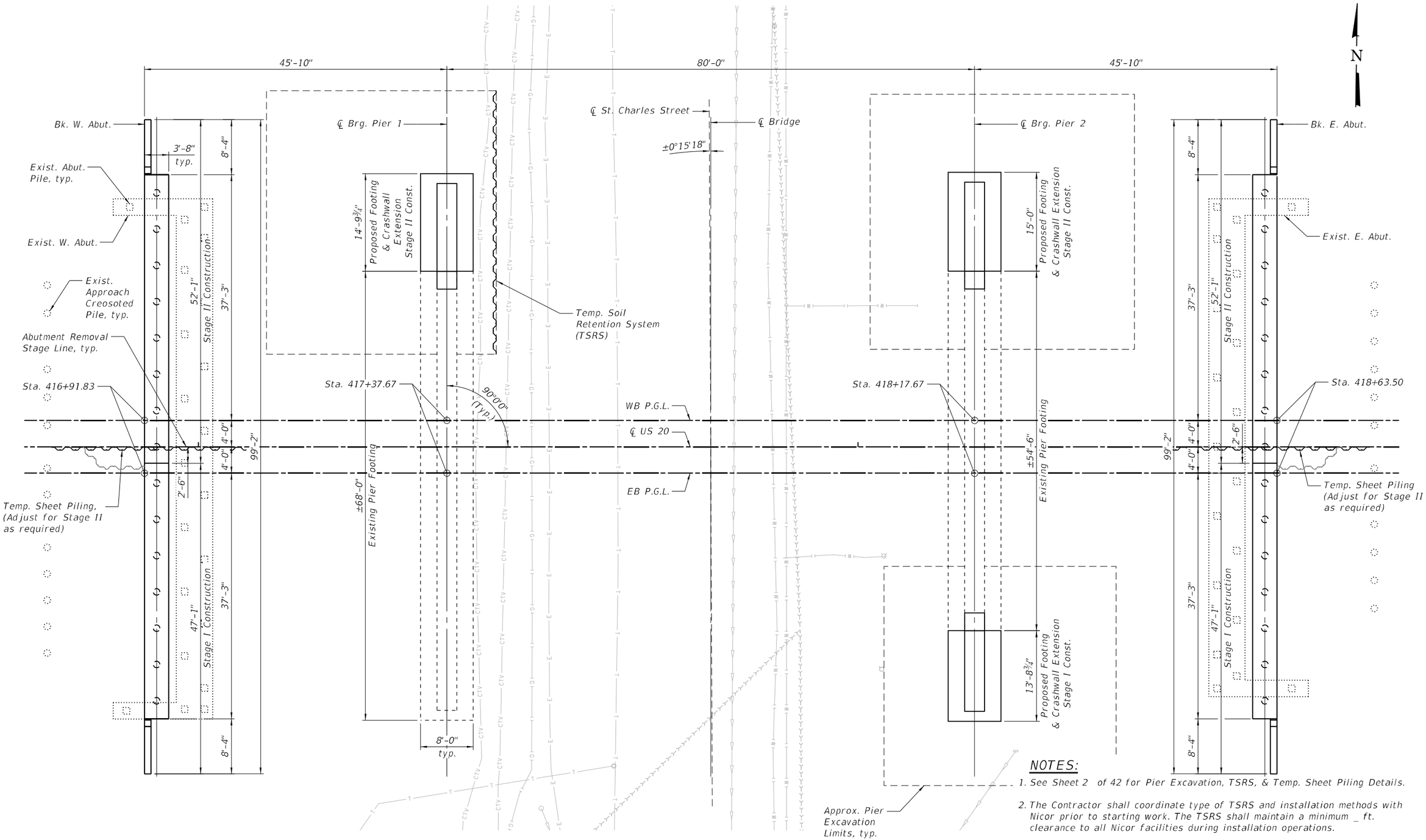

PLAN

NOTES:

1. See Sheet 2 of 42 for Pier Excavation, TSRS, & Temp. Sheet Piling Details.
2. The Contractor shall coordinate type of TSRS and installation methods with Nicor prior to starting work. The TSRS shall maintain a minimum _ ft. clearance to all Nicor facilities during installation operations.
3. The Contractor shall coordinate type of TSRS and installation methods with ComEd prior to starting work. Placeholder for ComEd Watch and Protect notes.

MODEL: Default
FILE NAME: pw://gfnet-pw.bentley.com:gfnet-pw01/Documents/Projects/68096/Project Working/A_CADD/62U83-Contract1/Sheets/045-0006/0450006-62U83-007-SUB

BURNS McDONNELL

USER NAME = jstarzyk	DESIGNED - ECK	REVISED -	
	CHECKED - GEK	REVISED -	
PLOT SCALE = 14.0000 ' / in.	DRAWN - BAH	REVISED -	
PLOT DATE = 3/20/2024	CHECKED - ECK	REVISED -	

STATE OF ILLINOIS
DEPARTMENT OF TRANSPORTATION

SUBSTRUCTURE LAYOUT
STRUCTURE NO. 045-0006

SHEET 7 OF 42 SHEETS

F.A.P. RTE.	SECTION	COUNTY	TOTAL SHEETS	SHEET NO.
345	FAP 345-23-BR	KANE	379	138
		CONTRACT NO. 62U83		
		ILLINOIS	FED. AID PROJECT	

3/20/2024 4:35:08 PM

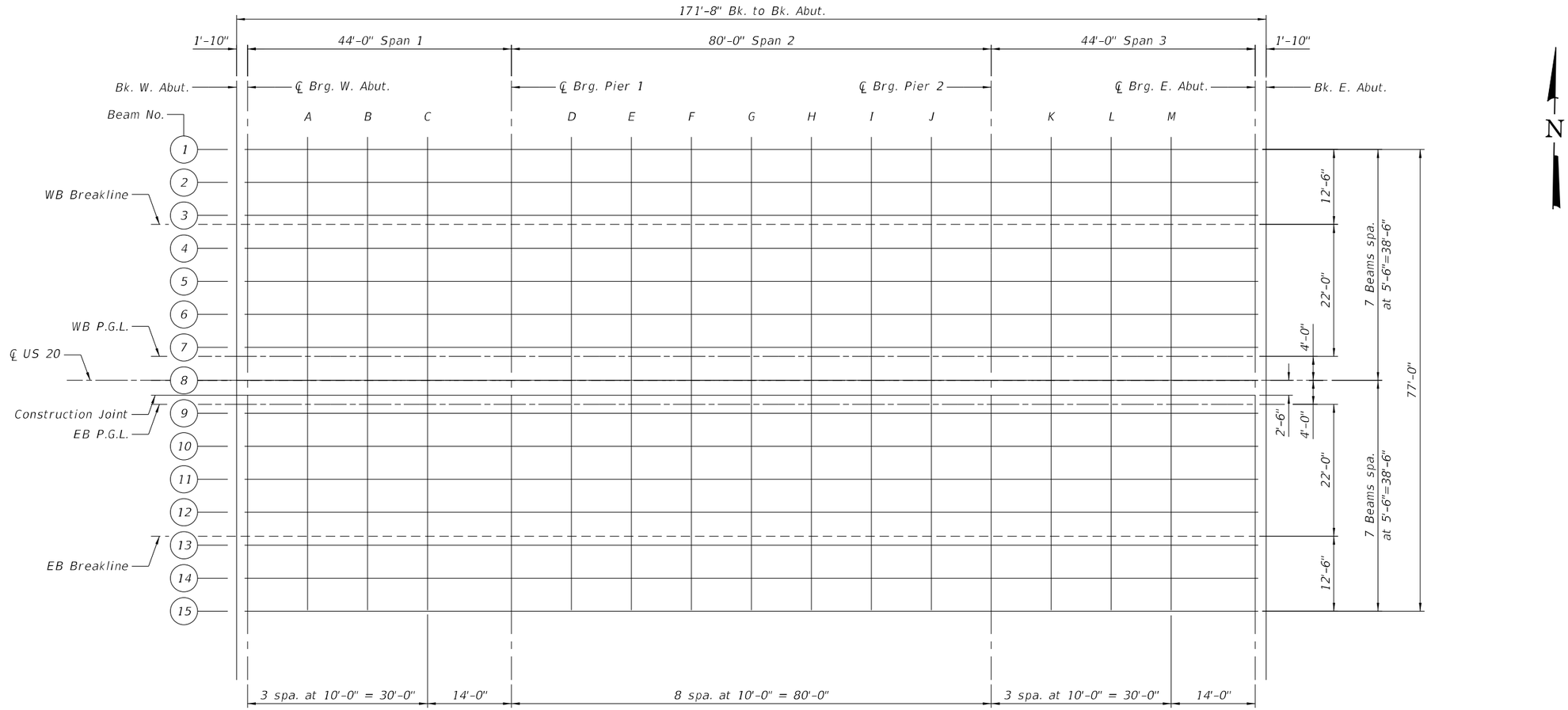

PLAN

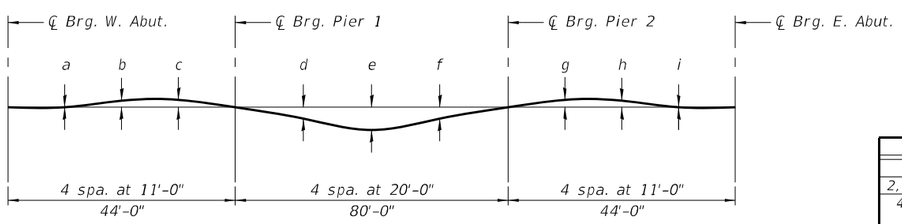

DEAD LOAD DEFLECTION DIAGRAM

(Includes weight of concrete only.)

The above deflections are not to be used in the field if the engineer is working from the grade elevations adjusted for dead load deflections as shown on sheet 9 & 10 of 42.

Beam No.	a	b	c	d	e	f	g	h	i
1 & 15	0"	1/16"	1/8"	15/16"	1 1/2"	15/16"	1/8"	1/16"	0"
2, 3, 13 & 14	0"	1/16"	1/8"	13/16"	1 5/16"	13/16"	1/8"	1/16"	0"
4, 5, 6, 10, 11 & 12	0"	1/16"	1/16"	9/16"	7/8"	9/16"	1/16"	1/16"	0"
7, 8 & 9	0"	1/16"	1/8"	3/4"	1 3/16"	3/4"	1/8"	1/16"	0"

DEAD LOAD DEFLECTION TABLE

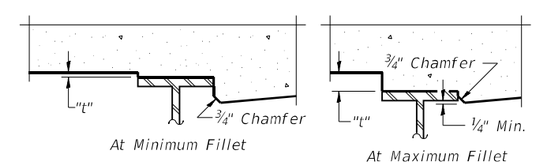

To determine "t": After all structural steel has been erected, elevations of the top flanges of the beams shall be taken at intervals shown on sheet 9 & 10 of 42. These elevations subtracted from the "Theoretical Grade Elevations Adjusted for Dead Load Deflection" shown on sheet 9 of 42. minus slab thickness, equals the fillet heights "t" above top flange of beams.

FILLET HEIGHTS

MODEL: Default
FILE NAME: pw://gfnet-pw.bentley.com:gfnet-pw-01/Documents/Projects/68096/Project Working/A_CADD/62U83-Contract1/Sheets/045-0006/0450006-62U83-008-TOSL
3/20/2024 4:35:12 PM

BURNS McDONNELL

USER NAME = jstarzyk	DESIGNED - ECK	REVISED -	
	CHECKED - GEK	REVISED -	
PLOT SCALE = 20.0000 ' / in.	DRAWN - BAH	REVISED -	
PLOT DATE = 3/20/2024	CHECKED - ECK	REVISED -	

STATE OF ILLINOIS
DEPARTMENT OF TRANSPORTATION

TOP OF DECK SLAB ELEVATIONS LAYOUT
STRUCTURE NO. 045-0006

SHEET 8 OF 42 SHEETS

F.A.P. RTE.	SECTION	COUNTY	TOTAL SHEETS	SHEET NO.
345	FAP 345-23-BR	KANE	379	139
		CONTRACT NO. 62U83		
	ILLINOIS	FED. AID PROJECT		

BEAMS 1 & 15

Location	Station	Offset	Theoretical Grade Elevations	Theoretical Grade Elevations Adjusted For Dead Load Deflection and Grinding
Bk. W. Abut.	416+91.83	38.50	753.73	753.75
℄ Brg. W. Abut.	416+93.67	38.50	753.73	753.75
A	417+03.67	38.50	753.74	753.76
B	417+13.67	38.50	753.75	753.77
C	417+23.67	38.50	753.75	753.76
℄ Brg. Pier 1	417+37.67	38.50	753.74	753.77
D	417+47.67	38.50	753.74	753.79
E	417+57.67	38.50	753.72	753.82
F	417+67.67	38.50	753.70	753.83
G	417+77.67	38.50	753.68	753.82
H	417+87.67	38.50	753.65	753.78
I	417+97.67	38.50	753.61	753.71
J	418+07.67	38.50	753.57	753.63
℄ Brg. Pier 2	418+17.67	38.50	753.53	753.55
K	418+27.67	38.50	753.48	753.49
L	418+37.67	38.50	753.43	753.44
M	418+47.67	38.50	753.37	753.39
℄ Brg. E. Abut.	418+61.67	38.50	753.28	753.30
Bk. E. Abut.	418+63.50	38.50	753.27	753.29

BEAMS 2 & 14

Location	Station	Offset	Theoretical Grade Elevations	Theoretical Grade Elevations Adjusted For Dead Load Deflection and Grinding
Bk. W. Abut.	416+91.83	33.00	753.84	753.86
℄ Brg. W. Abut.	416+93.67	33.00	753.84	753.86
A	417+03.67	33.00	753.85	753.87
B	417+13.67	33.00	753.86	753.88
C	417+23.67	33.00	753.86	753.87
℄ Brg. Pier 1	417+37.67	33.00	753.85	753.88
D	417+47.67	33.00	753.85	753.90
E	417+57.67	33.00	753.83	753.92
F	417+67.67	33.00	753.81	753.93
G	417+77.67	33.00	753.79	753.92
H	417+87.67	33.00	753.76	753.88
I	417+97.67	33.00	753.72	753.81
J	418+07.67	33.00	753.68	753.74
℄ Brg. Pier 2	418+17.67	33.00	753.64	753.66
K	418+27.67	33.00	753.59	753.60
L	418+37.67	33.00	753.54	753.55
M	418+47.67	33.00	753.48	753.50
℄ Brg. E. Abut.	418+61.67	33.00	753.39	753.41
Bk. E. Abut.	418+63.50	33.00	753.38	753.40

BEAMS 3 & 13

Location	Station	Offset	Theoretical Grade Elevations	Theoretical Grade Elevations Adjusted For Dead Load Deflection and Grinding
Bk. W. Abut.	416+91.83	27.50	753.95	753.97
℄ Brg. W. Abut.	416+93.67	27.50	753.95	753.97
A	417+03.67	27.50	753.96	753.98
B	417+13.67	27.50	753.97	753.99
C	417+23.67	27.50	753.97	753.98
℄ Brg. Pier 1	417+37.67	27.50	753.96	753.99
D	417+47.67	27.50	753.96	754.01
E	417+57.67	27.50	753.94	754.03
F	417+67.67	27.50	753.92	754.04
G	417+77.67	27.50	753.90	754.03
H	417+87.67	27.50	753.87	753.99
I	417+97.67	27.50	753.83	753.92
J	418+07.67	27.50	753.79	753.85
℄ Brg. Pier 2	418+17.67	27.50	753.75	753.77
K	418+27.67	27.50	753.70	753.71
L	418+37.67	27.50	753.65	753.66
M	418+47.67	27.50	753.59	753.61
℄ Brg. E. Abut.	418+61.67	27.50	753.50	753.52
Bk. E. Abut.	418+63.50	27.50	753.49	753.51

WB & EB BREAKLINE

Location	Station	Offset	Theoretical Grade Elevations	Theoretical Grade Elevations Adjusted For Dead Load Deflection and Grinding
Bk. W. Abut.	416+91.83	26.00	753.98	754.00
℄ Brg. W. Abut.	416+93.67	26.00	753.98	754.00
A	417+03.67	26.00	753.99	754.01
B	417+13.67	26.00	754.00	754.02
C	417+23.67	26.00	754.00	754.01
℄ Brg. Pier 1	417+37.67	26.00	753.99	754.02
D	417+47.67	26.00	753.99	754.03
E	417+57.67	26.00	753.97	754.06
F	417+67.67	26.00	753.95	754.06
G	417+77.67	26.00	753.93	754.05
H	417+87.67	26.00	753.90	754.01
I	417+97.67	26.00	753.86	753.95
J	418+07.67	26.00	753.82	753.87
℄ Brg. Pier 2	418+17.67	26.00	753.78	753.80
K	418+27.67	26.00	753.73	753.74
L	418+37.67	26.00	753.68	753.69
M	418+47.67	26.00	753.62	753.64
℄ Brg. E. Abut.	418+61.67	26.00	753.53	753.55
Bk. E. Abut.	418+63.50	26.00	753.52	753.54

BEAMS 4 & 12

Location	Station	Offset	Theoretical Grade Elevations	Theoretical Grade Elevations Adjusted For Dead Load Deflection and Grinding
Bk. W. Abut.	416+91.83	22.00	754.04	754.06
℄ Brg. W. Abut.	416+93.67	22.00	754.04	754.06
A	417+03.67	22.00	754.05	754.07
B	417+13.67	22.00	754.06	754.08
C	417+23.67	22.00	754.06	754.08
℄ Brg. Pier 1	417+37.67	22.00	754.05	754.08
D	417+47.67	22.00	754.05	754.09
E	417+57.67	22.00	754.03	754.10
F	417+67.67	22.00	754.01	754.10
G	417+77.67	22.00	753.99	754.08
H	417+87.67	22.00	753.96	754.05
I	417+97.67	22.00	753.92	753.99
J	418+07.67	22.00	753.88	753.93
℄ Brg. Pier 2	418+17.67	22.00	753.84	753.86
K	418+27.67	22.00	753.79	753.81
L	418+37.67	22.00	753.74	753.76
M	418+47.67	22.00	753.68	753.70
℄ Brg. E. Abut.	418+61.67	22.00	753.59	753.61
Bk. E. Abut.	418+63.50	22.00	753.58	753.60

BEAMS 5 & 11

Location	Station	Offset	Theoretical Grade Elevations	Theoretical Grade Elevations Adjusted For Dead Load Deflection and Grinding
Bk. W. Abut.	416+91.83	16.50	754.12	754.14
℄ Brg. W. Abut.	416+93.67	16.50	754.12	754.14
A	417+03.67	16.50	754.13	754.15
B	417+13.67	16.50	754.14	754.16
C	417+23.67	16.50	754.14	754.16
℄ Brg. Pier 1	417+37.67	16.50	754.14	754.16
D	417+47.67	16.50	754.13	754.17
E	417+57.67	16.50	754.11	754.18
F	417+67.67	16.50	754.09	754.18
G	417+77.67	16.50	754.07	754.16
H	417+87.67	16.50	754.04	754.13
I	417+97.67	16.50	754.01	754.07
J	418+07.67	16.50	753.97	754.01
℄ Brg. Pier 2	418+17.67	16.50	753.92	753.94
K	418+27.67	16.50	753.87	753.89
L	418+37.67	16.50	753.82	753.84
M	418+47.67	16.50	753.76	753.78
℄ Brg. E. Abut.	418+61.67	16.50	753.67	753.69
Bk. E. Abut.	418+63.50	16.50	753.66	753.68

NOTE:

1. Offsets are measured in feet and are given relative to ℄ US 20.

BEAMS 6 & 10

Location	Station	Offset	Theoretical Grade Elevations	Theoretical Grade Elevations Adjusted For Dead Load Deflection and Grinding
Bk. W. Abut.	416+91.83	11.00	754.20	754.22
℄ Brg. W. Abut.	416+93.67	11.00	754.20	754.22
A	417+03.67	11.00	754.22	754.24
B	417+13.67	11.00	754.22	754.24
C	417+23.67	11.00	754.23	754.24
℄ Brg. Pier 1	417+37.67	11.00	754.22	754.24
D	417+47.67	11.00	754.21	754.25
E	417+57.67	11.00	754.20	754.26
F	417+67.67	11.00	754.18	754.26
G	417+77.67	11.00	754.15	754.25
H	417+87.67	11.00	754.12	754.21
I	417+97.67	11.00	754.09	754.16
J	418+07.67	11.00	754.05	754.09
℄ Brg. Pier 2	418+17.67	11.00	754.01	754.03
K	418+27.67	11.00	753.96	753.97
L	418+37.67	11.00	753.90	753.92
M	418+47.67	11.00	753.84	753.87
℄ Brg. E. Abut.	418+61.67	11.00	753.75	753.78
Bk. E. Abut.	418+63.50	11.00	753.74	753.76

BEAMS 7 & 9

Location	Station	Offset	Theoretical Grade Elevations	Theoretical Grade Elevations Adjusted For Dead Load Deflection and Grinding
Bk. W. Abut.	416+91.83	5.50	754.28	754.30
℄ Brg. W. Abut.	416+93.67	5.50	754.29	754.31
A	417+03.67	5.50	754.30	754.32
B	417+13.67	5.50	754.31	754.32
C	417+23.67	5.50	754.31	754.32
℄ Brg. Pier 1	417+37.67	5.50	754.30	754.32
D	417+47.67	5.50	754.29	754.34
E	417+57.67	5.50	754.28	754.36
F	417+67.67	5.50	754.26	754.37
G	417+77.67	5.50	754.23	754.36
H	417+87.67	5.50	754.21	754.32
I	417+97.67	5.50	754.17	754.26
J	418+07.67	5.50	754.13	754.18
℄ Brg. Pier 2	418+17.67	5.50	754.09	754.11
K	418+27.67	5.50	754.04	754.05
L	418+37.67	5.50	753.99	754.00
M	418+47.67	5.50	753.93	753.95
℄ Brg. E. Abut.	418+61.67	5.50	753.84	753.86
Bk. E. Abut.	418+63.50	5.50	753.82	753.85

WB & EB P.G.L.

Location	Station	Offset	Theoretical Grade Elevations	Theoretical Grade Elevations Adjusted For Dead Load Deflection and Grinding
Bk. W. Abut.	416+91.83	4.00	754.31	754.33
℄ Brg. W. Abut.	416+93.67	4.00	754.31	754.33
A	417+03.67	4.00	754.32	754.34
B	417+13.67	4.00	754.33	754.35
C	417+23.67	4.00	754.33	754.34
℄ Brg. Pier 1	417+37.67	4.00	754.32	754.35
D	417+47.67	4.00	754.32	754.36
E	417+57.67	4.00	754.30	754.39
F	417+67.67	4.00	754.28	754.39
G	417+77.67	4.00	754.26	754.38
H	417+87.67	4.00	754.23	754.34
I	417+97.67	4.00	754.19	754.28
J	418+07.67	4.00	754.15	754.20
℄ Brg. Pier 2	418+17.67	4.00	754.11	754.13
K	418+27.67	4.00	754.06	754.07
L	418+37.67	4.00	754.01	754.02
M	418+47.67	4.00	753.95	753.97
℄ Brg. E. Abut.	418+61.67	4.00	753.86	753.88
Bk. E. Abut.	418+63.50	4.00	753.85	753.87

CONSTRUCTION JOINT

Location	Station	Offset	Theoretical Grade Elevations	Theoretical Grade Elevations Adjusted For Dead Load Deflection and Grinding
Bk. W. Abut.	416+91.83	2.50	754.33	754.35
℄ Brg. W. Abut.	416+93.67	2.50	754.33	754.35
A	417+03.67	2.50	754.34	754.36
B	417+13.67	2.50	754.35	754.37
C	417+23.67	2.50	754.35	754.37
℄ Brg. Pier 1	417+37.67	2.50	754.35	754.37
D	417+47.67	2.50	754.34	754.39
E	417+57.67	2.50	754.32	754.41
F	417+67.67	2.50	754.30	754.41
G	417+77.67	2.50	754.28	754.40
H	417+87.67	2.50	754.25	754.36
I	417+97.67	2.50	754.22	754.30
J	418+07.67	2.50	754.18	754.23
℄ Brg. Pier 2	418+17.67	2.50	754.13	754.15
K	418+27.67	2.50	754.08	754.10
L	418+37.67	2.50	754.03	754.05
M	418+47.67	2.50	753.97	753.99
℄ Brg. E. Abut.	418+61.67	2.50	753.88	753.90
Bk. E. Abut.	418+63.50	2.50	753.87	753.89

GIRDER 8 & ℄ US 20

Location	Station	Offset	Theoretical Grade Elevations	Theoretical Grade Elevations Adjusted For Dead Load Deflection and Grinding
Bk. W. Abut.	416+91.83	0.00	754.37	754.39
℄ Brg. W. Abut.	416+93.67	0.00	754.37	754.39
A	417+03.67	0.00	754.38	754.40
B	417+13.67	0.00	754.39	754.41
C	417+23.67	0.00	754.39	754.40
℄ Brg. Pier 1	417+37.67	0.00	754.38	754.41
D	417+47.67	0.00	754.38	754.42
E	417+57.67	0.00	754.36	754.45
F	417+67.67	0.00	754.34	754.45
G	417+77.67	0.00	754.32	754.44
H	417+87.67	0.00	754.29	754.40
I	417+97.67	0.00	754.25	754.34
J	418+07.67	0.00	754.21	754.26
℄ Brg. Pier 2	418+17.67	0.00	754.17	754.19
K	418+27.67	0.00	754.12	754.13
L	418+37.67	0.00	754.07	754.08
M	418+47.67	0.00	754.01	754.03
℄ Brg. E. Abut.	418+61.67	0.00	753.92	753.94
Bk. E. Abut.	418+63.50	0.00	753.91	753.93

NOTE:

1. Offsets are measured in feet and are given relative to ℄ US 20.

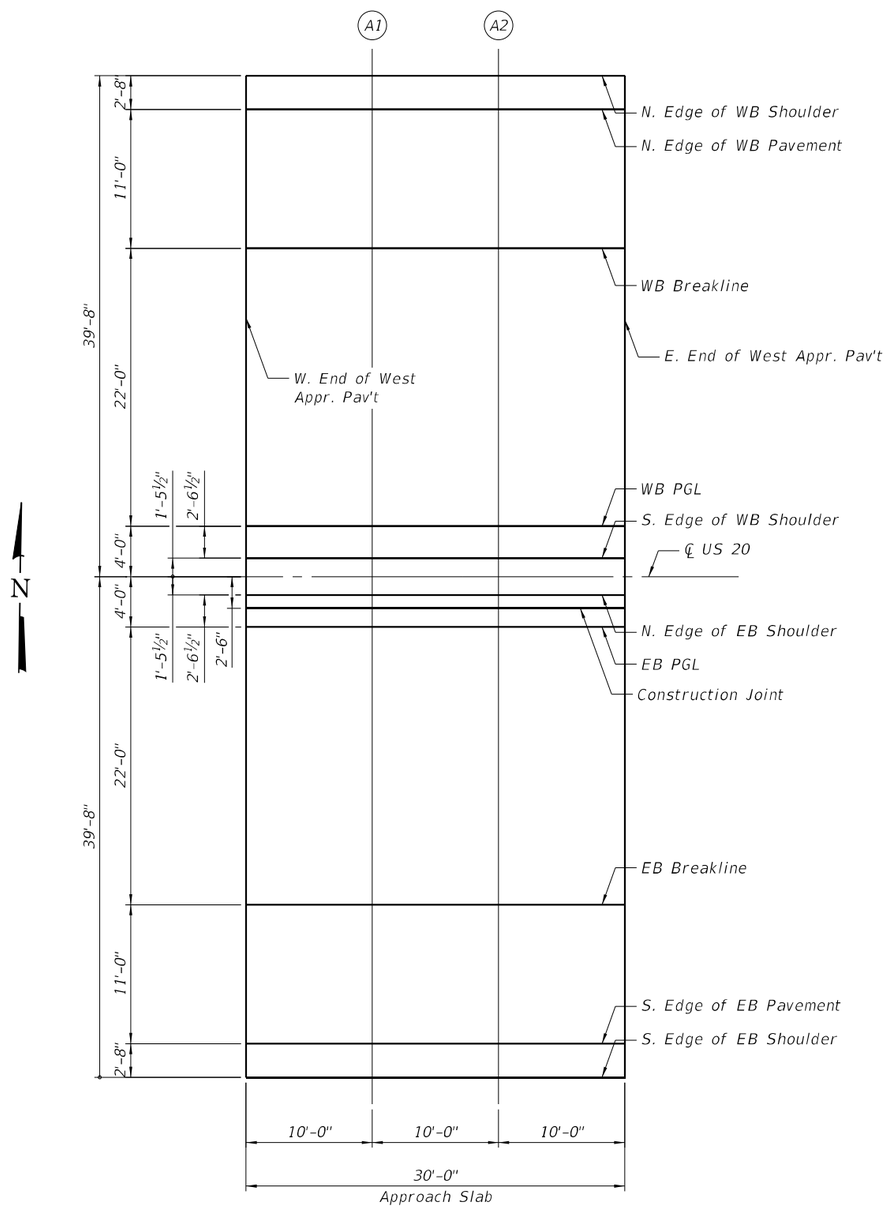

WEST APPROACH PLAN

N. EDGE OF WB SHLD. & S. EDGE OF EB SHLD.

Location	Station	Offsets	Theoretical Grade Elevations	Theoretical Grade Elevations Adjusted For Grinding
W. End W. Appr. Pav't.	416+62.83	39.67	753.64	753.66
A1	416+72.83	39.67	753.67	753.69
A2	416+82.83	39.67	753.69	753.71
E. End W. Appr. Pav't.	416+92.83	39.67	753.70	753.73

CONSTRUCTION JOINT

Location	Station	Offsets	Theoretical Grade Elevations	Theoretical Grade Elevations Adjusted For Grinding
W. End W. Appr. Pav't.	416+62.83	2.50	754.26	754.28
A1	416+72.83	2.50	754.29	754.31
A2	416+82.83	2.50	754.31	754.33
E. End W. Appr. Pav't.	416+92.83	2.50	754.33	754.35

N. EDGE OF WB PAV'T & S. EDGE OF EB PAV'T

Location	Station	Offsets	Theoretical Grade Elevations	Theoretical Grade Elevations Adjusted For Grinding
W. End W. Appr. Pav't.	416+62.83	37.00	753.69	753.71
A1	416+72.83	37.00	753.72	753.74
A2	416+82.83	37.00	753.74	753.76
E. End W. Appr. Pav't.	416+92.83	37.00	753.76	753.78

S. EDGE OF WB SHLD. & N. EDGE OF EB SHLD.

Location	Station	Offsets	Theoretical Grade Elevations	Theoretical Grade Elevations Adjusted For Grinding
W. End W. Appr. Pav't.	416+62.83	1.46	754.28	754.30
A1	416+72.83	1.46	754.31	754.33
A2	416+82.83	1.46	754.33	754.35
E. End W. Appr. Pav't.	416+92.83	1.46	754.35	754.37

WB & EB BREAKLINE

Location	Station	Offsets	Theoretical Grade Elevations	Theoretical Grade Elevations Adjusted For Grinding
W. End W. Appr. Pav't.	416+62.83	26.00	753.91	753.93
A1	416+72.83	26.00	753.94	753.96
A2	416+82.83	26.00	753.96	753.98
E. End W. Appr. Pav't.	416+92.83	26.00	753.98	754.00

℄ US 20

Location	Station	Offsets	Theoretical Grade Elevations	Theoretical Grade Elevations Adjusted For Grinding
W. End W. Appr. Pav't.	416+62.83	0.00	754.30	754.32
A1	416+72.83	0.00	754.33	754.35
A2	416+82.83	0.00	754.35	754.37
E. End W. Appr. Pav't.	416+92.83	0.00	754.37	754.39

WB & EB P.G.L.

Location	Station	Offsets	Theoretical Grade Elevations	Theoretical Grade Elevations Adjusted For Grinding
W. End W. Appr. Pav't.	416+62.83	4.00	754.24	754.26
A1	416+72.83	4.00	754.27	754.29
A2	416+82.83	4.00	754.29	754.31
E. End W. Appr. Pav't.	416+92.83	4.00	754.31	754.33

NOTE:

1. Offsets are measured in feet and are given relative to ℄ US 20.

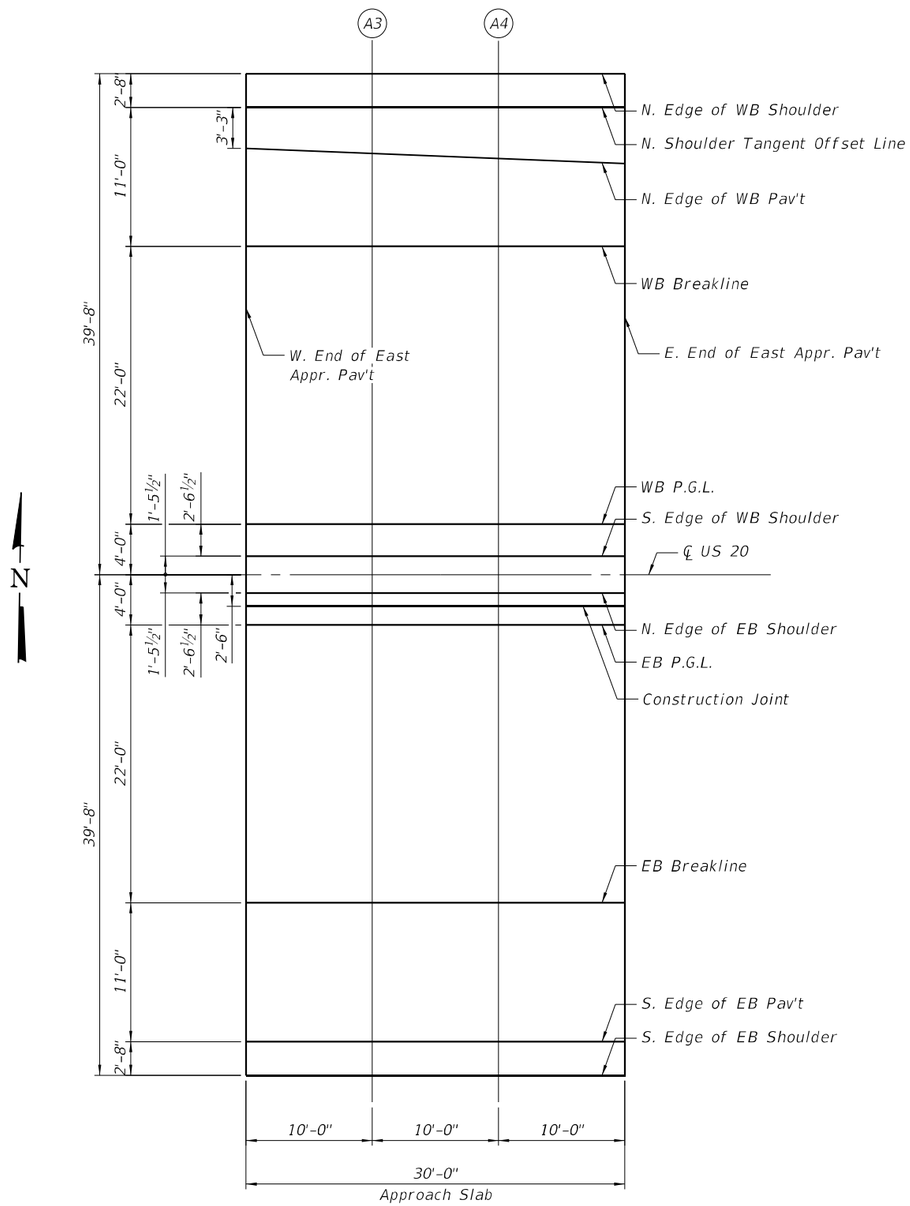

EAST APPROACH PLAN

N. EDGE OF WB SHLD. & S. EDGE OF EB SHLD.

Location	Station	Offsets	Theoretical Grade Elevations	Theoretical Grade Elevations Adjusted For Grinding
W. End E. Appr. Pav't.	418+62.50	39.67	753.25	753.27
A3	418+72.50	39.67	753.18	753.20
A4	418+82.50	39.67	753.10	753.13
E. End E. Appr. Pav't.	418+92.50	39.67	753.02	753.04

N. SHLD. TANGENT OFFSET LINE & S. EDGE OF EB PAV'T

Location	Station	Offsets	Theoretical Grade Elevations	Theoretical Grade Elevations Adjusted For Grinding
W. End E. Appr. Pav't.	418+62.50	37.00	753.30	753.32
A3	418+72.50	37.00	753.23	753.25
A4	418+82.50	37.00	753.16	753.18
E. End E. Appr. Pav't.	418+92.50	37.00	753.08	753.10

N. EDGE OF WB PAV'T

Location	Station	Offsets	Theoretical Grade Elevations	Theoretical Grade Elevations Adjusted For Grinding
W. End E. Appr. Pav't.	418+62.50	33.75	753.37	753.39
A3	418+72.50	33.34	753.30	753.33
A4	418+82.50	32.95	753.24	753.26
E. End E. Appr. Pav't.	418+92.50	32.55	753.17	753.19

WB & EB BREAKLINE

Location	Station	Offsets	Theoretical Grade Elevations	Theoretical Grade Elevations Adjusted For Grinding
W. End E. Appr. Pav't.	418+62.50	26.00	753.52	753.54
A3	418+72.50	26.00	753.45	753.47
A4	418+82.50	26.00	753.38	753.40
E. End E. Appr. Pav't.	418+92.50	26.00	753.30	753.32

WB & EB P.G.L.

Location	Station	Offsets	Theoretical Grade Elevations	Theoretical Grade Elevations Adjusted For Grinding
W. End E. Appr. Pav't.	418+62.50	4.00	753.85	753.87
A3	418+72.50	4.00	753.78	753.80
A4	418+82.50	4.00	753.71	753.73
E. End E. Appr. Pav't.	418+92.50	4.00	753.63	753.65

CONSTRUCTION JOINT

Location	Station	Offsets	Theoretical Grade Elevations	Theoretical Grade Elevations Adjusted For Grinding
W. End E. Appr. Pav't.	418+62.50	2.50	753.88	753.90
A3	418+72.50	2.50	753.81	753.83
A4	418+82.50	2.50	753.73	753.75
E. End E. Appr. Pav't.	418+92.50	2.50	753.65	753.67

S. EDGE OF WB SHLD. & N. EDGE OF EB SHLD.

Location	Station	Offsets	Theoretical Grade Elevations	Theoretical Grade Elevations Adjusted For Grinding
W. End E. Appr. Pav't.	418+62.50	1.46	753.89	753.91
A3	418+72.50	1.46	753.82	753.84
A4	418+82.50	1.46	753.75	753.77
E. End E. Appr. Pav't.	418+92.50	1.46	753.67	753.69

℄ US 20

Location	Station	Offsets	Theoretical Grade Elevations	Theoretical Grade Elevations Adjusted For Grinding
W. End E. Appr. Pav't.	418+62.50	0.00	753.91	753.93
A3	418+72.50	0.00	753.84	753.86
A4	418+82.50	0.00	753.77	753.79
E. End E. Appr. Pav't.	418+92.50	0.00	753.69	753.71

NOTE:

1. Offsets are measured in feet and are given relative to ℄ US 20.

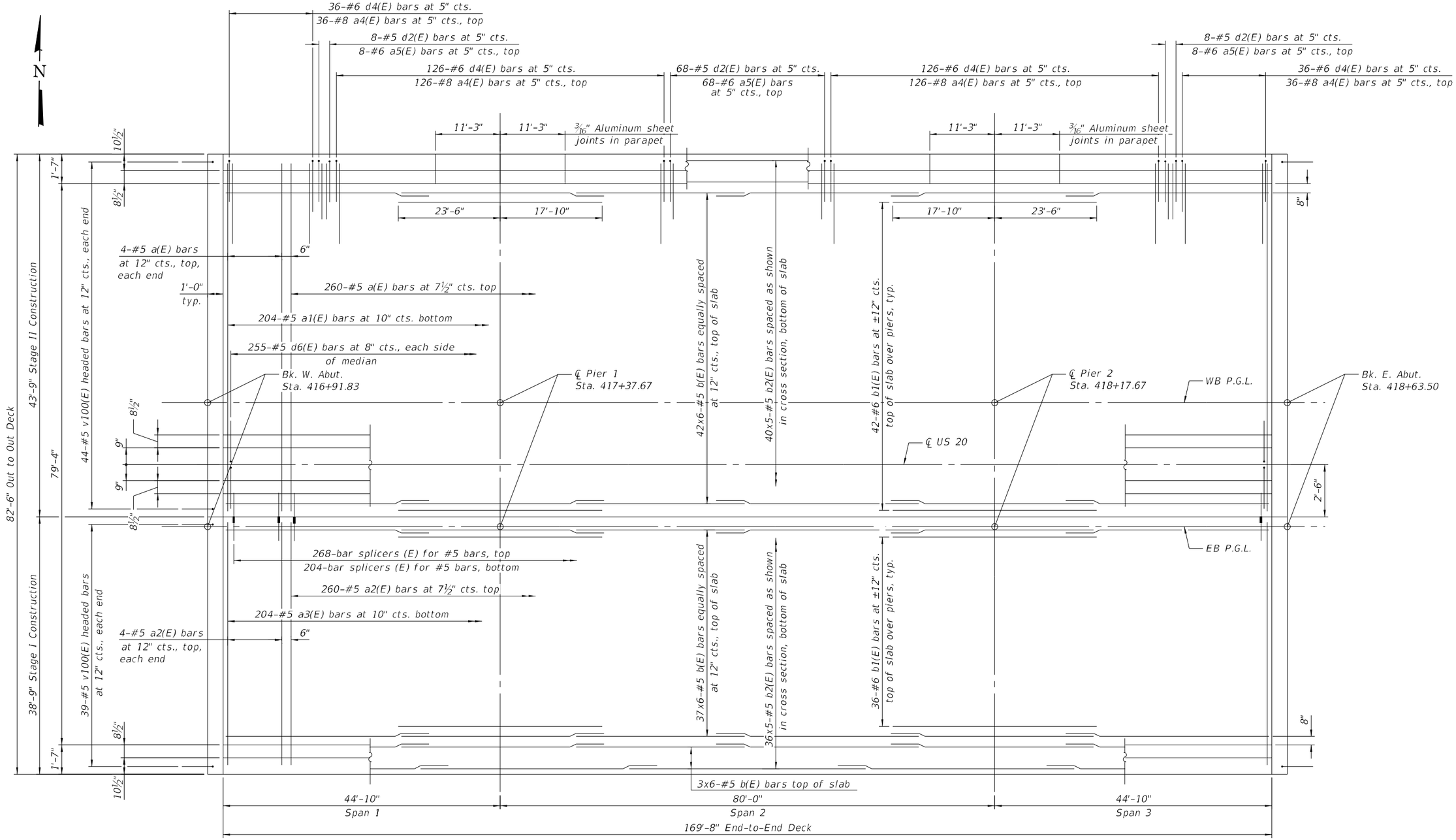

PLAN

MINIMUM BAR LAP

#5 bar = 3'-6"

NOTES:

1. See sheets 1 of 42 for Floor Drain and Scupper spacing.
2. See sheets 15 & 16 of 42 for Superstructure Details and Bill of Materials.
3. See sheet 14 of 42 for Deck Cross Section.
4. Bars indicated this 20 x 3-#5 ect. indicates 20 lines of bars with 3 lengths per line.
5. During the deck pour operation, the Contractor shall pour both end diaphragms first before proceeding with the deck. Modifications to this procedure required analysis by the Contractor prior to the deck pour. Any additional modifications needed, such as temporary hold downs, shall be included in the cost of Concrete Structures.

MODEL: Default
FILE NAME: pw://gfnet-pw.bentley.com:gfnet-pw-01/Documents/Projects/68096/Project Working/A_CADD/62U83-Contract1/Sheets/045-0006/0450006-62U83-013-DK

3/20/2024 4:35:30 PM

BURNS McDONNELL

USER NAME = jstarzyk	DESIGNED - ECK	REVISED -	
	CHECKED - GEK	REVISED -	
PLOT SCALE = 16.0000 ' / in.	DRAWN - BAH	REVISED -	
PLOT DATE = 3/20/2024	CHECKED - ECK	REVISED -	

STATE OF ILLINOIS
DEPARTMENT OF TRANSPORTATION

DECK PLAN
STRUCTURE NO. 045-0006

SHEET 13 OF 42 SHEETS

F.A.P. RTE.	SECTION	COUNTY	TOTAL SHEETS	SHEET NO.
345	FAP 345-23-BR	KANE	379	144

CONTRACT NO. 62U83

ILLINOIS | FED. AID PROJECT

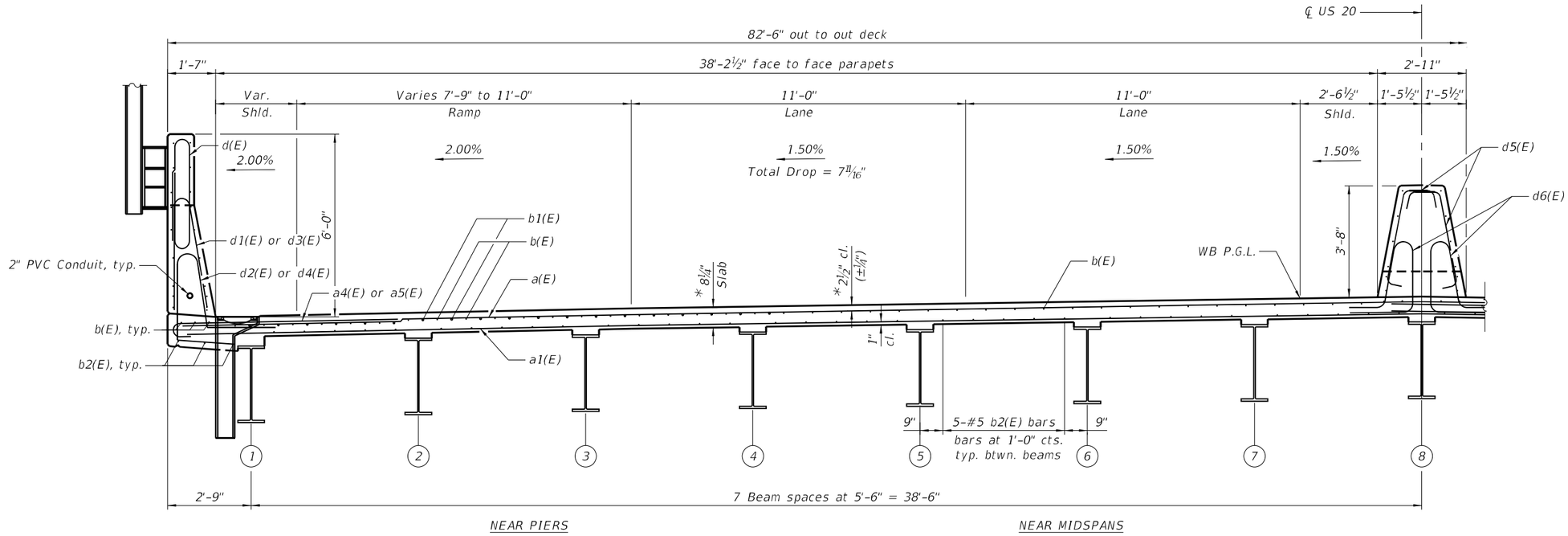

WB CROSS SECTION

(Looking East)

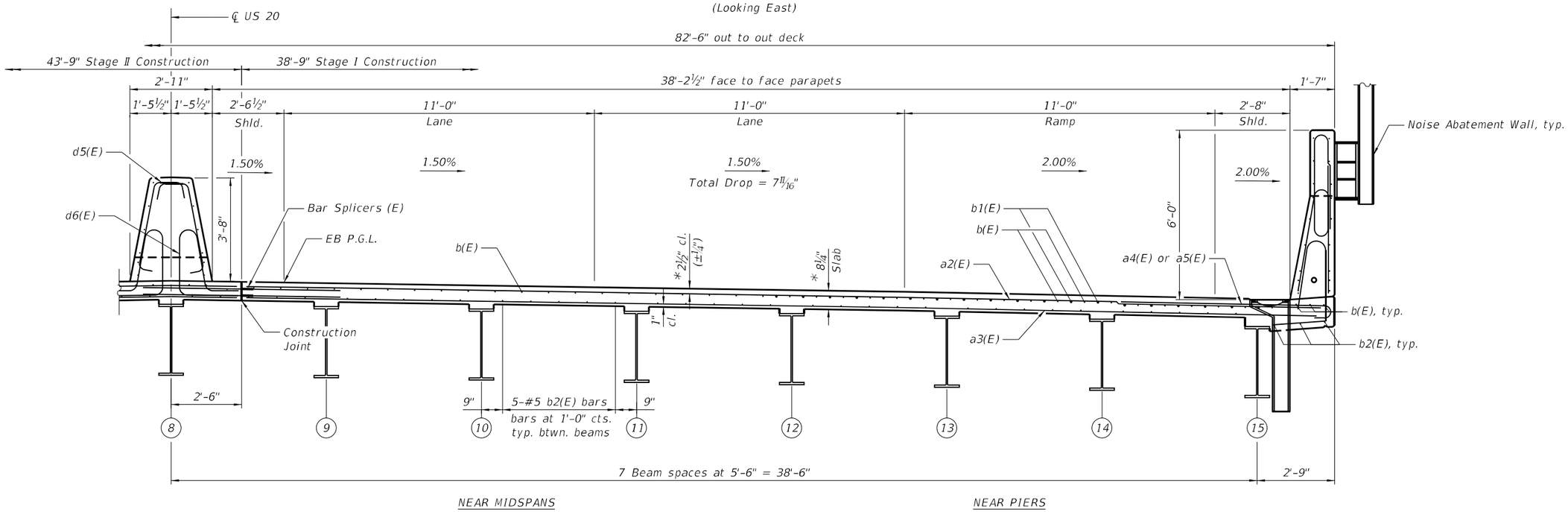

EB CROSS SECTION

(Looking East)

*Prior to Grinding.

MODEL: Default
FILE NAME: pw://gfnet-pw.bentley.com:gfnet-pw-01/Documents/Projects/68096/Project WorkingA_CADD/62U83-Contract1/Sheets/045-0006/0450006-62U83-014-DKXS
3/20/2024 4:35:35 PM

BURNS McDONNELL	USER NAME = jstarzyk	DESIGNED - ECK	REVISED -
		CHECKED - GEK	REVISED -
	PLOT SCALE = 4.0000 ' / in.	DRAWN - BAH	REVISED -
	PLOT DATE = 3/20/2024	CHECKED - ECK	REVISED -

STATE OF ILLINOIS
DEPARTMENT OF TRANSPORTATION

DECK CROSS SECTION
STRUCTURE NO. 045-0006

SHEET 14 OF 42 SHEETS

F.A.P. RTE.	SECTION	COUNTY	TOTAL SHEETS	SHEET NO.
345	FAP 345-23-BR	KANE	379	145

CONTRACT NO. 62U83

ILLINOIS | FED. AID PROJECT

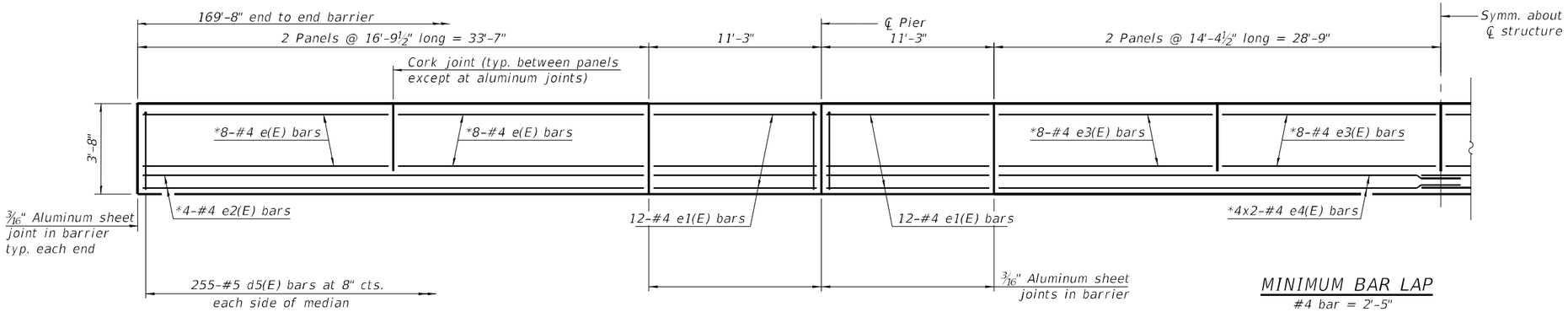

ELEVATION OF MEDIAN BARRIER

* See Section thru Median Barrier

MINIMUM BAR LAP

#4 bar = 2'-5"

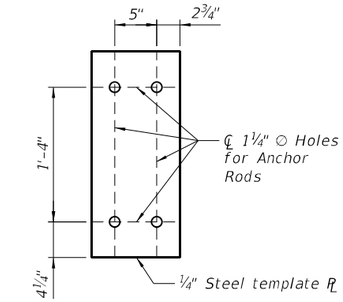

TEMPLATE PLATE FOR NOISE ABATEMENT WALL ANCHOR ROD ASSEMBLY

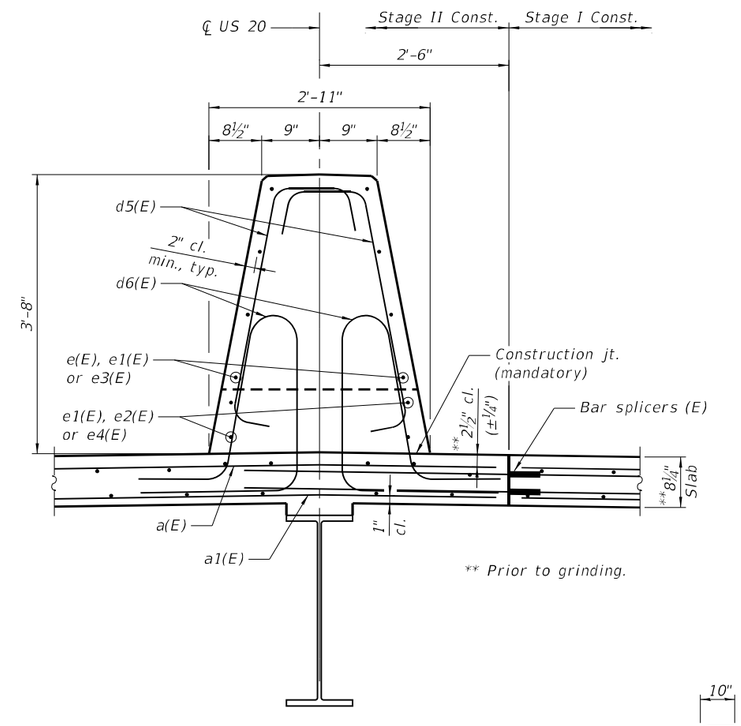

SECTION THRU MEDIAN BARRIER

(Looking East)

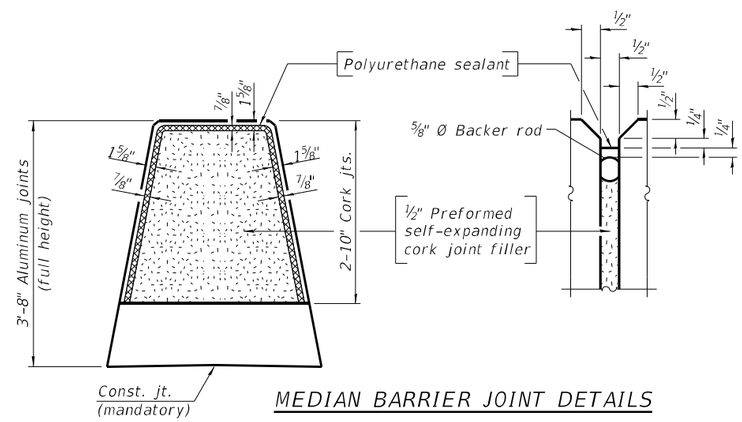

MEDIAN BARRIER JOINT DETAILS

NOTES:

1. The 3/16" min. aluminum sheet shall be ASTM B 209 alloy 3003-H14 and coated with 5 mils of either bitumen paint or epoxy paint to minimize reaction with wet concrete. Cost included with Concrete Superstructure.
2. The polyurethane sealant shall be according to Article 1050.04 of the Std. Spec. and the color shall be gray.
3. Bar terminators will be paid for separately.

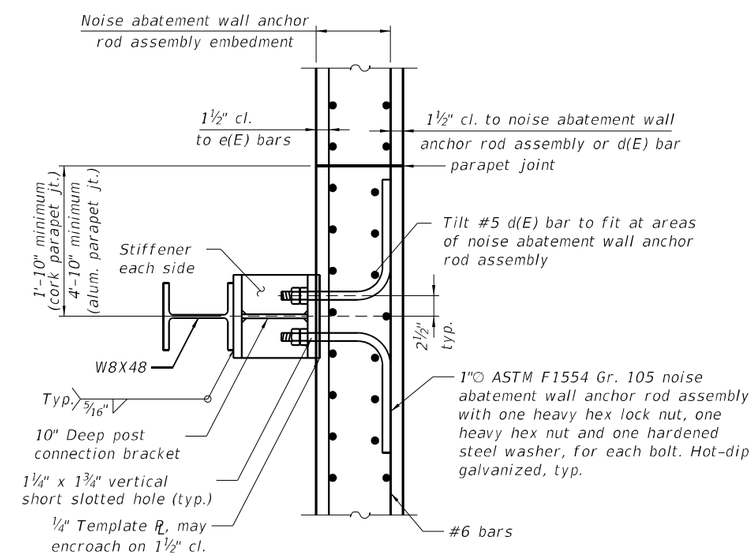

SECTION A-A

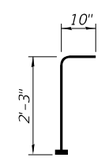

BAR v100(E)

(Headed. 166 -#5
Bar terminators)

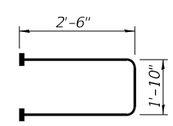

BAR s10(E)

(Headed. 308 -#5
Bar terminators)

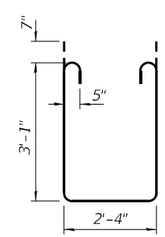

BAR s11(E)

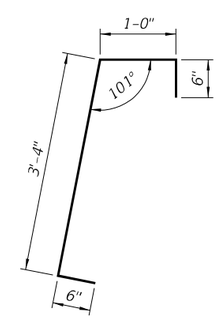

BAR d5(E)

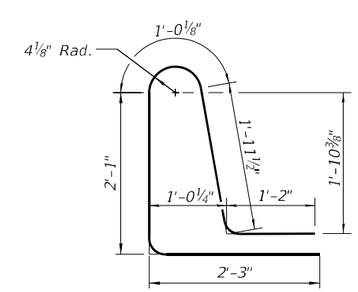

BAR d6(E)

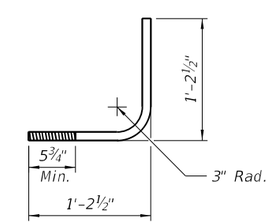

NOISE ABATEMENT WALL ANCHOR ROD ASSEMBLY

MODEL: Default
FILE NAME: pw://gfinet-pw.bentley.com:gfinet-pw01/Documents/Projects/68096/Project Working/A_CADD/62U83-Contract1/Sheets/045-0006/0450006-62U83-015-SUP1
3/20/2024 4:35:39 PM

BURNS McDONNELL	USER NAME = jstarzyk	DESIGNED - ECK	REVISED -	STATE OF ILLINOIS DEPARTMENT OF TRANSPORTATION
		CHECKED - GEK	REVISED -	
	PLOT SCALE = 2.0000 ' / in.	DRAWN - BAH	REVISED -	
	PLOT DATE = 3/20/2024	CHECKED - ECK	REVISED -	

SUPERSTRUCTURE DETAILS I
STRUCTURE NO. 045-0006

SHEET 15 OF 42 SHEETS

F.A.P. RTE.	SECTION	COUNTY	TOTAL SHEETS	SHEET NO.
345	FAP 345-23-BR	KANE	379	146
		CONTRACT NO. 62U83		
		ILLINOIS	FED. AID PROJECT	

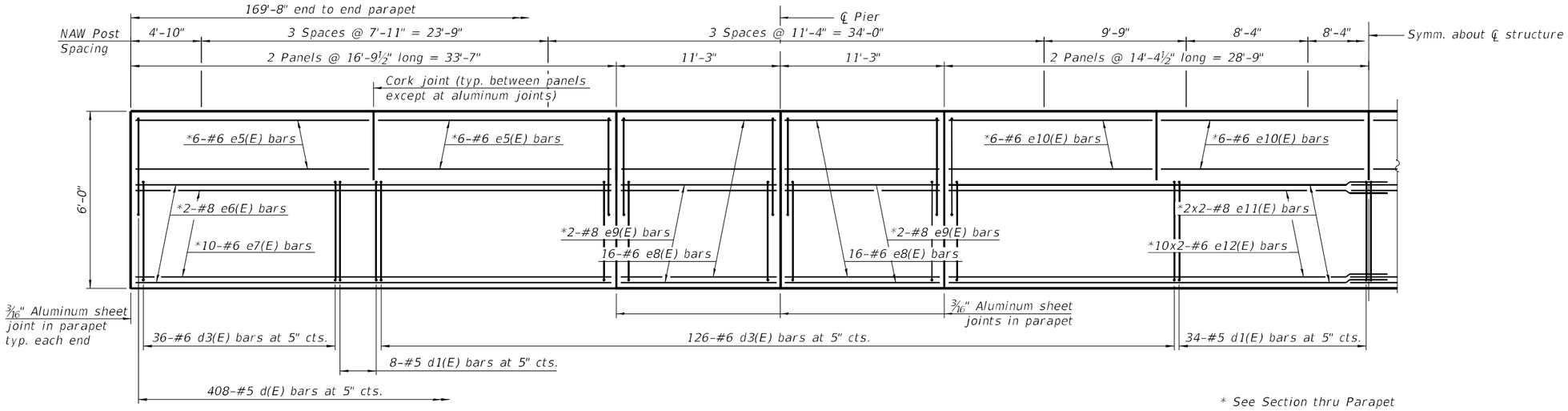

* See Section thru Parapet

INSIDE ELEVATION OF PARAPET

MINIMUM BAR LAP

#6 bar = 3'-7"
#8 bar = 5'-11"

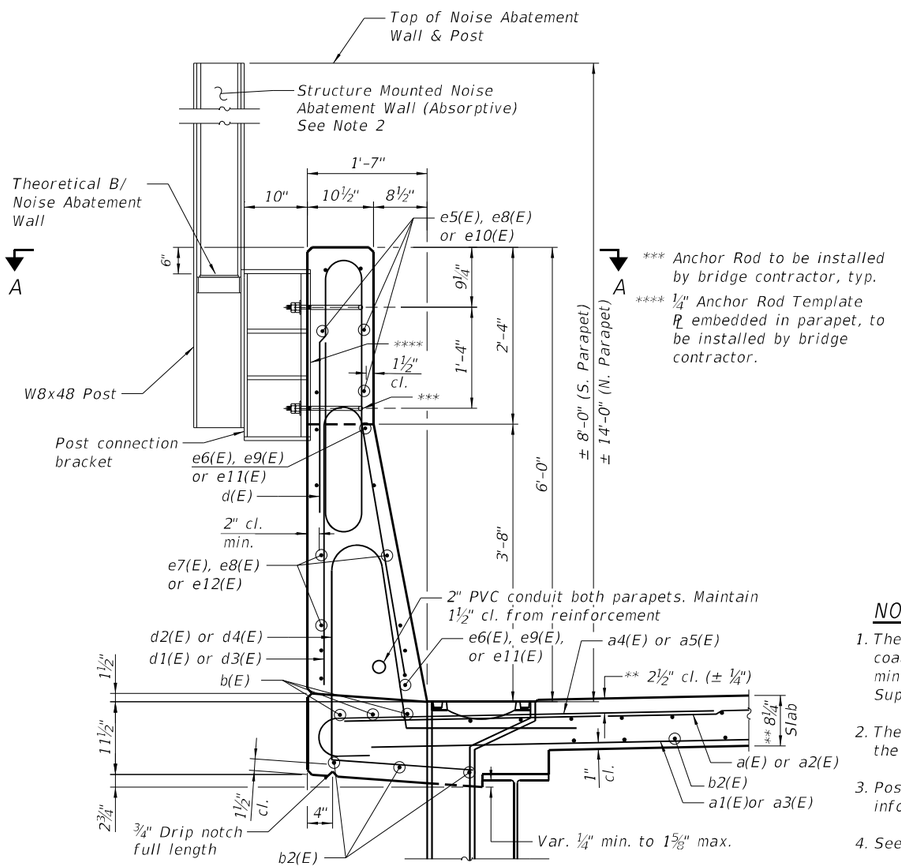

*** Anchor Rod to be installed by bridge contractor, typ.

**** ¼" Anchor Rod Template PL embedded in parapet, to be installed by bridge contractor.

** prior to grinding

SECTION THRU PARAPET

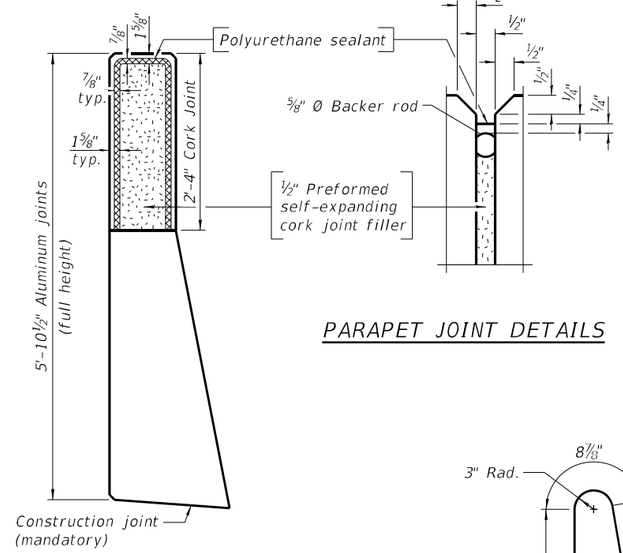

PARAPET JOINT DETAILS

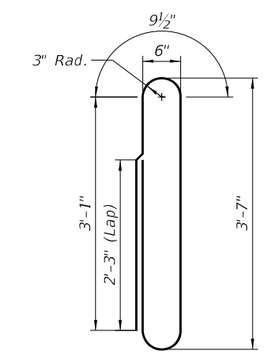

BAR d(E)

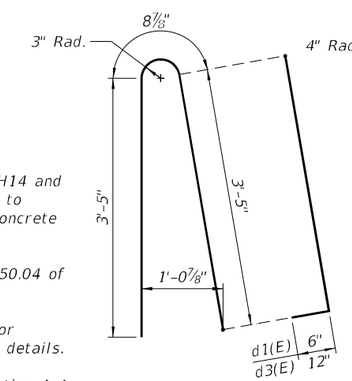

BAR d1(E) or d3(E)

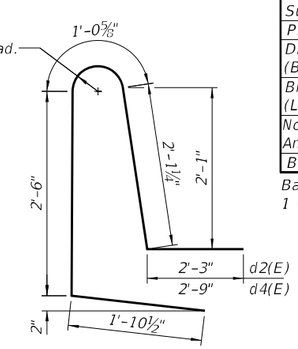

BAR d2(E) or d4(E)

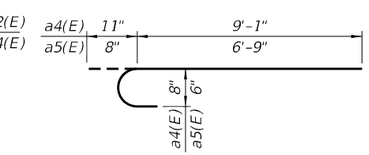

BAR a4(E) or a5(E)

SUPERSTRUCTURE BILL OF MATERIAL

Bar	No.	Size	Length	Shape
a(E)	268	#5	43'-3"	
a1(E)	204	#5	42'-11"	
a2(E)	268	#5	38'-3"	
a3(E)	204	#5	37'-11"	
a4(E)	648	#8	10'-0"	
a5(E)	168	#6	7'-5"	
a6(E)	144	#5	1'-6"	
b(E)	510	#5	31'-2"	
b1(E)	156	#6	41'-4"	
b2(E)	380	#5	36'-8"	
d(E)	816	#5	10'-0"	
d1(E)	168	#5	8'-1"	
d2(E)	168	#5	9'-10"	
d3(E)	648	#6	8'-7"	
d4(E)	648	#6	10'-4"	
d5(E)	510	#5	5'-4"	
d6(E)	510	#5	8'-6"	
e(E)	32	#4	16'-5"	
e1(E)	48	#4	10'-11"	
e2(E)	8	#4	33'-3"	
e3(E)	32	#4	14'-0"	
e4(E)	8	#4	29'-10"	
e5(E)	48	#6	16'-5"	
e6(E)	8	#8	33'-3"	
e7(E)	40	#6	33'-3"	
e8(E)	128	#6	10'-11"	
e9(E)	16	#8	10'-11"	
e10(E)	48	#6	14'-0"	
e11(E)	8	#8	31'-7"	
e12(E)	40	#6	30'-5"	
m10(E)	8	#6	43'-5"	
m11(E)	78	#6	5'-2"	
m12(E)	8	#6	38'-5"	
m13(E)	12	#6	2'-5"	
s10(E)	154	#5	6'-10"	
s11(E)	154	#5	9'-8"	
v100(E)	166	#5	3'-1"	
Reinforcement Bars, Epoxy Coated	Lbs.	153,590		
Concrete Superstructure	Cu. Yds.	580.2		
Protective Coat	Sq. Yd.	1,870		
Diamond Grinding (Bridge Section)	Sq. Yd.	1,290		
Bridge Deck Grooving (Longitudinal)	Sq. Yd.	1,233		
Noise Abatement Wall Anchor Rod Assembly	Each	36		
Bar Terminators	Each	474		

Bars indicated thus 1 x 2-#4 etc. indicates 1 line of bars with 2 lengths per line.

NOTES:

1. The 3/16" aluminum sheet shall be ASTM B 209 alloy 3003-H14 and coated with 5 mils of either bitumen paint or epoxy paint to minimize reaction with wet concrete. Cost included with Concrete Superstructure.
2. The polyurethane sealant shall be according to Article 1050.04 of the Std. Spec. and the color shall be gray.
3. Post and post connection details shown on bridge plans for information only. See Noise Abatement Wall plans for full details.
4. See Sheet 15 of 42 for NAW Anchor Rod Assembly and Section A-A.
5. See Sheet 1 , 22 & 23 of 42 for Floor Drain and Scupper locations and details.

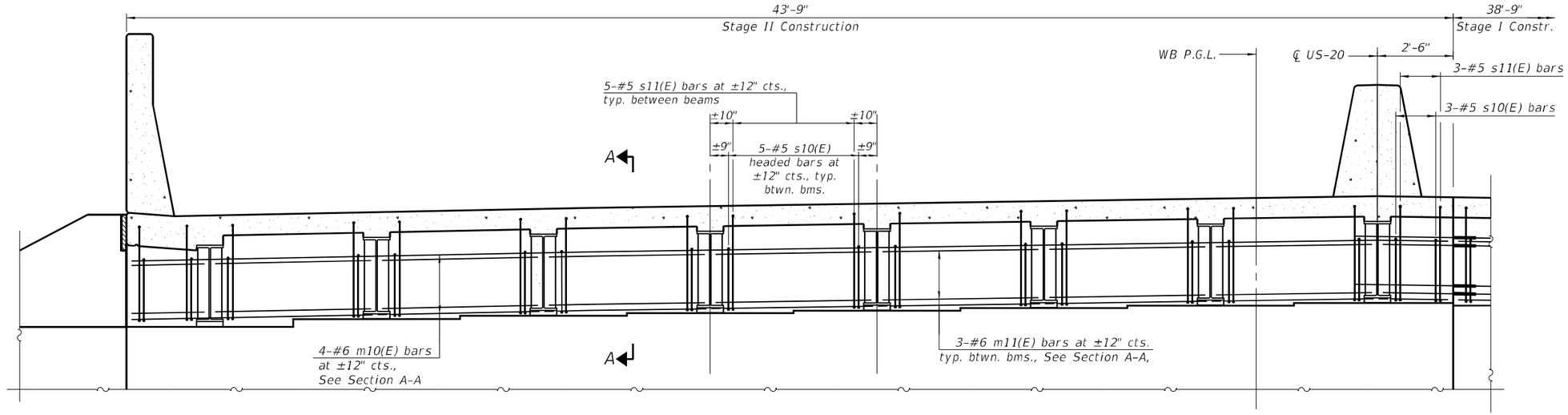

PARTIAL DIAPHRAGM AT ABUTMENT

(E. Abut. shown, W. Abut. mirrored)

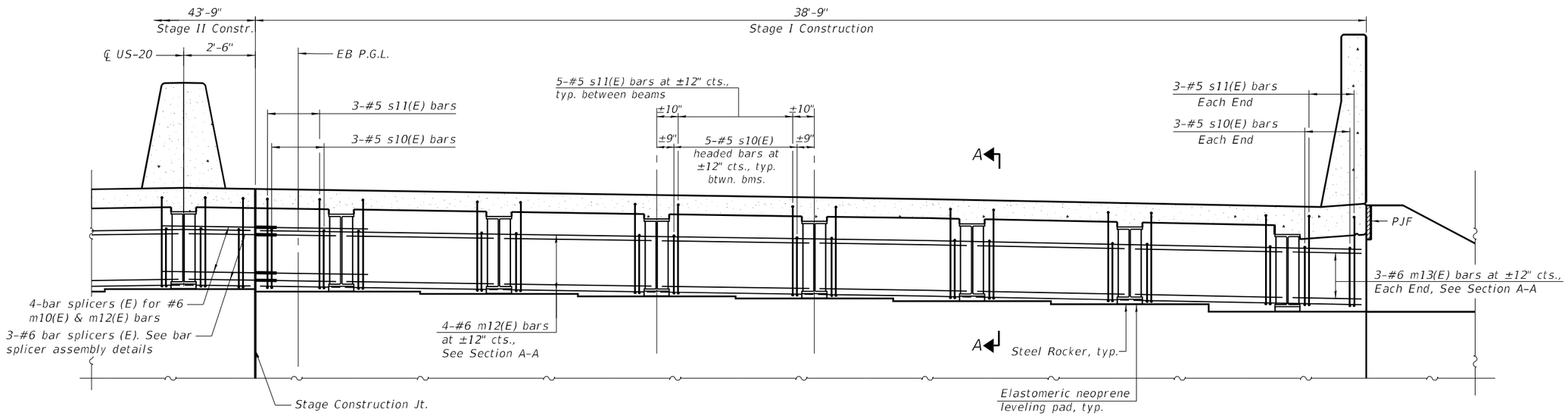

PARTIAL DIAPHRAGM AT ABUTMENT

(E. Abut. shown, W. Abut. mirrored)

NOTES:

1. See Sheet 18 of 42 for Section A-A.
2. See Sheet 36 of 42 for Bar Splicer Assembly Details.

MODEL: Default
FILE NAME: pw://gfnet-pw.bentley.com:gfnet-pw-01/Documents/Projects/68096/Project Working/A_CADD/62U83-Contract1/Sheets/045-0006/0450006-62U83-017-DIA

3/20/2024 4:35:46 PM

BURNS McDONNELL	USER NAME = jstarzyk	DESIGNED - ECK	REVISED -	STATE OF ILLINOIS DEPARTMENT OF TRANSPORTATION	CONCRETE DIAPHRAGMS STRUCTURE NO. 045-0006
		CHECKED - GEK	REVISED -		
	PLOT SCALE = 4.0000 ' / in.	DRAWN - BAH	REVISED -		
	PLOT DATE = 3/20/2024	CHECKED - ECK	REVISED -		SHEET 17 OF 42 SHEETS

F.A.P. RTE.	SECTION	COUNTY	TOTAL SHEETS	SHEET NO.
345	FAP 345-23-BR	KANE	379	148
		CONTRACT NO. 62U83		
		ILLINOIS	FED. AID PROJECT	

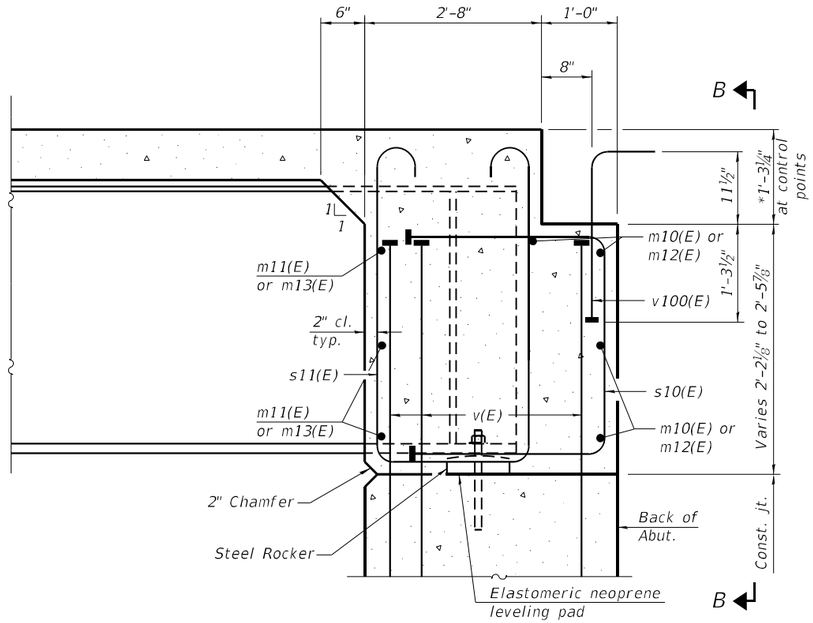

*prior to grinding

SECTION A-A

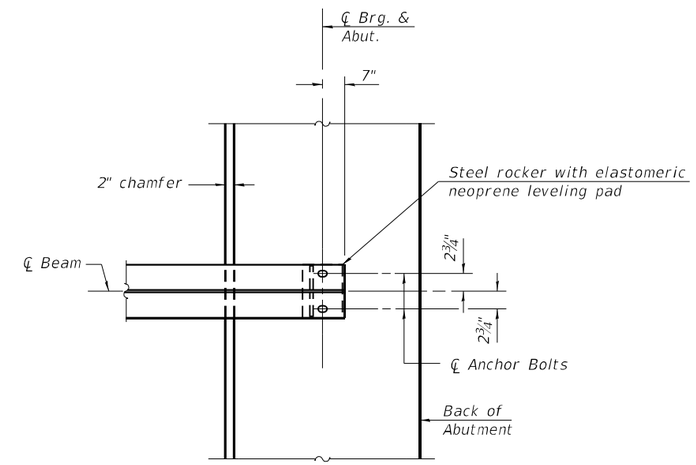

PLAN AT ABUTMENT

(Showing bottom flange of beam)

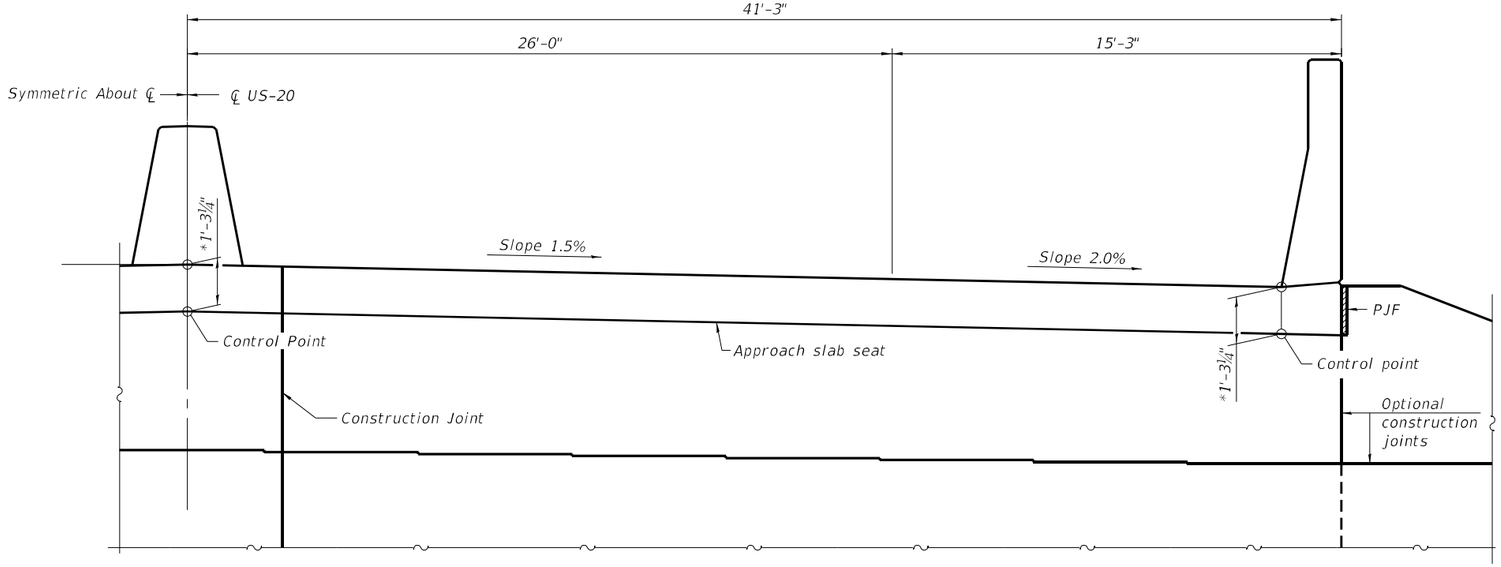

VIEW B-B

NOTES:

1. See sheets 3, 15 & 16 of 42 for superstructure details and Bill of Material.
2. See sheet 21 of 42 for PJF details.
3. See sheet 27 of 42 for bearing details.
4. The approach slab seat shall have a constant slope determined from the control points shown.

MODEL: Default
FILE NAME: pw://gfnet-pw.bentley.com:gfnet-pw-01/Documents/Projects/68096/Project Working/A_CADD/62U83-Contract1/Sheets/045-0006/0450006-62U83-018-DIAD

3/20/2024 4:35:50 PM

BURNS McDONNELL	USER NAME = jstarzyk	DESIGNED - ECK	REVISED -	STATE OF ILLINOIS DEPARTMENT OF TRANSPORTATION	CONCRETE DIAPHRAGM DETAILS STRUCTURE NO. 045-0006
		CHECKED - GEK	REVISED -		
	PLOT SCALE = 2.0000 ' / in.	DRAWN - BAH	REVISED -		
	PLOT DATE = 3/20/2024	CHECKED - ECK	REVISED -		SHEET 18 OF 42 SHEETS

F.A.P. RTE.	SECTION	COUNTY	TOTAL SHEETS	SHEET NO.
345	FAP 345-23-BR	KANE	379	149
		CONTRACT NO. 62U83		
		ILLINOIS	FED. AID PROJECT	

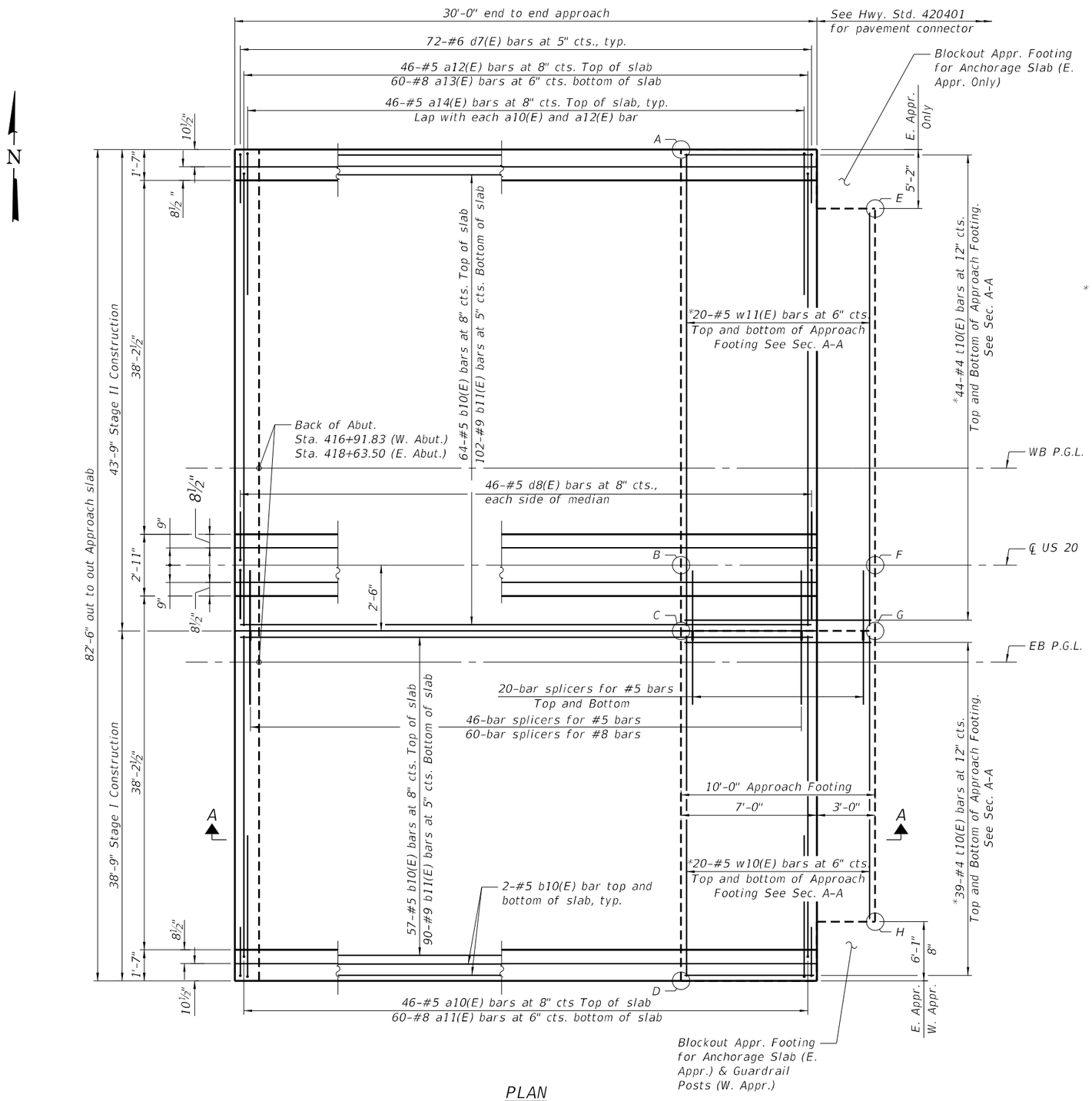

*Cut bars in field to fit blockout.

PLAN

(E. Approach Shown, W. Approach Mirrored)

NOTE:

1. See Sheet 21 of 42 for Section A-A.

TOP AND BOTTOM ELEVATIONS FOR APPROACH FOOTING

West Approach			East Approach		
Point/Location	Top	Bottom	Point/Location	Top	Bottom
A - NE Edge of Appr.	752.38	751.54	A - NW Edge of Appr.	751.80	750.97
B - ℄ US 20	753.07	752.24	B - ℄ US 20	752.49	751.66
C - Construction Jt.	753.03	752.20	C - Construction Jt.	752.46	751.62
D - SE Edge of Appr.	752.38	751.54	D - SW Edge of Appr.	751.80	750.97
E - NW Edge of Appr.	752.35	751.51	E - NE Edge of Appr.	751.82	750.99
F - ℄ US 20	753.04	752.21	F - ℄ US 20	752.41	751.58
G - Construction Jt.	753.01	752.17	G - Construction Jt.	752.37	751.54
H - SW Edge of Appr.	752.36	751.53	H - SE Edge of Appr.	751.84	751.01

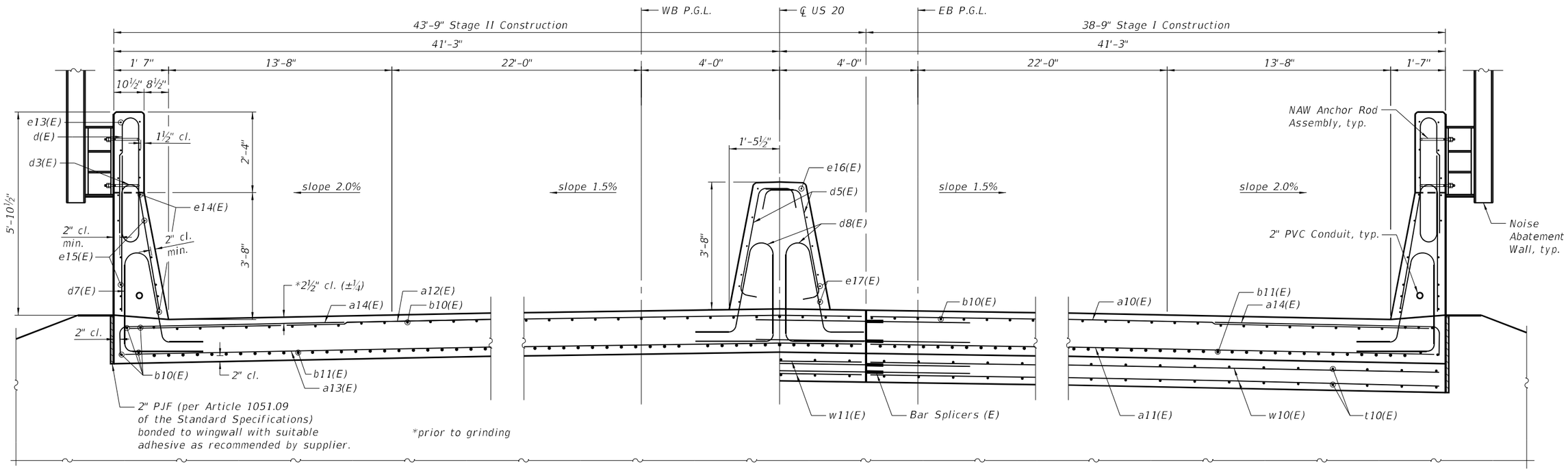

NEAR ABUTMENT

CROSS SECTION
(Looking East)

AT APPROACH FOOTING

MODEL: Default
FILE NAME: pw://gfnet-pw.bentley.com:gfnet-pw-01/Documents/Projects/68096/Project Working/A_CADD/62U83-Contract1/Sheets/045-0006/0450006-62U83-020-ASD1

3/20/2024 4:35:58 PM

BURNS McDONNELL

USER NAME = jstarzyk	DESIGNED - ECK	REVISED -	
	CHECKED - GEK	REVISED -	
PLOT SCALE = 3.0000 ' / in.	DRAWN - BAH	REVISED -	
PLOT DATE = 3/20/2024	CHECKED - ECK	REVISED -	

STATE OF ILLINOIS
DEPARTMENT OF TRANSPORTATION

BRIDGE APPROACH SLAB DETAILS I
STRUCTURE NO. 045-0006

SHEET 20 OF 42 SHEETS

F.A.P. RTE.	SECTION	COUNTY	TOTAL SHEETS	SHEET NO.
345	FAP 345-23-BR	KANE	379	151
		CONTRACT NO. 62U83		
		ILLINOIS	FED. AID PROJECT	

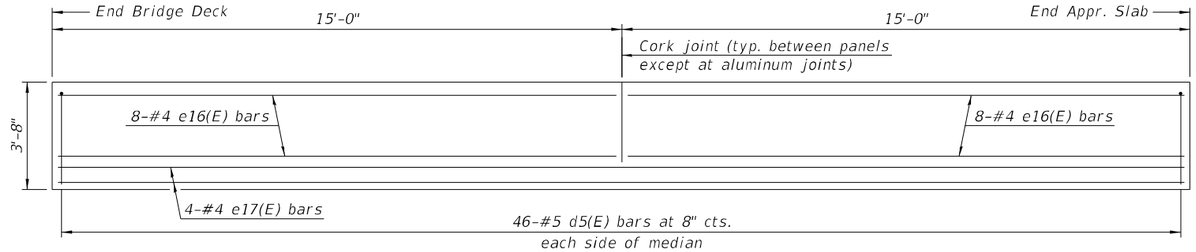

ELEVATION OF MEDIAN BARRIER

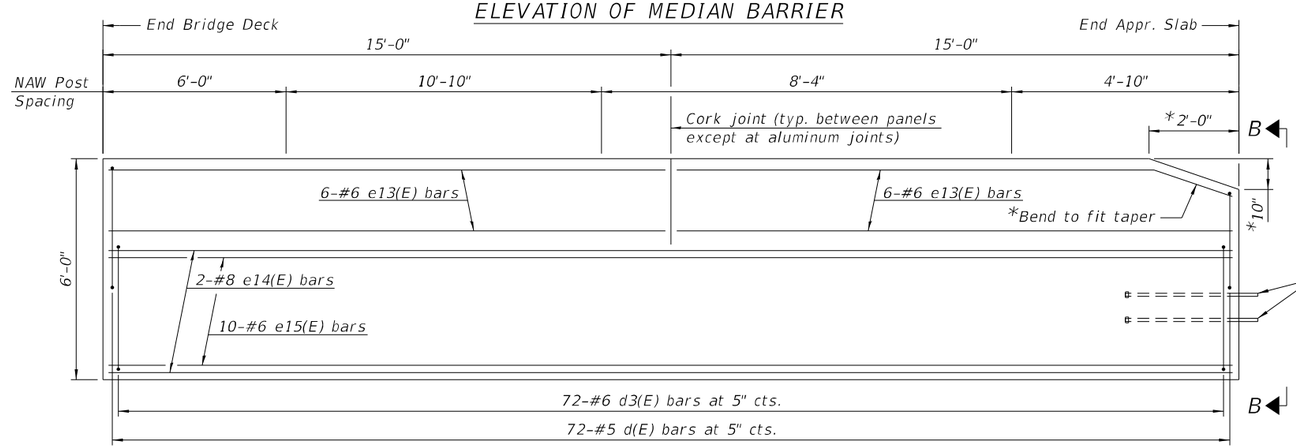

INSIDE ELEVATION AT PARAPET

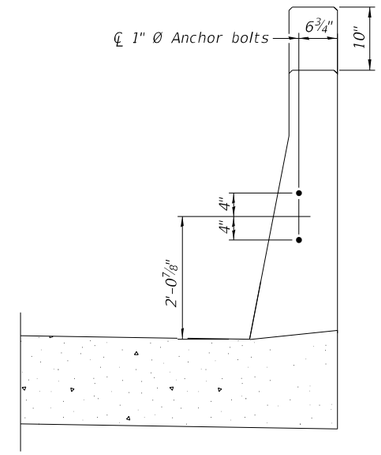

VIEW B-B

NOTES:

1. The joint opening shall be adjusted for temperature per Article 520.04 of the Standard Specifications. However, since this detail is for jointless structures, the length of bridge used to calculate the adjustment shall be equal to half the total bridge length plus the length of the bridge approach slab.
2. Parapet concrete shall be paid for as Concrete Superstructure.
3. Approach slab shall be paid for as Concrete Superstructure (Approach Slab).
4. Approach footing concrete shall be paid for as Concrete Structures.
5. The approach footing maximum applied service bearing pressure (Qmax) = 2.0 ksf.
6. Cost of excavation for approach footing included with Concrete Structures.
7. For Granular Backfill for Structures and drainage treatment details, see sheet 3 of 42 .
8. For Median Parapet Joint details, see sheet 15 of 42 . For Parapet Joint details, see sheet 16 of 42 .
9. For NAW anchor rod assembly, see sheet 15 of 42 .

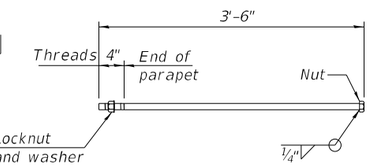

*1" Ø ANCHOR BOLT

(Anchor bolt assemblies shall be galvanized according to Article 1006.09 of the Standard Specifications)

* Taper at W. End of W. Approach Only.

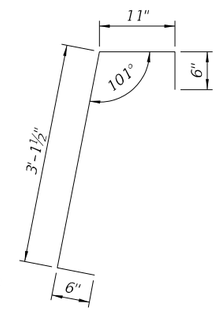

BAR d5(E)

TWO APPROACHES BILL OF MATERIAL

Bar	No.	Size	Length	Shape
a10(E)	92	#5	38'-5"	
a11(E)	120	#8	38'-5"	
a12(E)	92	#5	43'-5"	
a13(E)	120	#8	43'-5"	
a14(E)	184	#5	7'-4"	
b10(E)	258	#5	29'-8"	
b11(E)	384	#9	29'-8"	
d(E)	288	#5	10'-0"	
d3(E)	288	#6	8'-7"	
d5(E)	184	#5	5'-1"	
d7(E)	288	#6	11'-2"	
d8(E)	184	#5	9'-3"	
e13(E)	48	#6	14'-8"	
e14(E)	8	#8	29'-8"	
e15(E)	40	#6	29'-8"	
e16(E)	32	#4	14'-8"	
e17(E)	8	#4	29'-8"	
t10(E)	332	#4	9'-8"	
w10(E)	80	#5	38'-4"	
w11(E)	80	#5	43'-4"	
Reinforcement Bars, Epoxy Coated		Lbs.	109,400	
Concrete Structures		Cu. Yd.	49.9	
Concrete Superstructure		Cu. Yd.	46.7	
Concrete Superstructure (Approach Slab)		Cu. Yd.	233.0	
Protective Coat		Sq. Yd.	662	
Diamond Grinding (Bridge Section)		Sq. Yd.	456	
Bridge Deck Grooving (Longitudinal)		Sq. Yd.	429	
Noise Abatement Wall Anchor Rod Assembly		Each	12	

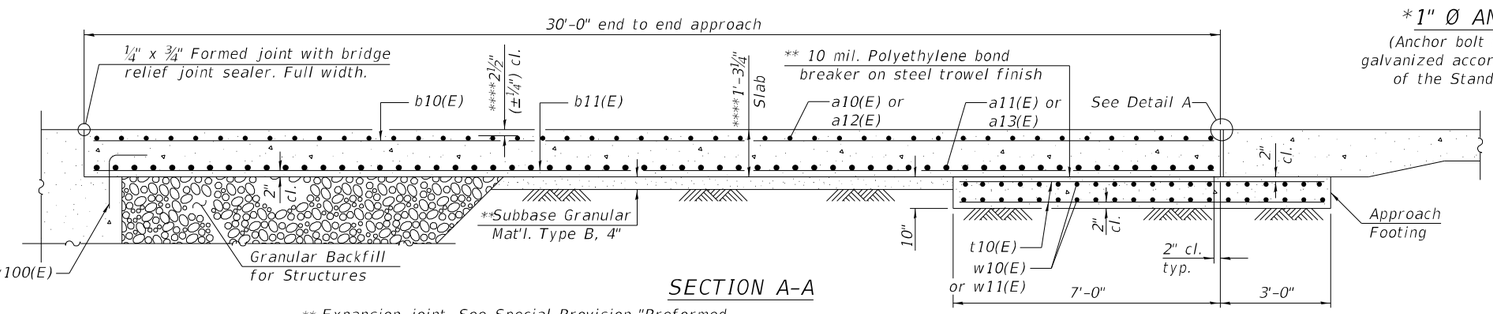

SECTION A-A

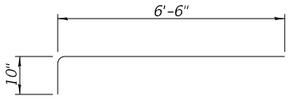

BAR a14(E)

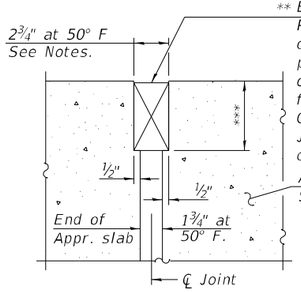

** Expansion joint. See Special Provision "Preformed Pavement Joint Seal". Recess ¼" minimum. Run out to out of outside parapets and continous thru median parapet. For E. Appr. adjacent to anchorage slab at outside parapet, turn up into parapet a minimum of 1 foot above finished pavement. At the HMA Pavement Connector interface, turn the Preformed Pavement Joint Seal down 90 degrees for the full depth of concrete of approach and anchorage slab.

** Cost included with Concrete Superstructure (Approach Slab).
*** Per manufacturer recommendations
**** Prior to grinding

DETAIL A

(Detail A shown, applies to areas adjacent to anchorage slab only. Detail A for pavement connector (HMA) may be found on Highway Standard 420406.)

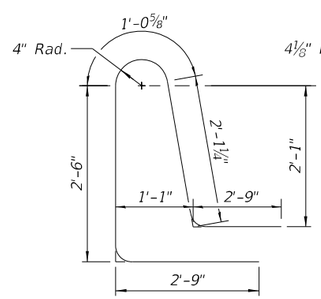

BAR d7(E)

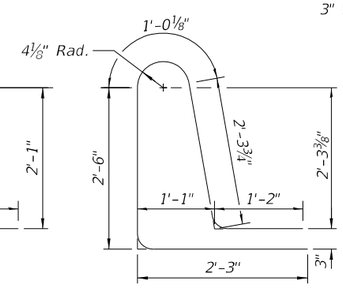

BAR d8(E)

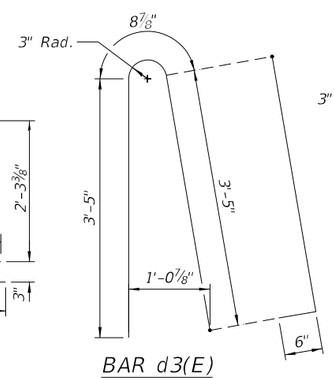

BAR d3(E)

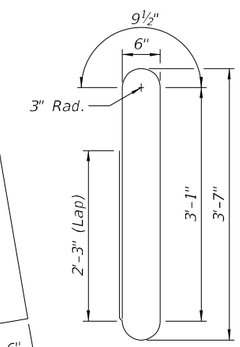

BAR d(E)

BURNS McDONNELL	USER NAME = jstarzyk	DESIGNED - ECK	REVISED -
		CHECKED - GEK	REVISED -
	PLOT SCALE = 2.0000 ' / in.	DRAWN - BAH	REVISED -
	PLOT DATE = 3/20/2024	CHECKED - ECK	REVISED -

STATE OF ILLINOIS
DEPARTMENT OF TRANSPORTATION

BRIDGE APPROACH SLAB DETAILS II
STRUCTURE NO. 045-0006

SHEET 21 OF 42 SHEETS

F.A.P. RTE.	SECTION	COUNTY	TOTAL SHEETS	SHEET NO.
345	FAP 345-23-BR	KANE	379	152
		CONTRACT NO. 62U83		
		ILLINOIS	FED. AID PROJECT	

MODEL: Default
FILE NAME: pw://gfnet-pw.bentley.com:gfnet-pw-01/Documents/Projects/68096/Project Working\A_CADD\62U83-Contract1\Sheets/045-0006/0450006-62U83-021-ASD2
3/20/2024 4:36:02 PM

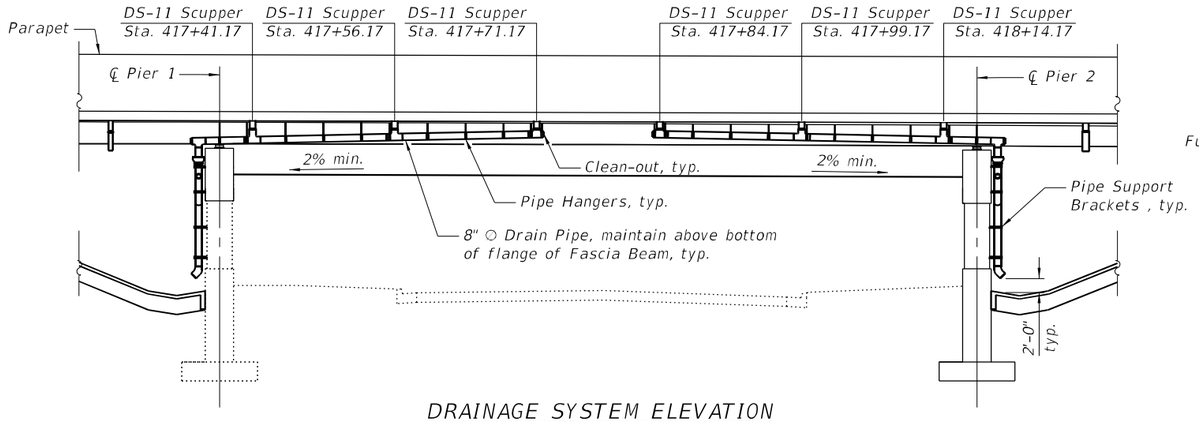

DRAINAGE SYSTEM ELEVATION

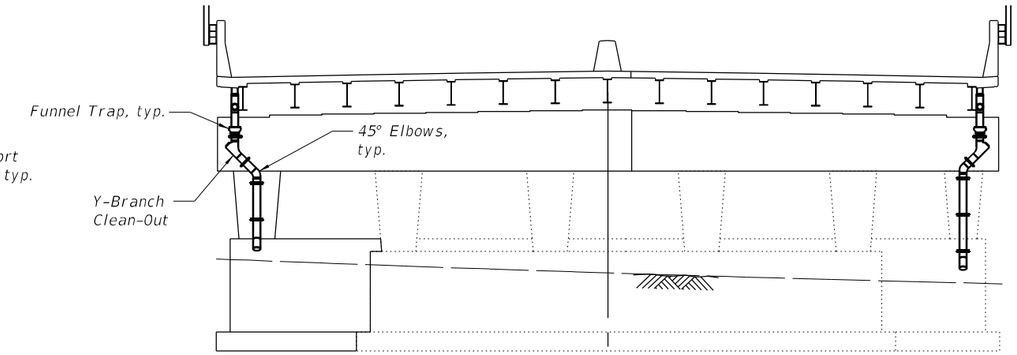

ELEVATION

(Pier 1 - Looking East, Pier 2 Similar - Looking West)

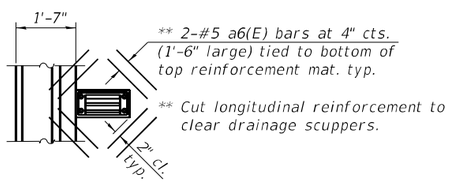

DS-11 SCUPPER PLAN

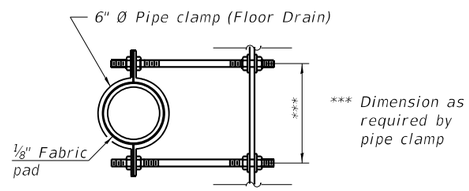

*** Dimension as required by pipe clamp

SECTION A-A

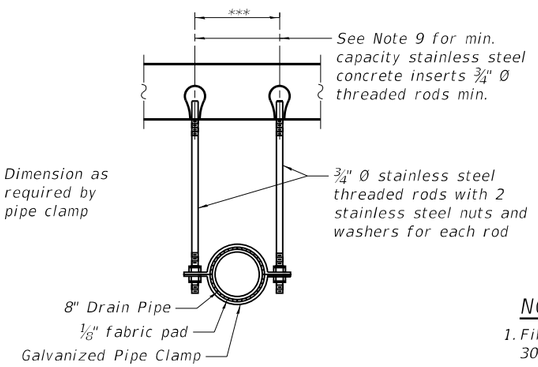

PIPE HANGER

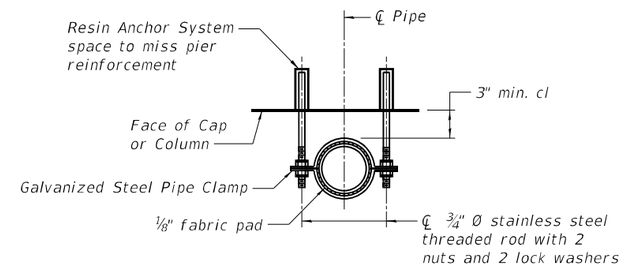

PIPE SUPPORT BRACKET

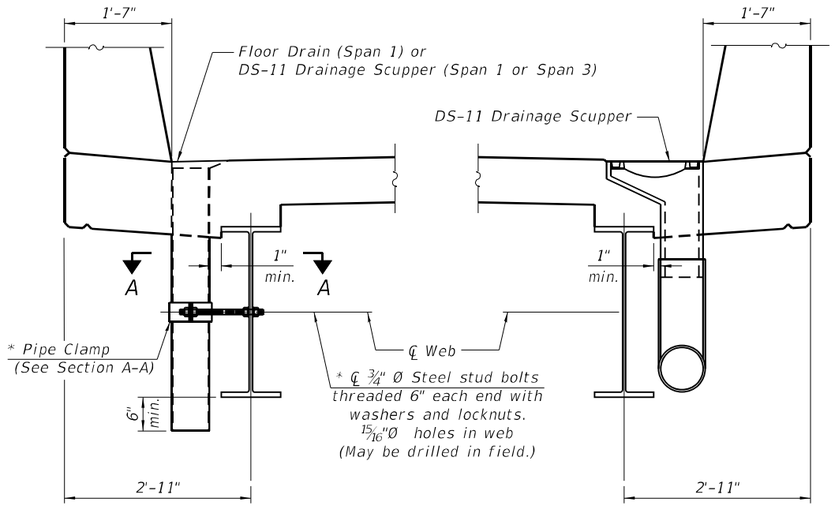

SECTION THRU PARAPET

(Span 1 & Span 3)

* For Floor Drain Only

SECTION THRU PARAPET

(Span 2)

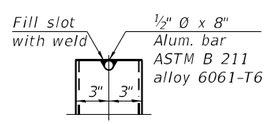

ALUMINUM TUBE

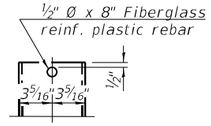

FIBERGLASS PIPE

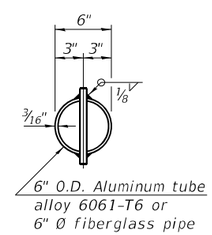

TOP PLAN

(Showing aluminum tube)

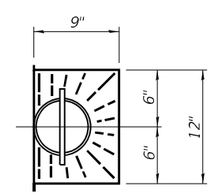

FLOOR DRAIN TOP PLAN

NOTES:

1. Fiberglass pipe shall conform to ASTM D2996, with short-time rupture strength hoop tensile stress of 30,000 p.s.i. minimum.
2. The exterior surfaces of the floor drains shall be painted according to Article 506 of the Standard Specifications with the finish coat as specified. The exterior surfaces of the drains shall be cleaned according to the Society of Protective Coating's Spec. SSPC-SP1 prior to painting.
3. The top portion of aluminum floor drains shall be coated with 5 mils of either bitumen paint or epoxy paint to minimize reaction with wet concrete.
4. The clamping device shall be galvanized according to AASHTO M 232. Cost of clamping device included with Floor Drains.
5. All drain pipes and fittings shall be 8" Ø.
6. All cost for the components and work required for the drainage system, other than the scuppers, will be included in the pay item Drainage System for Structures (L. Sum.).
7. See sheet 23 of 42 for DS-11 Drainage Scupper Details.
8. Horizontal pipe hangers shall be provided at each fitting, clean out, or change in direction and at intermediate points not more than 5'-0" or as required by the manufacturer. Vertical pipe support brackets shall be spaced at 10'-0" max or as required by the manufacturer.
9. Collector pipe hangers shall not have a load capacity of less than 1,000 pounds and shall be designed as to not apply excessive compressive stress to the pipe.
10. Funnel Trap shall accommodate longitudinal movements of 1" each direction.
11. Anchor System shall be drilled and grouted according to Article 509.06 of the Standard Specifications.

BILL OF MATERIAL

Item	Unit	Total
Drainage System for Structures	L. Sum.	1
Floor Drains	Each	4

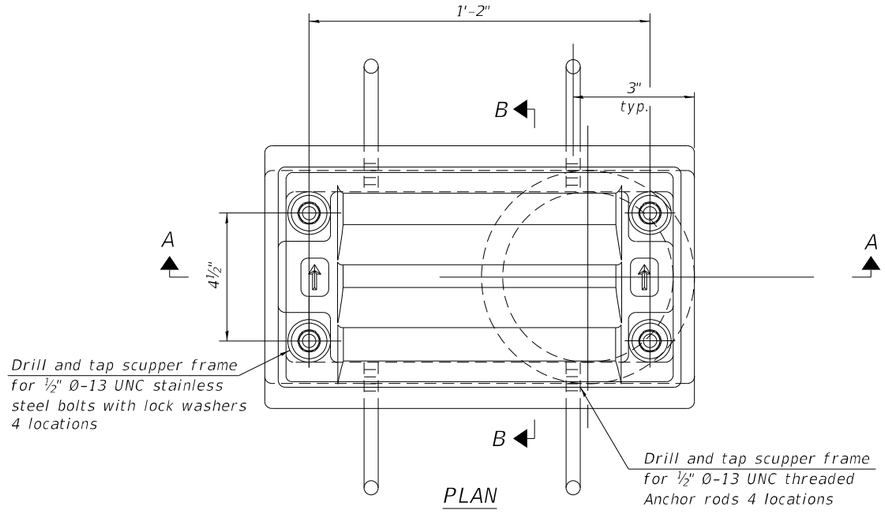

PLAN

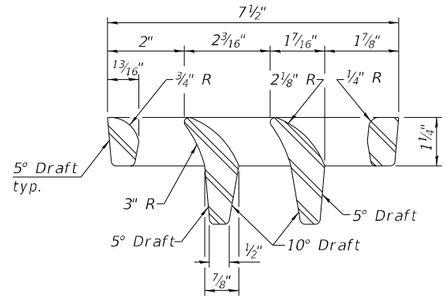

VANE GRATE DETAIL

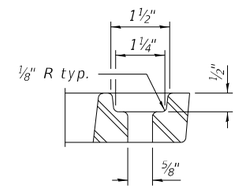

GRATE BOLT HOLE DETAIL

Notes:

All cast iron parts shall be gray iron conforming to the requirements of AASHTO M105, Class 35B and AASHTO M306.

Bolts, anchor rods, nuts and washers shall be according to ASTM A307 and shall be galvanized according to AASHTO M232. As an alternate stainless steel may be used.

Stainless steel hardware shall be according to Article 1006.29(d) of the Standard Specifications.

Structural steel weldments of equal sections and of the same configuration may be substituted for the cast iron scupper frames and downspouts; however, the scupper grates shall remain cast iron. Fillet or full penetration welds shall be used for the weldments. Details shall be submitted to the Engineer for approval.

Structural steel scupper frames and downspouts, when utilized, shall be galvanized according to AASHTO M111.

As an alternate, fiberglass may be used for downspouts according to ASTM D2996 with a short-time rupture strength hoop tensile stress of 30,000 psi min. in lieu of the cast iron or structural steel.

Exterior surfaces of downspouts and exterior exposed surfaces of the scupper frame below deck shall be treated as specified on sheet 22 of 42 .

The Contractor shall take appropriate measures to assure that Protective Coat is not applied to the scupper.

Cost of the grate, frame, downspout, anchor rods, nuts and washers including complete installation of the scupper shall be paid for at the contract unit price for Drainage Scuppers, DS-11.

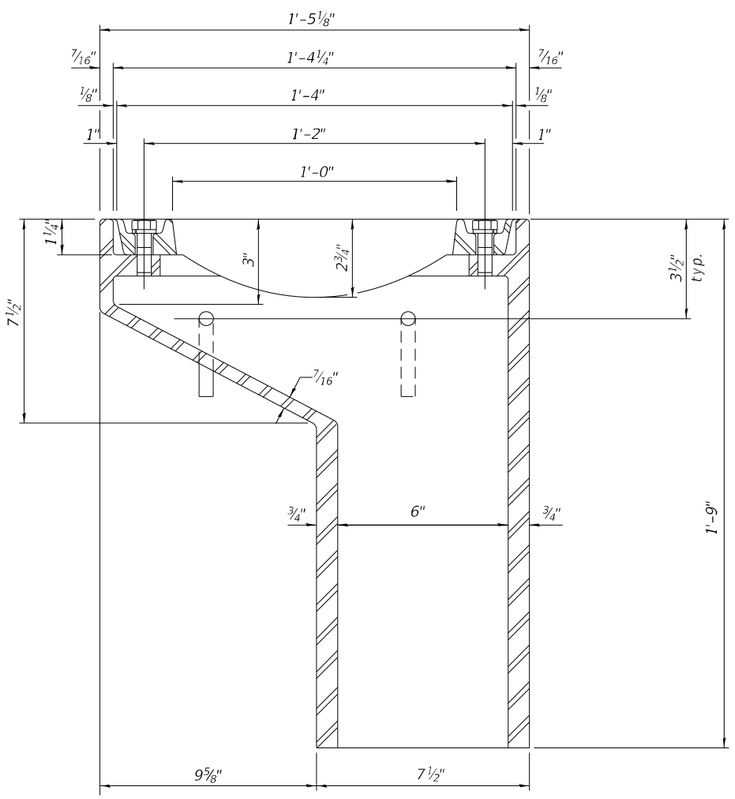

SECTION A-A

See sheet 22 of 42 for scupper location relative to parapet.

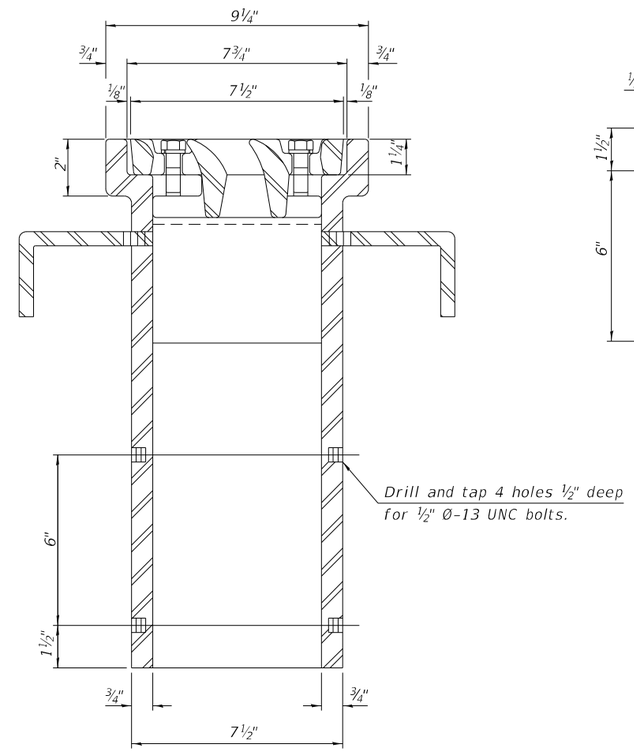

SECTION B-B

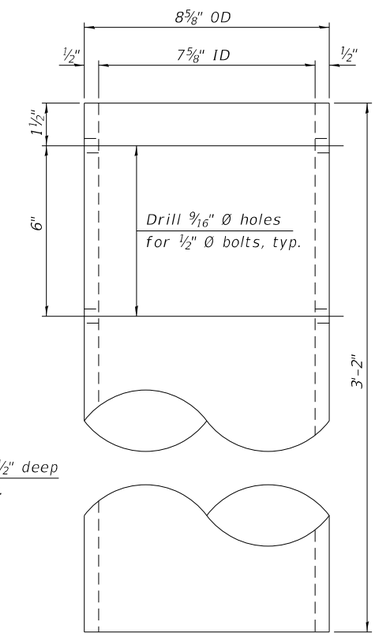

DOWNSPOUT

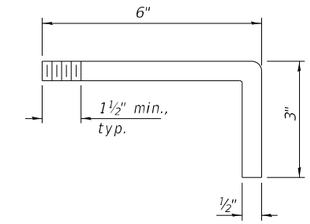

ANCHOR ROD DETAIL

BILL OF MATERIAL

Item	Unit	Quantity
Drainage Scuppers, DS-11	Each	18

DS-11 2-1-2023

MODEL: Default
FILE NAME: pw://gfnet-pw.bentley.com:gfnet-pw-01/Documents/Projects/68096/Project Working/A_CADD/62U83-Contract1/Sheets/045-0006/0450006-62U83-023-DS11

BURNS McDONNELL	USER NAME = jstarzyk	DESIGNED - ECK	REVISED -
		CHECKED - GEK	REVISED -
	PLOT SCALE = 2.0000 ' / in.	DRAWN - BAH	REVISED -
	PLOT DATE = 3/20/2024	CHECKED - ECK	REVISED -

STATE OF ILLINOIS
DEPARTMENT OF TRANSPORTATION

DRAINAGE SCUPPER, DS-11
STRUCTURE NO. 045-0006

SHEET 23 OF 42 SHEETS

F.A.P. RTE.	SECTION	COUNTY	TOTAL SHEETS	SHEET NO.
345	FAP 345-23-BR	KANE	379	154

CONTRACT NO. 62U83

ILLINOIS | FED. AID PROJECT

3/20/2024 4:36:10 PM

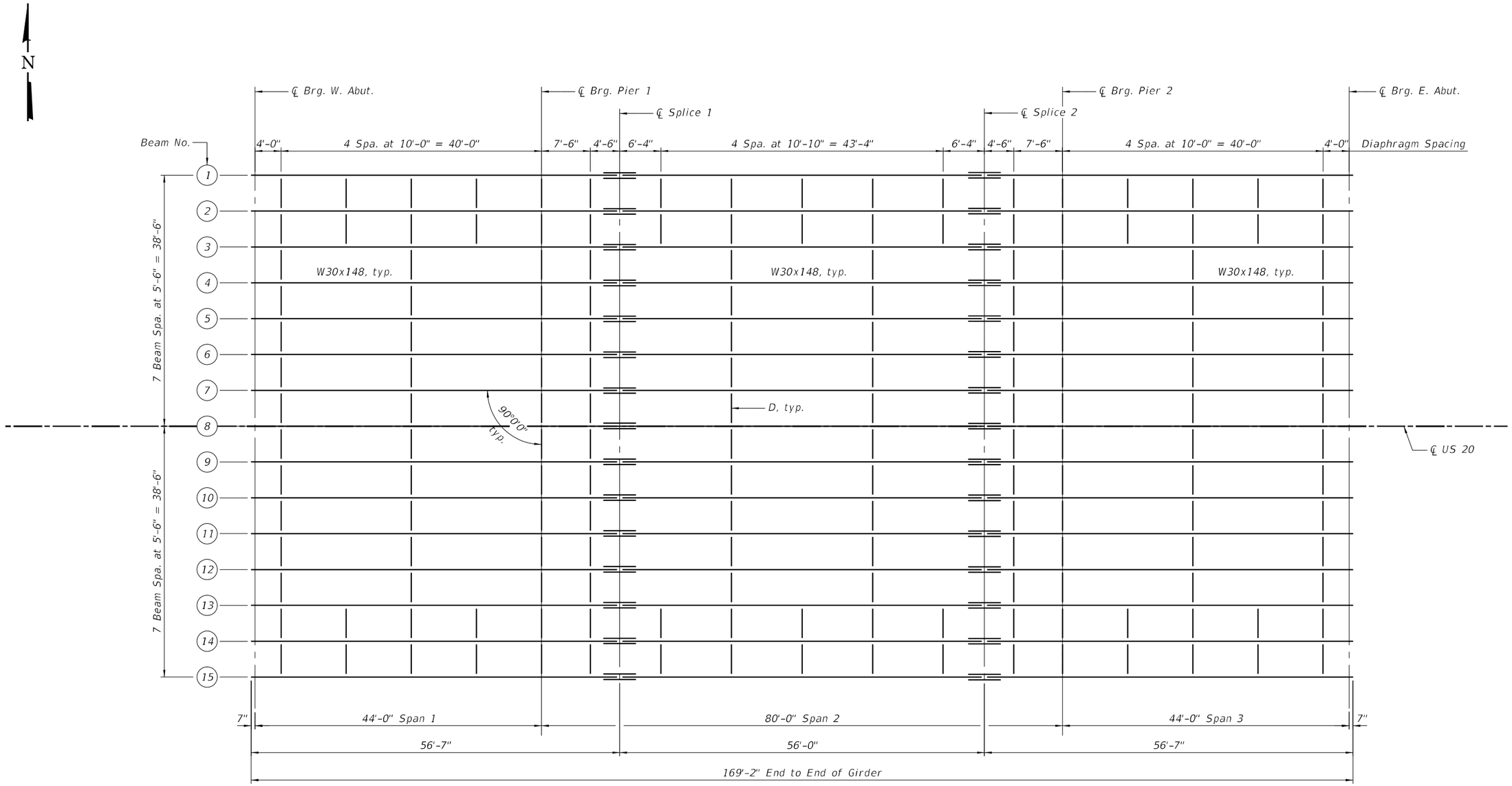

FRAMING PLAN

NOTES:

1. See sheet 25 of 42 for notes, splice and diaphragm details.

MODEL: Default
FILE NAME: pw://gfnet-pw.bentley.com:gfnet-pw01/Documents/Projects/68096/Project Working/A_CADD/62U83-Contract1/Sheets/045-0006/0450006-62U83-024-FRM

3/20/2024 4:36:14 PM

BURNS McDONNELL	USER NAME = jstarzyk	DESIGNED - ECK	REVISED -	STATE OF ILLINOIS DEPARTMENT OF TRANSPORTATION	FRAMING PLAN STRUCTURE NO. 045-0006
		CHECKED - GEK	REVISED -		
	PLOT SCALE = 16.0000 ' / in.	DRAWN - BAH	REVISED -		
	PLOT DATE = 3/20/2024	CHECKED - ECK	REVISED -		SHEET 24 OF 42 SHEETS

F.A.P. RTE.	SECTION	COUNTY	TOTAL SHEETS	SHEET NO.
345	FAP 345-23-BR	KANE	379	155
		CONTRACT NO. 62U83		
		ILLINOIS	FED. AID PROJECT	

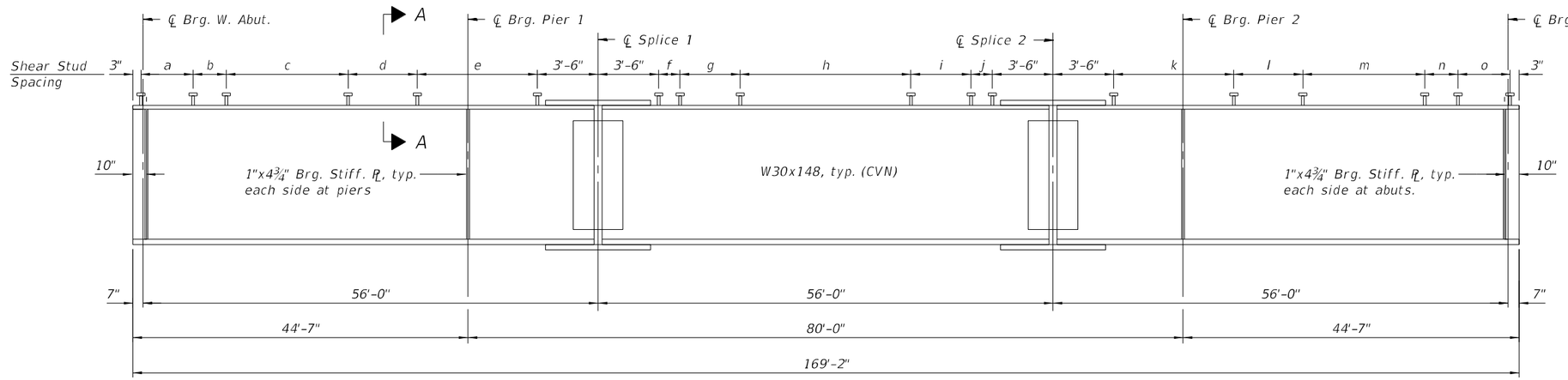

BEAM ELEVATION

SHEAR STUD TABLE

Location	Stud Spacing
a	13 Spa. at 6" = 6'-6"
b	5 Spa. at 8" = 3'-4"
c	21 Spa. at 9" = 15'-9"
d	17 Spa. at 6" = 8'-6"
e	15 Spa. at 15" = 18'-9"
f	8 Spa. at 7" = 4'-8"
g	14 Spa. at 8" = 9'-4"
h	28 Spa. at 9" = 21'-0"
i	14 Spa. at 8" = 9'-4"
j	8 Spa. at 7" = 4'-8"
k	15 Spa. at 15" = 18'-9"
l	17 Spa. at 6" = 8'-6"
m	21 Spa. at 9" = 15'-9"
n	5 Spa. at 8" = 3'-4"
o	13 Spa. at 6" = 6'-6"

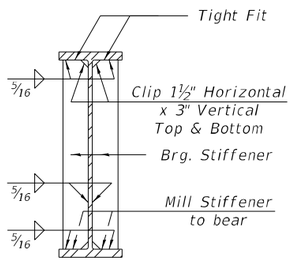

BEARING STIFFENER DETAIL

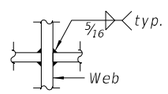

WEB WELD DETAIL

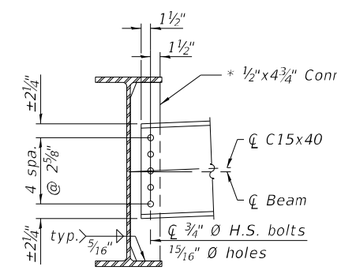

INTERIOR DIAPHRAGM - D

(168 Required)

* Brg. Stiffener shall be used in lieu of Connection PL at piers.

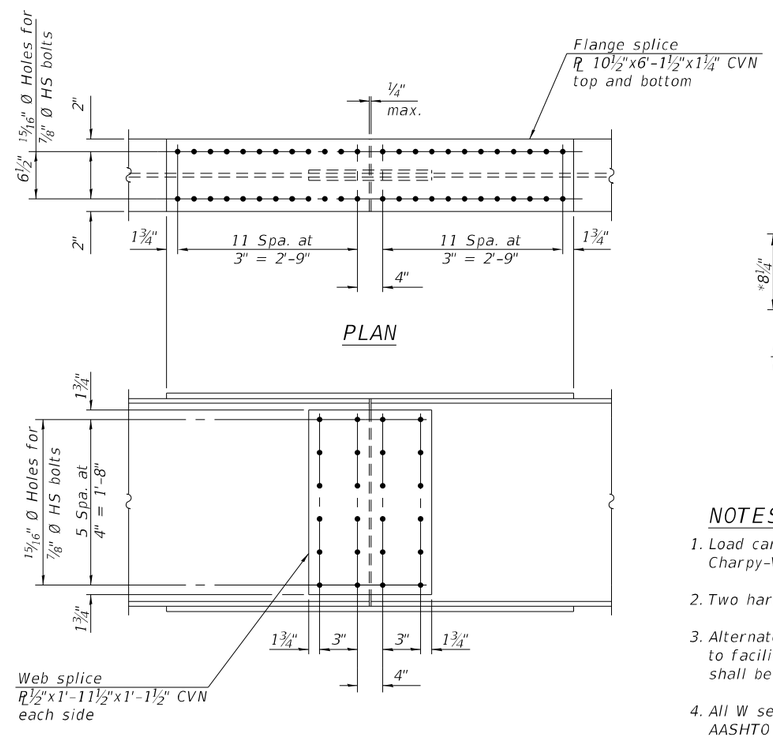

PLAN

ELEVATION

SPLICE DETAIL

(30 Required)

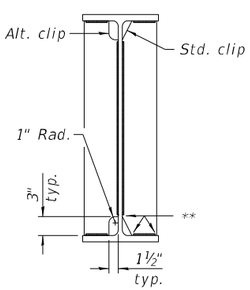

WELD LIMITS AND CLIP DETAILS

** Stop welds ¼" (±⅛") from edges as shown, typ.

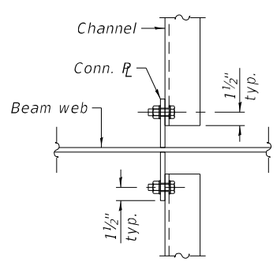

DETAIL A

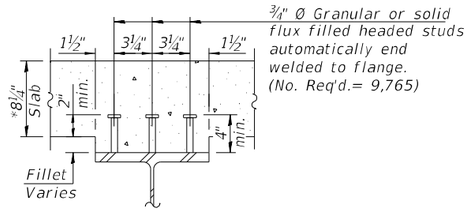

SECTION A-A

*Prior to Grinding.

NOTES:

1. Load carrying components designated "CVN" shall conform to the Charpy-V-Notch Impact Energy Requirement, Zone 2.
2. Two hardened washers required for each set of oversized holes.
3. Alternate channels of equal depth and larger weight are permitted to facilitate material acquisition. Alternate channels, if utilized, shall be provided at no additional cost to the Department.
4. All W sections, splice plates and bearing stiffeners shall be AASHTO M270, Grade 50.
5. All diaphragms shall be installed as steel is erected and secured with erection pins and bolts except as otherwise noted. Individual diaphragms at supports may be temporarily disconnected to install bearing anchor rods.

INTERIOR BEAM MOMENT TABLE				
		0.4 Span 1 or 0.6 Span 3	Piers	0.5 Span 2
I_s	(in^4)	6,680	6,680	6,680
$I_c(n)$	(in^4)	17,974	–	17,974
$I_c(3n)$	(in^4)	12,792	–	12,792
$I_c(cr)$	(in^4)	–	8,554	–
S_s	(in^3)	435	435	435
$S_c(n)$	(in^3)	653	–	653
$S_c(3n)$	(in^3)	581	–	581
$S_c(cr)$	(in^3)	–	492	–
S_x	(in^3)	646	479	607
DC1	(k/')	0.806	0.806	0.806
M_{DC1}	('k)	40	344	266
DC2	(k/')	0.550	0.550	0.550
M_{DC2}	('k)	28	250	190
DW	(k/')	0.275	0.275	0.275
M_{DW}	('k)	14	125	95
LLDF		0.554	0.508	0.475
M_{LL+IM}	('k)	394	512	550
f_ℓ (Strength I)	(ksi)	–	–	–
$M_u + \frac{1}{3} f_\ell S_x$	('k)	796	1,826	1,675
$\phi_f M_n$	('k)	3,127	–	3,127
f_s DC1	(ksi)	1.10	9.49	7.33
f_s DC2	(ksi)	0.58	6.10	3.92
f_s DW	(ksi)	0.29	3.05	1.96
f_s (LL+IM)	(ksi)	7.24	12.48	10.11
f_ℓ (Service II)	(ksi)	–	–	–
$f_s + {}^{f_\ell}/_2$ (Service II)	(ksi)	11.38	34.86	26.36
Service II Resistance	(ksi)	47.50	47.50	47.50
$f_s + {}^{f_\ell}/_3$ (Strength I)	(ksi)	15.21	45.89	34.70
$\phi_f F_n$	(ksi)	–	50.00	–
V_f	(k)	40.55	47.30	37.35

INTERIOR BEAM REACTION TABLE			
		Abutments	Piers
LLDF		0.634	0.634
OCF		1.0	1.0
R_{DC1}	(k)	17.2	55.3
R_{DC2}	(k)	6.4	39.8
R_{DW}	(k)	3.2	19.9
R_{LL}	(k)	42.8	75.1
R_{Im}	(k)	11.3	14.8
R_{Total} (Strength I)(Impact)	(k)	129.0	306.1
R_{Total} (Strength I)(No Impact)	(k)	109.2	280.2

I_s, S_s : Non-composite moment of inertia and section modulus of the steel section used for computing f_s(Total-Strength I, and Service II) due to non-composite dead loads ($in.^4$ and $in.^3$).

$I_c(n)$, $S_c(n)$: Composite moment of inertia and section modulus of the steel and deck based upon the modular ratio, "n", used for computing f_s(Total-Strength I, and Service II) in uncracked sections due to short-term composite live loads ($in.^4$ and $in.^3$).

$I_c(3n)$, $S_c(3n)$: Composite moment of inertia and section modulus of the steel and deck based upon 3 times the modular ratio, "3n", used for computing f_s(Total-Strength I, and Service II) in uncracked sections, due to long-term composite (superimposed) dead loads ($in.^4$ and $in.^3$).

$I_c(cr)$, $S_c(cr)$: Composite moment of inertia and section modulus of the steel and longitudinal deck reinforcement, used for computing f_s (Total-Strength I and Service II) in cracked sections, due to both short-term composite live loads and long-term composite (superimposed) dead loads ($in.^4$ and $in.^3$).

S_x : Section modulus about the major axis of a section to the controlling flange, tension or compression, taken as yield moment with respect to the controlling flange over the yield strength of the controlling flange ($in.^3$).

DC1: Un-factored non-composite dead load (kips/ft.).

M_{DC1} : Un-factored moment due to non-composite dead load (kip-ft.).

DC2: Un-factored long-term composite (superimposed excluding future wearing surface) dead load (kips/ft.).

M_{DC2} : Un-factored moment due to long-term composite (superimposed excluding future wearing surface) dead load (kip-ft.).

DW: Un-factored long-term composite (superimposed future wearing surface only) dead load (kips/ft.).

M_{DW} : Un-factored moment due to long-term composite (superimposed future wearing surface only) dead load (kip-ft.).

LLDF: Live Load Distribution Factor for moment and shear computed according to Article 4.6.2.2 and further IDOT provisions.

M_{LL+IM}: Un-factored live load moment plus dynamic load allowance (impact) (kip-ft.).

M_u : Strength I load combination of factored design moments (kip-ft.).
$1.25\ (M_{DC1} + M_{DC2}) + 1.5\ M_{DW} + 1.75\ M_{LL+IM}$

f_ℓ : Factored calculated flange lateral bending stress as calculated using Article 6.10.1.6 and as further simplified by IDOT provisions (ksi).

$\phi_f M_n$: Factored nominal flexural resistance of the section determined as specified in Article 6.10.7.1 or A6 as applicable (kip-ft.).

f_s DC1: Un-factored stress at edge of flange for controlling steel flange due to vertical non-composite dead loads as calculated below (ksi).
M_{DC1} / S_s

f_s DC2: Un-factored stress at edge of flange for controlling steel flange due to vertical composite dead loads as calculated below (ksi).
$M_{DC2} / S_c(3n)$ or $M_{DC2} / S_c(cr)$ as applicable.

f_s DW: Un-factored stress at edge of flange for controlling steel flange due to vertical composite future wearing surface loads as calculated below (ksi).
$M_{DW} / S_c(3n)$ or $M_{DW} / S_c(cr)$ as applicable.

f_s (LL + IM): Un-factored stress at edge of flange for controlling steel flange due to vertical composite live load plus impact loads as calculated below (ksi).
$M_{LL+IM} / S_c(n)$ or $M_{LL+IM} / S_c(cr)$ as applicable.

$f_s + f_\ell/2$ (Service II): Sum of stresses as computed below (ksi).
f_s DC1 + f_s DC2 + f_s DW + 1.3 f_s (LL + IM) + $f_\ell/2$

Service II Resistance: Composite ($0.95R_hF_{yf}$) or noncomposite ($0.80R_hF_{yf}$) stress capacity according to Article 6.10.4.2 (ksi).

$f_s + f_\ell/3$ (Strength I): Sum of stresses as computed below on non-compact sections (ksi).
1.25 (f_s DC1 + f_s DC2) + 1.5 f_s DW + 1.75 f_s (LL + IM) + $f_\ell/3$

$\phi_f F_n$: Factored nominal flexural resistance of the section as specified in Article 6.10.7.2 or 6.10.8 as applicable (ksi).

V_f : Maximum factored shear range in span computed according to Article 6.10.10.

OCF: Obtuse Correction Factor according to Article 4.6.2.2.3c or as further simplified by IDOT provisions.

R_{DC1} : Un-factored reaction due to non-composite dead load (kip).

R_{DC2} : Un-factored reaction due to long-term composite (superimposed excluding future wearing surface) dead load (kip).

R_{DW} : Un-factored reaction due to long-term composite (superimposed future wearing surface only) dead load (kip).

R_{LL} : Un-factored live load reaction (kip).

R_{IM} : Un-factored dynamic load allowance (impact) (kip).

R_{Total} (Strength I)(Impact): Strength I load combination of factored design reactions (kip).
$1.25\ (R_{DC1} + R_{DC2}) + 1.5R_{DW} + 1.75\ (R_{LL} + R_{IM})$

R_{Total} (Strength I)(No Impact): Strength I load combination of factored design reactions, not including dynamic load allowance (Impact) (kip).
$1.25\ (R_{DC1} + R_{DC2}) + 1.5R_{DW} + 1.75\ (R_{LL})$

TOP OF BEAM ELEVATIONS

(For Fabrication Only)

Beam No.	℄ Brg. W. Abut.	℄ Pier 1	℄ Splice 1	℄ Splice 2	℄ Pier 2	℄ Brg. E. Abut.
1	752.77	752.78	752.79	752.64	752.57	752.32
2	753.09	753.04	753.03	752.88	752.83	752.64
3	753.20	753.15	753.14	752.99	752.94	752.75
4	753.29	753.24	753.23	753.08	753.03	752.84
5	753.37	753.33	753.31	753.17	753.11	752.92
6	753.45	753.41	753.40	753.25	753.20	753.00
7	753.54	753.49	753.48	753.33	753.28	753.09
8	753.62	753.57	753.56	753.41	753.36	753.17
9	753.54	753.49	753.48	753.33	753.28	753.09
10	753.45	753.41	753.40	753.25	753.20	753.00
11	753.37	753.33	753.31	753.17	753.11	752.92
12	753.29	753.24	753.23	753.08	753.03	752.84
13	753.20	753.15	753.14	752.99	752.94	752.75
14	753.09	753.04	753.03	752.88	752.83	752.64
15	752.77	752.78	752.79	752.64	752.57	752.32

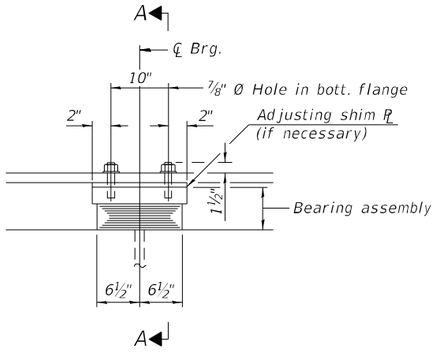

ELEVATION

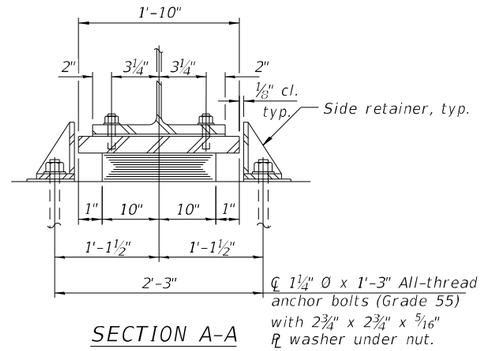

SECTION A-A

TYPE I ELASTOMERIC EXP. BRG.

(Piers 1 & 2)

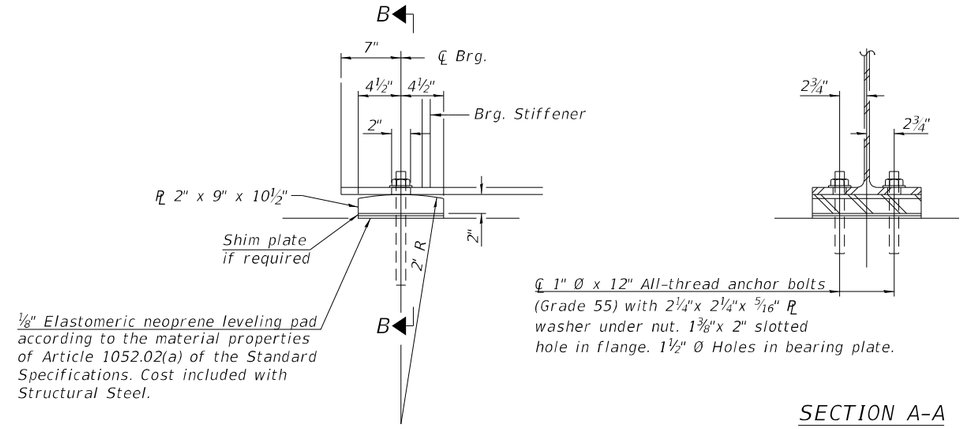

SECTION A-A

ELEVATION AT ABUTMENT

FIXED BEARING

(E. & W. Abut.)
(30 req'd)

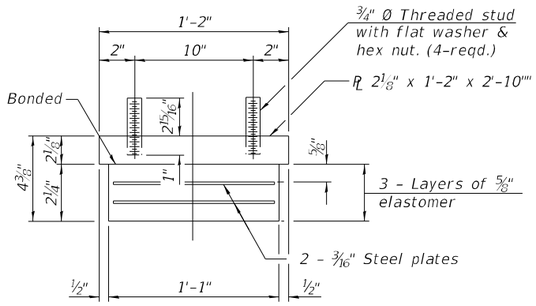

BEARING ASSEMBLY

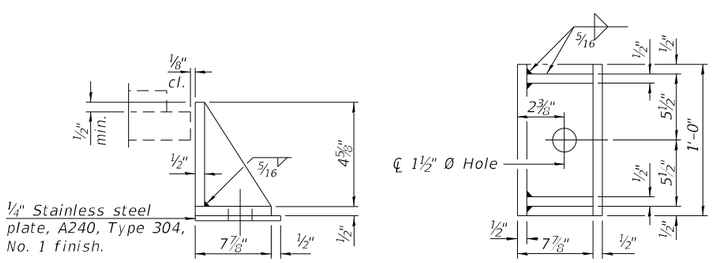

SIDE RETAINER

Equivalent rolled angle with stiffeners
will be allowed in lieu of welded plates.

NOTES:

1. Structural steel plates of the Bearing assembly shall conform to the requirement of AASHTO M270 Grade 50.
2. Side retainers and stainless steel plates shall be included in the cost of Elastomeric Bearing Assembly, Type I.
3. Anchor bolts and side retainers at all supports shall be installed as each member is erected unless an equivalent temporary means of lateral restraint is used.
4. Two ⅛" adjusting shims shall be provided for each bearing in addition to all other plates and shims and placed as shown on the bearing details.
5. Shim plates shall not be placed under bearing assembly.
6. Cost of field drilling included in cost of Elastomeric Bearing Assembly, Type I.
7. Drilled and set anchors shall be installed according to Article 521.06 of the Standard Specifications.
8. The cost of fabricating and installing the fixed bearing assembly and shim plates will be paid for as Furnishing and Erecting Structural Steel.

BILL OF MATERIAL

Item	Unit	Total
Elastomeric Bearing Assembly Type I	Each	30
Anchor Bolts, 1"	Each	60
Anchor Bolts, 1¼"	Each	60

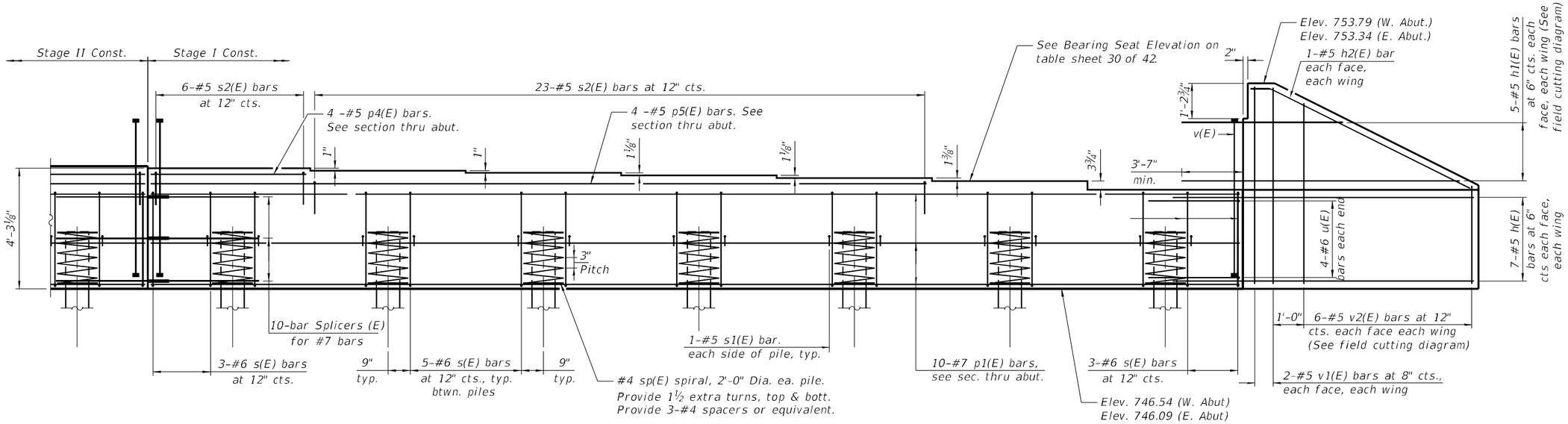

PARTIAL ELEVATION

(E. Abut. shown, W. Abut. mirrored)

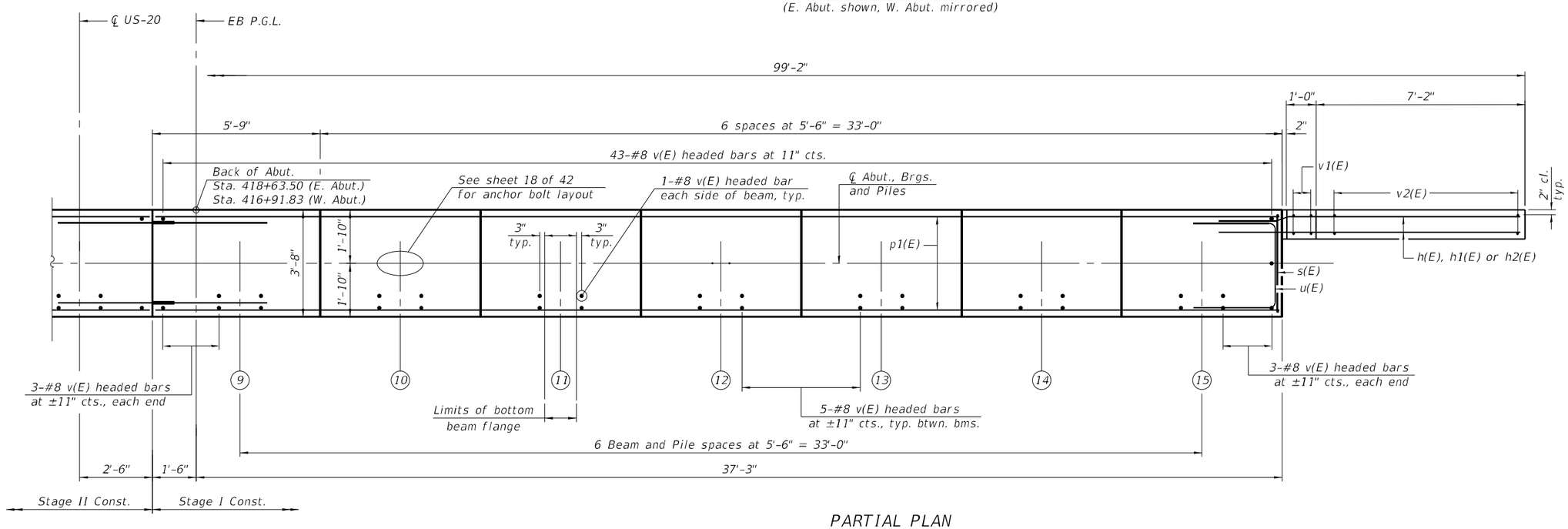

PARTIAL PLAN

(E. Abut. shown, W. Abut. mirrored)

NOTE:

1. See Sheet 30 of 42 for pile data, bill of materials and additional notes.
2. See Sheet 30 of 42 for Section thru Abutment.

MODEL: Default
FILE NAME: pw://gfnet-pw.bentley.com:gfnet-pw01/Documents/Projects/68096/Project Working/A_CADD/62U83-Contract1/Sheets/045-0006/0450006-62U83-028-ABUT2
3/20/2024 4:36:29 PM

BURNS McDONNELL

USER NAME = jstarzyk	DESIGNED - ECK	REVISED -	
	CHECKED - GEK	REVISED -	
PLOT SCALE = 4.0000 ' / in.	DRAWN - BAH	REVISED -	
PLOT DATE = 3/20/2024	CHECKED - ECK	REVISED -	

STATE OF ILLINOIS
DEPARTMENT OF TRANSPORTATION

ABUTMENTS I
STRUCTURE NO. 045-0006

SHEET 28 OF 42 SHEETS

F.A.P. RTE.	SECTION	COUNTY	TOTAL SHEETS	SHEET NO.
345	FAP 345-23-BR	KANE	379	159
		CONTRACT NO. 62U83		
		ILLINOIS	FED. AID PROJECT	

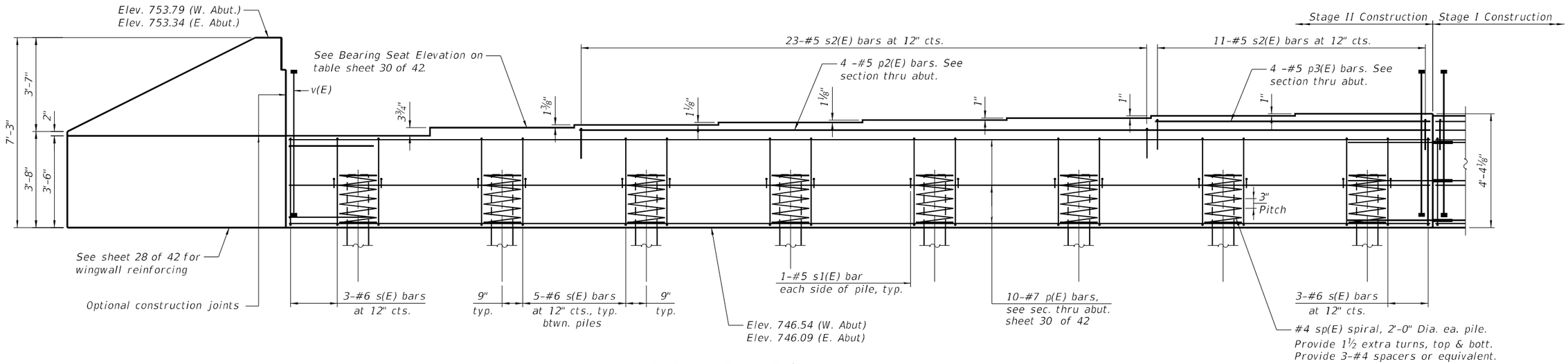

PARTIAL ELEVATION

(E. Abut. shown, W. Abut. mirrored)

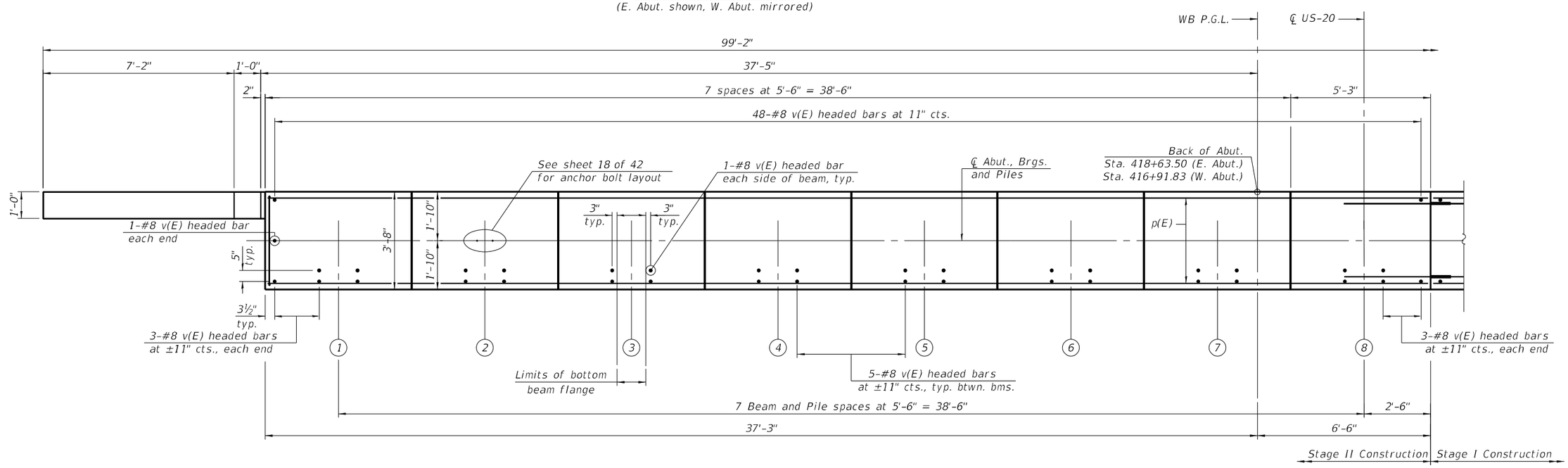

PARTIAL PLAN

(E. Abut. Shown, W. Abut. Mirrored)

NOTE:

1. See Sheet 30 of 42 for pile data, bill of materials and additional notes.
2. See Sheet 30 of 42 for Section thru Abutment.
3. Wingwall Dimensions typical for all walls.

MODEL: Default
FILE NAME: pw://gfnet-pw.bentley.com:gfnet-pw-01/Documents/Projects/68096/Project Working/A_CADD/62U83-Contract1/Sheets/045-0006/0450006-62U83-029-ABUT1

BURNS McDONNELL	USER NAME = jstarzyk	DESIGNED - ECK	REVISED -	STATE OF ILLINOIS DEPARTMENT OF TRANSPORTATION	ABUTMENTS II STRUCTURE NO. 045-0006	F.A.P. RTE. 345	SECTION FAP 345-23-BR	COUNTY KANE
		CHECKED - GEK	REVISED -			TOTAL SHEETS 379	SHEET NO. 160	
	PLOT SCALE = 4.0000 ' / in.	DRAWN - BAH	REVISED -			CONTRACT NO. 62U83		
	PLOT DATE = 3/20/2024	CHECKED - ECK	REVISED -		SHEET 29 OF 42 SHEETS	ILLINOIS	FED. AID PROJECT	

3/20/2024 4:36:32 PM

PILE DATA (W. ABUT.)

Type: Metal Shell - 12 in. dia. x 0.25 in. walls with pile shoes
Nominal Required Bearing: 392 kip
Factored Resistance Available: 216 kip
Est. Length: 35 ft.
No. Production Piles: 14
No. Test Piles: 1

PILE DATA (E. ABUT.)

Type: Metal Shell - 12 in. dia. x 0.25 in. walls with pile shoes
Nominal Required Bearing: 392 kip
Factored Resistance Available: 216 kip
Est. Length: 24 ft.
No. Production Piles: 14
No. Test Piles: 1

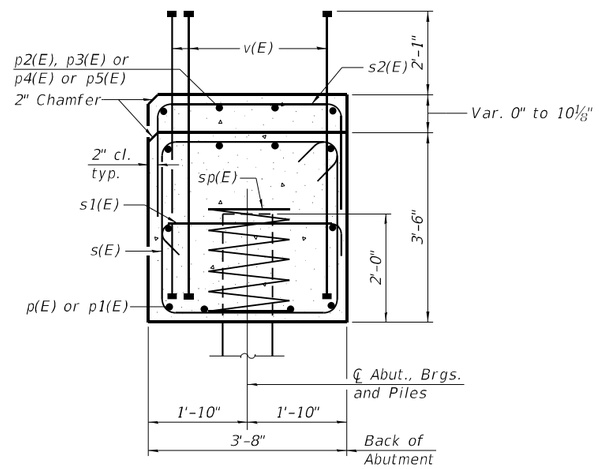

SEC. THRU ABUT.

BEARING SEAT ELEVATION TABLE

Location	W. Abut.	E. Abut.
Beam 1	750.04	749.59
Beam 2	750.35	749.90
Beam 3	750.46	750.01
Beam 4	750.55	750.10
Beam 5	750.64	750.19
Beam 6	750.72	750.27
Beam 7	750.80	750.35
Beam 8	750.88	750.43
Beam 9	750.80	750.35
Beam 10	750.72	750.27
Beam 11	750.64	750.19
Beam 12	750.55	750.10
Beam 13	750.46	750.01
Beam 14	750.35	749.90
Beam 15	750.04	749.59

BOTH ABUTMENTS BILL OF MATERIAL

Bar	No.	Size	Length	Shape
h(E)	32	#5	11'-9"	
h1(E)	20	#5	18'-8"	
h2(E)	8	#5	8'-8"	
p(E)	20	#7	43'-5"	
p1(E)	20	#7	38'-5"	
p2(E)	8	#5	32'-5"	
p3(E)	8	#5	10'-5"	
p4(E)	8	#5	5'-5"	
p5(E)	8	#5	27'-5"	
s(E)	154	#6	14'-4"	
s1(E)	60	#5	4'-4"	
s2(E)	126	#5	9'-10"	
* sp(E)	30	#4	2'-0"	
u(E)	16	#6	11'-10"	
v(E)	400	#8	5'-3"	
v1(E)	16	#5	6'-11"	
v2(E)	28	#5	9'-11"	
Structure Excavation			Cu. Yd.	658
Concrete Structures			Cu. Yd.	95.0
Reinforcement Bars, Epoxy Coated			Pound	17400
Furnishing Metal Shell Piles 12" x 0.250"			Foot	826
Driving Piles			Foot	826
Test Pile Metal Shells			Each	2
Pile Shoes			Each	30
Granular Backfill for Structures			Cu. Yd.	250
Geocomposite Wall Drain			Sq Yd.	138
Pipe Underdrains for Structures 4"			Foot	198
Bar Terminator			Each	800

* Length is height of spiral.

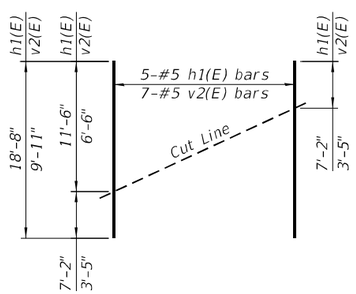

FIELD CUTTING DIAGRAM

Order h1(E) and v2(E) full length. Cut as shown and use remainder of bars in opposite wing.

BAR v(E)

(Headed. 800 - #8 Bar terminators)

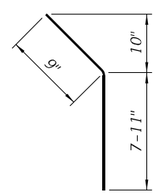

BAR h2(E)

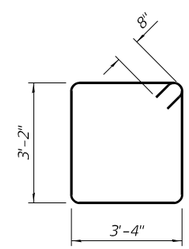

BAR s(E)

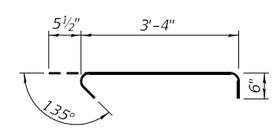

BAR s1(E)

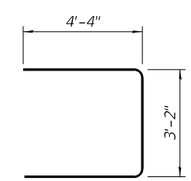

BAR u(E)

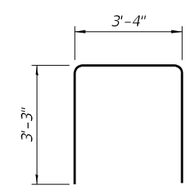

BAR s2(E)

NOTES:

1. Pour steps monolithically with cap.
2. Bar terminators will be paid for separately.
3. For details of piles see sheet 35 of 42 .

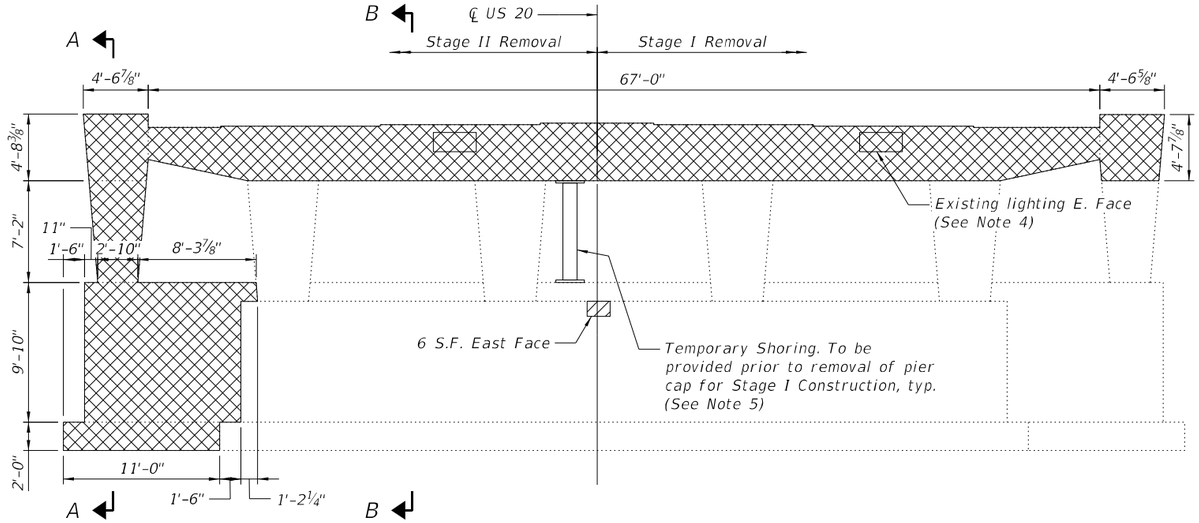

PIER 1 ELEVATION

(Looking East)

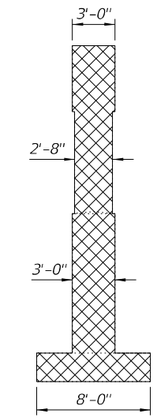

SECTION A-A

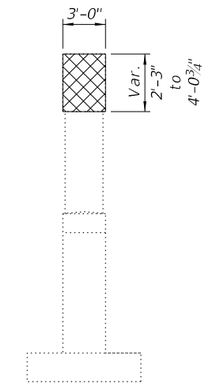

SECTION B-B

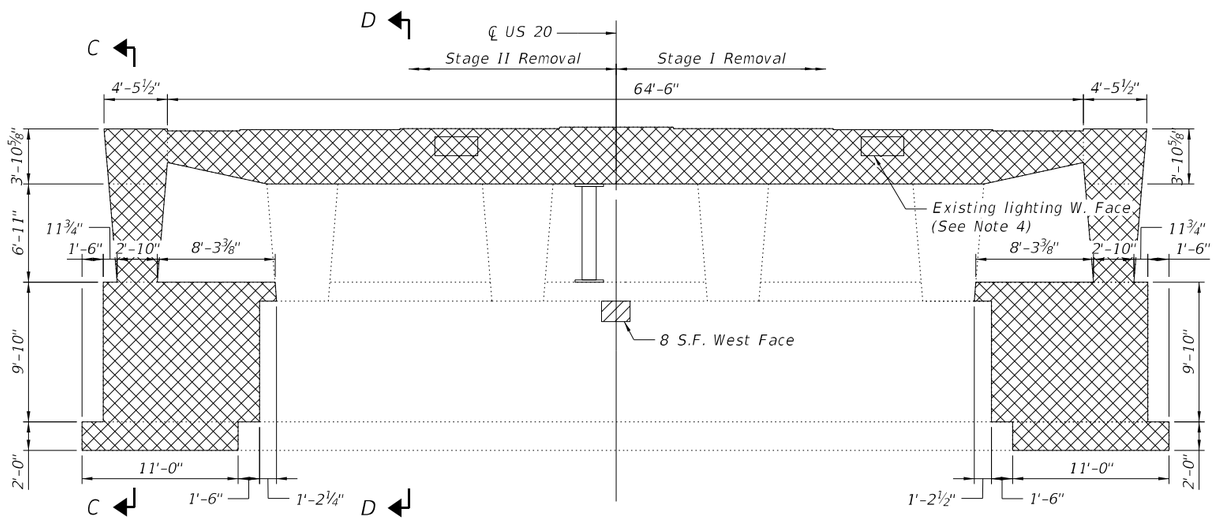

PIER 2 ELEVATION

(Looking East)

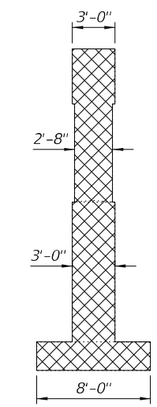

SECTION C-C

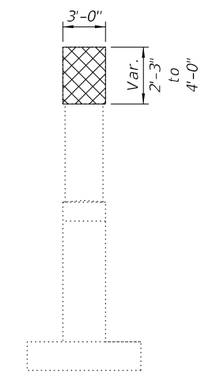

SECTION D-D

NOTES:

1. Existing reinforcement bars extending into concrete removal areas shall be cleaned, straightened and incorporated into new concrete. Cost included in "Concrete Removal".

2. Any reinforcement bars to be incorporated that are damaged during concrete removal operations shall be repaired or replaced using an approved bar splicer or anchorage system. Cost included with "Concrete Removal".

3. The ends of existing reinforcement bars which are cut & exposed shall be coated with epoxy. Cost included with "Concrete Removal".

4. Temporary lighting to be maintained during construction, see electrical plans.

5. Cost of temporary shoring and cribbing shall be included with Concrete Removal, according to Article 501.02 of the Std. Specs. The Contractor shall determine temporary shoring and cribbing loads required, but may reference existing plans (F.A. Route 426 (U.S. 20) Section 8R-HB-5(86) dated 1986) for beam reactions to aid in the design of temporary shoring and cribbing. Existing plans are available from the Department upon request given 30 days advanced notice.

LEGEND

Concrete Removal

Structural Repair of Concrete (Depth ≤ 5")

BILL OF MATERIAL

Item	Unit	Total
Concrete Removal	Cu. Yd.	125.7
Structural Repair of Concrete (Depth Equal to or Less than 5 Inches)	Sq. Ft.	14

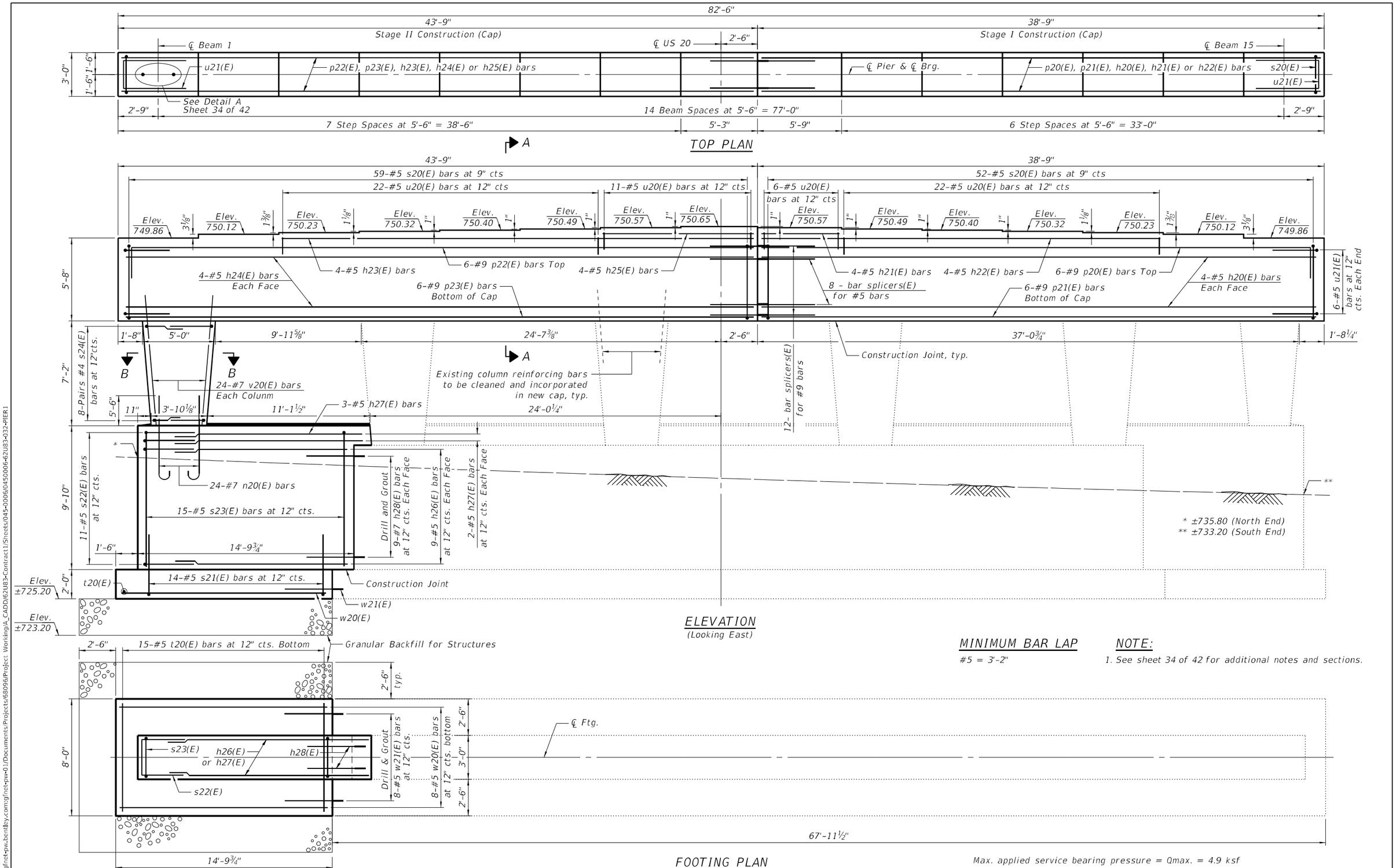

MINIMUM BAR LAP

#5 = 3'-2"

NOTE:

1. See sheet 34 of 42 for additional notes and sections.

MODEL: Default
FILE NAME: pw://gfnet-pw.bentley.com:gfnet-pw-01/Documents/Projects/68096/Project Working/A_CADD/62U83-Contract1/Sheets/045-0006/0450006-62U83-032-PIER1

3/20/2024 4:36:44 PM

BURNS McDONNELL

USER NAME = jstarzyk	DESIGNED - ECK	REVISED -	
	CHECKED - GEK	REVISED -	
PLOT SCALE = 6.0000 ' / in.	DRAWN - BAH	REVISED -	
PLOT DATE = 3/20/2024	CHECKED - ECK	REVISED -	

STATE OF ILLINOIS
DEPARTMENT OF TRANSPORTATION

PIER 1
STRUCTURE NO. 045-0006

SHEET 32 OF 42 SHEETS

F.A.P. RTE.	SECTION	COUNTY	TOTAL SHEETS	SHEET NO.
345	FAP 345-23-BR	KANE	379	163

CONTRACT NO. 62U83

ILLINOIS | FED. AID PROJECT

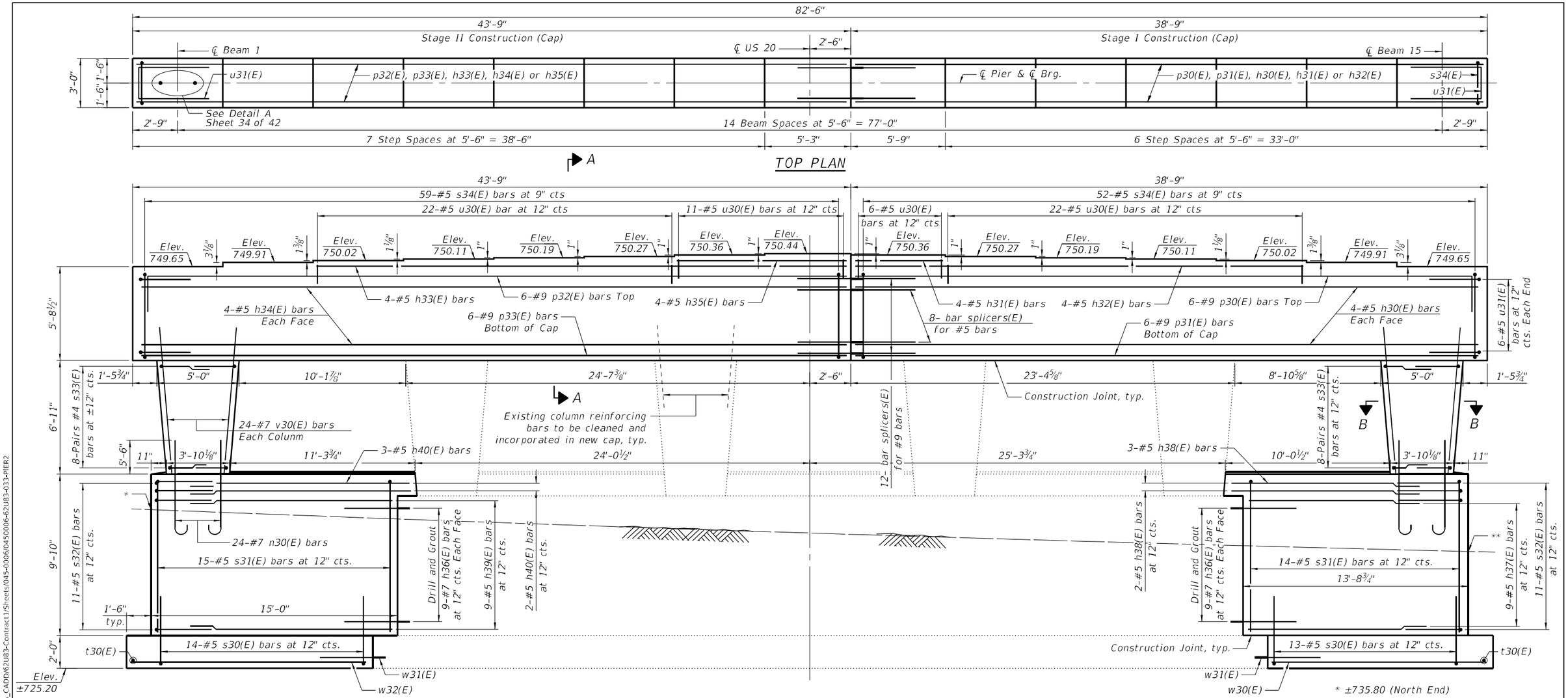

Max. applied service bearing pressure = Qmax. = 4.9 ksf

FOOTING PLAN

NOTE:

1. See sheet 34 of 42 for additional notes and sections.

MODEL: Default
FILE NAME: pw://gfnet-pw.bentley.com:gfnet-pw-01/Documents/Projects/68096/Project Working/A_CADD/62U83-Contract1/Sheets/045-0006/0450006-62U83-033-PIER2

3/20/2024 4:36:48 PM

BURNS McDONNELL

USER NAME = jstarzyk	DESIGNED - ECK	REVISED -	
	CHECKED - GEK	REVISED -	
PLOT SCALE = 6.0000 ' / in.	DRAWN - BAH	REVISED -	
PLOT DATE = 3/20/2024	CHECKED - ECK	REVISED -	

STATE OF ILLINOIS
DEPARTMENT OF TRANSPORTATION

PIER 2
STRUCTURE NO. 045-0006

SHEET 33 OF 42 SHEETS

F.A.P. RTE.	SECTION	COUNTY	TOTAL SHEETS	SHEET NO.
345	FAP 345-23-BR	KANE	379	164
		CONTRACT NO. 62U83		
		ILLINOIS FED. AID PROJECT		

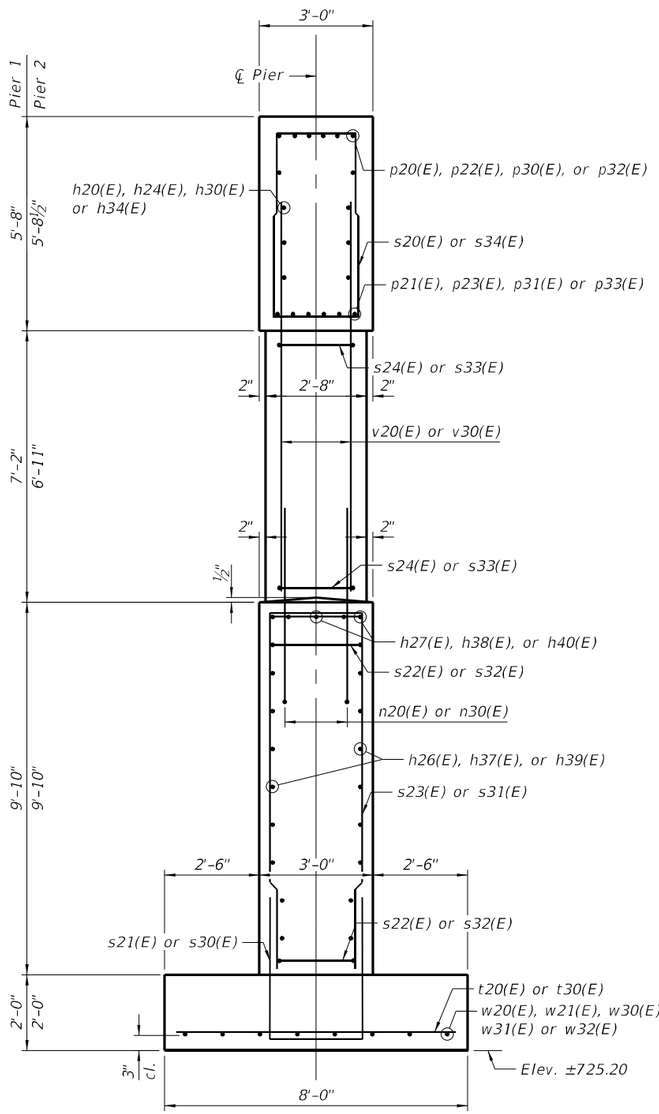

END VIEW

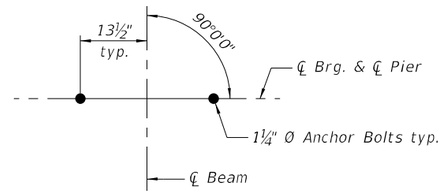

DETAIL A

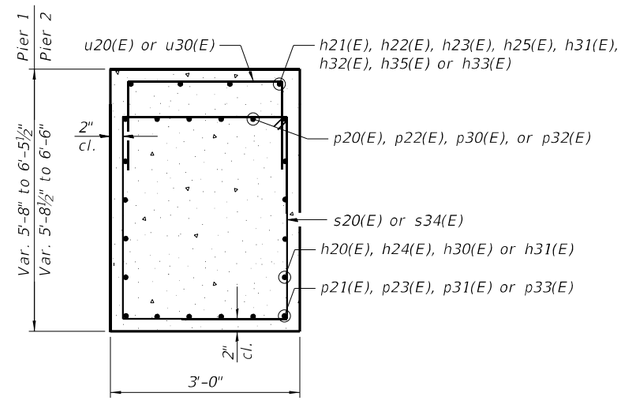

SECTION A-A

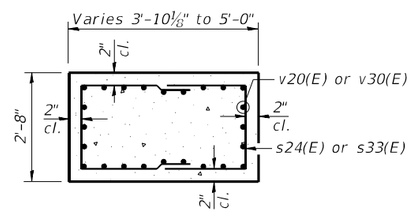

SECTION B-B

NOTES:

1. Pour steps monolithically with cap.
2. Space reinforcement in cap to miss anchor bolts.
3. Slope to drain between bearing seats.
4. See sheet 36 of 42 for Bar Splicer Details.
5. For Drill & Grout bars, adjust spacing as required to clear existing anchor bolts. Holes shall be drilled a minimum of 9" deep and a minimum of 6" from the edge of concrete. Cost shall be included with Reinforcement Bars, Epoxy Coated.
6. Prior to ordering any material, the Contractor shall verify in the field all bearing height and shim thickness dimensions.

PIER 1 BILL OF MATERIAL

Bar	No.	Size	Length	Shape
h20(E)	8	#5	38'-5"	
h21(E)	4	#5	5'-5"	
h22(E)	4	#5	27'-5"	
h23(E)	4	#5	32'-5"	
h24(E)	8	#5	43'-5"	
h25(E)	4	#5	10'-5"	
h26(E)	18	#5	14'-5"	
h27(E)	7	#5	15'-6"	
h28(E)	18	#7	4'-6"	
n20(E)	24	#7	8'-10"	
p20(E)	6	#9	40'-0"	
p21(E)	6	#9	38'-5"	
p22(E)	6	#9	45'-0"	
p23(E)	6	#9	43'-5"	
s20(E)	111	#5	16'-11"	
s21(E)	14	#5	12'-10"	
s22(E)	11	#5	8'-10"	
s23(E)	15	#5	21'-8"	
s24(E)	16	#4	9'-4"	
t20(E)	15	#5	7'-8"	
u20(E)	61	#5	7'-8"	
u21(E)	12	#5	9'-0"	
v20(E)	24	#7	10'-4"	
w20(E)	8	#5	14'-5"	
w21(E)	8	#5	3'-10"	
Structure Excavation			Cu. Yd.	112
Concrete Structures			Cu. Yd.	84.3
Reinforcement Bars, Epoxy Coated			Pound	9,460
Granular Backfill for Structures			Cu. Yd.	17

PIER 2 BILL OF MATERIAL

Bar	No.	Size	Length	Shape
h30(E)	8	#5	38'-5"	
h31(E)	4	#5	5'-5"	
h32(E)	4	#5	27'-5"	
h33(E)	4	#5	32'-5"	
h34(E)	8	#5	43'-5"	
h35(E)	4	#5	10'-5"	
h36(E)	36	#7	4'-6"	
h37(E)	18	#5	13'-4"	
h38(E)	7	#5	14'-6"	
h39(E)	18	#5	14'-8"	
h40(E)	7	#5	15'-8"	
n30(E)	48	#7	8'-10"	
p30(E)	6	#9	40'-0"	
p31(E)	6	#9	38'-5"	
p32(E)	6	#9	45'-0"	
p33(E)	6	#9	43'-5"	
s30(E)	27	#5	12'-10"	
s31(E)	29	#5	21'-8"	
s32(E)	22	#5	8'-10"	
s33(E)	32	#4	9'-4"	
s34(E)	111	#5	16'-11"	
t30(E)	29	#5	7'-8"	
u30(E)	61	#5	7'-8"	
u31(E)	12	#5	9'-0"	
v30(E)	48	#7	10'-1"	
w30(E)	8	#5	13'-5"	
w31(E)	16	#5	3'-10"	
w32(E)	8	#5	14'-8"	
Structure Excavation			Cu. Yd.	149
Concrete Structures			Cu. Yd.	111.3
Reinforcement Bars, Epoxy Coated			Pound	11,850

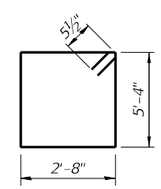

BAR s20(E) & s34(E)

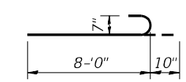

BAR n20(E) & n30(E)

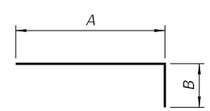

BARS p20(E), p22(E), p30(E) & p32(E)

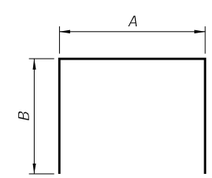

BARS s21(E), s22(E), s23(E), s24(E), s30(E), s31(E), s32(E) & s33(E)

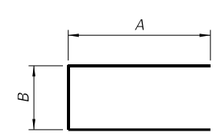

BARS u20(E), u21(E), u30(E) & u31(E)

A & B DIMENSIONS

Bar	A	B
p20(E)	38'-5"	1'-7"
p30(E)	38'-5"	1'-7"
p22(E)	43'-5"	1'-7"
p32(E)	43'-5"	1'-7"
s21(E)	2'-8"	5'-1"
s30(E)	2'-8"	5'-1"
s22(E)	2'-8"	3'-1"
s32(E)	2'-8"	3'-1"
s23(E)	2'-8"	9'-6"
s31(E)	2'-8"	9'-6"
s24(E)	2'-4"	3'-6"
s33(E)	2'-4"	3'-6"
u20(E)	2'-6"	2'-8"
u30(E)	2'-6"	2'-8"
u21(E)	3'-2"	2'-8"
u31(E)	3'-2"	2'-8"

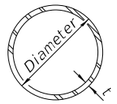

METAL SHELL PILE TABLE

Designation and outside diameter	Wall thickness t	Weight per foot (Lbs./ft.)	Inside volume (yd.³/ft.)
PP12	0.250"	31.40	0.0267
PP14	0.250"	36.75	0.0368
PP14	0.312"	45.65	0.0361
PP16	0.312"	52.32	0.0478
PP16	0.375"	62.64	0.0470

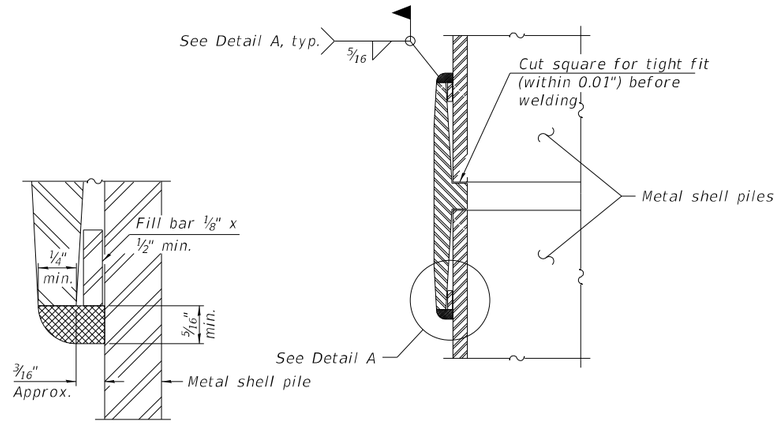

DETAIL A

WELDED COMMERCIAL SPLICE

Notes:
The 1/8" x 1/2" min. fill bar may be constructed of 2 bars with a 1/8" max. gap between them.
Pile segments shall be driven to solid contact with splicer before welding.

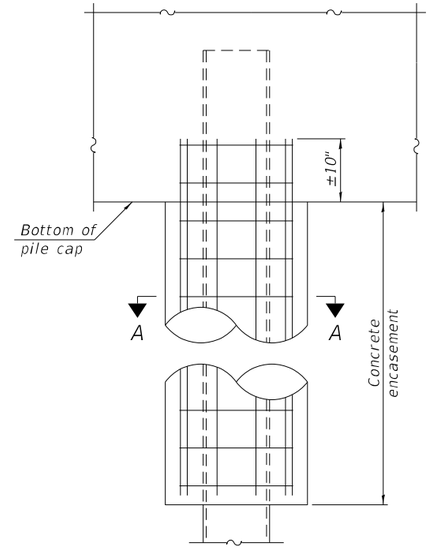

ELEVATION

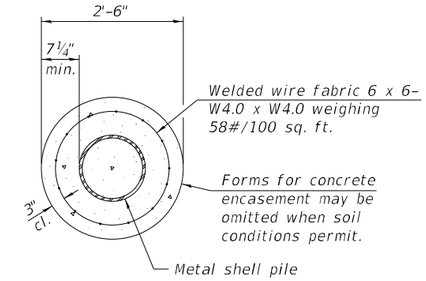

SECTION A-A

INDIVIDUAL PILE CONCRETE ENCASEMENT

(When specified)

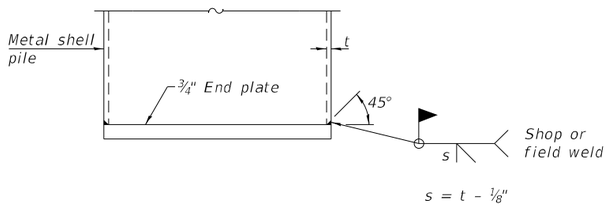

END PLATE ATTACHMENT

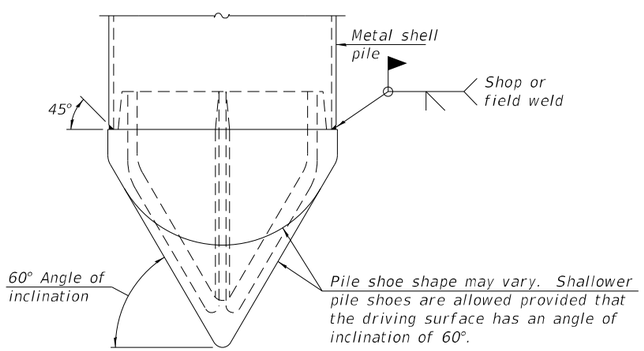

PILE SHOE ATTACHMENT

(When called for on the plans, the Contractor shall furnish metal shell pile shoes consisting of a single piece conical pile point as shown. The pile shoes shall be cast in one piece steel according to either ASTM A 148 Grade 80-50 or AASHTO M 103 Grade 65-35 and shall provide full bearing over the full circumference of the metal shell pile. The pile shoe shall have tapered leads to assure proper alignment and fitting and shall be secured to the pile with a circumferential weld).

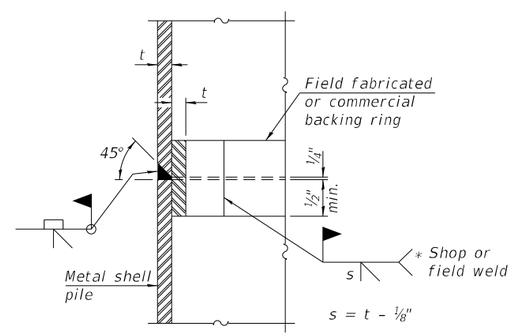

COMPLETE PENETRATION WELD SPLICE

* Field fabricated backing ring may be made from pile shell by removing segment to allow reducing circumference and vertically rejoin with partial joint penetration weld.

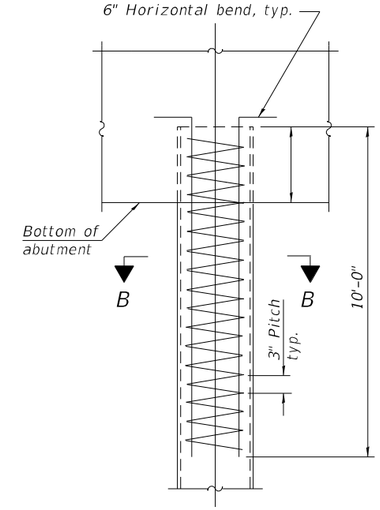

ELEVATION

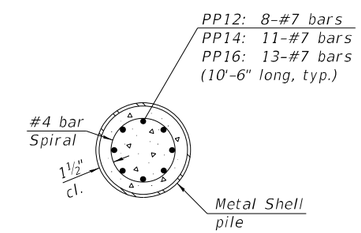

SECTION B-B

REINFORCEMENT AT ABUTMENTS

(Omit when concrete encasement is specified)

Note:
The metal shell piles shall be according to Article 1006.05 of the Standard Specifications.

F-MS 2-1-2023

BURNS McDONNELL	USER NAME = jstarzyk	DESIGNED - ECK	REVISED -	STATE OF ILLINOIS DEPARTMENT OF TRANSPORTATION	METAL SHELL PILE DETAILS STRUCTURE NO. 045-0006
		CHECKED - GEK	REVISED -		
	PLOT SCALE = 2.0000 ' / in.	DRAWN - BAH	REVISED -		
	PLOT DATE = 3/20/2024	CHECKED - ECK	REVISED -		SHEET 35 OF 42 SHEETS

F.A.P. RTE.	SECTION	COUNTY	TOTAL SHEETS	SHEET NO.
345	FAP 345-23-BR	KANE	379	166
		CONTRACT NO. 62U83		
		ILLINOIS	FED. AID PROJECT	

MODEL: Default
FILE NAME: pw://gfnet-pw.bentley.com:gfnet-pw-01/Documents/Projects/68096/Project Working/A_CADD/62U83-Contract1/Sheets/045-0006/0450006-62U83-035-PILE
3/20/2024 4:36:55 PM

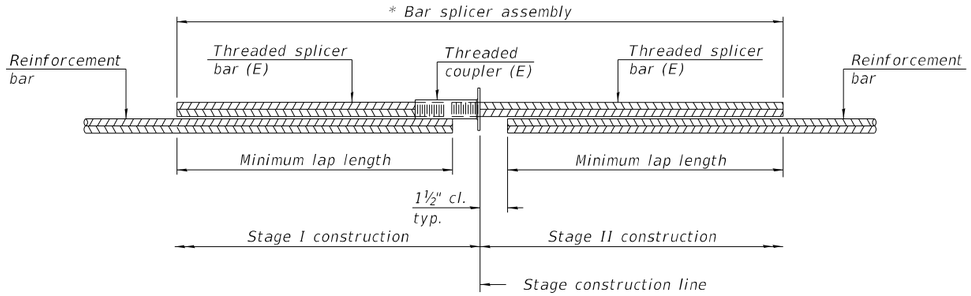

STANDARD BAR SPLICER ASSEMBLY PLAN

Only bar splicer assemblies are presented on the approved QPL list may be used.

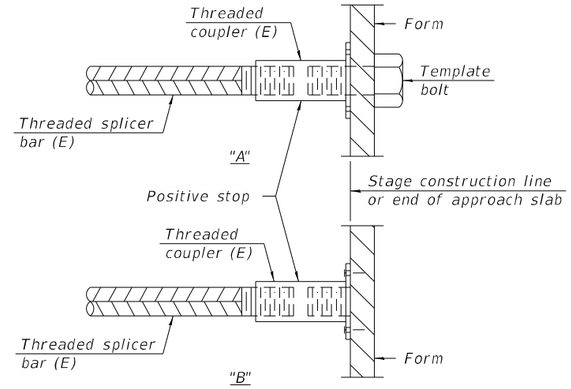

INSTALLATION AND SETTING METHODS

"A" : Set bar splicer assembly by means of a template bolt.
"B" : Set bar splicer assembly by nailing to wood forms or cementing to steel forms.
(E) : Indicates epoxy coating.

Threaded splicer bar length = min. lap length + 1½" + thread length

* Epoxy not required on Bar Splicer Assembly components used in conjunction with black bars.

Location	Bar size	No. assemblies required	Minimum lap length
Top of Deck	#5	268	3'-0"
Bottom of Deck	#5	204	3'-6"
West Approach	#5	46	3'-0"
West Approach	#8	60	4'-9"
W. Appr. Footing	#5	40	3'-2"
East Approach	#5	46	3'-0"
East Approach	#8	60	4'-9"
E. Appr. Footing	#5	40	3'-2"
West Diaphragm	#6	4	4'-0"
East Diaphragm	#6	4	4'-0"
West Abutment	#7	10	5'-0"
East Abutment	#7	10	5'-0"
Pier 1	#5	8	3'-7"
Pier 1	#9	12	6'-5"
Pier 2	#5	8	3'-7"
Pier 2	#9	12	6'-5"

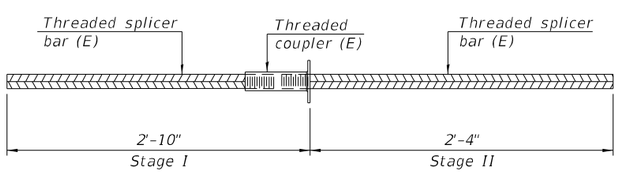

SPLICER BAR FOR CONCRETE DIAPHRAGM

Location	Bar size	No. assemblies required
West Diaphragm	#6	3
East Diaphragm	#6	3

NOTES:

1. Splicer bars shall be deformed with threaded ends and have a minimum 60 ksi yield strength.
2. All reinforcement shall be lapped and tied to the splicer bars.
3. Bar splicer assemblies shall be epoxy coated according to the requirements for reinforcement bars. See Section 508 of the Standard Specifications.
4. See approved list of bar splicer assemblies and mechanical splicers for alternatives.

Wang Engineering
wangeng@wangeng.com
1145 N Main Street
Lombard, IL 60148
Telephone: 630 953-9928
Fax: 630 953-9938

BORING LOG 45-0006-BSB-01

WEI Job No.: 121-03-01

Client: **Gannett Fleming**
Project: **US Route 20 From Randall Rd to Shales Parkway**
Location: **Elgin, Illinois**

Datum: NAVD 88
Elevation: 753.22 ft
North: 1949989.26 ft
East: 1001755.43 ft
Station: 1416+88.17
Offset: 25.35 LT

Elevation (ft)	SOIL AND ROCK DESCRIPTION	Depth (ft)	Sample No.	SPT Values (blw/6 in)	Qu (tsf)	Moisture Content (%)
753.03	3-inch thick ASPHALT --PAVEMENT--					
752.3	8-inch thick CONCRETE --PAVEMENT--					
	Medium dense, brown SANDY GRAVEL; damp --FILL-- --RDR 2--		1	6 3 7	NP	6
750.2	Brown, fine to coarse SAND, little gravel; damp --FILL--	5	2	4 6 4	NP	9
749.4	Stiff to very stiff, brown and gray SILTY CLAY LOAM to CLAY LOAM, trace gravel; damp --FILL-- --RDR 2--		3	2 2 1	1.00 P	17
		10	4	3 3 5	3.44 B	14
			5	4 7 8	2.00 P	14
		15	6	2 4 5	1.00 P	14
737.7	Medium stiff to very stiff, black to brown SILTY CLAY, trace gravel; damp --RDR 2--		7	7 4 5	1.80 B	24
		20	8	3 3 5	2.05 B	21

Elevation (ft)	SOIL AND ROCK DESCRIPTION	Depth (ft)	Sample No.	SPT Values (blw/6 in)	Qu (tsf)	Moisture Content (%)
	--L_L(%)=44, P_L(%)=14-- --%Gravel=8.2-- --%Sand=33.8-- --%Silt=34.2-- --%Clay=23.7-- --A-7-6 (14)--		9	4 10 9	0.50 P	21
729.0	Medium dense, brown, fine to coarse SAND, trace gravel; damp to saturated --RDR 2--	25	10	4 7 14	NR	
			11	8 6 7	NP	6
		30	12	6 7 9	NP	6
		35	13	7 6 8	NP	5
716.5	Medium stiff, gray CLAY LOAM, little gravel; moist --RDR 2-3--					
		40	14	6 20 20	0.50 P	15

GENERAL NOTES

Begin Drilling: **11-22-2021** Complete Drilling: **11-22-2021**
Drilling Contractor: **Wang Testing Services** Drill Rig: **20D50T [80%]**
Driller: **RH&JD** Logger: **D. You** Checked by: **C. Marin**
Drilling Method: **3.25" ID HSA; boring backfilled upon completion**

WATER LEVEL DATA

While Drilling: **36.50 ft**
At Completion of Drilling: **55.00 ft**
Time After Drilling: **NA**
Depth to Water: **NA**

The stratification lines represent the approximate boundary between soil types; the actual transition may be gradual.

WANGENGINC 121030I.GPJ WANGENG.GDT 4/19/22

BORING LOG 45-0006-BSB-01

Wang Engineering
wangeng@wangeng.com
1145 N Main Street
Lombard, IL 60148
Telephone: 630 953-9928
Fax: 630 953-9938

BORING LOG 45-0006-BSB-01

WEI Job No.: 121-03-01

Client: **Gannett Fleming**
Project: **US Route 20 From Randall Rd to Shales Parkway**
Location: **Elgin, Illinois**

Datum: NAVD 88
Elevation: 753.22 ft
North: 1949989.26 ft
East: 1001755.43 ft
Station: 1416+88.17
Offset: 25.35 LT

Elevation (ft)	SOIL AND ROCK DESCRIPTION	Depth (ft)	Sample No.	SPT Values (blw/6 in)	Qu (tsf)	Moisture Content (%)
	--rig chatter; possible cobbles--					
709.6	Very dense, gray GRAVEL; saturated --RDR 3--	45	15	50/5"	NP	5
706.5	Very stiff to hard, gray SILTY CLAY LOAM, trace gravel; damp --RDR 2--					
		50	16	4 7 10	2.62 B	14
		55	17	7 11 11	4.35 B	14
693.2	Boring terminated at 60.00 ft	60	18	6 7 10	4.35 B	14

GENERAL NOTES

Begin Drilling: **11-22-2021** Complete Drilling: **11-22-2021**
Drilling Contractor: **Wang Testing Services** Drill Rig: **20D50T [80%]**
Driller: **RH&JD** Logger: **D. You** Checked by: **C. Marin**
Drilling Method: **3.25" ID HSA; boring backfilled upon completion**

WATER LEVEL DATA

While Drilling: **36.50 ft**
At Completion of Drilling: **55.00 ft**
Time After Drilling: **NA**
Depth to Water: **NA**

The stratification lines represent the approximate boundary between soil types; the actual transition may be gradual.

WANGENGINC 121030I.GPJ WANGENG.GDT 4/19/22

BORING LOG 45-0006-BSB-01 (CONTINUED)

Wang Engineering
wangeng@wangeng.com
1145 N Main Street
Lombard, IL 60148
Telephone: 630 953-9928
Fax: 630 953-9938

BORING LOG 45-0006-BSB-02

WEI Job No.: 121-03-01

Client: **Gannett Fleming**
Project: **US Route 20 From Randall Rd to Shales Parkway**
Location: **Elgin, Illinois**

Datum: NAVD 88
Elevation: 752.18 ft
North: 1949993.48 ft
East: 1001964.71 ft
Station: 1418+97.49
Offset: 26.30 LT

Elevation (ft)	SOIL AND ROCK DESCRIPTION	Depth (ft)	Sample No.	SPT Values (blw/6 in)	Qu (tsf)	Moisture Content (%)
751.93	3-inch thick ASPHALT --PAVEMENT--					
751.2	9-inch thick CONCRETE --PAVEMENT--					
	Stiff to very stiff, brown SILTY CLAY LOAM to SILTY CLAY, trace to little gravel; damp --FILL-- --RDR 2--		1	4 7 7	2.00 P	13
		5	2	4 7 8	1.50 P	18
			3	2 3 5	2.50 P	12
		10	4	3 4 3	2.00 P	11
			5	2 6 3	1.15 B	19
		15	6	3 4 5	1.00 P	12
			7	5 4 12	1.00 P	13
732.9	Tan GRAVEL; damp	20	8	5 10 50/4"	1.64 B	13
731.7	--FILL-- --RDR 2-- Stiff, brown SILTY CLAY, trace gravel; damp --RDR 2--		9	6 5 8	1.50 P	19
728.4	Medium dense, brown SILT, trace gravel; damp --RDR 2--	25	10	5 9 9	NP	14
726.7	Very dense, brown SANDY GRAVEL; damp --RDR 2--		11	18 25 28	NP	3
724.2	Dense to very dense, brown and gray, fine to coarse SAND, some gravel; damp --RDR 2--	30	12	25 29 27	NP	3
		35	13	14 23 20	NP	3
715.4	--rig chatter; possible cobbles-- Medium dense to very dense, brown SANDY GRAVEL; saturated --RDR 2-3--	40	14	9 13 11	NP	8

GENERAL NOTES

Begin Drilling: **11-22-2021** Complete Drilling: **11-22-2021**
Drilling Contractor: **Wang Testing Services** Drill Rig: **20D50T [80%]**
Driller: **RH&JD** Logger: **D. You** Checked by: **C. Marin**
Drilling Method: **3.25" ID HSA; boring backfilled upon completion**

WATER LEVEL DATA

While Drilling: **38.50 ft**
At Completion of Drilling: **48.50 ft**
Time After Drilling: **NA**
Depth to Water: **NA**

The stratification lines represent the approximate boundary between soil types; the actual transition may be gradual.

WANGENGINC 121030I.GPJ WANGENG.GDT 4/19/22

BORING LOG 45-0006-BSB-02

Wang Engineering
wangeng@wangeng.com
1145 N Main Street
Lombard, IL 60148
Telephone: 630 953-9928
Fax: 630 953-9938

BORING LOG 45-0006-BSB-02

WEI Job No.: 121-03-01

Client: **Gannett Fleming**
Project: **US Route 20 From Randall Rd to Shales Parkway**
Location: **Elgin, Illinois**

Datum: NAVD 88
Elevation: 752.18 ft
North: 1949993.48 ft
East: 1001964.71 ft
Station: 1418+97.49
Offset: 26.30 LT

Elevation (ft)	SOIL AND ROCK DESCRIPTION	Depth (ft)	Sample No.	SPT Values (blw/6 in)	Qu (tsf)	Moisture Content (%)
		45	15	8 16 19	NP	7
	--rig chatter; possible cobbles--					
705.4	Very stiff, brown to gray SILTY CLAY LOAM, trace gravel; damp --RDR 2--	50	16	5 8 10	3.69 B	14
		55	17	5 7 8	2.53 B	14
695.4	Medium stiff, gray SILTY CLAY, trace gravel; damp --RDR 2--					
692.2	Boring terminated at 60.00 ft.	60	18	5 8 9	0.50 P	17

GENERAL NOTES

Begin Drilling: **11-22-2021** Complete Drilling: **11-22-2021**
Drilling Contractor: **Wang Testing Services** Drill Rig: **20D50T [80%]**
Driller: **RH&JD** Logger: **D. You** Checked by: **C. Marin**
Drilling Method: **3.25" ID HSA; boring backfilled upon completion**

WATER LEVEL DATA

While Drilling: **38.50 ft**
At Completion of Drilling: **48.50 ft**
Time After Drilling: **NA**
Depth to Water: **NA**

The stratification lines represent the approximate boundary between soil types; the actual transition may be gradual.

WANGENGINC 121030I.GPJ WANGENG.GDT 4/19/22

BORING LOG 45-0006-BSB-02 (CONTINUED)

Wang Engineering
wangeng@wangeng.com
1145 N Main Street
Lombard, IL 60148
Telephone: 630 953-9928
Fax: 630 953-9938

BORING LOG 45-0006-BSB-03

WEI Job No.: 121-03-01

Client: **Gannett Fleming**
Project: **US Route 20 From Randall Rd to Shales Parkway**
Location: **Elgin, Illinois**

Datum: NAVD 88
Elevation: 753.05 ft
North: 1949926.96 ft
East: 1001753.70 ft
Station: 1416+85.46
Offset: 36.91 RT

Elevation (ft)	SOIL AND ROCK DESCRIPTION	Depth (ft)	Sample No.	SPT Values (blw/6 in)	Qu (tsf)	Moisture Content (%)
752.92	2-inch thick ASPHALT --PAVEMENT--					
752.	9-inch thick CONCRETE --PAVEMENT--					
751.4	9-inch thick SANDY GRAVEL --BASE COURSE--					
	Stiff to hard, brown SILTY CLAY LOAM to SILTY CLAY, trace gravel; damp --FILL-- --RDR 2--	5	1	4 3 4	NA	20
			2	3 6 7	1.50 P	20
			3	2 2 1	1.00 P	19
	--1-inch thick, sand seam; damp--	10	4	3 4 5	3.00 P	13
			5	3 8 9	4.00 P	14
		15	6	4 7 8	3.25 P	12
			7	4 3 4	2.25 P	16
733.8	Dense, black and brown, fine to	20	8	5 22 12	2.50 P	14

Elevation (ft)	SOIL AND ROCK DESCRIPTION	Depth (ft)	Sample No.	SPT Values (blw/6 in)	Qu (tsf)	Moisture Content (%)
732.6	coarse SAND, trace gravel; damp --FILL-- --RDR 2--					
	Very stiff, brown SILTY CLAY, little gravel; damp to moist --RDR 2--		9	4 7 4	3.00 P	18
728.8	Loose, brown SILTY LOAM; moist	25	10	5 4 3	2.00 P	19
727.6	--RDR 2-- Loose to medium dense, brown, fine to coarse SAND to SANDY LOAM, trace gravel; damp --RDR 2--		11	4 3 5	NP	13
		30	12	6 9 16	NP	4
721.3	Medium dense to dense, brown, fine to coarse SAND, some gravel; damp to saturated --RDR 2-3--					
		35	13	19 23 24	NP	4
	--rig chatter; possible cobbles--					
		40	14	11 14 15	NP	10

GENERAL NOTES

Begin Drilling: **10-18-2021** Complete Drilling: **10-18-2021**
Drilling Contractor: **Wang Testing Services** Drill Rig: **20D50T [80%]**
Driller: **RH&JD** Logger: **E. Yim** Checked by: **C. Marin**
Drilling Method: **2.25" ID HSA; boring backfilled upon completion**

WATER LEVEL DATA

While Drilling: **38.50 ft**
At Completion of Drilling: **48.00 ft**
Time After Drilling: **24 hours**
Depth to Water: **40.50 ft**

The stratification lines represent the approximate boundary between soil types; the actual transition may be gradual.

WANGENGINC 121030.GPJ WANGENG.GDT 4/19/22

BORING LOG 45-0006-BSB-03

Wang Engineering
wangeng@wangeng.com
1145 N Main Street
Lombard, IL 60148
Telephone: 630 953-9928
Fax: 630 953-9938

BORING LOG 45-0006-BSB-03

WEI Job No.: 121-03-01

Client: **Gannett Fleming**
Project: **US Route 20 From Randall Rd to Shales Parkway**
Location: **Elgin, Illinois**

Datum: NAVD 88
Elevation: 753.05 ft
North: 1949926.96 ft
East: 1001753.70 ft
Station: 1416+85.46
Offset: 36.91 RT

Elevation (ft)	SOIL AND ROCK DESCRIPTION	Depth (ft)	Sample No.	SPT Values (blw/6 in)	Qu (tsf)	Moisture Content (%)
711.3	Very stiff to hard, gray SILTY CLAY LOAM, trace gravel; damp --RDR 2--					
		45	15	7 11 14	4.51 B	13
		50	16	7 11 15	3.77 B	13
		55	17	8 11 11	3.44 B	12
693.1		60	18	6 10 12	3.53 B	13
	Boring terminated at 60.00 ft					

GENERAL NOTES

Begin Drilling: **10-18-2021** Complete Drilling: **10-18-2021**
Drilling Contractor: **Wang Testing Services** Drill Rig: **20D50T [80%]**
Driller: **RH&JD** Logger: **E. Yim** Checked by: **C. Marin**
Drilling Method: **2.25" ID HSA; boring backfilled upon completion**

WATER LEVEL DATA

While Drilling: **38.50 ft**
At Completion of Drilling: **48.00 ft**
Time After Drilling: **24 hours**
Depth to Water: **40.50 ft**

The stratification lines represent the approximate boundary between soil types; the actual transition may be gradual.

WANGENGINC 121030.GPJ WANGENG.GDT 4/19/22

BORING LOG 45-0006-BSB-03 (CONTINUED)

Wang Engineering
wangeng@wangeng.com
1145 N Main Street
Lombard, IL 60148
Telephone: 630 953-9928
Fax: 630 953-9938

BORING LOG 45-0006-BSB-04

WEI Job No.: 121-03-01

Client: **Gannett Fleming**
Project: **US Route 20 From Randall Rd to Shales Parkway**
Location: **Elgin, Illinois**

Datum: NAVD 88
Elevation: 732.00 ft
North: 1949903.86 ft
East: 1001825.24 ft
Station: 1417+56.63
Offset: 61.12 RT

Elevation (ft)	SOIL AND ROCK DESCRIPTION	Depth (ft)	Sample Type / recovery	Sample No.	SPT Values (blw/6 in)	Qu (tsf)	Moisture Content (%)
	16-inch thick, black, medium to coarse SANDY LOAM --TOPSOIL--						
730.7	Loose, brown, fine to coarse SAND, little gravel; damp --RDR 2-- --FILL--			1	2 3 4	NP	12
728.8	Stiff, brown SILTY CLAY, trace gravel; moist --RDR 2--	5		2	3 3 4	1.56 B	25
726.5	Medium dense, brown SILT, trace gravel; saturated --RDR 2--			3	2 5 8	NP	24
723.3	Medium dense to dense, gray and brown SANDY GRAVEL to GRAVEL; damp to saturated --RDR 2-3-- --possible cobbles--	10		4	13 20 23	NP	3
				5	5 15 21	NP	5
	--possible cobbles--	15		6	7 10 16	NP	4
				7	9 11 10	NP	5
		20		8	5 11 15	NP	7

Elevation (ft)	SOIL AND ROCK DESCRIPTION	Depth (ft)	Sample Type / recovery	Sample No.	SPT Values (blw/6 in)	Qu (tsf)	Moisture Content (%)
	--after drilling borehole collapsed at 20 feet--			9	8 9 5	NP	6
709.0	Stiff to very stiff, brown SILTY CLAY LOAM, trace gravel; damp --RDR 2--	25		10	5 6 9	3.44 S	13
				11	5 8 10	2.71 B	14
		30		12	4 5 8	1.15 B	15
		35		13	5 8 12	3.03 B	14
		40		14	5 8 11	3.36 B	14

GENERAL NOTES

Begin Drilling: **11-23-2021** Complete Drilling: **11-23-2021**
Drilling Contractor: **Wang Testing Services** Drill Rig: **20D50T [80%]**
Driller: **RH&JD** Logger: **D. You** Checked by: **C. Marin**
Drilling Method: **3.25" ID HSA; boring backfilled upon completion**

WATER LEVEL DATA

While Drilling: **5.50 ft**
At Completion of Drilling: **NA**
Time After Drilling: **NA**
Depth to Water: **NA**

The stratification lines represent the approximate boundary between soil types; the actual transition may be gradual.

WANGENGINC 121030I.GPJ WANGENG.GDT 4/19/22

BORING LOG 45-0006-BSB-04

Wang Engineering
wangeng@wangeng.com
1145 N Main Street
Lombard, IL 60148
Telephone: 630 953-9928
Fax: 630 953-9938

BORING LOG 45-0006-BSB-04

WEI Job No.: 121-03-01

Client: **Gannett Fleming**
Project: **US Route 20 From Randall Rd to Shales Parkway**
Location: **Elgin, Illinois**

Datum: NAVD 88
Elevation: 732.00 ft
North: 1949903.86 ft
East: 1001825.24 ft
Station: 1417+56.63
Offset: 61.12 RT

Elevation (ft)	SOIL AND ROCK DESCRIPTION	Depth (ft)	Sample Type / recovery	Sample No.	SPT Values (blw/6 in)	Qu (tsf)	Moisture Content (%)
	--rig chatter; possible cobbles--						
669.0 / 668.8	COBBLES						
	Gravelly SILTY CLAY LOAM	45		15	5 7 10	2.87 B	14
		50		16	4 5 8	1.64 B	15
659.0	Very stiff, brown SILTY CLAY LOAM, trace gravel; damp	55		17	7 11 13	3.53 B	14
		60		18	6 10 12	3.44 B	14

Elevation (ft)	SOIL AND ROCK DESCRIPTION	Depth (ft)	Sample Type / recovery	Sample No.	SPT Values (blw/6 in)	Qu (tsf)	Moisture Content (%)
		65	CORE				
				19			
		70					
		75		20	5 8 10	2.30 B	14
		80		21	10 12 19	2.95 B	13

GENERAL NOTES

Begin Drilling: **11-23-2021** Complete Drilling: **11-23-2021**
Drilling Contractor: **Wang Testing Services** Drill Rig: **20D50T [80%]**
Driller: **RH&JD** Logger: **D. You** Checked by: **C. Marin**
Drilling Method: **3.25" ID HSA; boring backfilled upon completion**

WATER LEVEL DATA

While Drilling: **5.50 ft**
At Completion of Drilling: **NA**
Time After Drilling: **NA**
Depth to Water: **NA**

The stratification lines represent the approximate boundary between soil types; the actual transition may be gradual.

WANGENGINC 121030I.GPJ WANGENG.GDT 4/19/22

BORING LOG 45-0006-BSB-04 (CONTINUED)

Wang Engineering
wangeng@wangeng.com
1145 N Main Street
Lombard, IL 60148
Telephone: 630 953-9928
Fax: 630 953-9938

BORING LOG 45-0006-BSB-05

WEI Job No.: 121-03-01

Client: **Gannett Fleming**
Project: **US Route 20 From Randall Rd to Shales Parkway**
Location: **Elgin, Illinois**

Datum: NAVD 88
Elevation: 734.53 ft
North: 1949910.01 ft
East: 1001897.16 ft
Station: 1418+28.65
Offset: 56.10 RT

Elevation (ft)	SOIL AND ROCK DESCRIPTION	Depth (ft)	Sample Type / recovery	Sample No.	SPT Values (blw/6 in)	Qu (tsf)	Moisture Content (%)
	10-inch thick, black SILTY						
733.7	LOAM, trace gravel; damp --TOPSOIL--						
733.1	Stiff, brown SILTY CLAY LOAM, little gravel; moist --FILL--			1	2 5 4	1.00 P	13
731.5	Loose, brown, fine to coarse SAND, little gravel; damp --FILL--						
	Medium stiff, brown SILTY CLAY, trace to little gravel; moist --RDR 2-3-- --rig chatter--	5		2	2 2 3	0.57 B	22
727.0	Medium dense, brown SANDY GRAVEL to GRAVEL: damp to saturated --RDR 2-3--			3	5 11 14	0.50 P	25
		10		4	4 5 7	NP	8
				5	7 12 13	NP	5
		15		6	8 12 14	NP	4
				7	10 9 7	NP	6
		20		8	9 7 8	NP	6
714.0	Stiff to very stiff, brown SILTY CLAY LOAM, trace to little gravel; damp --RDR 2--			9	4 5 7	3.44 B	14
		25		10	5 7 9	3.12 B	15
				11	4 5 8	2.30 B	15
		30		12	4 6 9	3.03 B	14
		35		13	5 6 9	1.89 B	15
		40		14	7 11 12	2.87 B	13

GENERAL NOTES

Begin Drilling: **12-03-2021** Complete Drilling: **12-03-2021**
Drilling Contractor: **Wang Testing Services** Drill Rig: **20D50T [80%]**
Driller: **RH&AG** Logger: **D. You** Checked by: **C. Marin**
Drilling Method: **3.25" ID HSA; boring backfilled upon completion**

WATER LEVEL DATA

While Drilling: **17.50 ft**
At Completion of Drilling: **DRY**
Time After Drilling: **NA**
Depth to Water: **NA**

The stratification lines represent the approximate boundary between soil types; the actual transition may be gradual.

WANGENGINC 1210301.GPJ WANGENG.GDT 4/19/22

BORING LOG 45-0006-BSB-05

Wang Engineering
wangeng@wangeng.com
1145 N Main Street
Lombard, IL 60148
Telephone: 630 953-9928
Fax: 630 953-9938

BORING LOG 45-0006-BSB-05

WEI Job No.: 121-03-01

Client: **Gannett Fleming**
Project: **US Route 20 From Randall Rd to Shales Parkway**
Location: **Elgin, Illinois**

Datum: NAVD 88
Elevation: 734.53 ft
North: 1949910.01 ft
East: 1001897.16 ft
Station: 1418+28.65
Offset: 56.10 RT

Elevation (ft)	SOIL AND ROCK DESCRIPTION	Depth (ft)	Sample Type / recovery	Sample No.	SPT Values (blw/6 in)	Qu (tsf)	Moisture Content (%)
	--L_L(%)=27, P_L(%)=11-- --%Gravel=3.1-- --%Sand=24.6-- --%Silt=48.6-- --%Clay=23.6-- --A-6 (8)--	45		15	5 7 9	1.80 B	15
		50		16	5 8 10	2.79 B	14
680.0	Brown, fine to medium SAND, trace gravel; saturated --RDR 2--	55		17	7 12 20	1.31 B	14
677.8	Very stiff, brown SILTY CLAY LOAM, trace gravel; damp --RDR 2--						
674.5	Boring terminated at 60.00 ft	60		18	6 9 15	2.30 B	14

GENERAL NOTES

Begin Drilling: **12-03-2021** Complete Drilling: **12-03-2021**
Drilling Contractor: **Wang Testing Services** Drill Rig: **20D50T [80%]**
Driller: **RH&AG** Logger: **D. You** Checked by: **C. Marin**
Drilling Method: **3.25" ID HSA; boring backfilled upon completion**

WATER LEVEL DATA

While Drilling: **17.50 ft**
At Completion of Drilling: **DRY**
Time After Drilling: **NA**
Depth to Water: **NA**

The stratification lines represent the approximate boundary between soil types; the actual transition may be gradual.

WANGENGINC 1210301.GPJ WANGENG.GDT 4/19/22

BORING LOG 45-0006-BSB-05 (CONTINUED)

Wang Engineering
wangeng@wangeng.com
1145 N Main Street
Lombard, IL 60148
Telephone: 630 953-9928
Fax: 630 953-9938

BORING LOG 45-0006-BSB-06

WEI Job No.: 121-03-01

Client: **Gannett Fleming**
Project: **US Route 20 From Randall Rd to Shales Parkway**
Location: **Elgin, Illinois**

Datum: NAVD 88
Elevation: 752.02 ft
North: 1949936.09 ft
East: 1001962.14 ft
Station: 1418+94.02
Offset: 31.04 RT

Elevation (ft)	SOIL AND ROCK DESCRIPTION	Depth (ft)	Sample No.	SPT Values (blw/6 in)	Qu (tsf)	Moisture Content (%)
751.83	3-inch thick ASPHALT --PAVEMENT--					
751.0	9.5-inch thick CONCRETE --PAVEMENT--					
749.5	2.5-inch thick SANDY GRAVEL --BASE COURSE--					
	Stiff to hard, brown SILTY CLAY to SILTY CLAY LOAM, trace to some gravel; damp to moist --FILL-- --RDR 2-3--		1	5 6 5	2.00 P	
		5	2	2 2 2	NA	23
			3	2 3 6	1.56 B	13
		10	4	2 2 3	1.50 P	13
			5	4 4 2	1.23 B	8
		15	6	3 5 5	2.50 P	13
			7	4 5 10	1.64 B	15
		20	8	5 7 10	5.00 B	14
730.8	Stiff, brown SILTY CLAY, trace gravel; moist --Buried TOPSOIL-- --RDR 2--		9	4 3 2	1.50 P	26
729.0	Very stiff, brown SILTY CLAY, little gravel; damp --RDR 2-3-- --rig chatter; possible cobbles--	25	10	4 13 50/3"	2.00 P	23
726.5	Medium dense to dense, brown, fine to coarse SAND, trace to some gravel; damp --RDR 2-3-- --rig chatter; possible cobbles--		11	6 10 15	NP	4
		30	12	14 18 19	NP	4
		35	13	14 17 17	NP	3
	--heaving sand in auger--					
715.3	Medium dense to dense, brown SANDY GRAVEL; saturated --RDR 2--	40	14	10 17 14	NP	8

GENERAL NOTES

Begin Drilling: **10-19-2021** Complete Drilling: **10-19-2021**
Drilling Contractor: **Wang Testing Services** Drill Rig: **20D50T [80%]**
Driller: **RH&JD** Logger: **E. Yim** Checked by: **C. Marin**
Drilling Method: **3.25" ID HSA; boring backfilled upon completion**

WATER LEVEL DATA

While Drilling: **38.00 ft**
At Completion of Drilling: **55.00 ft**
Time After Drilling: **NA**
Depth to Water: **NA**

The stratification lines represent the approximate boundary between soil types; the actual transition may be gradual.

WANGENGINC 121030I.GPJ WANGENG.GDT 4/19/22

BORING LOG 45-0006-BSB-06

Wang Engineering
wangeng@wangeng.com
1145 N Main Street
Lombard, IL 60148
Telephone: 630 953-9928
Fax: 630 953-9938

BORING LOG 45-0006-BSB-06

WEI Job No.: 121-03-01

Client: **Gannett Fleming**
Project: **US Route 20 From Randall Rd to Shales Parkway**
Location: **Elgin, Illinois**

Datum: NAVD 88
Elevation: 752.02 ft
North: 1949936.09 ft
East: 1001962.14 ft
Station: 1418+94.02
Offset: 31.04 RT

Elevation (ft)	SOIL AND ROCK DESCRIPTION	Depth (ft)	Sample No.	SPT Values (blw/6 in)	Qu (tsf)	Moisture Content (%)
		45	15	7 12 13	NP	6
705.3	Very stiff, brown SILTY CLAY LOAM, trace gravel; damp --RDR 2--					
		50	16	5 8 9	2.21 B	14
		55	17	10 12 16	3.12 B	13
692.0	Boring terminated at 60.00 ft.	60	18	7 9 13	3.53 B	14

GENERAL NOTES

Begin Drilling: **10-19-2021** Complete Drilling: **10-19-2021**
Drilling Contractor: **Wang Testing Services** Drill Rig: **20D50T [80%]**
Driller: **RH&JD** Logger: **E. Yim** Checked by: **C. Marin**
Drilling Method: **3.25" ID HSA; boring backfilled upon completion**

WATER LEVEL DATA

While Drilling: **38.00 ft**
At Completion of Drilling: **55.00 ft**
Time After Drilling: **NA**
Depth to Water: **NA**

The stratification lines represent the approximate boundary between soil types; the actual transition may be gradual.

WANGENGINC 121030I.GPJ WANGENG.GDT 4/19/22

BORING LOG 45-0006-BSB-06 (CONTINUED)

Benchmark: Cut "□" on top of Pier 2 crashwall located 8-ft north of SW corner of Pier 2, east side of Liberty St. Elev. 734.02. (BM #506)

Existing Structure: S.N. 045-0007 carrying US Route 20 over Liberty Street (IL 25) was originally constructed in 1959 as F.A. Route 6, Section 8R-HB-6. In 1986 bridge was widened, concrete overlay placed, and joints reconstructed, and the substructure was rehabilitated and widened. In 1998, steel beams were repaired and pin and link plate was replaced. The structure is a three-span (37'-6", 69'-0", 37'-6") non-composite steel beam bridge supported on reinforced concrete stub abutments founded on concrete piles and concrete multiple column piers founded on spread footings. The overall structure is 147'-6" back to back of abutments with no skew. The eastbound clear width varies from 34'-1½" to 37'-2¾" and the westbound clear width is 34'-7½" between curbs; the overall out-to-out width of the bridge varies from 74'-8" to 77'-9¼".

Staged construction will be utilized maintaining one traffic lane in each direction utilizing a cross over.

No salvage.

SCOPE OF WORK

1. Remove existing superstructure and bearings, and portions of existing abutment backwall and wingwalls.
2. Convert existing abutments to semi-integral abutments.
3. At E. and W. Abutments, erect new bearings with steel extensions (Beam lines 3-11), and construct new concrete extensions for Beam lines 1, 2, 12, 13 & 14.
4. Remove and replace pier caps, and erect new bearings.
5. Complete concrete repairs on piers and abutments.
6. Erect new rolled beams and construct new concrete deck, parapet and approach slabs.
7. Erect new structure-mounted noise abatement walls.

DESIGN SPECIFICATIONS

2020 AASHTO LRFD Bridge Design Specifications, 9th Edition
2006 Seismic Retrofitting Manual for Highway Structures: Part 1 - Bridges (FHWA-HRT-06-032)

DESIGN STRESSES

FIELD UNITS (New Const.)
f'c = 3,500 psi (Substructure)
f'c = 4,000 psi (Superstructure)
fy = 60,000 psi (Reinforcement)
fy = 50,000 psi (Primary Members, AASHTO M270 Gr. 50)
fy = 36,000 psi (Secondary Members, AASHTO M270 Gr. 36)

FIELD UNITS (Exist. Const.)
fc = 1,400 psi (Substructure)

FIELD UNITS (NAW)
Fy = 50,000 psi (Structural Steel (Grade 50))

PRECAST UNITS
f'c = 4,500 psi (Precast Concrete)
fy = 60,000 psi (Reinforcement)
fy = 65,000 psi (Welded Wire Reinforcement)

LOADING HL-93

Allow 50#/sq. ft. for future wearing surface.

DESIGN LOADS (NAW)

Struct.-Mount. NAW unfactored dead load: 65 psf
Strength III or V Wind: 35 psf
Service I Wind: 15 psf

SEISMIC DATA

Seismic Retrofit Category (SRC) = A
Design Spectral Acceleration at 1.0 sec. (SD1) = 0.085g
Design Spectral Acceleration at 0.2 (SDS) = 0.151g
Soil Site Class = D
Performance Level = PL1

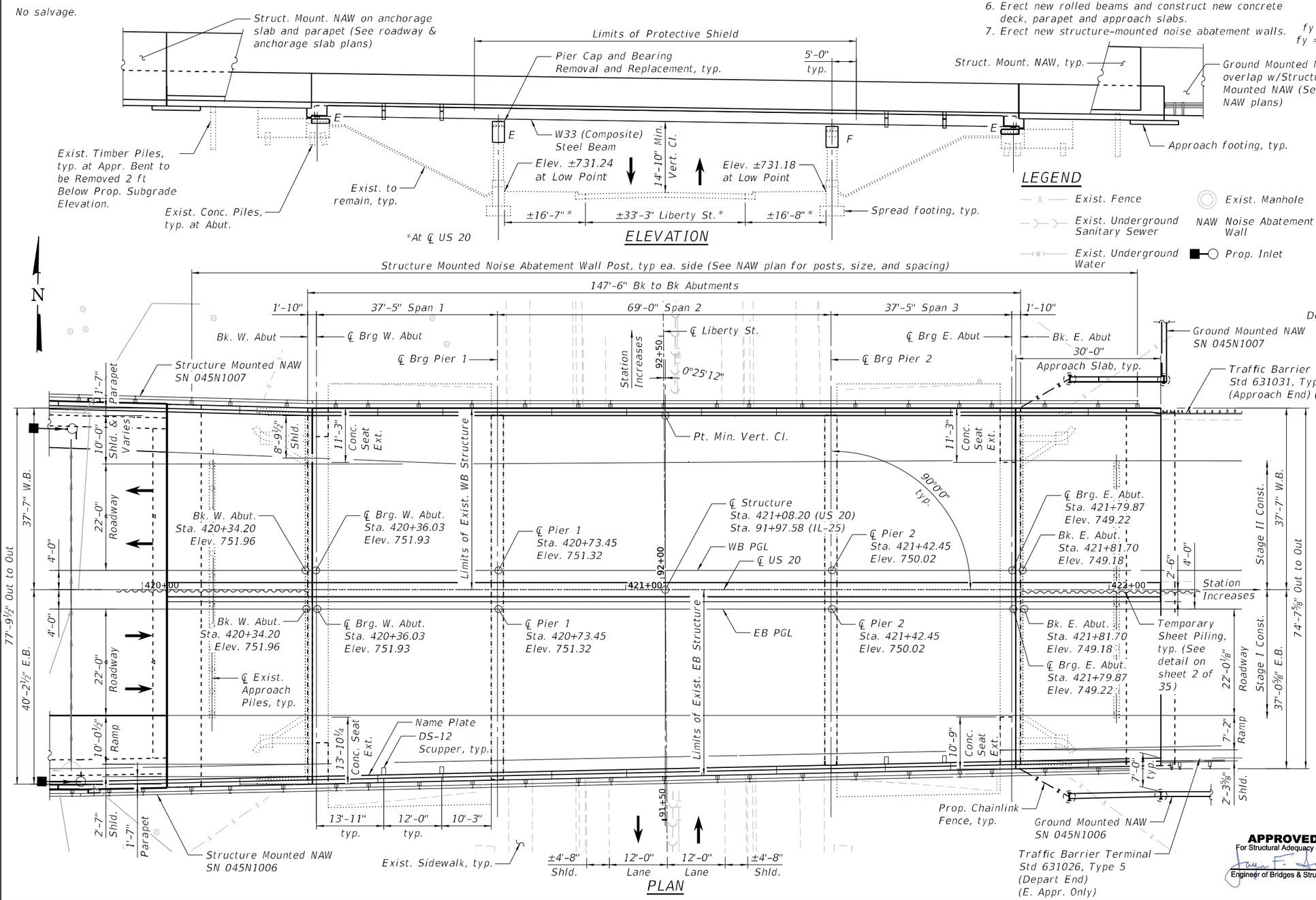

LEGEND

- Exist. Fence
- Exist. Underground Sanitary Sewer
- Exist. Underground Water
- Exist. Manhole
- NAW Noise Abatement Wall
- Prop. Inlet

STATE OF ILLINOIS
DANIEL S. FILICE
081.007107
CHICAGO, ILLINOIS
LICENSED STRUCTURAL ENGINEER

SIGNATURE:
DATE: March 20, 2024
EXPIRES: November 30, 2024
SHEETS:

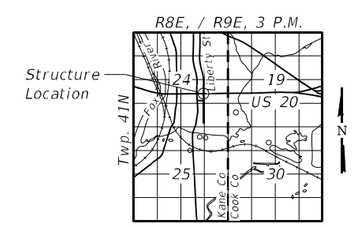

LOCATION SKETCH

GENERAL PLAN & ELEVATION
US ROUTE 20 OVER LIBERTY ST
F.A.P. RTE. 345 - SEC 345-23-BR
KANE COUNTY
STATION 421+08.20
STRUCTURE NO. 045-0007

APPROVED
For Structural Adequacy Only
Engineer of Bridges & Structures

GANNETT FLEMING

USER NAME = mzelisko	DESIGNED - JGC	REVISED -	
	CHECKED - DF	REVISED -	
PLOT SCALE =	DRAWN - LAM	REVISED -	
PLOT DATE = 5/8/2024	CHECKED - JJH	REVISED -	

STATE OF ILLINOIS
DEPARTMENT OF TRANSPORTATION

SHEET 1 OF 35 SHEETS

F.A.P. RTE.	SECTION	COUNTY	TOTAL SHEETS	SHEET NO.
345	FAP 345-23-BR	KANE	379	174

CONTRACT NO. 62U83
ILLINOIS FED. AID PROJECT

MODEL: Default
FILE NAME: pw:\\fgfnet-pw.bentley.com:gfnet-pw-01\Documents\Projects\68096\Project Working\A_CADD\62U83-Contract1\Sheets\045-0007\0450007-62U83-001-GPE.dgn
5/8/2024 11:10:11 PM

GENERAL NOTES

Fasteners shall be ASTM F3125 Grade A325 Type 1, mechanically galvanized bolts in painted areas. Bolts ⅞-in. Ø, holes 15/16-in. Ø, unless otherwise noted.

Calculated weight of Structural Steel = 262,980 pounds (M270 Grade 50)
36,450 pounds (M270 Grade 36)

No field welding is permitted except as specified in the contract documents.

Reinforcement bars designated (E) shall be epoxy coated.

Slipforming the outside parapets is not allowed. Slipforming the median barrier is allowed.

Bearing seat surfaces shall be constructed or adjusted to the designated elevations within a tolerance of ⅛ inch (0.01 ft.). Adjustment shall be made either by grinding the surface or by shimming the bearings.

Plan dimensions and details relative to existing structure have been taken from existing plans are subject to nominal construction variations. The Contractor shall field verify existing dimensions and details affecting new construction and make necessary approved adjustments prior to construction or ordering of materials. Such variations shall not be cause for additional compensation for a change in scope of the work, however, the Contractor will be paid for the quantity actually furnished at the unit price bid for the work.

The existing structural steel coating contains lead. Contractor shall take appropriate precautions to address the presence of lead on this project.

The Organic Zinc Rich Primer / Epoxy / Urethane Paint System shall be used for painting of new structural steel except where otherwise noted. The entire system shall be shop applied, with the exception of the exterior surface and the bottom of the bottom flange of fascia beams, masked off connection surfaces, and field installed fasteners shall all be touched up and finish coated in the field. The color of the final finish coat for all interior steel surfaces shall be Gray, Munsell No. 5B 7/1. The color of the final finish coat for the exterior and bottom flange of the fascia beams shall be Reddish Brown, Munsell No. 2.5YR 3/4.

INDEX OF SHEETS

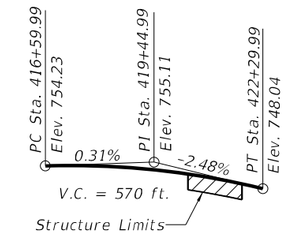

PROFILE GRADE - US 20

4-ft offset (Eastbound & Westbound)

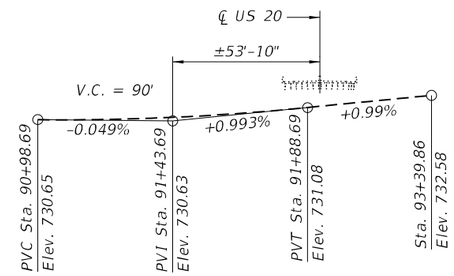

PROFILE GRADE

Along ℄ Exist. Liberty St.

TOTAL BILL OF MATERIAL

ITEM	UNIT	SUPER	SUB	TOTAL
Removal of Existing Superstructures No. 1	Each	1	-	1
Concrete Removal	Cu Yd	-	73.9	73.9
Protective Shield	Sq Yd	670	-	670
Structure Excavation	Cu Yd	-	189.0	189.0
Concrete Structures	Cu Yd	-	123.9	123.9
Concrete Superstructure	Cu Yd	496.4	-	496.4
Bridge Deck Grooving	Sq Yd	1,555	-	1,555
Protective Coat	Sq Yd	2,167	-	2,167
Concrete Superstructure (Approach Slab)	Cu Yd	213.4	-	213.4
Furnishing and Erecting Structural Steel	L Sum	0.33	-	0.33
Stud Shear Connectors	Each	11,130	-	11,130
Reinforcement Bars, Epoxy Coated	Pound	237,290	14,490	251,780
Bar Splicers	Each	738	40	778
Name Plates	Each	1	-	1
Elastomeric Bearing Assembly, Type I	Each	42	-	42
Anchor Bolts, 3/4"	Each	56	-	56
Anchor Bolts, 1"	Each	56	-	56
Epoxy Crack Injection	Foot	-	13	13
Temporary Sheet Piling	Sq Ft	-	527	527
Granular Backfill for Structures	Cu Yd	-	262.1	262.1
Geocomposite Wall Drain	Sq Yd	-	127	127
Pipe Underdrains for Structures 4"	Foot	-	215	215
Slope Wall Crack Sealing	Foot	-	128	128
Noise Abatement Wall Anchor Rod Assembly	Each	42	-	42
Bar Terminators	Each	517	-	517
Structural Repair of Concrete (Depth equal to or less than 5 inches)	Sq Ft	-	5	5
Structural Repair of Concrete (Depth greater than 5 inches)	Sq Ft	-	8	8
Deck Slab Repair (Partial)	Sq Yd	20	-	20
Drainage Scuppers, DS-12	Each	4	-	4

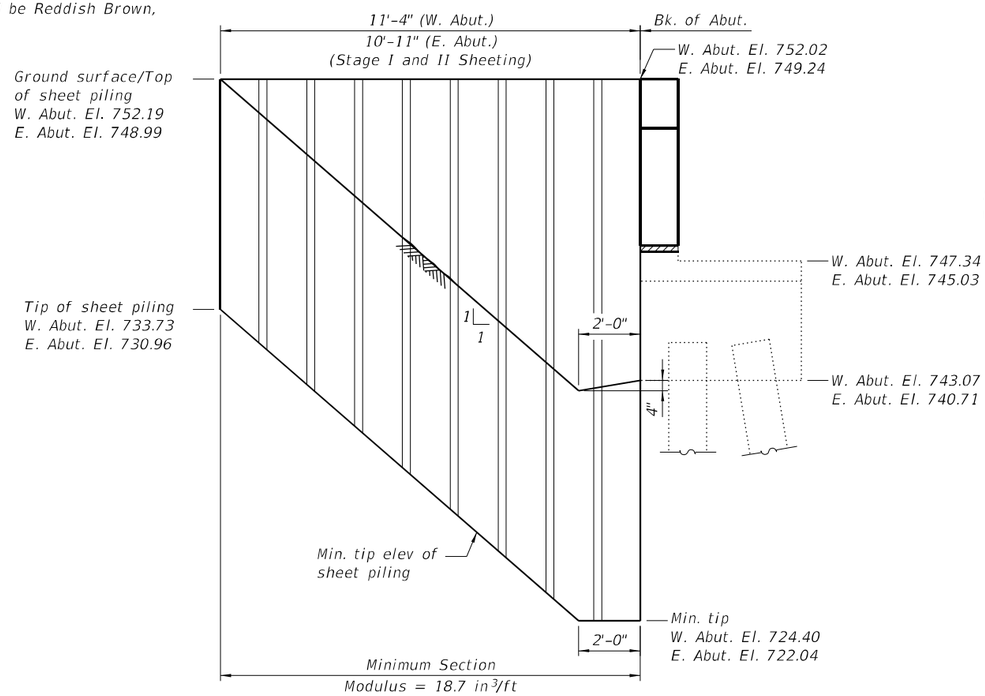

TEMPORARY SHEET PILING

(Along ℄ US 20 at each abutment)

If the Contractor chooses to alter the temporary cantilevered sheet piling design requirements shown on the plans, a design submittal including plan details and calculations will be required for review and acceptance by the Engineer.

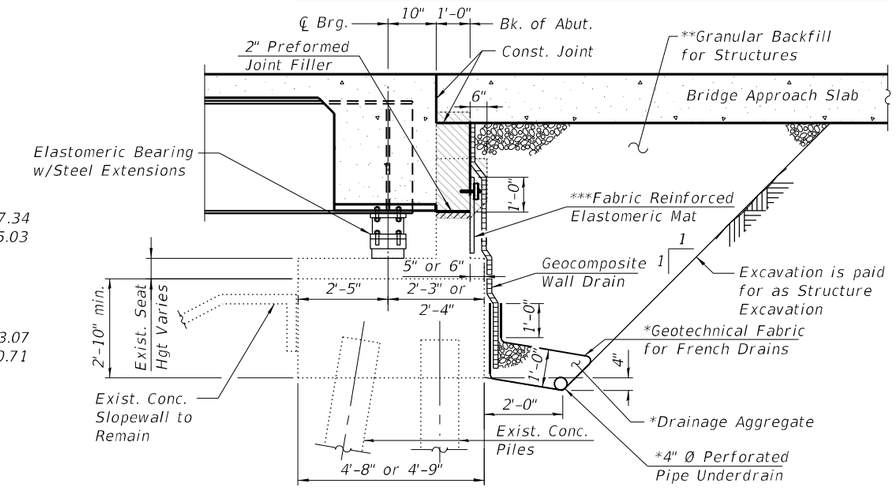

SECTION THRU SEMI-INTEGRAL ABUTMENT

(Abut. with steel extension shown, Abut. with conc. extension sim.)

* Included in the cost of Pipe Underdrains for Structures, 4"

** Granular Backfill for Structures shall follow Std. Spec. 586. Granular backfill behind the abutments shall be compacted according to Article 205.06 of the Standard Specifications.

*** Cost included with Concrete Superstructure. Fabric mat shall be 26" wide and attached full width and vertically at edges to the abutment cap with a ⅜" x 5" steel plate and ½" Ø bolts with nuts and washers at 12" centers according to Section 1028 of the Std. Specs. Further details of the ½" expansion bolts and galvanized plate may be found on sheet 18 of 35.

Note:

All drainage system components shall extend from inside face to inside face of existing wingwalls. Place pipe drain under existing wingwall footing and extend through until intersecting with the side slopes. The pipes shall drain into concrete headwalls. (See Article 601.05 of the Standard Specifications and Highway Standard 601101).

STATION 421+08.20
RE-BUILT 20__ BY
STATE OF ILLINOIS
F.A.P. RT. 345 SEC. 345-23-BR
LOADING HL-93
STRUCTURE NO. 045-0007

NAME PLATE

See Std. 515001

Existing Name Plate shall be cleaned and relocated next to new Name Plate. Cost included with Name Plates.

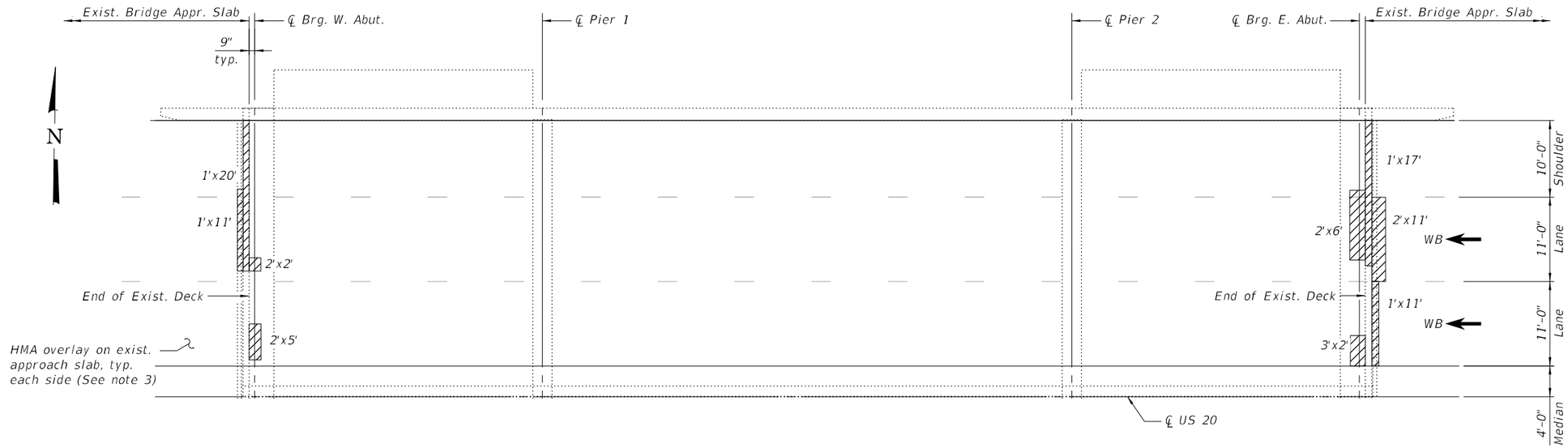

PARTIAL PLAN (WB)

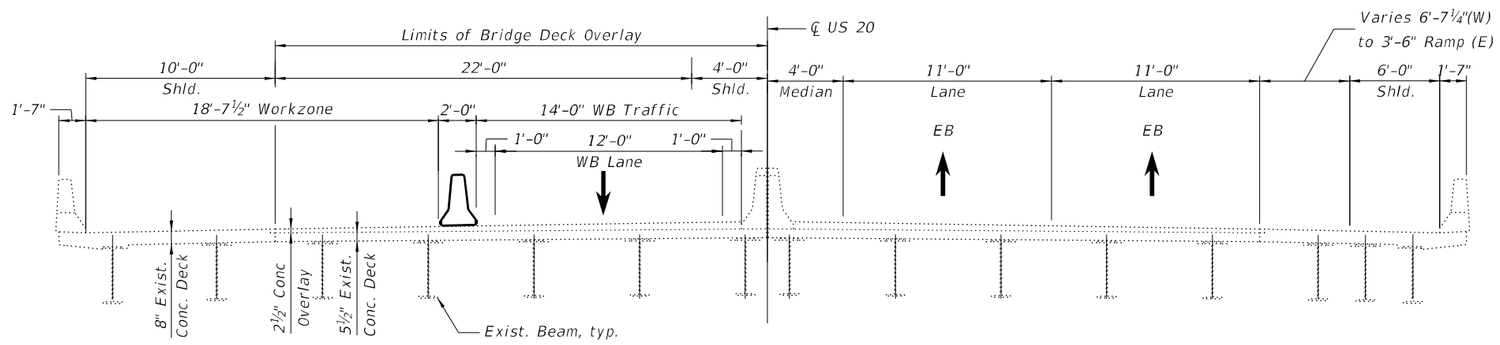

PRE-STAGE 1A CROSS SECTION

(Looking East)

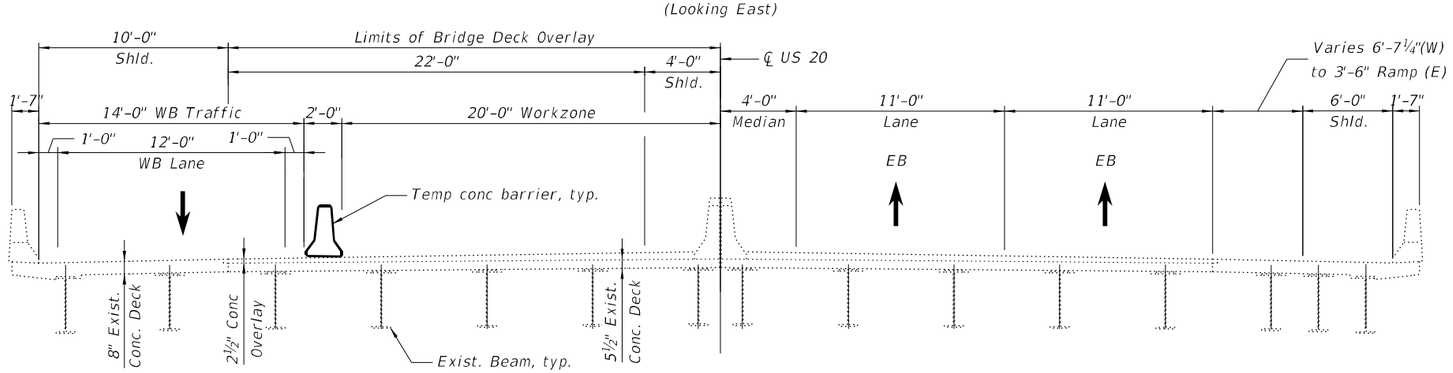

PRE-STAGE 1B CROSS SECTION

(Looking East)

LEGEND

Deck Slab Repair (Partial)

NOTES

1. See MOT plans for pre-stage traffic configuration during deck patching operations.
2. Area of proposed deck repairs are estimated based on a visual inspection. Actual type, location, and dimension of deck repairs are to be determined by the Engineer during construction. An additional quantity of 7 sq. yd. is included to account for repair growth and shall be used as directed by the Engineer.
3. HMA removal required for repairs on the approach slab or concrete overlay removal for deck slab repair will not be measured for payment separately, but shall be included in the cost of Deck Slab Repair (Partial).

BILL OF MATERIAL

ITEM	UNIT	QUANTITY
Deck Slab Repair (Partial)	Sq Yd	20

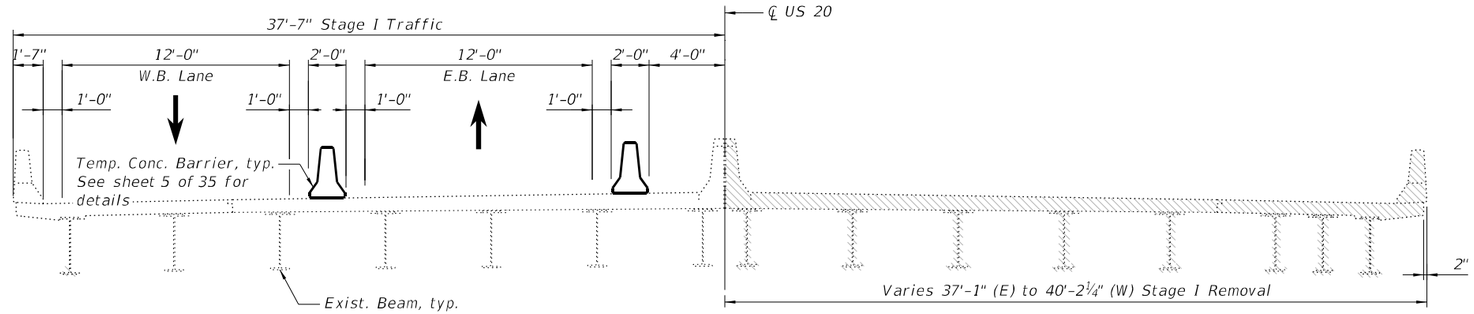

STAGE I REMOVAL

(Looking East)

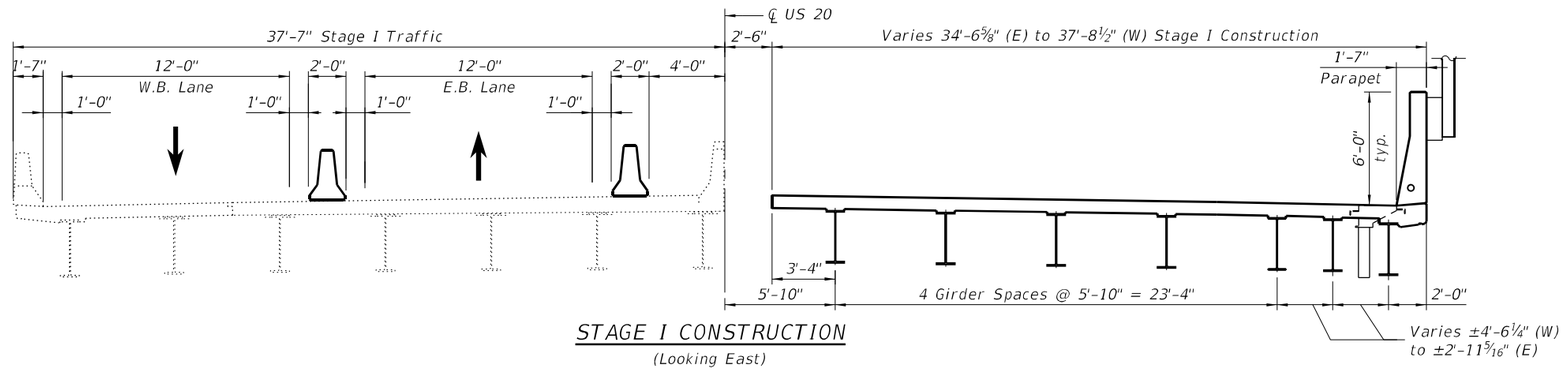

STAGE I CONSTRUCTION

(Looking East)

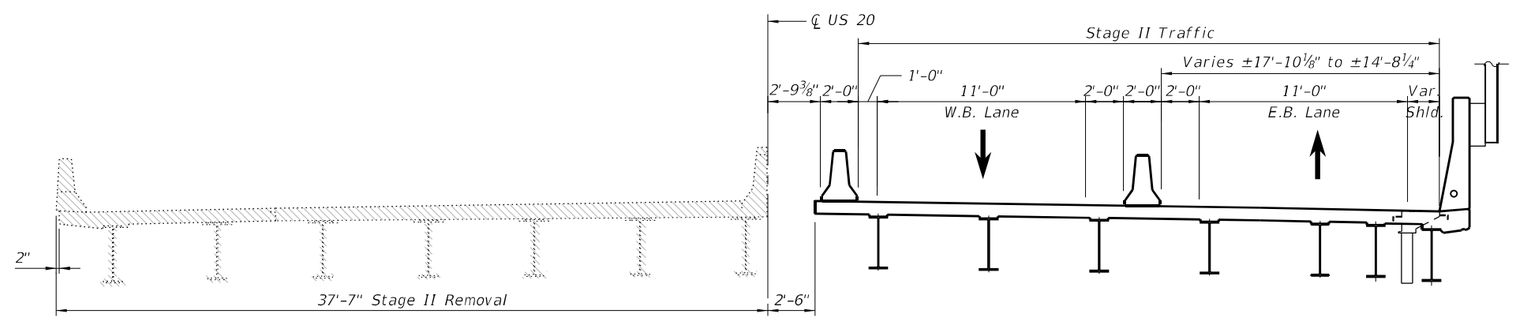

STAGE II REMOVAL

(Looking East)

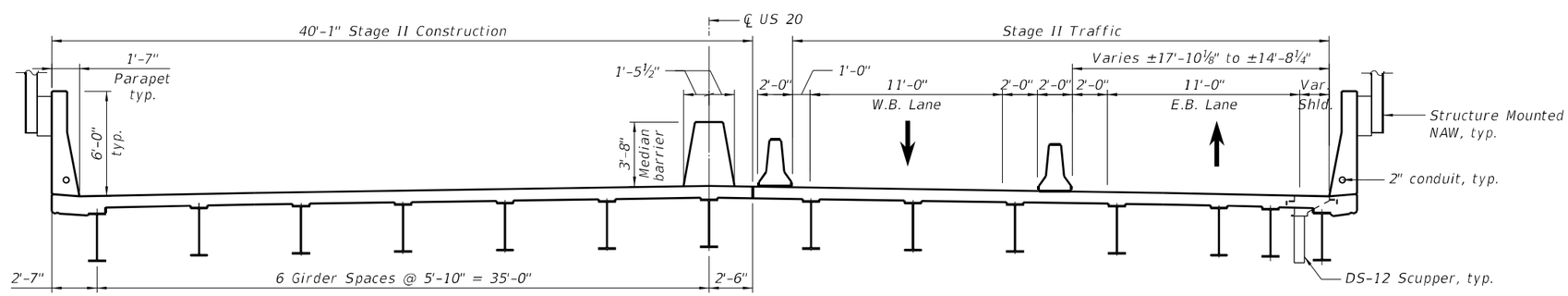

STAGE II CONSTRUCTION

(Looking East)

LEGEND

Removal of Existing Superstructures, No. 1

Note:
For quantity of Temporary Concrete Barrier, see Roadway Plans.

MODEL: Default
FILE NAME: pw://gfnet-pw.bentley.com:gfnet-pw-01/Documents/Projects/68096/Project Working/A_CADD/62U83-Contract1/Sheets/045-0007/0450007-62U83-004-CS2.dgn

GANNETT FLEMING

USER NAME = jstarzyk	DESIGNED - JGC	REVISED -	
	CHECKED - DF	REVISED -	
PLOT SCALE =	DRAWN - LAM	REVISED -	
PLOT DATE = 3/20/2024	CHECKED - MZ	REVISED -	

STATE OF ILLINOIS
DEPARTMENT OF TRANSPORTATION

CONSTRUCTION STAGING
STRUCTURE NO. 045-0007

SHEET 4 OF 35 SHEETS

F.A.P. RTE.	SECTION	COUNTY	TOTAL SHEETS	SHEET NO.
345	FAP 345-23-BR	KANE	379	177

CONTRACT NO. 62U83

ILLINOIS | FED. AID PROJECT

3/20/2024 4:39:02 PM

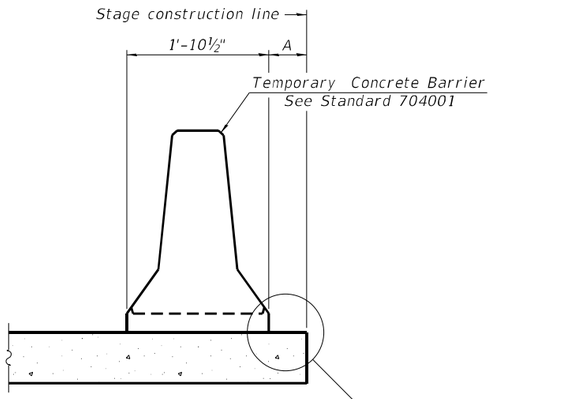

When "A" is 3'-1" or less, the temporary concrete barrier shall be restrained to the new slab according to Detail I, II or III. No restraint is required when "A" is greater than 3'-1".

NEW SLAB OR NEW DECK BEAM

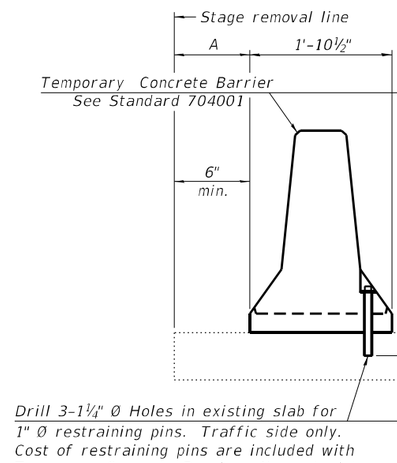

Drill 3-1¼" Ø Holes in existing slab for 1" Ø restraining pins. Traffic side only. Cost of restraining pins are included with Temporary Concrete Barrier. No restraint is required when "A" is greater than 3'-1".

EXISTING SLAB

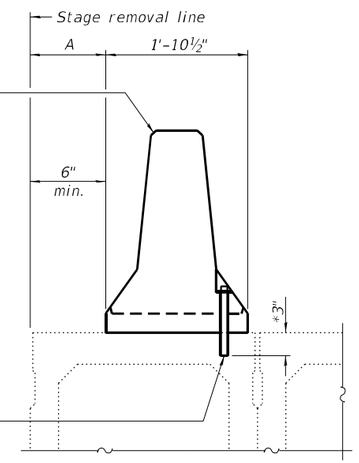

* When hot-mix asphalt wearing surface is present, embedment shall be 3" plus the wearing surface depth.

EXISTING DECK BEAM

SECTIONS THRU SLAB OR DECK BEAM

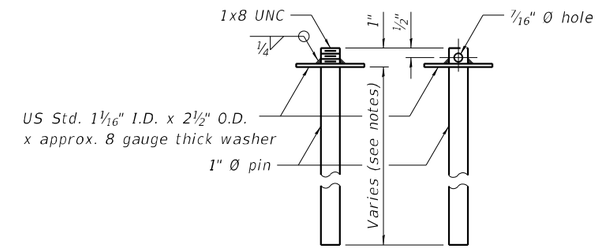

RESTRAINING PIN

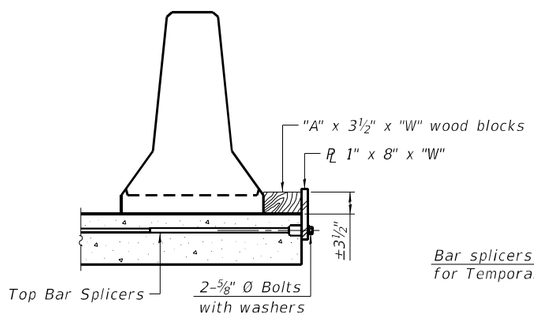

DETAIL I

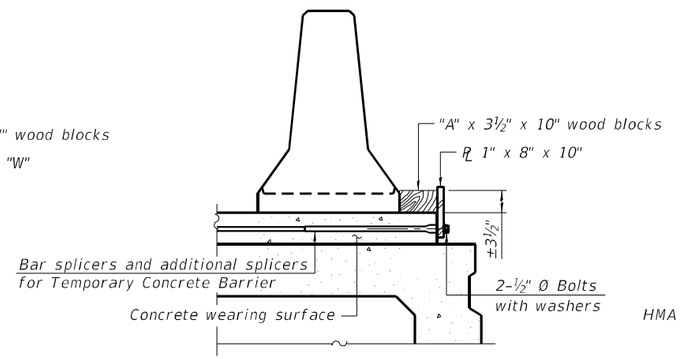

DETAIL II

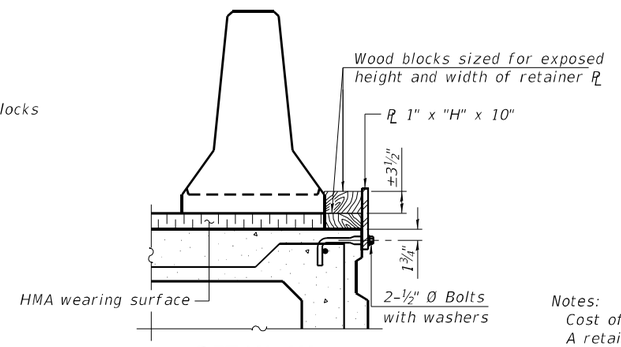

DETAIL III

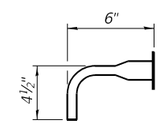

BAR SPLICER FOR #4 BAR - DETAIL III

Notes:

Cost of retainer assembly is included with Temporary Concrete Barrier.

A retainer assembly shall be located at the approximate ℄ of each temporary concrete barrier.

The retainer plate shall not be removed until the concrete on the adjacent stage is ready to be poured. For Detail III applications the retainer plate shall not be removed until just prior to placing the adjacent beam.

When the 'A' dimension is less than 1½", the wood block shall be omitted and the barrier shall be placed in direct contact with the steel retainer plate. For deck beam applications the minimum required 'A' distance is 6" to accommodate the shear key clamping device.

Detail I - Installation for a new bridge deck or bridge slab.

Detail II - Installation for a new deck beam with an initial concrete wearing surface. Additional bar splicers shall be provided at 6'-0" centers and paired with the bar splicers of the concrete wearing surface reinforcement to accommodate the installation of the retainer assemblies. The cost of the additional bar splicers is included with the concrete wearing surface.

Detail III - Installation for a new deck beam with no initial wearing surface or with an initial hot-mix asphalt (HMA) wearing surface present. The deck beam directly beneath the temporary concrete barrier shall be fabricated with bar splicer inserts in the side of the beam, as detailed, to accommodate the installation of the retainer assemblies. A pair of bar splicers, 6" apart, shall be placed at 6'-0" centers along the length of the beam. The cost of the bar splicers is included with the deck beam.

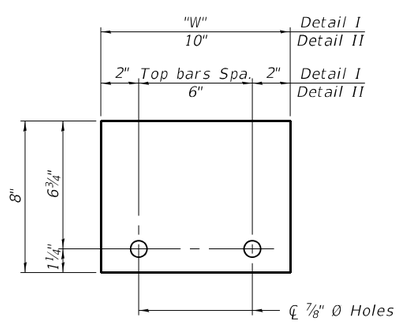

STEEL RETAINER PL 1" x 8" x "W"

(Detail I and II)

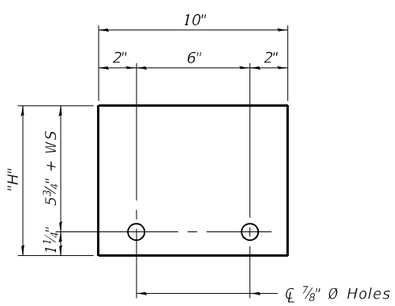

STEEL RETAINER PL 1" x "H" x 10"

(Detail III)

RAILING CRITERIA

NCHRP 350 Test Level	3
Railing Weight (plf)	440

R-27

10-12-2021

MODEL: Default
FILE NAME: pw://gfnet-pw.bentley.com:gfnet-pw01/Documents/Projects/68096/Project Working/A_CADD/62U83-Contract1/Sheets/045-0007/0450007-62U83-005-TCB.dgn

3/20/2024 4:39:09 PM

GANNETT FLEMING

USER NAME = jstarzyk	DESIGNED - SS	REVISED -	
	CHECKED - MZ	REVISED -	
PLOT SCALE =	DRAWN - LAM	REVISED -	
PLOT DATE = 3/20/2024	CHECKED - MZ	REVISED -	

STATE OF ILLINOIS
DEPARTMENT OF TRANSPORTATION

TEMPORARY CONCRETE BARRIER
STRUCTURE NO. 045-0007

SHEET 5 OF 35 SHEETS

F.A.P. RTE.	SECTION	COUNTY	TOTAL SHEETS	SHEET NO.
345	FAP 345-23-BR	KANE	379	178

CONTRACT NO. 62U83

ILLINOIS FED. AID PROJECT

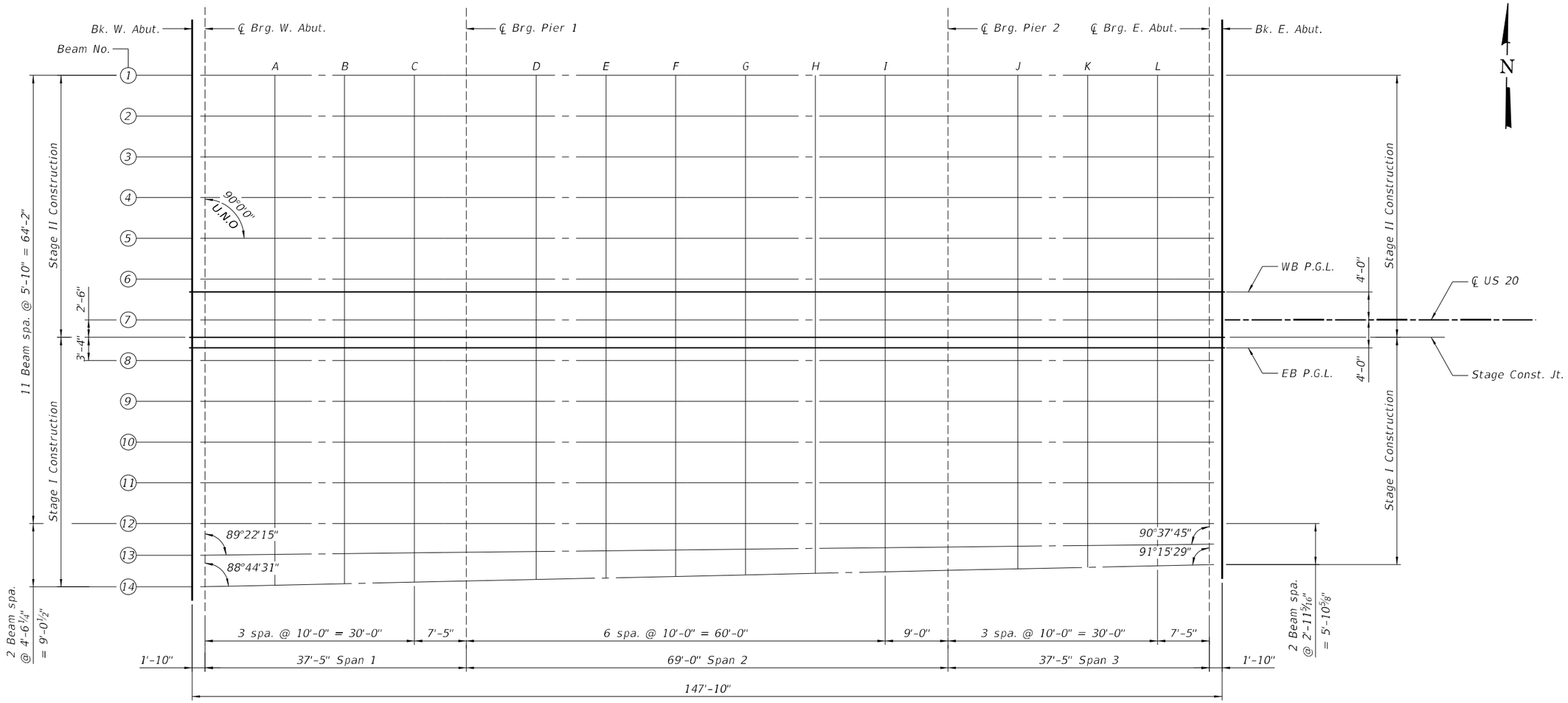

PLAN

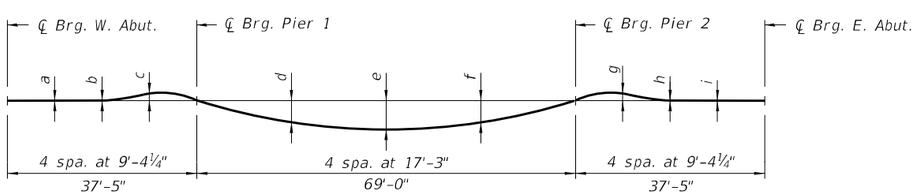

DEAD LOAD DEFLECTION DIAGRAM

(Includes weight of concrete only)

Note:
The above deflections are not to be used in the field if the engineer is working from the grade elevations adjusted for dead load deflections as shown on sheets 7 thru 9 of 35.

Beam No.	a	b	c	d	e	f	g	h	i
1, 2, 3 & 12	0"	0"	-⅛"	⅝"	1"	⅝"	-⅛"	0"	0"
4, 5, 9, 10 & 11	0"	0"	0"	½"	¾"	½"	0"	0"	0"
6, 7 & 8	0"	0"	0"	½"	⅞"	½"	0"	0"	0"
13 & 14	0"	0"	-⅛"	½"	⅞"	½"	-⅛"	0"	0"

DEAD LOAD DEFLECTION TABLE

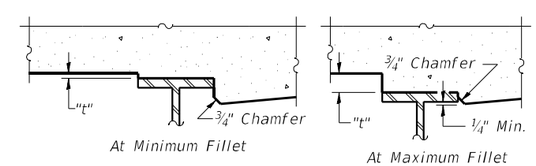

To determine "t": After all structural steel has been erected, elevations of the top flanges of the beams shall be taken at intervals shown above. These elevations subtracted from the "Theoretical Grade Elevations Adjusted for Dead Load Deflection" shown on sheets 7 thru 9 of 35, minus slab thickness, equals the fillet heights "t" above top flange of beams.

FILLET HEIGHTS

MODEL: Default
FILE NAME: pw://gfnet-pw.bentley.com:gfnet-pw-01/Documents/Projects/68096/Project Working/A_CADD/62U83-Contract1/Streets/045-0007/045000762U83-006-TOSL.dgn

GANNETT FLEMING

USER NAME = jstarzyk	DESIGNED - SS	REVISED -	
	CHECKED - MZ	REVISED -	
PLOT SCALE =	DRAWN - LAM	REVISED -	
PLOT DATE = 3/20/2024	CHECKED - MZ	REVISED -	

STATE OF ILLINOIS
DEPARTMENT OF TRANSPORTATION

TOP OF SLAB ELEVATIONS LAYOUT
STRUCTURE NO. 045-0007

SHEET 6 OF 35 SHEETS

F.A.P. RTE.	SECTION	COUNTY	TOTAL SHEETS	SHEET NO.
345	FAP 345-23-BR	KANE	379	179

CONTRACT NO. 62U83

ILLINOIS | FED. AID PROJECT

3/20/2024 4:39:14 PM

BEAM 1

Location	Station	Offset	Theoretical Grade Elevations	Theoretical Grade Elevations Adjusted For Dead Load Deflection
Bk. W. Abut.	420+34.20	-35.00	751.45	751.45
℄ Brg. W. Abut.	420+36.03	-35.00	751.42	751.42
A	420+46.03	-35.00	751.27	751.27
B	420+56.03	-35.00	751.10	751.10
C	420+66.03	-35.00	750.94	750.93
℄ Brg. Pier 1	420+73.45	-35.00	750.81	750.81
D	420+83.45	-35.00	750.64	750.66
E	420+93.45	-35.00	750.46	750.51
F	421+03.45	-35.00	750.28	750.34
G	421+13.45	-35.00	750.09	750.15
H	421+23.45	-35.00	749.90	749.94
I	421+33.45	-35.00	749.70	749.72
℄ Brg. Pier 2	421+42.45	-35.00	749.51	749.51
J	421+52.45	-35.00	749.31	749.30
K	421+62.45	-35.00	749.09	749.09
L	421+72.45	-35.00	748.88	748.88
℄ Brg. E. Abut.	421+79.87	-35.00	748.71	748.71
Bk. E. Abut.	421+81.70	-35.00	748.67	748.67

BEAM 2

Location	Station	Offset	Theoretical Grade Elevations	Theoretical Grade Elevations Adjusted For Dead Load Deflection
Bk. W. Abut.	420+34.20	-29.17	751.57	751.57
℄ Brg. W. Abut.	420+36.03	-29.17	751.54	751.54
A	420+46.03	-29.17	751.38	751.38
B	420+56.03	-29.17	751.22	751.22
C	420+66.03	-29.17	751.06	751.05
℄ Brg. Pier 1	420+73.45	-29.17	750.93	750.93
D	420+83.45	-29.17	750.76	750.78
E	420+93.45	-29.17	750.58	750.63
F	421+03.45	-29.17	750.39	750.46
G	421+13.45	-29.17	750.21	750.27
H	421+23.45	-29.17	750.01	750.06
I	421+33.45	-29.17	749.81	749.83
℄ Brg. Pier 2	421+42.45	-29.17	749.63	749.63
J	421+52.45	-29.17	749.42	749.42
K	421+62.45	-29.17	749.21	749.21
L	421+72.45	-29.17	748.99	748.99
℄ Brg. E. Abut.	421+79.87	-29.17	748.83	748.83
Bk. E. Abut.	421+81.70	-29.17	748.79	748.79

BEAM 3

Location	Station	Offset	Theoretical Grade Elevations	Theoretical Grade Elevations Adjusted For Dead Load Deflection
Bk. W. Abut.	420+34.20	-23.33	751.67	751.67
℄ Brg. W. Abut.	420+36.03	-23.33	751.64	751.64
A	420+46.03	-23.33	751.49	751.49
B	420+56.03	-23.33	751.32	751.32
C	420+66.03	-23.33	751.16	751.15
℄ Brg. Pier 1	420+73.45	-23.33	751.03	751.03
D	420+83.45	-23.33	750.86	750.88
E	420+93.45	-23.33	750.68	750.73
F	421+03.45	-23.33	750.50	750.56
G	421+13.45	-23.33	750.31	750.37
H	421+23.45	-23.33	750.12	750.16
I	421+33.45	-23.33	749.92	749.94
℄ Brg. Pier 2	421+42.45	-23.33	749.73	749.73
J	421+52.45	-23.33	749.53	749.52
K	421+62.45	-23.33	749.31	749.31
L	421+72.45	-23.33	749.10	749.10
℄ Brg. E. Abut.	421+79.87	-23.33	748.93	748.93
Bk. E. Abut.	421+81.70	-23.33	748.89	748.89

BEAM 4

Location	Station	Offset	Theoretical Grade Elevations	Theoretical Grade Elevations Adjusted For Dead Load Deflection
Bk. W. Abut.	420+34.20	-17.50	751.76	751.76
℄ Brg. W. Abut.	420+36.03	-17.50	751.73	751.73
A	420+46.03	-17.50	751.57	751.57
B	420+56.03	-17.50	751.41	751.41
C	420+66.03	-17.50	751.25	751.24
℄ Brg. Pier 1	420+73.45	-17.50	751.12	751.12
D	420+83.45	-17.50	750.95	750.97
E	420+93.45	-17.50	750.77	750.81
F	421+03.45	-17.50	750.58	750.64
G	421+13.45	-17.50	750.40	750.45
H	421+23.45	-17.50	750.20	750.24
I	421+33.45	-17.50	750.00	750.02
℄ Brg. Pier 2	421+42.45	-17.50	749.82	749.82
J	421+52.45	-17.50	749.61	749.61
K	421+62.45	-17.50	749.40	749.40
L	421+72.45	-17.50	749.18	749.18
℄ Brg. E. Abut.	421+79.87	-17.50	749.02	749.02
Bk. E. Abut.	421+81.70	-17.50	748.98	748.98

BEAM 5

Location	Station	Offset	Theoretical Grade Elevations	Theoretical Grade Elevations Adjusted For Dead Load Deflection
Bk. W. Abut.	420+34.20	-11.67	751.84	751.84
℄ Brg. W. Abut.	420+36.03	-11.67	751.82	751.82
A	420+46.03	-11.67	751.66	751.66
B	420+56.03	-11.67	751.50	751.50
C	420+66.03	-11.67	751.33	751.33
℄ Brg. Pier 1	420+73.45	-11.67	751.21	751.21
D	420+83.45	-11.67	751.03	751.05
E	420+93.45	-11.67	750.86	750.89
F	421+03.45	-11.67	750.67	750.72
G	421+13.45	-11.67	750.48	750.53
H	421+23.45	-11.67	750.29	750.33
I	421+33.45	-11.67	750.09	750.11
℄ Brg. Pier 2	421+42.45	-11.67	749.91	749.91
J	421+52.45	-11.67	749.70	749.70
K	421+62.45	-11.67	749.49	749.49
L	421+72.45	-11.67	749.27	749.27
℄ Brg. E. Abut.	421+79.87	-11.67	749.11	749.11
Bk. E. Abut.	421+81.70	-11.67	749.07	749.07

BEAM 6

Location	Station	Offset	Theoretical Grade Elevations	Theoretical Grade Elevations Adjusted For Dead Load Deflection
Bk. W. Abut.	420+34.20	-5.83	751.93	751.93
℄ Brg. W. Abut.	420+36.03	-5.83	751.90	751.90
A	420+46.03	-5.83	751.75	751.75
B	420+56.03	-5.83	751.59	751.58
C	420+66.03	-5.83	751.42	751.42
℄ Brg. Pier 1	420+73.45	-5.83	751.30	751.30
D	420+83.45	-5.83	751.12	751.14
E	420+93.45	-5.83	750.94	750.99
F	421+03.45	-5.83	750.76	750.82
G	421+13.45	-5.83	750.57	750.63
H	421+23.45	-5.83	750.38	750.42
I	421+33.45	-5.83	750.18	750.20
℄ Brg. Pier 2	421+42.45	-5.83	750.00	750.00
J	421+52.45	-5.83	749.79	749.78
K	421+62.45	-5.83	749.58	749.57
L	421+72.45	-5.83	749.36	749.36
℄ Brg. E. Abut.	421+79.87	-5.83	749.19	749.19
Bk. E. Abut.	421+81.70	-5.83	749.15	749.15

WB P.G.L.

Location	Station	Offset	Theoretical Grade Elevations	Theoretical Grade Elevations Adjusted For Dead Load Deflection
Bk. W. Abut.	420+34.20	-4.00	751.96	751.96
℄ Brg. W. Abut.	420+36.03	-4.00	751.93	751.93
A	420+46.03	-4.00	751.78	751.78
B	420+56.03	-4.00	751.61	751.61
C	420+66.03	-4.00	751.45	751.44
℄ Brg. Pier 1	420+73.45	-4.00	751.32	751.32
D	420+83.45	-4.00	751.15	751.17
E	420+93.45	-4.00	750.97	751.02
F	421+03.45	-4.00	750.79	750.85
G	421+13.45	-4.00	750.60	750.66
H	421+23.45	-4.00	750.41	750.45
I	421+33.45	-4.00	750.21	750.23
℄ Brg. Pier 2	421+42.45	-4.00	750.02	750.02
J	421+52.45	-4.00	749.82	749.81
K	421+62.45	-4.00	749.60	749.60
L	421+72.45	-4.00	749.39	749.39
℄ Brg. E. Abut.	421+79.87	-4.00	749.22	749.22
Bk. E. Abut.	421+81.70	-4.00	749.18	749.18

℄ US 20 & BEAM 7

Location	Station	Offset	Theoretical Grade Elevations	Theoretical Grade Elevations Adjusted For Dead Load Deflection
Bk. W. Abut.	420+34.20	0.00	752.02	752.02
℄ Brg. W. Abut.	420+36.03	0.00	751.99	751.99
A	420+46.03	0.00	751.84	751.84
B	420+56.03	0.00	751.67	751.67
C	420+66.03	0.00	751.51	751.50
℄ Brg. Pier 1	420+73.45	0.00	751.38	751.38
D	420+83.45	0.00	751.21	751.23
E	420+93.45	0.00	751.03	751.08
F	421+03.45	0.00	750.85	750.91
G	421+13.45	0.00	750.66	750.72
H	421+23.45	0.00	750.47	750.51
I	421+33.45	0.00	750.27	750.29
℄ Brg. Pier 2	421+42.45	0.00	750.08	750.08
J	421+52.45	0.00	749.88	749.87
K	421+62.45	0.00	749.66	749.66
L	421+72.45	0.00	749.45	749.45
℄ Brg. E. Abut.	421+79.87	0.00	749.28	749.28
Bk. E. Abut.	421+81.70	0.00	749.24	749.24

STAGE CONSTRUCTION JOINT

Location	Station	Offset	Theoretical Grade Elevations	Theoretical Grade Elevations Adjusted For Dead Load Deflection
Bk. W. Abut.	420+34.20	2.50	751.98	751.98
℄ Brg. W. Abut.	420+36.03	2.50	751.95	751.95
A	420+46.03	2.50	751.80	751.80
B	420+56.03	2.50	751.64	751.63
C	420+66.03	2.50	751.47	751.47
℄ Brg. Pier 1	420+73.45	2.50	751.35	751.35
D	420+83.45	2.50	751.17	751.19
E	420+93.45	2.50	750.99	751.04
F	421+03.45	2.50	750.81	750.87
G	421+13.45	2.50	750.62	750.68
H	421+23.45	2.50	750.43	750.47
I	421+33.45	2.50	750.23	750.25
℄ Brg. Pier 2	421+42.45	2.50	750.05	750.05
J	421+52.45	2.50	749.84	749.83
K	421+62.45	2.50	749.63	749.62
L	421+72.45	2.50	749.41	749.41
℄ Brg. E. Abut.	421+79.87	2.50	749.24	749.24
Bk. E. Abut.	421+81.70	2.50	749.20	749.20

EB P.G.L.

Location	Station	Offset	Theoretical Grade Elevations	Theoretical Grade Elevations Adjusted For Dead Load Deflection
Bk. W. Abut.	420+34.20	4.00	751.96	751.96
℄ Brg. W. Abut.	420+36.03	4.00	751.93	751.93
A	420+46.03	4.00	751.78	751.78
B	420+56.03	4.00	751.61	751.61
C	420+66.03	4.00	751.45	751.44
℄ Brg. Pier 1	420+73.45	4.00	751.32	751.32
D	420+83.45	4.00	751.15	751.17
E	420+93.45	4.00	750.97	751.02
F	421+03.45	4.00	750.79	750.85
G	421+13.45	4.00	750.60	750.66
H	421+23.45	4.00	750.41	750.45
I	421+33.45	4.00	750.21	750.23
℄ Brg. Pier 2	421+42.45	4.00	750.02	750.02
J	421+52.45	4.00	749.82	749.81
K	421+62.45	4.00	749.60	749.60
L	421+72.45	4.00	749.39	749.39
℄ Brg. E. Abut.	421+79.87	4.00	749.22	749.22
Bk. E. Abut.	421+81.70	4.00	749.18	749.18

BEAM 8

Location	Station	Offset	Theoretical Grade Elevations	Theoretical Grade Elevations Adjusted For Dead Load Deflection
Bk. W. Abut.	420+34.20	5.83	751.93	751.93
℄ Brg. W. Abut.	420+36.03	5.83	751.90	751.90
A	420+46.03	5.83	751.75	751.75
B	420+56.03	5.83	751.59	751.58
C	420+66.03	5.83	751.42	751.42
℄ Brg. Pier 1	420+73.45	5.83	751.30	751.30
D	420+83.45	5.83	751.12	751.14
E	420+93.45	5.83	750.94	750.99
F	421+03.45	5.83	750.76	750.82
G	421+13.45	5.83	750.57	750.63
H	421+23.45	5.83	750.38	750.42
I	421+33.45	5.83	750.18	750.20
℄ Brg. Pier 2	421+42.45	5.83	750.00	750.00
J	421+52.45	5.83	749.79	749.78
K	421+62.45	5.83	749.58	749.57
L	421+72.45	5.83	749.36	749.36
℄ Brg. E. Abut.	421+79.87	5.83	749.19	749.19
Bk. E. Abut.	421+81.70	5.83	749.15	749.15

BEAM 9

Location	Station	Offset	Theoretical Grade Elevations	Theoretical Grade Elevations Adjusted For Dead Load Deflection
Bk. W. Abut.	420+34.20	11.67	751.84	751.84
℄ Brg. W. Abut.	420+36.03	11.67	751.82	751.82
A	420+46.03	11.67	751.66	751.66
B	420+56.03	11.67	751.50	751.50
C	420+66.03	11.67	751.33	751.33
℄ Brg. Pier 1	420+73.45	11.67	751.21	751.21
D	420+83.45	11.67	751.03	751.05
E	420+93.45	11.67	750.86	750.89
F	421+03.45	11.67	750.67	750.72
G	421+13.45	11.67	750.48	750.53
H	421+23.45	11.67	750.29	750.33
I	421+33.45	11.67	750.09	750.11
℄ Brg. Pier 2	421+42.45	11.67	749.91	749.91
J	421+52.45	11.67	749.70	749.70
K	421+62.45	11.67	749.49	749.49
L	421+72.45	11.67	749.27	749.27
℄ Brg. E. Abut.	421+79.87	11.67	749.11	749.11
Bk. E. Abut.	421+81.70	11.67	749.07	749.07

BEAM 10

Location	Station	Offset	Theoretical Grade Elevations	Theoretical Grade Elevations Adjusted For Dead Load Deflection
Bk. W. Abut.	420+34.20	17.50	751.76	751.76
℄ Brg. W. Abut.	420+36.03	17.50	751.73	751.73
A	420+46.03	17.50	751.57	751.57
B	420+56.03	17.50	751.41	751.41
C	420+66.03	17.50	751.25	751.24
℄ Brg. Pier 1	420+73.45	17.50	751.12	751.12
D	420+83.45	17.50	750.95	750.97
E	420+93.45	17.50	750.77	750.81
F	421+03.45	17.50	750.58	750.64
G	421+13.45	17.50	750.40	750.45
H	421+23.45	17.50	750.20	750.24
I	421+33.45	17.50	750.00	750.02
℄ Brg. Pier 2	421+42.45	17.50	749.82	749.82
J	421+52.45	17.50	749.61	749.61
K	421+62.45	17.50	749.40	749.40
L	421+72.45	17.50	749.18	749.18
℄ Brg. E. Abut.	421+79.87	17.50	749.02	749.02
Bk. E. Abut.	421+81.70	17.50	748.98	748.98

BEAM 11

Location	Station	Offset	Theoretical Grade Elevations	Theoretical Grade Elevations Adjusted For Dead Load Deflection
Bk. W. Abut.	420+34.20	23.33	751.67	751.67
℄ Brg. W. Abut.	420+36.03	23.33	751.64	751.64
A	420+46.03	23.33	751.49	751.49
B	420+56.03	23.33	751.32	751.32
C	420+66.03	23.33	751.16	751.16
℄ Brg. Pier 1	420+73.45	23.33	751.03	751.03
D	420+83.45	23.33	750.86	750.88
E	420+93.45	23.33	750.68	750.72
F	421+03.45	23.33	750.50	750.55
G	421+13.45	23.33	750.31	750.36
H	421+23.45	23.33	750.12	750.15
I	421+33.45	23.33	749.92	749.93
℄ Brg. Pier 2	421+42.45	23.33	749.73	749.73
J	421+52.45	23.33	749.53	749.52
K	421+62.45	23.33	749.31	749.31
L	421+72.45	23.33	749.10	749.10
℄ Brg. E. Abut.	421+79.87	23.33	748.93	748.93
Bk. E. Abut.	421+81.70	23.33	748.89	748.89

BEAM 12

Location	Station	Offset	Theoretical Grade Elevations	Theoretical Grade Elevations Adjusted For Dead Load Deflection
Bk. W. Abut.	420+34.20	29.17	751.57	751.57
℄ Brg. W. Abut.	420+36.03	29.17	751.54	751.54
A	420+46.03	29.17	751.38	751.38
B	420+56.03	29.17	751.22	751.22
C	420+66.03	29.17	751.06	751.05
℄ Brg. Pier 1	420+73.45	29.17	750.93	750.93
D	420+83.45	29.17	750.76	750.78
E	420+93.45	29.17	750.58	750.62
F	421+03.45	29.17	750.39	750.45
G	421+13.45	29.17	750.21	750.27
H	421+23.45	29.17	750.01	750.06
I	421+33.45	29.17	749.81	749.83
℄ Brg. Pier 2	421+42.45	29.17	749.63	749.63
J	421+52.45	29.17	749.42	749.42
K	421+62.45	29.17	749.21	749.21
L	421+72.45	29.17	748.99	748.99
℄ Brg. E. Abut.	421+79.87	29.17	748.83	748.83
Bk. E. Abut.	421+81.70	29.17	748.79	748.79

BEAM 13

Location	Station	Offset	Theoretical Grade Elevations	Theoretical Grade Elevations Adjusted For Dead Load Deflection
Bk. W. Abut.	420+34.20	33.71	751.47	751.47
℄ Brg. W. Abut.	420+36.03	33.69	751.45	751.45
A	420+46.03	33.58	751.29	751.29
B	420+56.03	33.47	751.14	751.13
C	420+66.03	33.36	750.97	750.97
℄ Brg. Pier 1	420+73.45	33.28	750.85	750.85
D	420+83.45	33.17	750.68	750.70
E	420+93.45	33.06	750.50	750.54
F	421+03.45	32.95	750.32	750.37
G	421+13.45	32.84	750.13	750.19
H	421+23.45	32.73	749.94	749.98
I	421+33.45	32.62	749.74	749.76
℄ Brg. Pier 2	421+42.45	32.52	749.56	749.56
J	421+52.45	32.41	749.36	749.35
K	421+62.45	32.30	749.15	749.15
L	421+72.45	32.19	748.93	748.93
℄ Brg. E. Abut.	421+79.87	32.11	748.77	748.77
Bk. E. Abut.	421+81.70	32.09	748.73	748.73

BEAM 14

Location	Station	Offset	Theoretical Grade Elevations	Theoretical Grade Elevations Adjusted For Dead Load Deflection
Bk. W. Abut.	420+34.20	38.25	751.38	751.38
℄ Brg. W. Abut.	420+36.03	38.21	751.36	751.36
A	420+46.03	37.99	751.21	751.21
B	420+56.03	37.77	751.05	751.05
C	420+66.03	37.55	750.89	750.88
℄ Brg. Pier 1	420+73.45	37.39	750.77	750.77
D	420+83.45	37.17	750.60	750.62
E	420+93.45	36.95	750.42	750.46
F	421+03.45	36.73	750.24	750.30
G	421+13.45	36.51	750.06	750.11
H	421+23.45	36.29	749.87	749.91
I	421+33.45	36.07	749.68	749.69
℄ Brg. Pier 2	421+42.45	35.87	749.50	749.50
J	421+52.45	35.65	749.29	749.29
K	421+62.45	35.43	749.09	749.08
L	421+72.45	35.21	748.87	748.87
℄ Brg. E. Abut.	421+79.87	35.05	748.71	748.71
Bk. E. Abut.	421+81.70	35.01	748.67	748.67

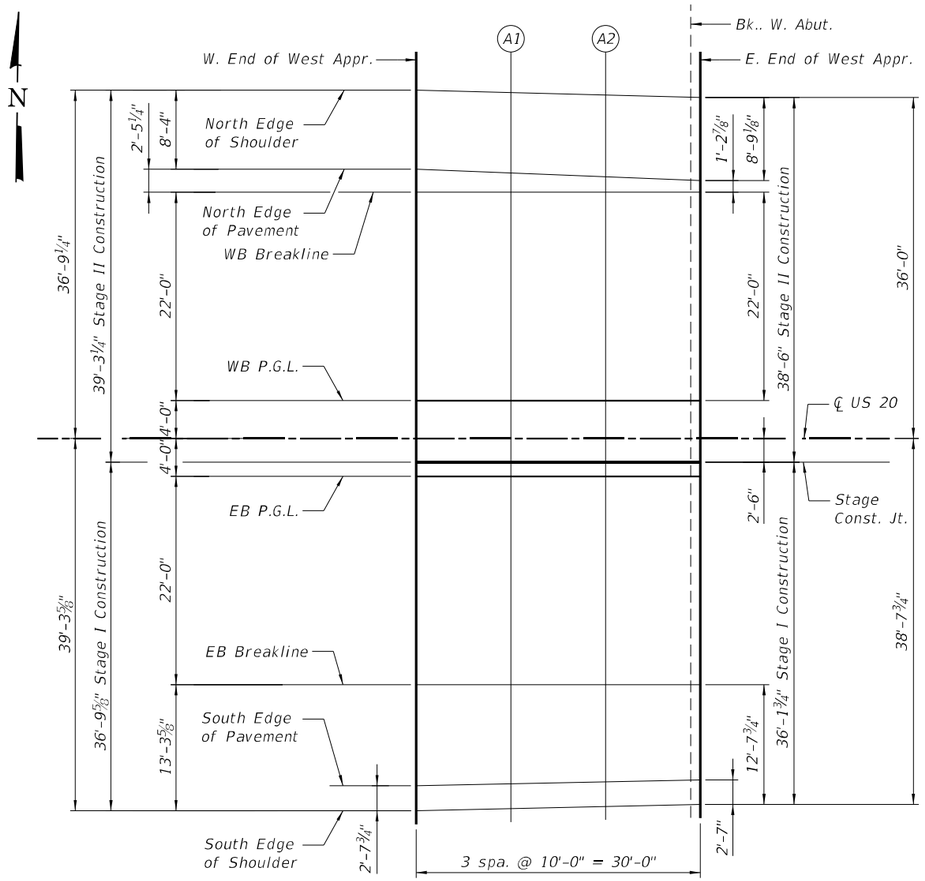

PLAN

NORTH EDGE OF SHOULDER

Location	Station	Offset	Theoretical Grade Elevations
W. End West Appr.	420+05.20	-36.77	751.83
A1	420+15.20	-36.51	751.70
A2	420+25.20	-36.26	751.56
E. End West Appr.	420+35.20	-36.00	751.41

STAGE CONSTRUCTION JOINT

Location	Station	Offset	Theoretical Grade Elevations
W. End West Appr.	420+05.20	2.50	752.40
A1	420+15.20	2.50	752.26
A2	420+25.20	2.50	752.12
E. End West Appr.	420+35.20	2.50	751.97

NORTH EDGE OF PAVEMENT

Location	Station	Offset	Theoretical Grade Elevations
W. End West Appr.	420+05.20	-28.44	752.00
A1	420+15.20	-28.04	751.87
A2	420+25.20	-27.64	751.73
E. End West Appr.	420+35.20	-27.24	751.59

EB P.G.L.

Location	Station	Offset	Theoretical Grade Elevations
W. End West Appr.	420+05.20	4.00	752.38
A1	420+15.20	4.00	752.24
A2	420+25.20	4.00	752.09
E. End West Appr.	420+35.20	4.00	751.94

WB BREAKLINE

Location	Station	Offset	Theoretical Grade Elevations
W. End West Appr.	420+05.20	-26.00	752.05
A1	420+15.20	-26.00	751.91
A2	420+25.20	-26.00	751.76
E. End West Appr.	420+35.20	-26.00	751.61

EB BREAKLINE

Location	Station	Offset	Theoretical Grade Elevations
W. End West Appr.	420+05.20	26.00	752.05
A1	420+15.20	26.00	751.91
A2	420+25.20	26.00	751.76
E. End West Appr.	420+35.20	26.00	751.61

WB P.G.L.

Location	Station	Offset	Theoretical Grade Elevations
W. End West Appr.	420+05.20	-4.00	752.38
A1	420+15.20	-4.00	752.24
A2	420+25.20	-4.00	752.09
E. End West Appr.	420+35.20	-4.00	751.94

SOUTH EDGE OF PAVEMENT

Location	Station	Offset	Theoretical Grade Elevations
W. End West Appr.	420+05.20	36.66	751.84
A1	420+15.20	36.46	751.70
A2	420+25.20	36.26	751.56
E. End West Appr.	420+35.20	36.06	751.41

℄ US 20

Location	Station	Offset	Theoretical Grade Elevations
W. End West Appr.	420+05.20	0.00	752.44
A1	420+15.20	0.00	752.30
A2	420+25.20	0.00	752.15
E. End West Appr.	420+35.20	0.00	752.00

SOUTH EDGE OF SHOULDER

Location	Station	Offset	Theoretical Grade Elevations
W. End West Appr.	420+05.20	39.30	751.78
A1	420+15.20	39.08	751.65
A2	420+25.20	38.86	751.51
E. End West Appr.	420+35.20	38.65	751.36

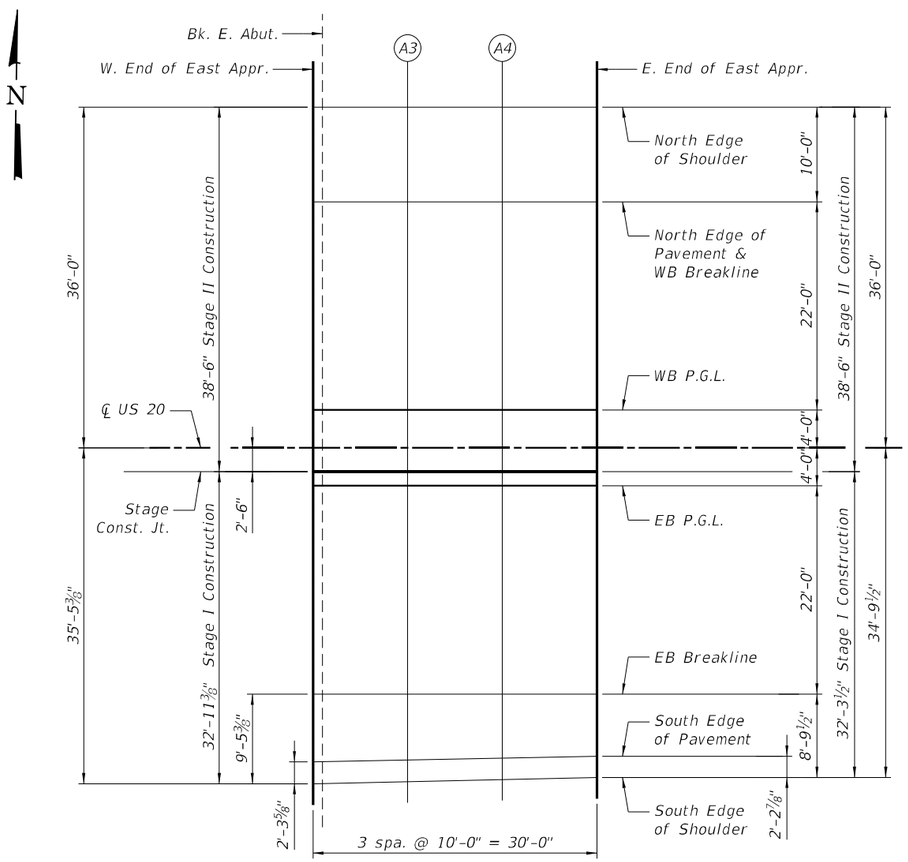

PLAN

NORTH EDGE OF SHOULDER

Location	Station	Offset	Theoretical Grade Elevations
W. End East Appr.	421+80.70	-36.00	748.67
A3	421+90.70	-36.00	748.45
A4	422+00.70	-36.00	748.22
E. End East Appr.	422+10.70	-36.00	747.98

EB P.G.L.

Location	Station	Offset	Theoretical Grade Elevations
W. End East Appr.	421+80.70	4.00	749.20
A3	421+90.70	4.00	748.98
A4	422+00.70	4.00	748.75
E. End East Appr.	422+10.70	4.00	748.51

NORTH EDGE OF PAVEMENT & WB BREAKLINE

Location	Station	Offset	Theoretical Grade Elevations
W. End East Appr.	421+80.70	-26.00	748.87
A3	421+90.70	-26.00	748.65
A4	422+00.70	-26.00	748.42
E. End East Appr.	422+10.70	-26.00	748.18

EB BREAKLINE

Location	Station	Offset	Theoretical Grade Elevations
W. End East Appr.	421+80.70	26.00	748.87
A3	421+90.70	26.00	748.65
A4	422+00.70	26.00	748.42
E. End East Appr.	422+10.70	26.00	748.18

WB P.G.L.

Location	Station	Offset	Theoretical Grade Elevations
W. End East Appr.	421+80.70	-4.00	749.20
A3	421+90.70	-4.00	748.98
A4	422+00.70	-4.00	748.75
E. End East Appr.	422+10.70	-4.00	748.51

SOUTH EDGE OF PAVEMENT

Location	Station	Offset	Theoretical Grade Elevations
W. End East Appr.	421+80.70	33.15	748.73
A3	421+90.70	32.95	748.51
A4	422+00.70	32.75	748.28
E. End East Appr.	422+10.70	32.55	748.05

℄ US 20

Location	Station	Offset	Theoretical Grade Elevations
W. End East Appr.	421+80.70	0.00	749.26
A3	421+90.70	0.00	749.04
A4	422+00.70	0.00	748.81
E. End East Appr.	422+10.70	0.00	748.57

SOUTH EDGE OF SHOULDER

Location	Station	Offset	Theoretical Grade Elevations
W. End East Appr.	421+80.70	35.45	748.68
A3	421+90.70	35.23	748.46
A4	422+00.70	35.01	748.24
E. End East Appr.	422+10.70	34.79	748.01

STAGE CONSTRUCTION JOINT

Location	Station	Offset	Theoretical Grade Elevations
W. End East Appr.	421+80.70	2.50	749.23
A3	421+90.70	2.50	749.00
A4	422+00.70	2.50	748.77
E. End East Appr.	422+10.70	2.50	748.53

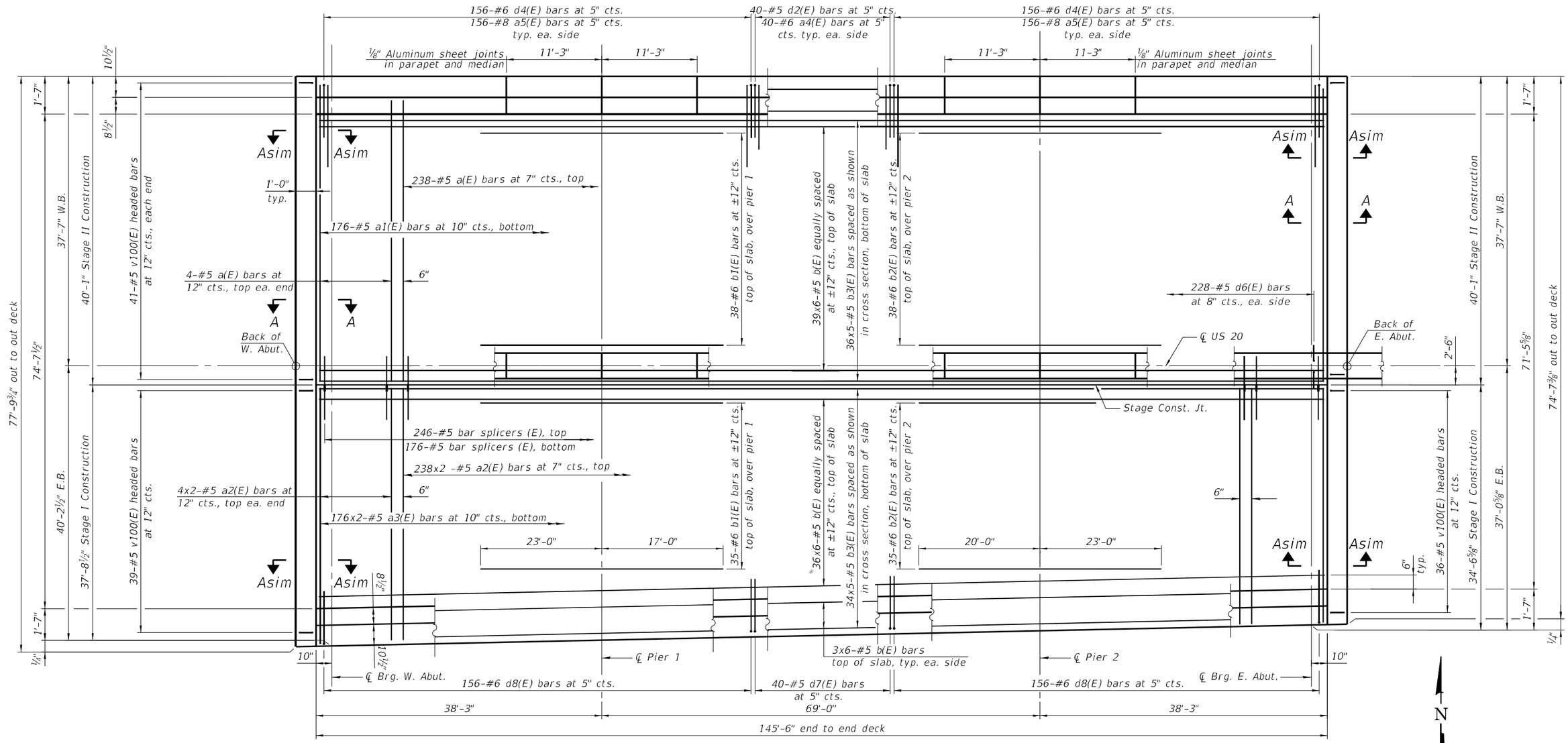

PLAN

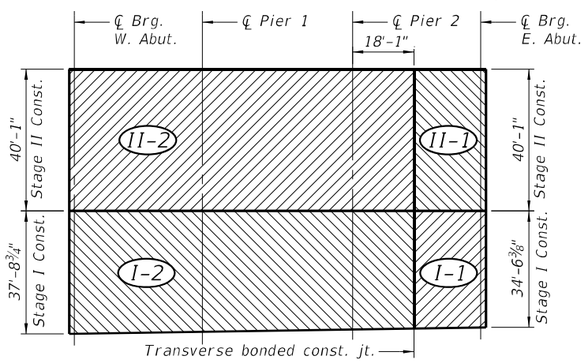

DECK POUR SEQUENCE

DECK POUR NOTES

1. Each pour sequence shall begin from the abutment.
2. When the deck pour is stopped for the day at the transverse bonded construction joint in the deck pouring sequence as shown, the next pour shall not be made until both of the following are met:
   1) At least 72 hours shall have elapsed from the end of the previous pour.
   2) The concrete strength shall have attained a minimum flexural strength of 675 psi or a minimum compressive strength of 4000 psi.

MINIMUM BAR LAP

#5 bar = 3'-6"

* Flare bars at east end to ±6" cts. to fit taper.

Notes:

See sheet 13 of 35 for superstructure cross section.

See sheet 14 of 35 for superstructure details and Bill of Material.

See sheet 18 of 35 for Section A-A and Section Asim-Asim.

Bars indicated thus 20 x 3-#5 etc. indicates 20 lines of bars with 3 lengths per line.

Modifications to the deck pour sequence requires analysis by the Contractor prior to the deck pour as approved by the Engineer. The Contractor may elect to pour the deck starting from either abutment and continuing for the length of the bridge, however this sequence produces an uplift force at the far abutment. Modifications to the pouring sequence needed, such as temporary hold downs or analysis of the deck pour, shall be included in the cost of Concrete Superstructures.

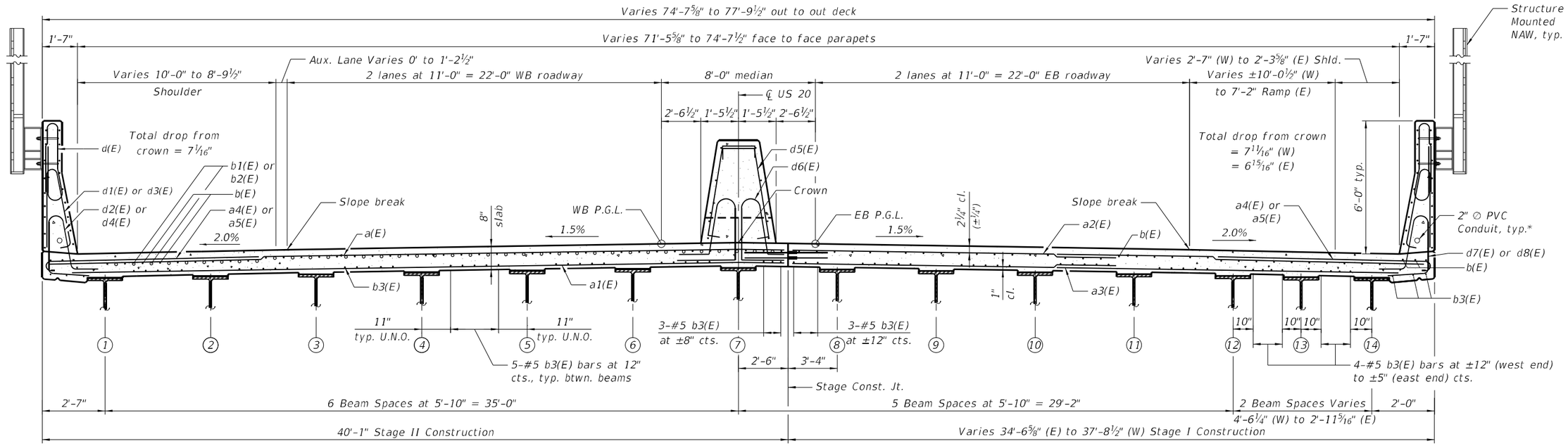

CROSS SECTION

(Looking East)
Dimensions taken at CL. bearing of abutments
*North and South parapet, see electrical plans.

MODEL: Default
FILE NAME: pw://gfnet-pw.bentley.com:gfnet-pw-01/Documents/Projects/68096/Project WorkingA_CADD/62U83-Contract1/Sheets/045-0007/0450007-62U83-013-XS.dgn

GANNETT FLEMING

USER NAME = jstarzyk	DESIGNED - SS	REVISED -	
	CHECKED - MZ	REVISED -	
PLOT SCALE =	DRAWN - LAM	REVISED -	
PLOT DATE = 3/20/2024	CHECKED - MZ	REVISED -	

STATE OF ILLINOIS
DEPARTMENT OF TRANSPORTATION

SUPERSTRUCTURE CROSS SECTION
STRUCTURE NO. 045-0007

SHEET 13 OF 35 SHEETS

F.A.P. RTE.	SECTION	COUNTY	TOTAL SHEETS	SHEET NO.
345	FAP 345-23-BR	KANE	379	186
		CONTRACT NO. 62U83		
		ILLINOIS	FED. AID PROJECT	

3/20/2024 4:39:44 PM

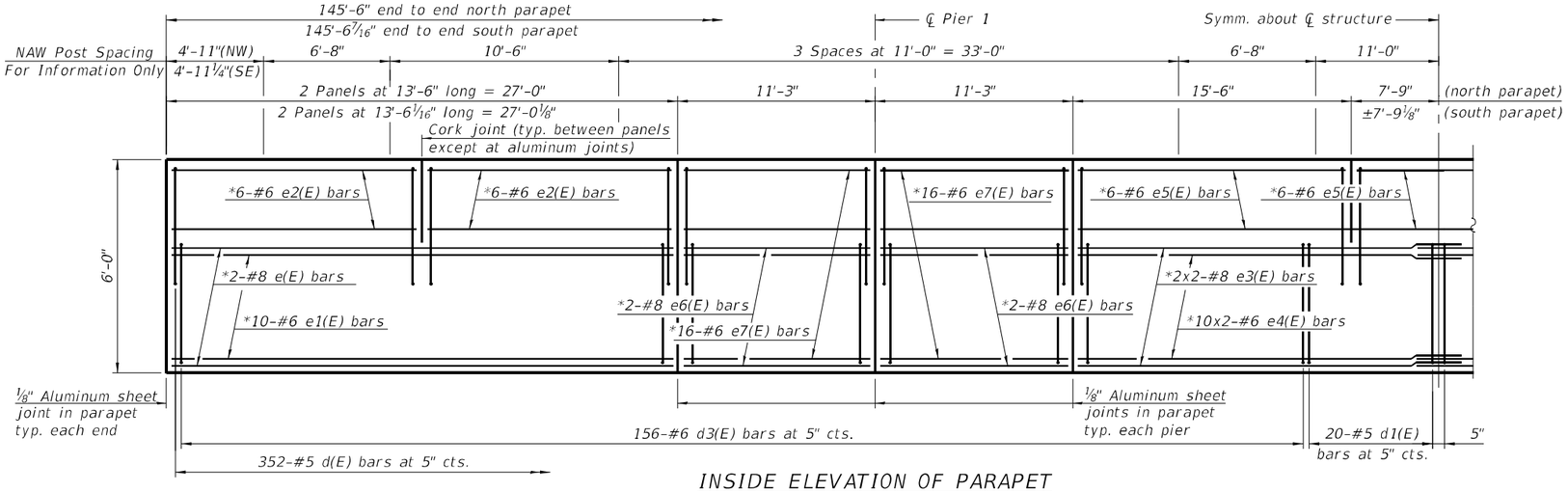

INSIDE ELEVATION OF PARAPET

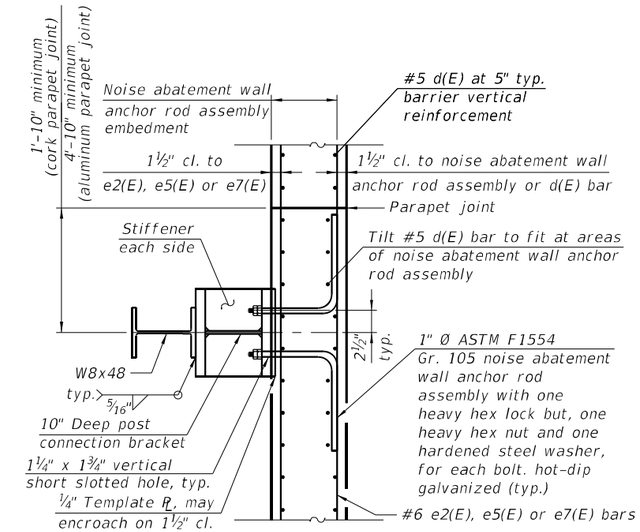

SECTION X-X

MINIMUM BAR LAP

#6 bar = 3'-7"
#8 bar = 5'-11"

* See Section thru Parapet.
** Anchor Rod to be installed by bridge contractor, typ.
*** ¼" Anchor Rod Template ℄ embedded in parapet, to be installed by bridge contractor.

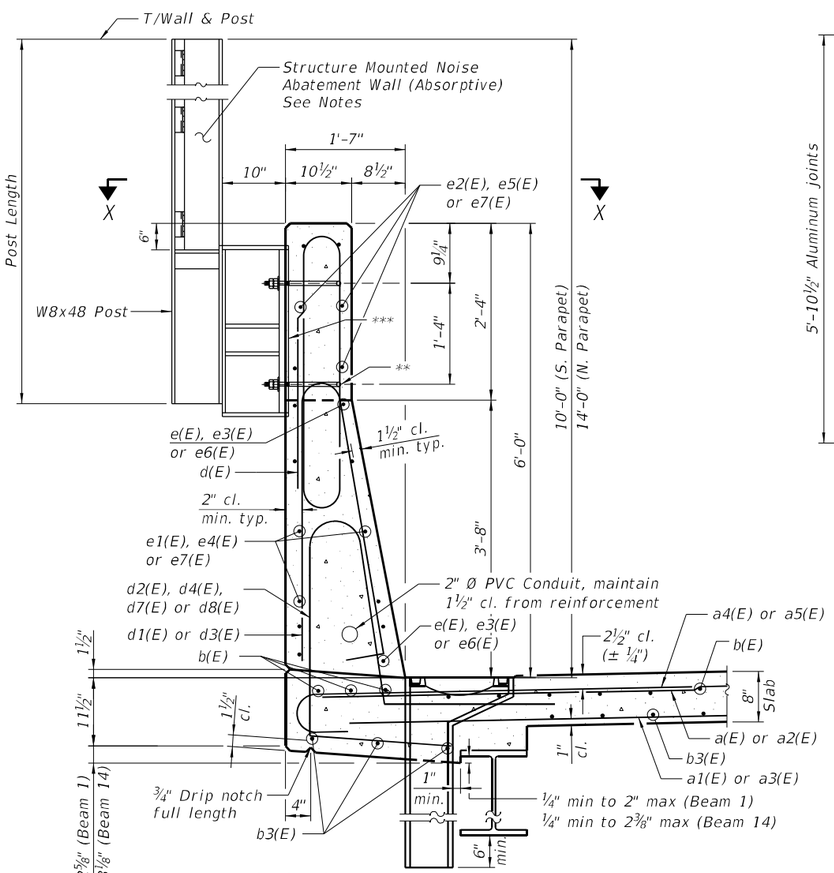

SECTION THRU PARAPET

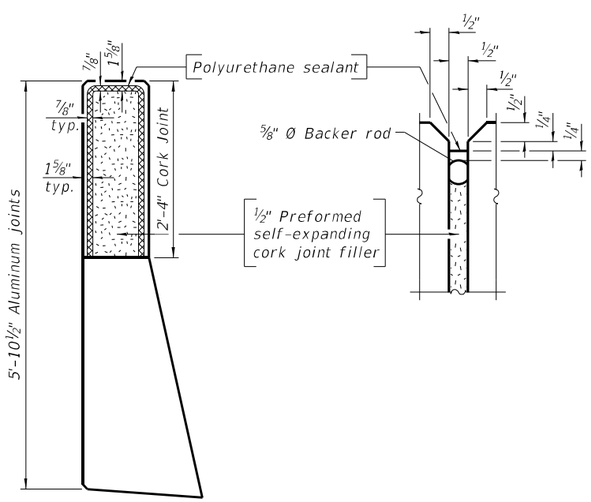

PARAPET JOINT DETAILS

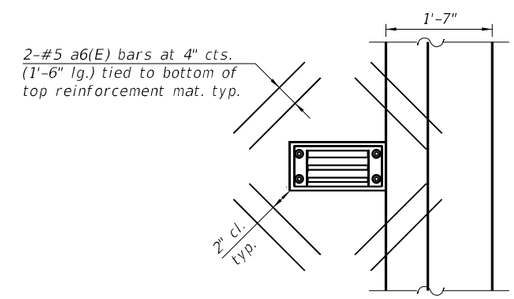

SCUPPER PLAN

Cut longitudinal reinforcement to clear drainage scuppers.

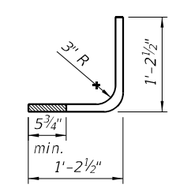

NOSE ABATEMENT WALL
ANCHOR ROD ASSEMBLY

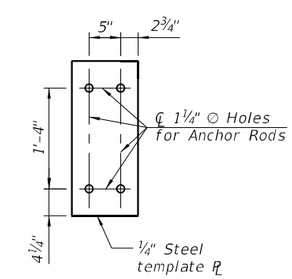

TEMPLATE PLATE FOR
NOISE ABATEMENT WALL
ANCHOR ROD ASSEMBLY

Notes:

The ⅛" aluminum sheet shall be ASTM B 209 alloy 3003-H14 and coated to minimize reaction with wet concrete.

Cost included with Concrete Superstructure.

The polyurethane sealant shall be according to Article 1050.04 of the Std. Spec. and the color shall be gray.

Bars indicated thus 1 x 2-#4 etc. indicates 1 line of bars with 2 lengths per line.

Post and post connection details shown on bridge plans for information only. See Noise Abatement Wall plans for full details.

MODEL: Default
FILE NAME: pw://gfnet-pw.bentley.com:gfnet-pw-01/Documents/Projects/68096/Project Working/A_CADD/62U83-Contract1/Sheets/045-0007/0450007-62U83-014-SD1.dgn
3/20/2024 4:39:47 PM

GANNETT FLEMING

USER NAME = jstarzyk	DESIGNED - SS	REVISED -	
	CHECKED - MZ	REVISED -	
PLOT SCALE =	DRAWN - LAM	REVISED -	
PLOT DATE = 3/20/2024	CHECKED - MZ	REVISED -	

STATE OF ILLINOIS
DEPARTMENT OF TRANSPORTATION

SUPERSTRUCTURE DETAILS I
STRUCTURE NO. 045-0007

SHEET 14 OF 35 SHEETS

F.A.P. RTE.	SECTION	COUNTY	TOTAL SHEETS	SHEET NO.
345	FAP 345-23-BR	KANE	379	187
		CONTRACT NO. 62U83		
		ILLINOIS	FED. AID PROJECT	

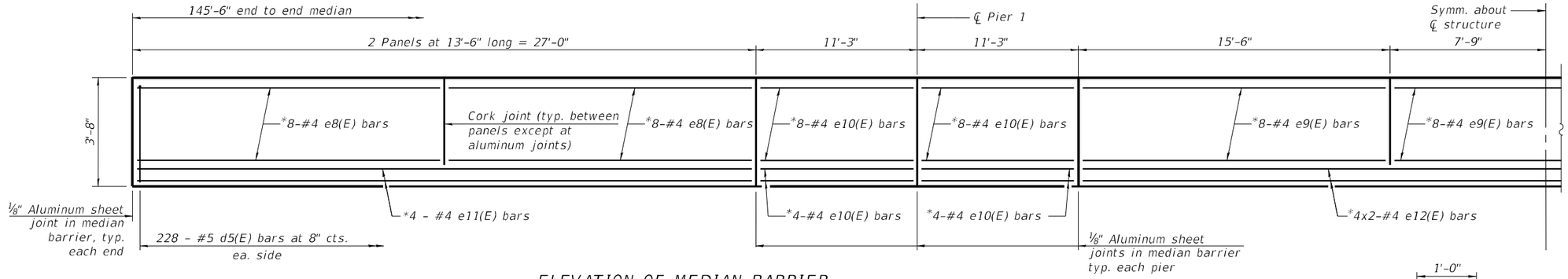

ELEVATION OF MEDIAN BARRIER

* See Section thru median barrier

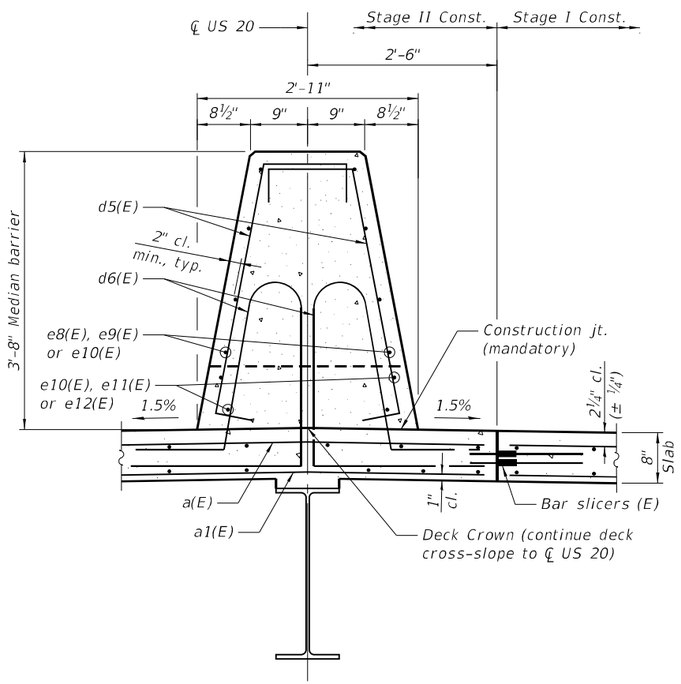

SECTION THRU MEDIAN BARRIER

(Looking East)

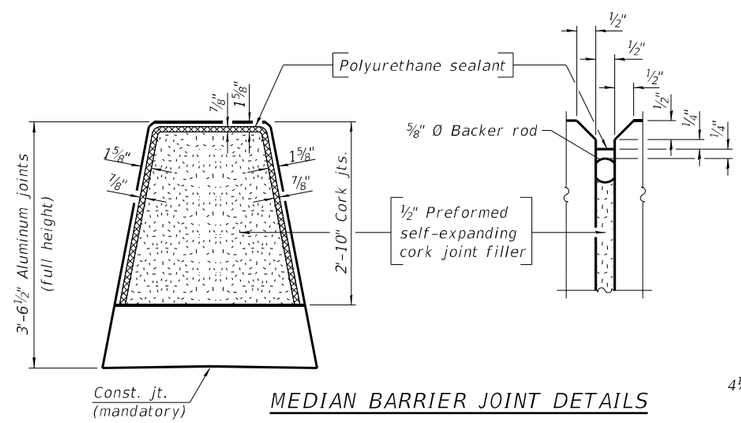

MEDIAN BARRIER JOINT DETAILS

Notes:
See sheet 14 of 35 for notes.

MINIMUM BAR LAP

#4 bar = 2'-5"

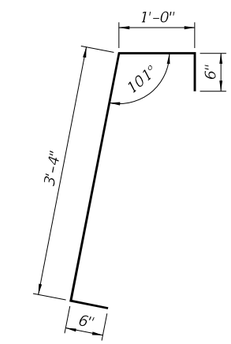

BAR d5(E)

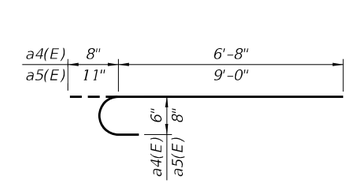

BAR a4(E) or a5(E)

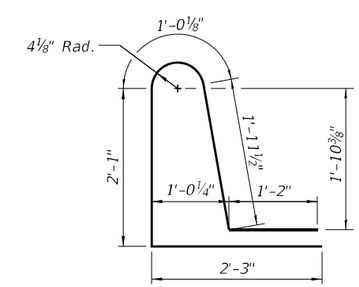

BAR d6(E)

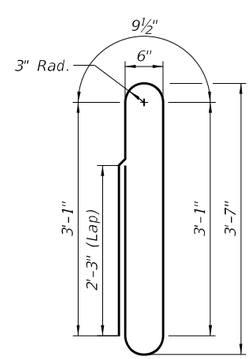

BAR d(E)

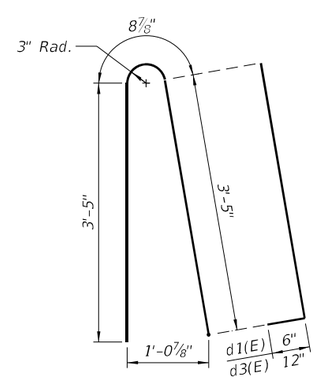

BAR d1(E) or d3(E)

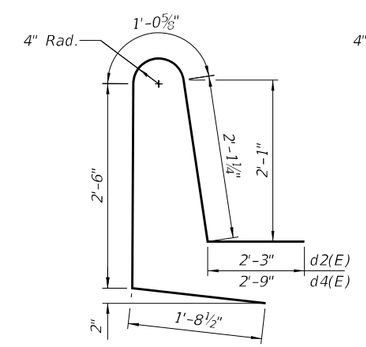

BAR d2(E) or d4(E)

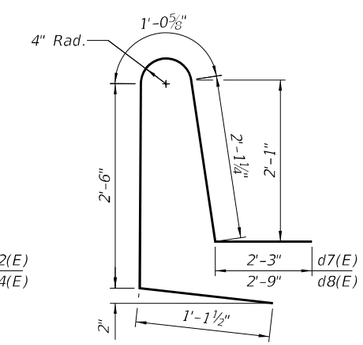

BAR d7(E) or d8(E)

SUPERSTRUCTURE BILL OF MATERIAL

Bar	No.	Size	Length	Shape
a(E)	246	#5	39'-9"	
a1(E)	176	#5	39'-6"	
a2(E)	492	#5	20'-4"	
a3(E)	352	#5	20'-2"	
a4(E)	80	#6	7'-4"	
a5(E)	624	#8	9'-11"	
a6(E)	32	#5	1'-6"	
b(E)	486	#5	27'-2"	
b1(E)	73	#6	40'-0"	
b2(E)	73	#6	43'-0"	
b3(E)	350	#5	31'-10"	
d(E)	704	#5	10'-0"	
d1(E)	80	#5	8'-1"	
d2(E)	40	#5	9'-7"	
d3(E)	624	#6	8'-7"	
d4(E)	312	#6	10'-1"	
d5(E)	456	#5	5'-4"	
d6(E)	456	#5	8'-6"	
d7(E)	40	#5	9'-1"	
d8(E)	312	#6	9'-7"	
e(E)	8	#8	26'-8"	
e1(E)	40	#6	26'-8"	
e2(E)	48	#6	13'-2"	
e3(E)	8	#8	26'-1"	
e4(E)	40	#6	24'-11"	
e5(E)	36	#6	15'-2"	
e6(E)	16	#8	10'-11"	
e7(E)	128	#6	10'-11"	
e8(E)	32	#4	13'-2"	
e9(E)	24	#4	15'-2"	
e10(E)	48	#4	10'-11"	
e11(E)	8	#4	26'-8"	
e12(E)	8	#4	24'-4"	
m10(E)	5	#6	35'-3"	
m11(E)	44	#6	5'-6"	
m12(E)	4	#6	4'-2"	
m13(E)	44	#6	5'-6"	
m14(E)	4	#6	4'-2"	
m15(E)	8	#6	0'-9"	
m16(E)	4	#4	18'-11"	
m17(E)	10	#6	38'-2"	
m18(E)	8	#4	20'-4"	
m19(E)	5	#6	32'-1"	
m20(E)	4	#6	2'-7"	
m21(E)	4	#6	2'-7"	
m22(E)	4	#4	17'-3"	
s10(E)	128	#5	7'-8"	
s11(E)	128	#5	9'-0"	
u10(E)	128	#4	4'-6"	
v100(E)	157	#5	3'-1"	
Concrete Superstructure			Cu. Yd.	449.8
Bridge Deck Grooving			Sq. Yd.	1,071
Protective Coat			Sq. Yd.	1,504
Reinforcement Bars, Epoxy Coated			Pound	134,800
Noise Abatement Wall Anchor Rod Assembly			Each	30
Bar Terminators			Each	517

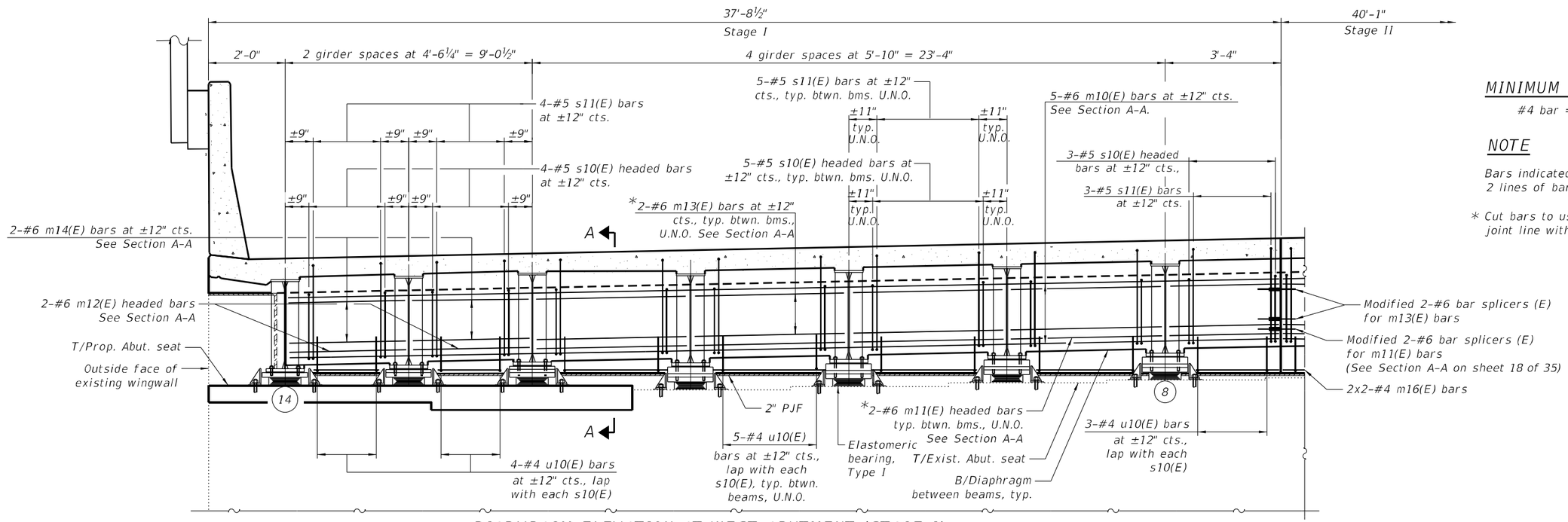

DIAPHRAGM ELEVATION AT WEST ABUTMENT (STAGE I)

(Looking West)

MINIMUM BAR LAP

#4 bar = 2'-5"

NOTE

Bars indicated thus 2x2-#4 etc. indicates 2 lines of bars with 2 lengths per line.

* Cut bars to use on either side of stage joint line with modified bar splicers.

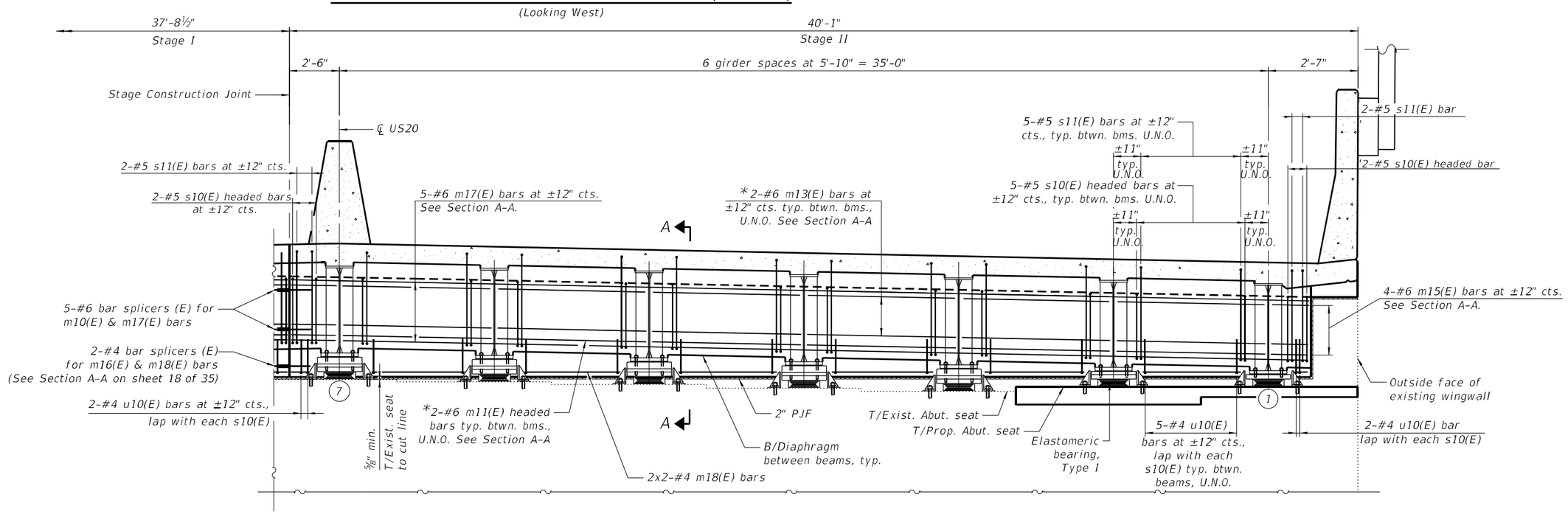

DIAPHRAGM ELEVATION AT WEST ABUTMENT (STAGE II)

(Looking West)

MODEL: Default
FILE NAME: pw://gfnet-pw.bentley.com:gfnet-pw01/Documents/Projects/68096/Project Working/A_CADD/62U83-Contract1/Sheets/045-0007/0450007-62U83-016-DD1.dgn

3/20/2024 4:39:56 PM

GANNETT FLEMING

USER NAME = jstarzyk	DESIGNED - SS	REVISED -	
	CHECKED - MZ	REVISED -	
PLOT SCALE =	DRAWN - LAM	REVISED -	
PLOT DATE = 3/20/2024	CHECKED - MZ	REVISED -	

STATE OF ILLINOIS
DEPARTMENT OF TRANSPORTATION

WEST ABUTMENT DIAPHRAGM
STRUCTURE NO. 045-0007

SHEET 16 OF 35 SHEETS

F.A.P. RTE.	SECTION	COUNTY	TOTAL SHEETS	SHEET NO.
345	FAP 345-23-BR	KANE	379	189
		CONTRACT NO. 62U83		
		ILLINOIS	FED. AID PROJECT	

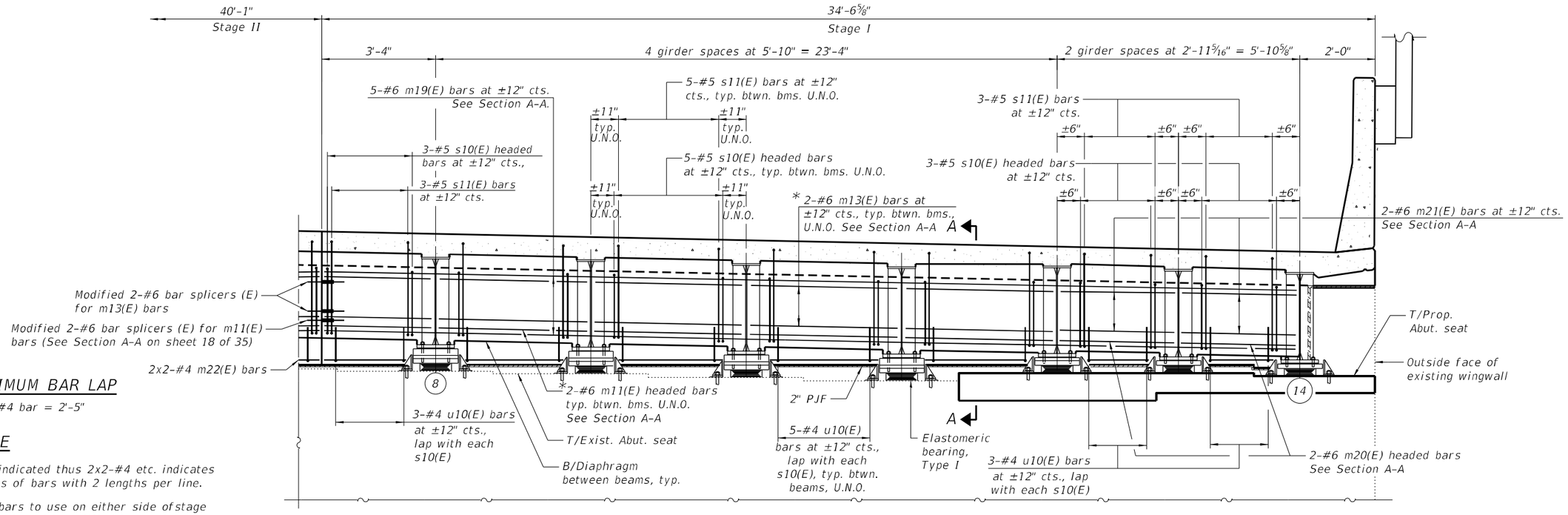

MINIMUM BAR LAP

#4 bar = 2'-5"

NOTE

Bars indicated thus 2x2-#4 etc. indicates 2 lines of bars with 2 lengths per line.

* Cut bars to use on either side of stage joint line with modified bar splicers.

DIAPHRAGM ELEVATION AT EAST ABUTMENT (STAGE I)

(Looking East)

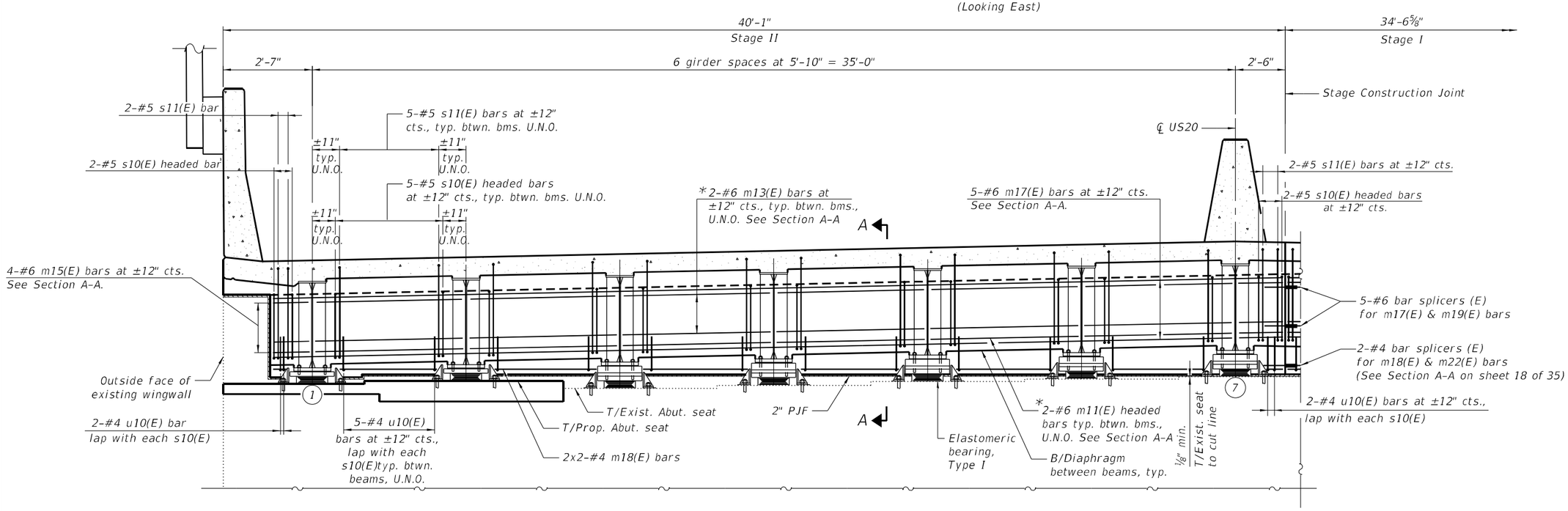

DIAPHRAGM ELEVATION AT EAST ABUTMENT (STAGE II)

(Looking East)

GANNETT FLEMING	USER NAME = jstarzyk	DESIGNED - SS	REVISED -	STATE OF ILLINOIS DEPARTMENT OF TRANSPORTATION	EAST ABUTMENT DIAPHRAGM STRUCTURE NO. 045-0007	F.A.P. RTE.	SECTION	COUNTY	TOTAL SHEETS / SHEET NO.
		CHECKED - MZ	REVISED -			345	FAP 345-23-BR	KANE	379 / 190
	PLOT SCALE =	DRAWN - LAM	REVISED -					CONTRACT NO. 62U83	
	PLOT DATE = 3/20/2024	CHECKED - MZ	REVISED -		SHEET 17 OF 35 SHEETS			ILLINOIS FED. AID PROJECT	

MODEL: Default
FILE NAME: pw://gfnet-pw.bentley.com:gfnet-pw-01/Documents/Projects/68096/Project Working/A_CADD/62U83-Contract1/Sheets/045-0007/0450007-62U83-017-D02.dgn

3/20/2024 4:40:00 PM

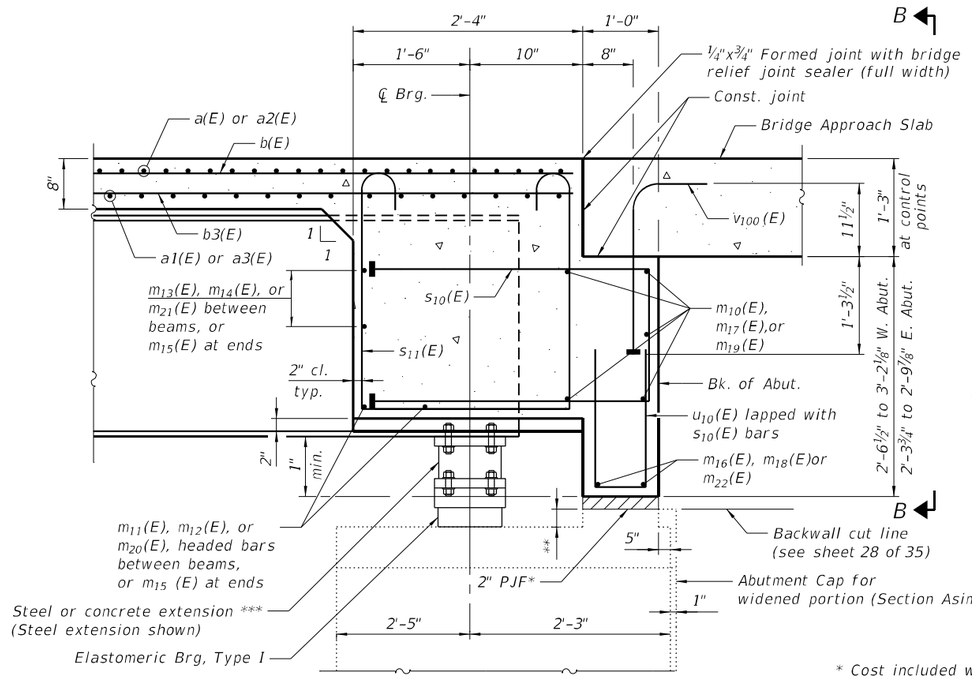

SECTION A-A

Dimensions at right angles to abutment, unless noted otherwise.
Section Asim depicts widened portion of abutment on either side of original construction showing difference in abutment cap and backwall widths.
See diaphragm corner detail for diaphram ends.

* Cost included with Concrete Superstructure

** Varies ⅝" to 1'-6" W. Abut. & ⅛" to 1'-6½" E. Abut.

*** If required, see sheet 25 of 35 .
Beams 1, 2, 12, 13 & 14 have concrete extensions

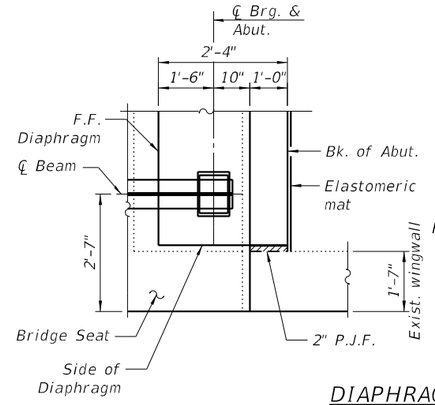

DIAPHRAGM CORNER DETAILS

(Typical each end of bridge)
(See sheet 12 of 35 for south edge of deck taper)
(Galvanized plate not shown for clarity)

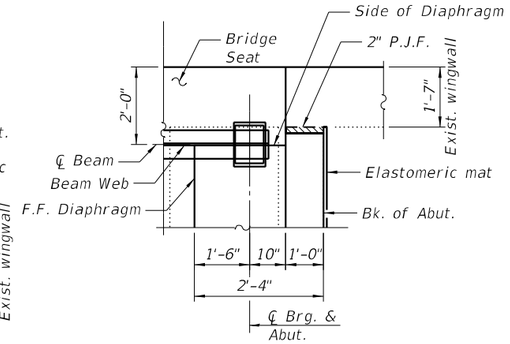

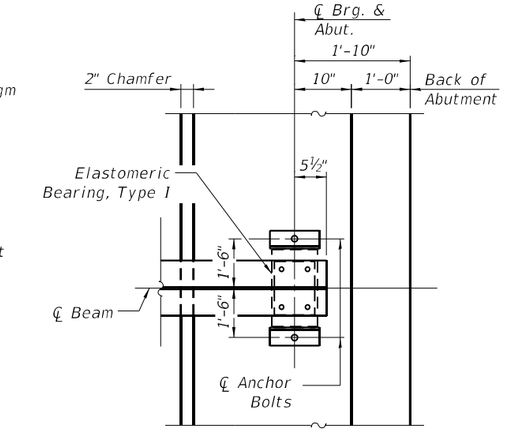

PLAN AT ABUTMENT

(Showing bottom flange of beam)
(See sheet 23 of 35 for beams 13 & 14 taper)

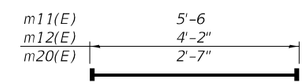

BAR m11(E), m12(E) or m20(E)

(Headed)
(88 - #6 Bar Terminators - m11(E))
(8 - #6 Bar Terminators - m12(E))
(8 - #6 Bar Terminators - m20(E))

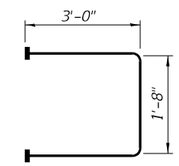

BAR s10(E)

(Headed)
(256 - #5 Bar Terminators)

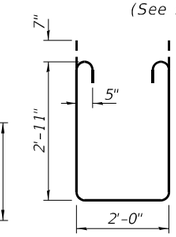

BAR s11(E)

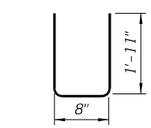

BAR u10(E)

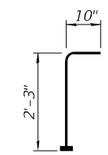

BAR v100(E)

(Headed)
(157 - #5 Bar Terminators)

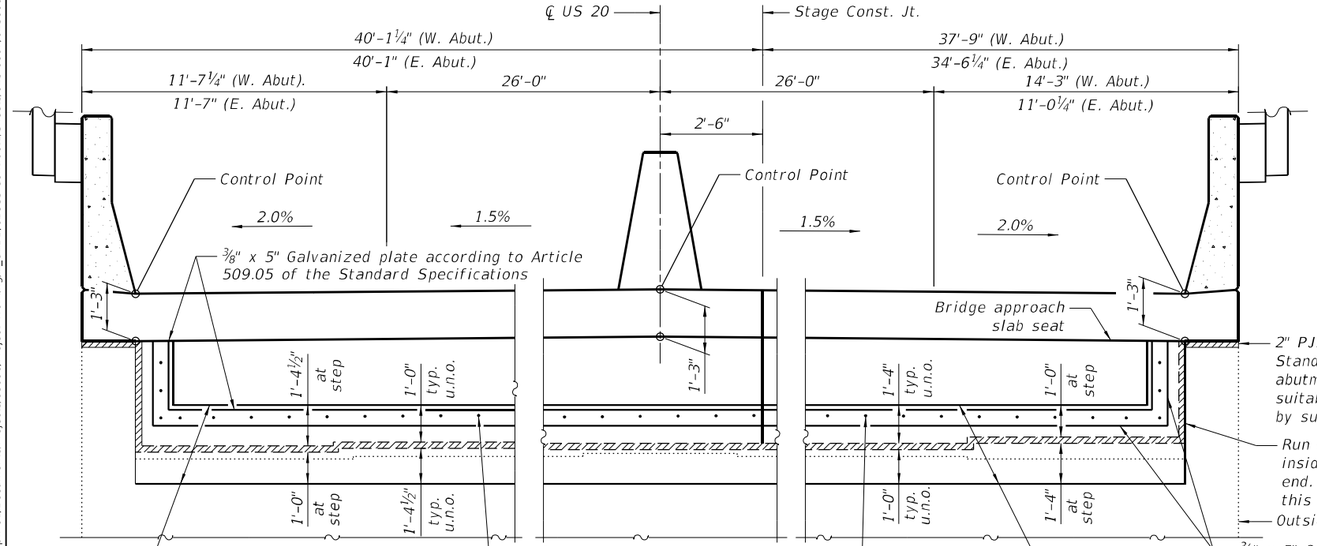

VIEW B-B

(Looking at back of W. Abut)
(Reflected view at back of E. Abut)

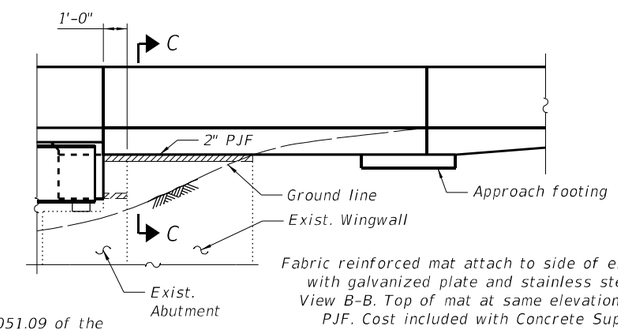

WINGWALL ELEVATION

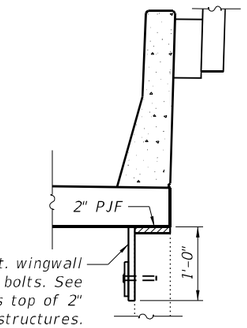

Fabric reinforced mat attach to side of exist. wingwall with galvanized plate and stainless steel bolts. See View B-B. Top of mat at same elevation as top of 2" PJF. Cost included with Concrete Superstructures.

SECTION C-C

Notes:

See sheet 15 of 35 for Bill of Material.

The s10(E) and s11(E), U10(E) and v100(E) bars shall be placed parallel to the beams. Spacing for these bars shall be at right angles to the beams.

The approach slab seat shall have a constant slope determined from the control points shown.

Cost of fabric reinforced elastomeric mat, galvanized plate, stainless steel expansion bolts with nuts and washers and installation are included in the cost of Concrete Superstructure.

See sheet 31 of 35 for concrete removal at back of abutment to permit installation of Elastomeric Mat at 2" PJF.

MODEL: Default
FILE NAME: pw://gfnet-pw.bentley.com:gfnet-pw-01/Documents/Projects/68096/Project Working/A_CADD/62U83-Contract1/Sheets/045-0007/0450007-62U83-018-DD3.dgn

3/20/2024 4:40:03 PM

GANNETT FLEMING

USER NAME = jstarzyk	DESIGNED - SS	REVISED -	
	CHECKED - MZ	REVISED -	
PLOT SCALE =	DRAWN - LAM	REVISED -	
PLOT DATE = 3/20/2024	CHECKED - MZ	REVISED -	

STATE OF ILLINOIS
DEPARTMENT OF TRANSPORTATION

ABUTMENT DIAPHRAGM DETAILS
STRUCTURE NO. 045-0007

SHEET 18 OF 35 SHEETS

F.A.P. RTE.	SECTION	COUNTY	TOTAL SHEETS	SHEET NO.
345	FAP 345-23-BR	KANE	379	190
		CONTRACT NO. 62U83		
		ILLINOIS	FED. AID PROJECT	

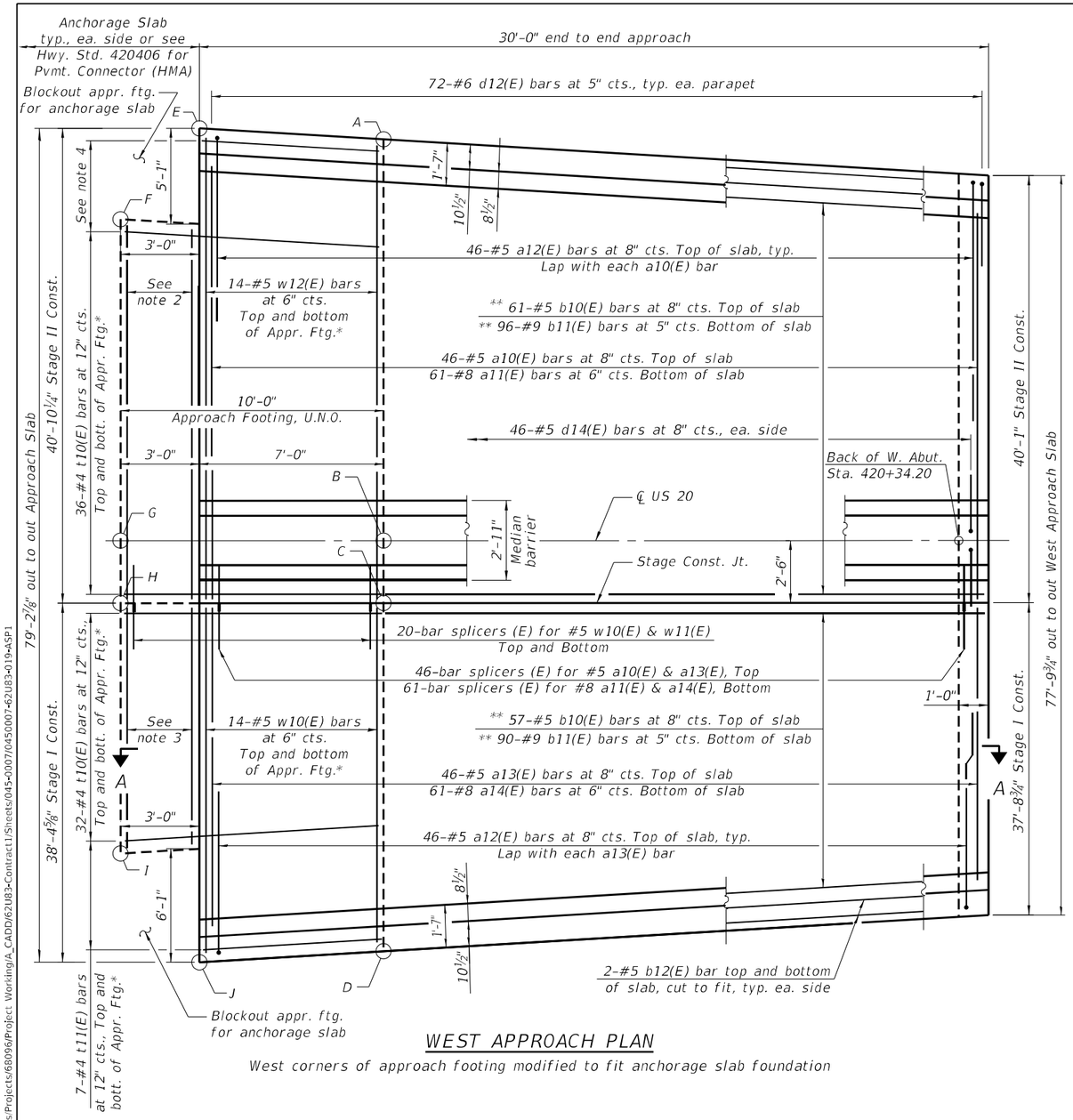

WEST APPROACH PLAN

West corners of approach footing modified to fit anchorage slab foundation

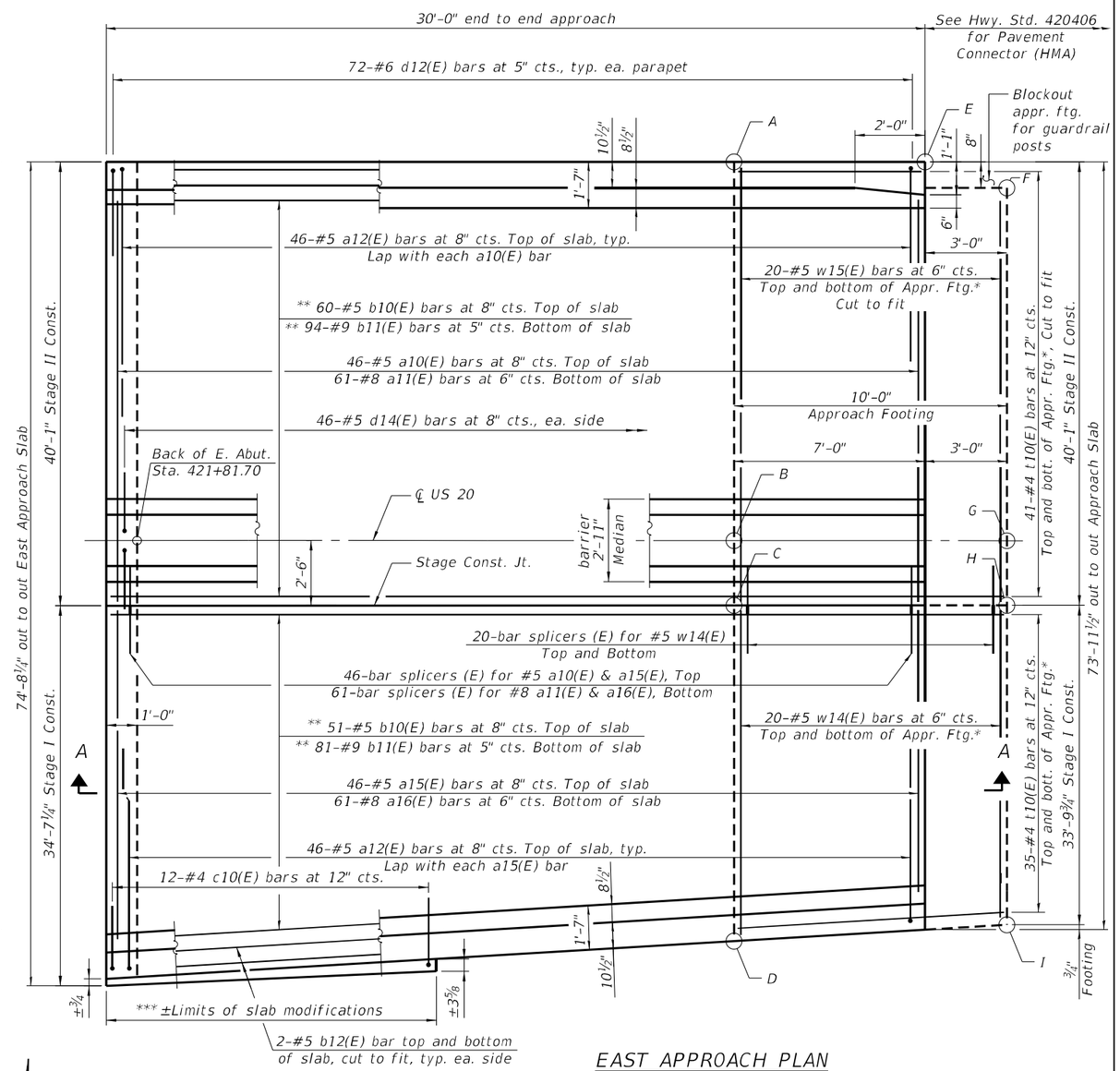

EAST APPROACH PLAN

NE corner of approach footing modified to fit guardrail posts

N

NOTES

1. For Section A-A see sheet 20 of 35.
2. Use 6-#5 w13(E) bars at 6" cts, Top and bottom of Appr. Ftg.*
3. Use 6-#5 w11(E) bars at 6" cts, Top and bottom of Appr. Ftg.*
4. Use 6-#4 t11(E) bars at 12" cts, Top and bottom of Appr. Ftg.*

* See Section A-A.

** Taper bars to fit.

*** See sheet 20 of 35 for south edge of approach slab modification details.

TOP AND BOTTOM ELEVATIONS FOR APPROACH FOOTING

West Approach			East Approach		
Point/ Location	Top	Bottom	Point/ Location	Top	Bottom
A - N. Edge of Appr.	750.49	749.66	A - N. Edge of Appr.	746.90	746.06
B - ℄ US 20	751.09	750.26	B - ℄ US 20	747.49	746.65
C - Stage Const. Jt.	751.05	750.22	C - Stage Const. Jt.	747.45	746.61
D - S. Edge of Appr.	750.41	749.57	D - S. Edge of Appr.	746.88	746.05
E - N. Edge of Appr.	750.58	749.75	E - N. Edge of Appr.	746.73	745.90
F - NW Appr. Ftg.	750.70	749.86	F - NE Appr. Ftg.	746.67	745.84
G - ℄ US 20	751.23	750.40	G - ℄ US 20	747.25	746.41
H - Stage Const. Jt.	751.19	750.36	H - Stage Const. Jt.	747.21	746.38
I - SW Appr. Ftg.	750.67	749.83	I - S. Edge of Appr.	746.65	745.82
J - S. Edge of Appr.	750.50	749.67			

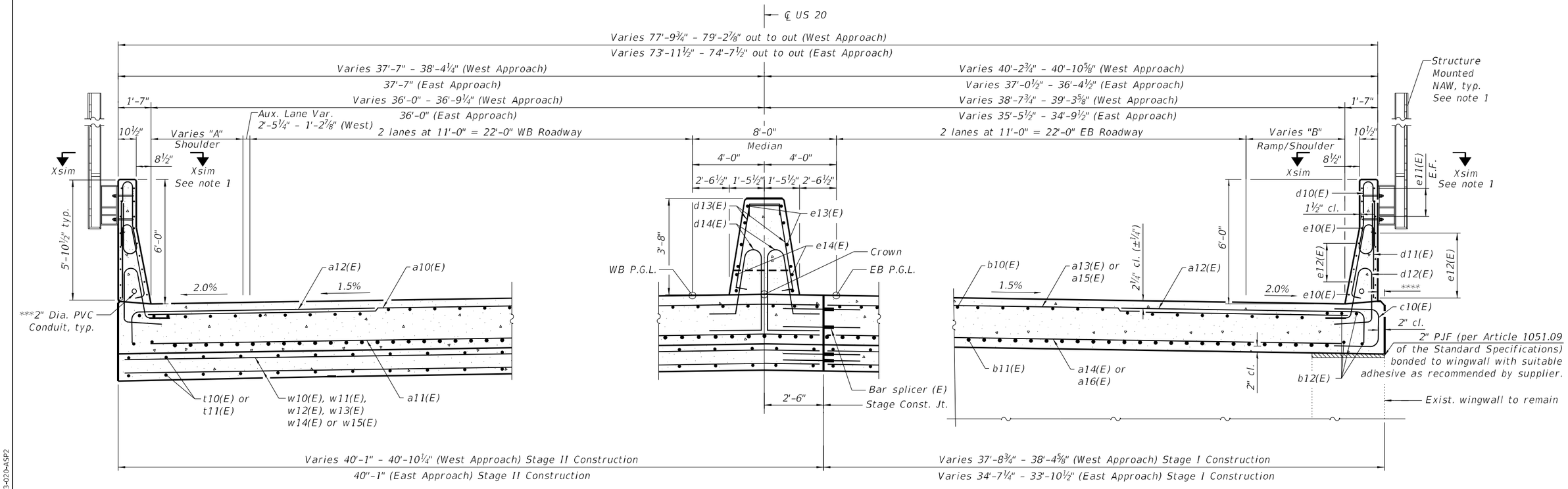

AT APPROACH FOOTING

NEAR ABUTMENT

CROSS SECTION

(Looking East)

See Approach Slab Plan for West/East Approach footing modifications

Location	Location	"A"
West Approach	West End	8'-4"
	East End	8'-9⅛"
East Approach	West End	10'-0"
	East End	10'-0"

Location	Location	"B"
West Approach	West End	13'-3⅝"
	East End	12'-7¾"
East Approach	West End	9'-5⅜"
	East End	8'-9½"

* Cost included with Concrete Superstructure (Approach Slab).

** Per manufacturer recommendations.

*** North and south parapet, see electrical plans. Maintain 1½" cl. from reinforcement.

**** Extend south edge of east approach slab to outside edge of existing wingwall. Extension width varies approx. ±¾" to ±3⅝".

NOTES

1. Contractor shall install NAW anchor rod assemblies and template plate for NAW anchor rod assembly. See sheet 14 of 35 for Section X-X, anchor rod and template details. Note spacing shall be as specified on sheet 21 of 35.

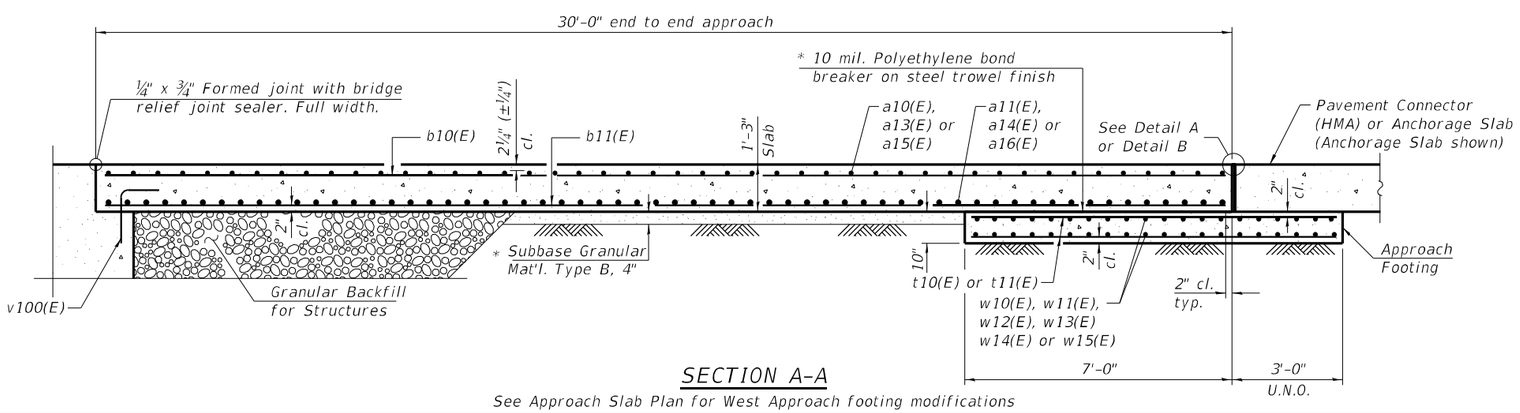

SECTION A-A

See Approach Slab Plan for West Approach footing modifications

*Expansion joint. See Special Provision "Preformed Pavement Joint Seal". Recess ¼" minimum. Run out to out of outside parapets and continuous thru median parapet. For W. Appr. adjacent to anchorage slab at outside parapet, turn up into parapet a minimum of 1-ft above finished pavement. At the HMA Pavement Connector interface, turn Preformed Pavement Joint Seal down 90 degrees for the full depth of concrete of the approach and anchorage slab.

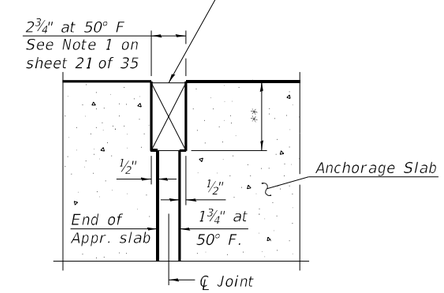

DETAIL A

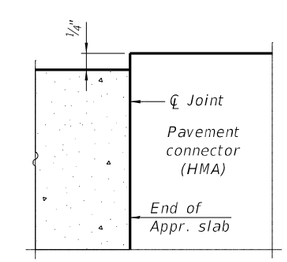

FLEXIBLE PAVEMENT

DETAIL B

GANNETT FLEMING	USER NAME = jstarzyk	DESIGNED - SS	REVISED -
		CHECKED - MZ	REVISED -
	PLOT SCALE = 2.0000 ' / in.	DRAWN - LAM	REVISED -
	PLOT DATE = 3/20/2024	CHECKED - MZ	REVISED -

STATE OF ILLINOIS
DEPARTMENT OF TRANSPORTATION

BRIDGE APPROACH SLAB SECTIONS
STRUCTURE NO. 045-0007

SHEET 20 OF 35 SHEETS

F.A.P. RTE.	SECTION	COUNTY	TOTAL SHEETS	SHEET NO.
345	FAP 345-23-BR	KANE	379	193

CONTRACT NO. 62U83

ILLINOIS | FED. AID PROJECT

MODEL: Default
FILE NAME: pw://gfnet-pw.bentley.com:gfnet-pw-01/Documents/Projects/68096/Project Working/A_CADD/62U83-Contract1/Sheets/045-0007/0450007-62U83-020-ASP2

3/20/2024 4:40:12 PM

Notes:
1. The joint opening shall be adjusted for temperature per Article 520.04 of the Standard Specifications. However, since this detail is for jointless structures, the length of bridge used to calculate the adjustment shall be equal to half the total bridge length plus the length of the bridge approach slab.
2. Parapet and median barrier concrete shall be paid for as Concrete Superstructure.
3. Approach slab shall be paid for as Concrete Superstructure (Approach Slab).
4. Approach footing concrete shall be paid for as Concrete Structures.
5. The approach footing maximum applied service bearing pressure (Qmax) = 2.0 ksf.
6. Cost of excavation for approach footing included with Concrete Structures.
7. For Granular Backfill for Structures and drainage treatment details, see sheet 31 of 35.
8. See sheets 14 & 15 of 35 for joint details.

* For east approach only.

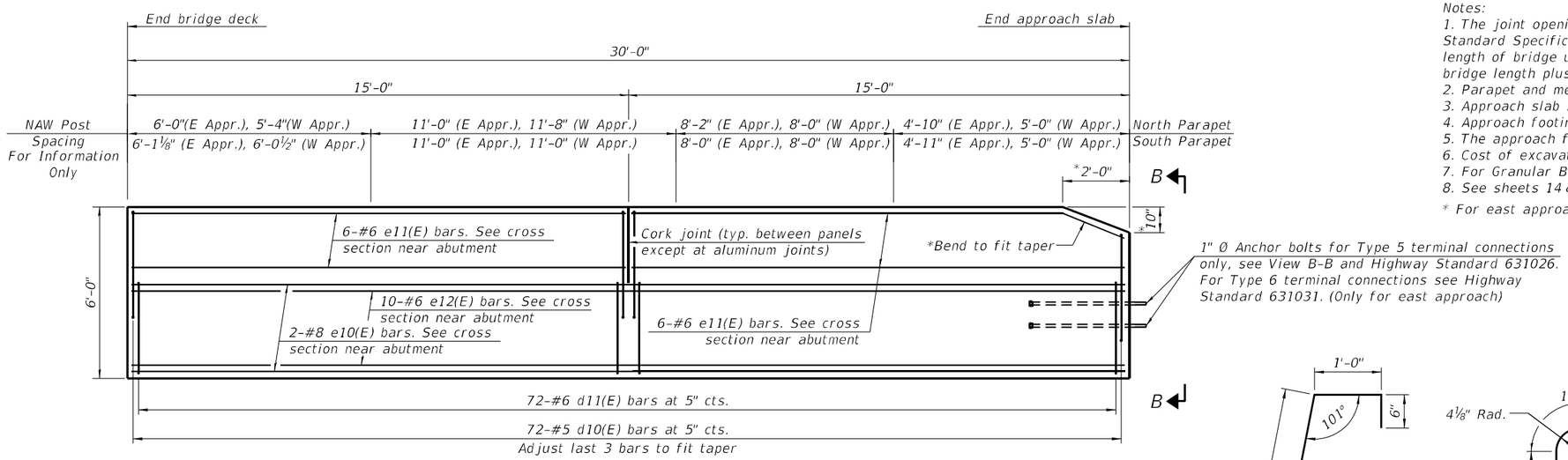

INSIDE ELEVATION OF PARAPET

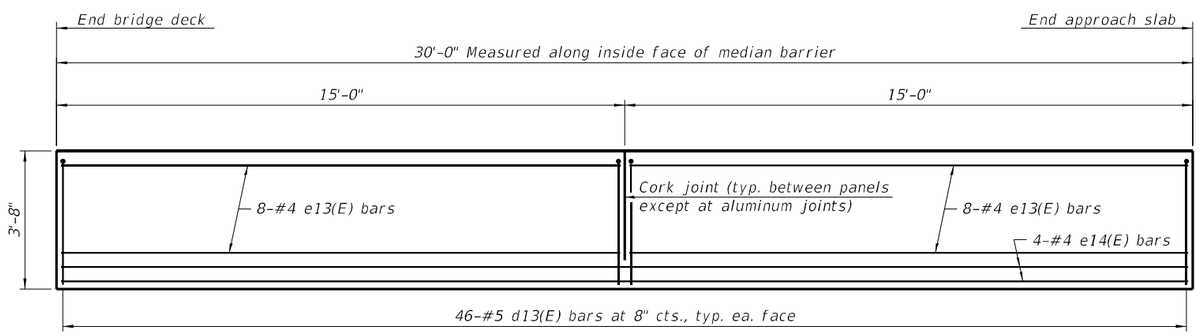

INSIDE ELEVATION OF MEDIAN BARRIER

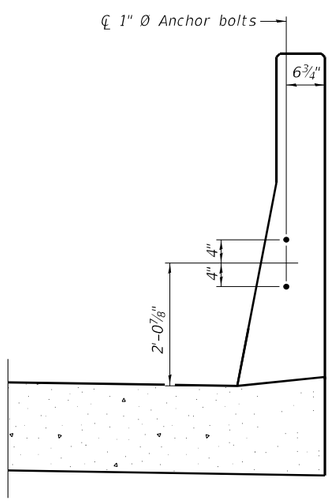

VIEW B-B

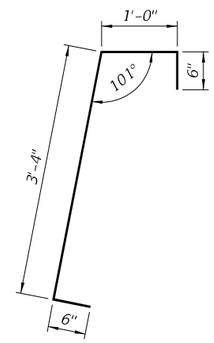

BAR d13(E)

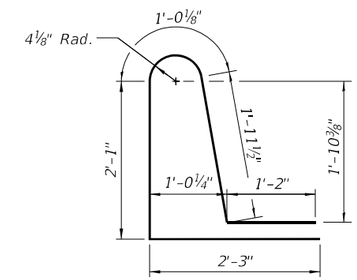

BAR d14(E)

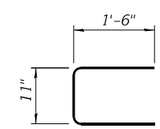

BAR c10(E)

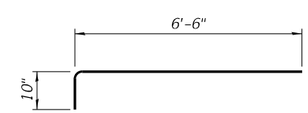

BAR a12(E)

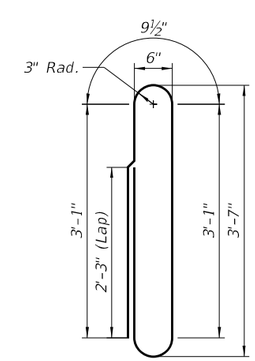

BAR d10(E)

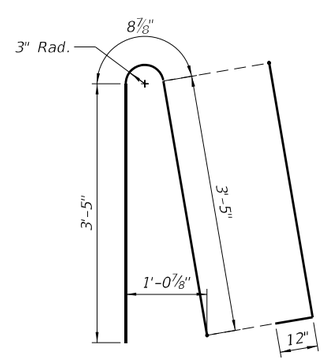

BAR d11(E)

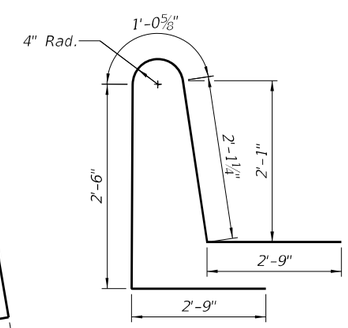

BAR d12(E)

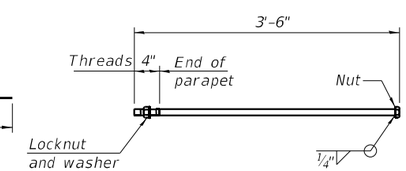

1" Ø ANCHOR BOLT

(Anchor bolt assemblies shall be galvanized according to Article 1006.09 of the Standard Specifications. Cost included with Concrete Superstructure (Approach Slab))

TWO APPROACHES BILL OF MATERIAL

Bar	No.	Size	Length	Shape
a10(E)	92	#5	39'-9"	
a11(E)	122	#8	39'-9"	
a12(E)	184	#5	7'-4"	
a13(E)	46	#5	37'-3"	
a14(E)	61	#8	37'-3"	
a15(E)	46	#5	33'-5"	
a16(E)	61	#8	33'-5"	
b10(E)	229	#5	29'-8"	
b11(E)	361	#9	29'-8"	
b12(E)	16	#5	29'-8"	
c10(E)	12	#4	3'-11"	
d10(E)	288	#5	10'-0"	
d11(E)	288	#6	8'-7"	
d12(E)	288	#6	11'-2"	
d13(E)	184	#5	5'-4"	
d14(E)	184	#5	8'-6"	
e10(E)	8	#8	29'-8"	
e11(E)	48	#6	14'-8"	
e12(E)	40	#6	29'-8"	
e13(E)	32	#4	14'-8"	
e14(E)	8	#4	29'-8"	
w10(E)	28	#5	37'-10"	
w11(E)	12	#5	31'-9"	
w12(E)	28	#5	40'-6"	
w13(E)	12	#5	35'-5"	
w14(E)	40	#5	33'-4"	
w15(E)	40	#5	39'-9"	
t10(E)	288	#4	9'-8"	
t11(E)	26	#4	6'-8"	
Concrete Structures			Cu. Yd.	46.3
Concrete Superstructure			Cu. Yd.	46.6
Bridge Deck Grooving			Sq. Yd.	484
Protective Coat			Sq. Yd.	663
Concrete Superstructure (Approach Slab)			Cu. Yd.	213.4
Reinforcement Bars, Epoxy Coated			Pound	102,490
Noise Abatement Wall Anchor Rod Assembly			Each	12

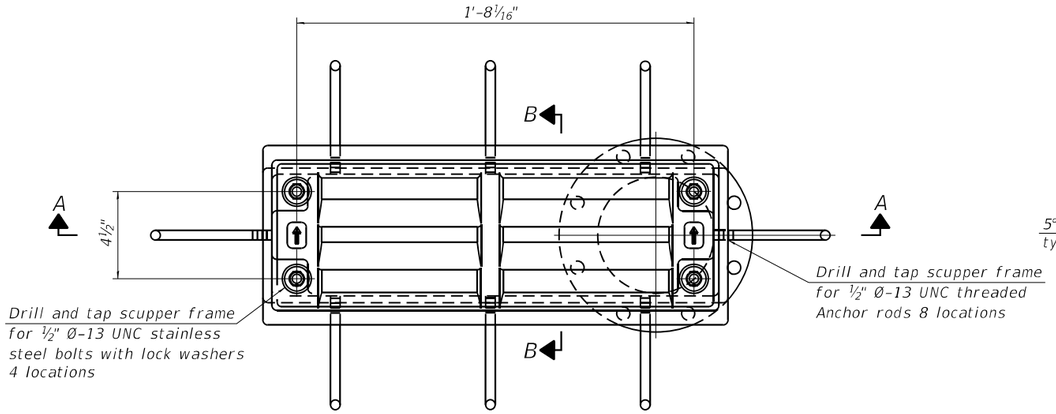

PLAN

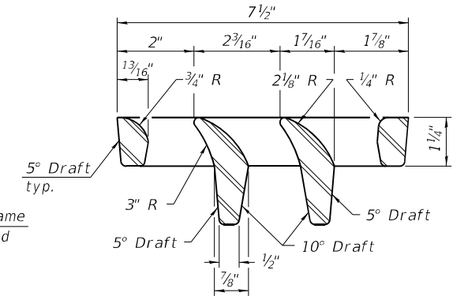

VANE GRATE DETAIL

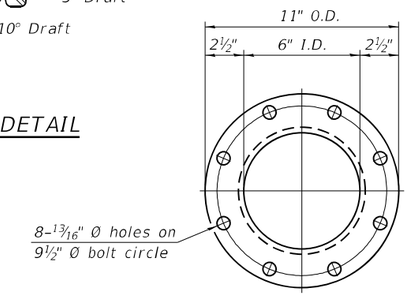

Notes:

All cast iron parts shall be gray iron conforming to the requirements of AASHTO M105, Class 35B and AASHTO M306.

Bolts, anchor rods, nuts and washers shall be according to ASTM A307 and shall be galvanized according to AASHTO M232. As an alternate stainless steel may be used.

Stainless steel hardware shall be according to Article 1006.29(d) of the Standard Specifications.

Structural steel weldments of equal sections and of the same configuration may be substituted for the cast iron scupper frames and downspouts; however, the scupper grates shall remain cast iron. Fillet or full penetration welds shall be used for the weldments. Details shall be submitted to the Engineer for approval.

Structural steel scupper frames and downspouts, when utilized, shall be galvanized according to AASHTO M111.

As an alternate, fiberglass may be used for downspouts according to ASTM D2996 with a short-time rupture strength hoop tensile stress of 30,000 psi min. in lieu of the cast iron or structural steel.

Exterior surfaces of downspouts and exterior exposed surfaces of the scupper frame below deck shall be pigmented or painted to match the color of the adjacent beam.

The Contractor shall take appropriate measures to assure that Protective Coat is not applied to the scupper.

Cost of the grate, frame, downspout, anchor rods, nuts and washers including complete installation of the scupper shall be paid for at the contract unit price for Drainage Scuppers, DS-12.

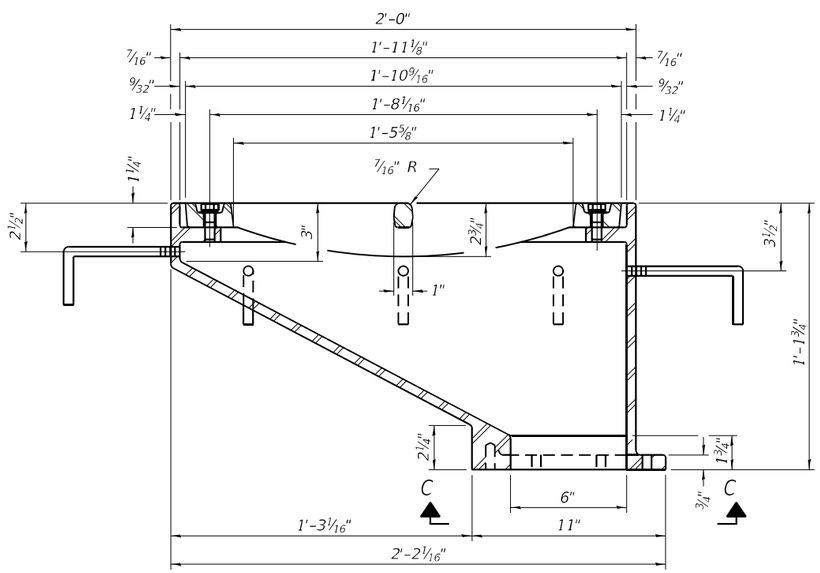

SECTION A-A

See sheet 14 of 35 for scupper location relative to parapet.

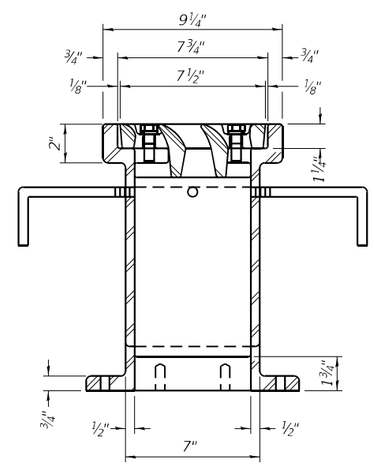

SECTION B-B

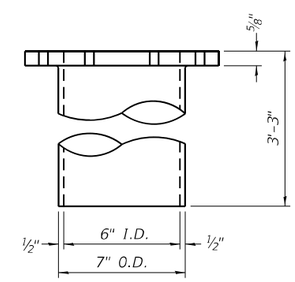

DOWNSPOUT

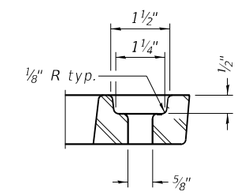

GRATE BOLT HOLE DETAIL

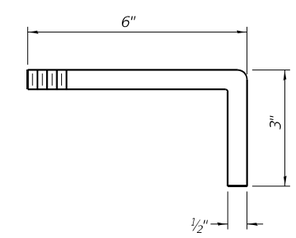

ANCHOR ROD DETAIL

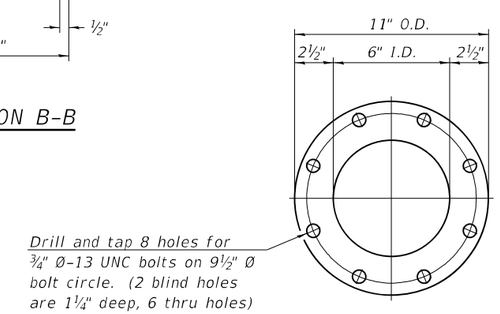

VIEW C-C

BILL OF MATERIAL

ITEM	UNIT	QUANTITY
Drainage Scuppers, DS-12	Each	4

DS-12 2-1-2023

USER NAME = jstarzyk	DESIGNED - MDA	REVISED -	STATE OF ILLINOIS DEPARTMENT OF TRANSPORTATION
	CHECKED - MZ	REVISED -	
PLOT SCALE =	DRAWN - MDA	REVISED -	
PLOT DATE = 3/20/2024	CHECKED - MZ	REVISED -	

GANNETT FLEMING

DRAINAGE SCUPPERS, DS-12
STRUCTURE NO. 045-0007

SHEET 22 OF 35 SHEETS

F.A.P. RTE.	SECTION	COUNTY	TOTAL SHEETS	SHEET NO.
345	FAP 345-23-BR	KANE	379	195
		CONTRACT NO. 62U83		
		ILLINOIS	FED. AID PROJECT	

MODEL: Default
FILE NAME: pw://gfnet-pw.bentley.com:gfnet-pw01/Documents/Projects/68096/Project Working/A_CADD/62U83-Contract1/Sheets/045-0007/0450007-62U83-022-DS.dgn
3/20/2024 4:40:20 PM

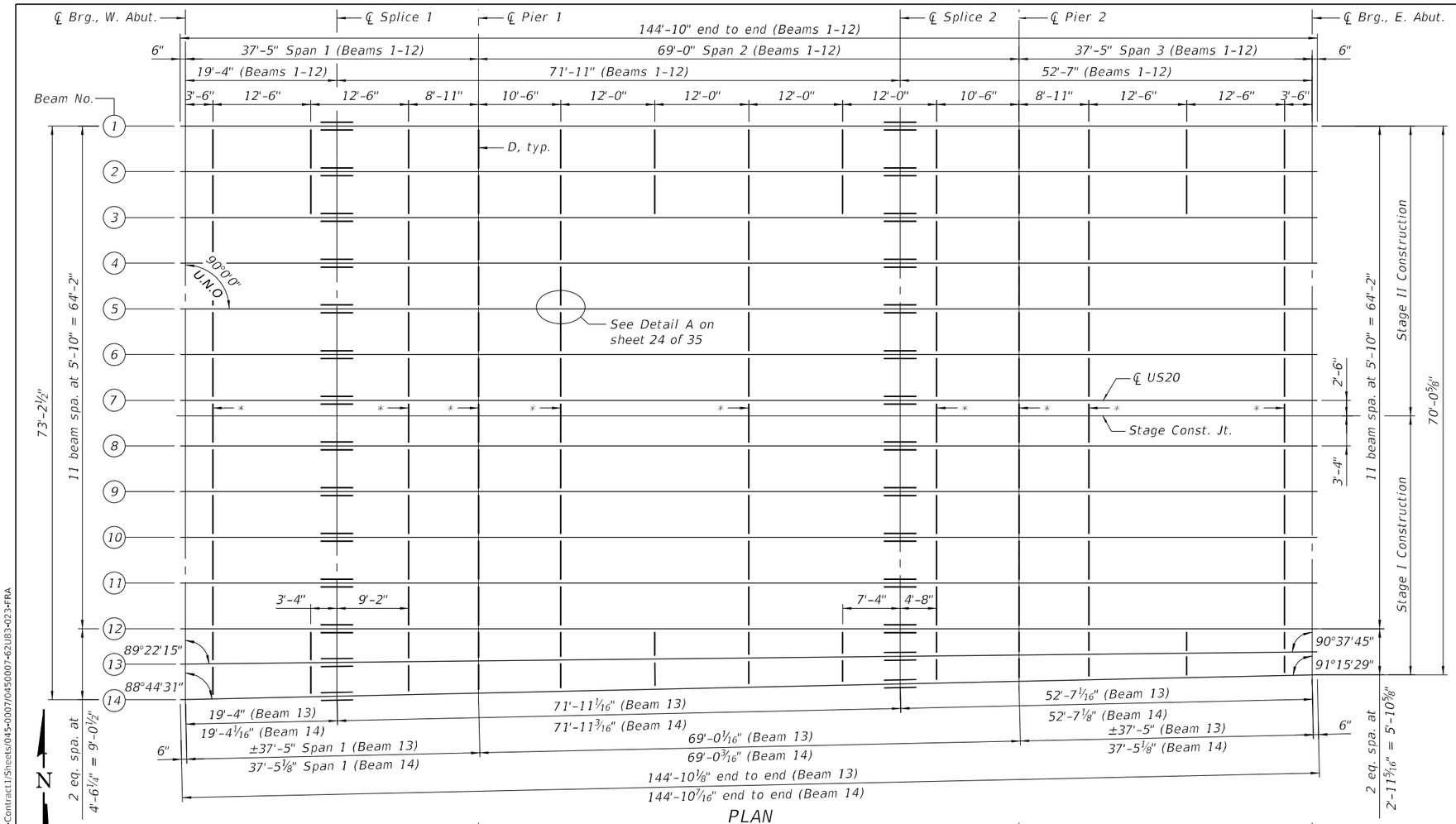

PLAN

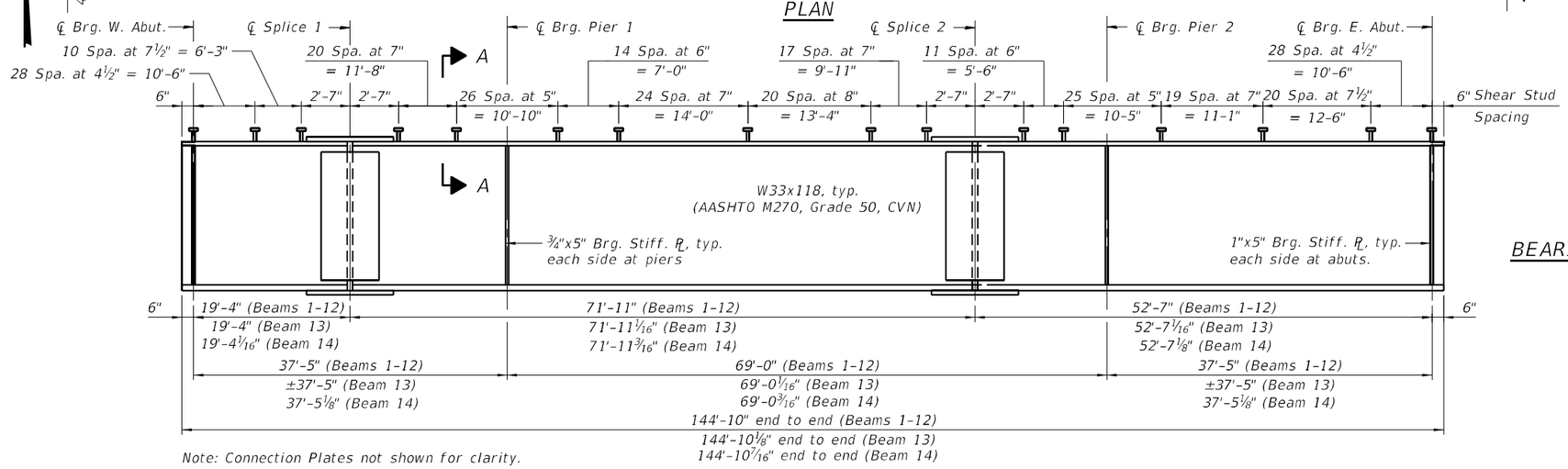

Note: Connection Plates not shown for clarity.

BEAM ELEVATION

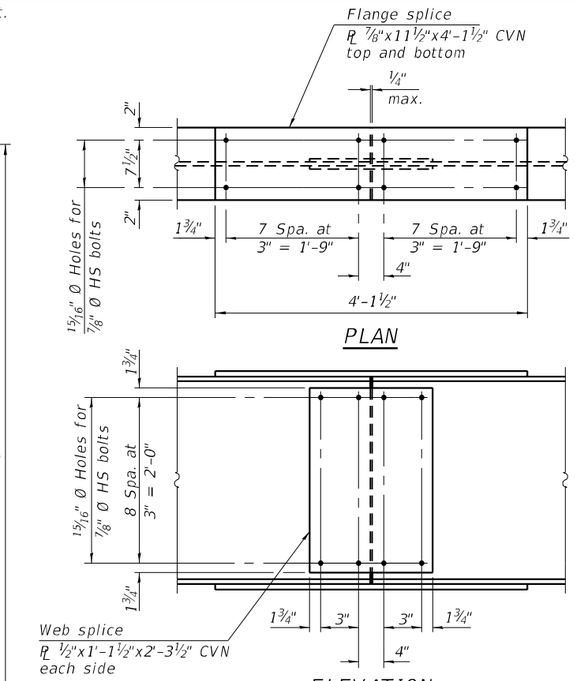

* Use 13⁄16" x 1⅞" vert. long-slotted holes in one end of the diaphragm (adjacent to Beam 7) and standard oversize holes at the other end (adjacent to Beam 8) and in the connection plates at locations designated with (*) only. The bolts for the slotted holes shall be finger tightened prior to the deck pour for Stage II Construction. Tighten bolts after deck is poured. Position slots so bolts start at one end of slotted holes before the Stage II concrete is poured and finish near the opposite end after the Stage II pour. See detail on sheet 24 of 35 .

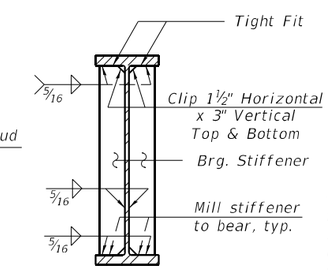

BEARING STIFFENER DETAIL

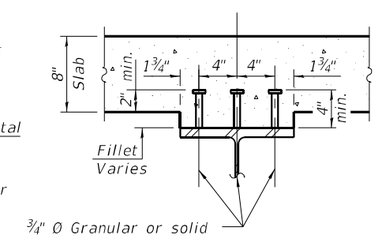

¾" Ø Granular or solid flux filled headed studs, automatically end welded to flange. (No. Required = 11,130)

SECTION A-A

Notes:

1. See sheet 24 of 35 for additional notes and details.
2. All diaphragms shall be installed as steel is erected and secured with erection pins and bolts except as otherwise noted. Individual diaphragms at supports may be temporarily disconnected to install bearing anchor rods.
3. CVN denotes Charpy-V-Notch impact energy requirements, zone 2.

MODEL: Default
FILE NAME: pw://gfnet-pw.bentley.com:gfnet-pw01/Documents/Projects/68096/Project Working/A_CADD/62U83-Contract1/Sheets/045-0007/0450007-62U83-023-FRA
3/20/2024 4:40:24 PM

GANNETT FLEMING

USER NAME = jstarzyk	DESIGNED - MZ	REVISED -	
	CHECKED - SS	REVISED -	
PLOT SCALE =	DRAWN - LAM	REVISED -	
PLOT DATE = 3/20/2024	CHECKED - MZ	REVISED -	

STATE OF ILLINOIS
DEPARTMENT OF TRANSPORTATION

FRAMING PLAN
STRUCTURE NO. 045-0007
SHEET 23 OF 35 SHEETS

F.A.P. RTE.	SECTION	COUNTY	TOTAL SHEETS	SHEET NO.
345	FAP 345-23-BR	KANE	379	196
		CONTRACT NO. 62U83		
		ILLINOIS FED. AID PROJECT		

INTERIOR GIRDER MOMENT TABLE				
		0.26 Sp. 1 or 0.74 Sp. 3	Pier	0.5 Sp. 2
I_s	(in^4)	5,900	5,900	5,900
$I_c(n)$	(in^4)	16,811	–	16,811
$I_c(3n)$	(in^4)	12,514	–	12,514
$I_c(cr)$	(in^4)	–	8,288	–
S_s	(in^3)	359	359	359
$S_c(n)$	(in^3)	544	–	544
$S_c(3n)$	(in^3)	493	–	493
$S_c(cr)$	(in^3)	–	421	–
S_x	(in^3)	537	408	507
DC1	(k/')	0.74	0.74	0.74
M_{DC1}	('k)	35	250	190
DC2	(k/')	0.72	0.72	0.72
M_{DC2}	('k)	34	242	184
DW	(k/')	0.29	0.29	0.29
M_{DW}	('k)	14	99	75
LLDF		0.600	0.564	0.539
M_{LL+IM}	('k)	342	466	498
f_f (Strength I)	(ksi)	–	–	–
$M_u + \frac{1}{3} f_f S_x$	('k)	712	1,579	1,452
$\phi_f M_n$	('k)	2,893	2,124	2,742
f_s DC1	(ksi)	1.17	8.36	6.36
f_s DC2	(ksi)	0.83	6.90	4.48
f_s DW	(ksi)	0.45	2.82	1.83
f_s ($_{LL}$+IM)	(ksi)	7.5	13.3	11.0
$f_s + \frac{f_f}{2}$ (Service II)	(ksi)	12.3	35.4	26.9
Service II Resistance	(ksi)	47.5	47.5	47.5
$f_s + \frac{f_f}{3}$ (Strength I)	(ksi)	–	–	–
$\phi_f F_n$	(ksi)	–	–	–
V_f	(k)	45.7	54.9	33.7

GIRDER REACTION TABLE			
		W. & E. Abut.	Pier 1 & 2
LLDF		0.658	0.658
OCF		1.00	–
R_{DC1}	(k)	13.1	46.4
R_{DC2}	(k)	6.9	44.6
R_{DW}	(k)	2.8	18.2
R_{LL}	(k)	41.3	73.3
R_{Im}	(k)	11.4	15.3
R_{Total} (Strength I)(Impact)	(k)	121.5	295.9
R_{Total} (Strength I)(No Impact)	(k)	101.5	269.2

I_s, S_s : Non-composite moment of inertia and section modulus of the steel section used for computing f_s(Total-Strength I, and Service II) due to non-composite dead loads ($in.^4$ and $in.^3$).

$I_c(n)$, $S_c(n)$: Composite moment of inertia and section modulus of the steel and deck based upon the modular ratio, "n", used for computing f_s(Total-Strength I, and Service II) in uncracked sections due to short-term composite live loads ($in.^4$ and $in.^3$).

$I_c(3n)$, $S_c(3n)$: Composite moment of inertia and section modulus of the steel and deck based upon 3 times the modular ratio, "3n", used for computing f_s(Total-Strength I, and Service II) in uncracked sections, due to long-term composite (superimposed) dead loads ($in.^4$ and $in.^3$).

$I_c(cr)$, $S_c(cr)$: Composite moment of inertia and section modulus of the steel and longitudinal deck reinforcement, used for computing f_s (Total-Strength I and Service II) in cracked sections, due to both short-term composite live loads and long-term composite (superimposed) dead loads ($in.^4$ and $in.^3$).

S_x : Section modulus about the major axis of the section to the controlling flange, tension or compression, taken as yield moment with respect to the controlling flange over the yield strength of the controlling flange ($in.^3$).

DC1: Un-factored non-composite dead load (kips/ft.).

M_{DC1} : Un-factored moment due to non-composite dead load (kip-ft.).

DC2: Un-factored long-term composite (superimposed excluding future wearing surface) dead load (kips/ft.).

M_{DC2} : Un-factored moment due to long-term composite (superimposed excluding future wearing surface) dead load (kip-ft.).

DW: Un-factored long-term composite (superimposed future wearing surface only) dead load (kips/ft.).

M_{DW} : Un-factored moment due to long-term composite (superimposed future wearing surface only) dead load (kip-ft.).

LLDF: Live Load Distribution Factor for moment and shear computed according to Article 4.6.2.2 and further IDOT provisions.

M_{LL+IM}: Un-factored live load moment plus dynamic load allowance (impact) (kip-ft.).

f_f: Factored calculated flange lateral bending stress as calculated using Article 6.10.1.6 and as further simplified by IDOT provisions (ksi).

M_u : Strength I load combination of factored design moments (kip-ft.).
$1.25\ (M_{DC1} + M_{DC2}) + 1.5\ M_{DW} + 1.75\ M_{LL+IM}$

$\phi_f M_n$: Factored nominal flexural resistance of the section determined as specified in Article 6.10.7.1 or A6 as applicable (kip-ft.).

f_s DC1: Un-factored stress at edge of flange for controlling steel flange due to vertical non-composite dead loads as calculated below (ksi).
M_{DC1} / S_s

f_s DC2: Un-factored stress at edge of flange for controlling steel flange due to vertical composite dead loads as calculated below (ksi).
$M_{DC2} / S_c(3n)$ or $M_{DC2} / S_c(cr)$ as applicable.

f_s DW: Un-factored stress at edge of flange for controlling steel flange due to vertical composite future wearing surface loads as calculated below (ksi).
$M_{DW} / S_c(3n)$ or $M_{DW} / S_c(cr)$ as applicable.

f_s ($_{LL}$ + IM): Un-factored stress at edge of flange for controlling steel flange due to vertical composite live load plus impact loads as calculated below (ksi).
$M_{LL+IM} / S_c(n)$ or $M_{LL+IM} / S_c(cr)$ as applicable.

$f_s + f_f/2$ (Service II): Sum of stresses as computed below (ksi).
f_s DC1 + f_s DC2 + f_s DW + 1.3 f_s ($_{LL}$ + IM) + $f_f/2$

Service II Resistance: Composite ($0.95R_hF_{yf}$) or noncomposite ($0.80R_hF_{yf}$) stress capacity according to Article 6.10.4.2 (ksi).

$f_s + f_f/3$ (Strength I): Sum of stresses as computed below on non-compact sections (ksi).
1.25 (f_s DC1 + f_s DC2) + 1.5 f_s DW + 1.75 f_s ($_{LL}$ + IM) + $f_f/3$

$\phi_f F_n$: Factored nominal flexural resistance of the section as specified in Article 6.10.7.2 or 6.10.8 as applicable (ksi).

V_f: Maximum factored shear range in span computed according to Article 6.10.10.

OCF: Obtuse Correction Factor according to Article 4.6.2.2.3c or as further simplified by IDOT provisions.

R_{DC1} : Un-factored reaction due to non-composite dead load (kip).

R_{DC2} : Un-factored reaction due to long-term composite (superimposed excluding future wearing surface) dead load (kip).

R_{DW} : Un-factored reaction due to long-term composite (superimposed future wearing surface only) dead load (kip).

R_{LL} : Un-factored live load reaction (kip).

R_{IM} : Un-factored dynamic load allowance (impact) (kip).

R_{Total} (Strength I)(Impact): Strength I load combination of factored design reactions (kip).
1.25 ($R_{DC1} + R_{DC2}$) + 1.5R_{DW} + 1.75 ($R_{LL} + R_{IM}$)

R_{Total} (Strength I)(No Impact): Strength I load combination of factored design reactions, not including dynamic load allowance (Impact) (kip).
1.25 ($R_{DC1} + R_{DC2}$) + 1.5R_{DW} + 1.75 (R_{LL})

**Top of Beam Elevations						
Beam No.	℄ Brg. W. Abut.	℄ Splice 1	℄ Pier 1	℄ Splice 2	℄ Pier 2	℄ Brg. E. Abut.
1	750.45	750.08	749.74	748.74	748.45	747.74
2	750.82	750.44	750.11	749.11	748.82	748.11
3	750.92	750.55	750.21	749.21	748.92	748.22
4	751.01	750.63	750.30	749.30	749.01	748.31
5	751.10	750.72	750.39	749.38	749.10	748.39
6	751.19	750.81	750.48	749.48	749.19	748.48
7	751.27	750.90	750.56	749.55	749.27	748.56
8	751.19	750.81	750.48	749.48	749.19	748.48
9	751.10	750.72	750.39	749.38	749.10	748.39
10	751.01	750.63	750.30	749.30	749.01	748.31
11	750.92	750.55	750.21	749.21	748.92	748.22
12	750.82	750.44	750.11	749.11	748.82	748.11
13	750.73	750.35	750.02	749.02	748.73	748.02
14	750.39	750.01	749.68	748.68	748.39	747.69

** For fabrication only.

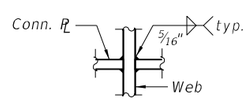

WEB WELD DETAIL

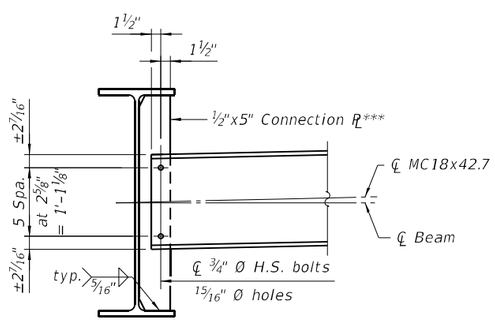

INTERIOR DIAPHRAGM - D

(133 Required)

***Brg. Stiff. shall be used in lieu of Connection PL at piers

**** See note (*) on sheet 23 of 35, and Diaphragm Slotted Hole Detail this sheet.

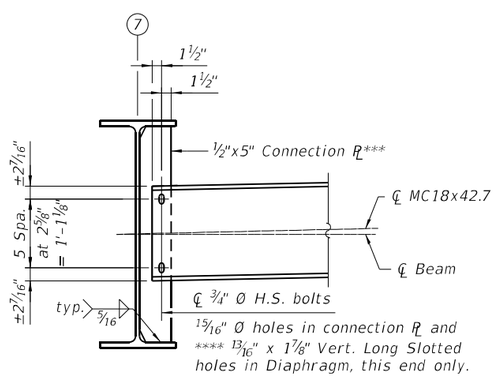

DIAPHRAGM SLOTTED HOLE DETAIL

(Along Construction Line)

*** Brg. Stiff. shall be used in lieu of Connection PL at piers

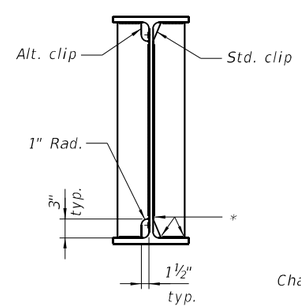

WELD LIMITS AND CLIP DETAILS

* Stop welds ¼" (±⅛") from edges as shown, typ.

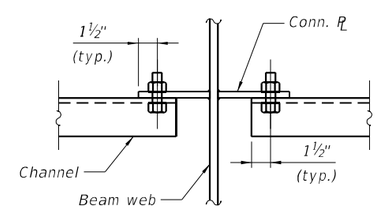

DETAIL A

See sheet 23 of 35 for location.

Notes:

1. All primary structural steel members, bearing stiffener plates and splice plates shall be AASHTO M270, Grade 50.
2. Two hardened washers required for each set of oversized holes.
3. Alternate channels of equal depth and larger weight are permitted to facilitate material acquisition. Alternate channels if utilized, shall be provided at no additional cost to the Department.

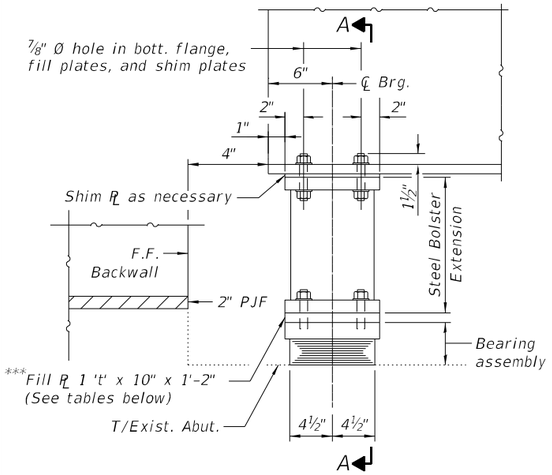

ELEVATION

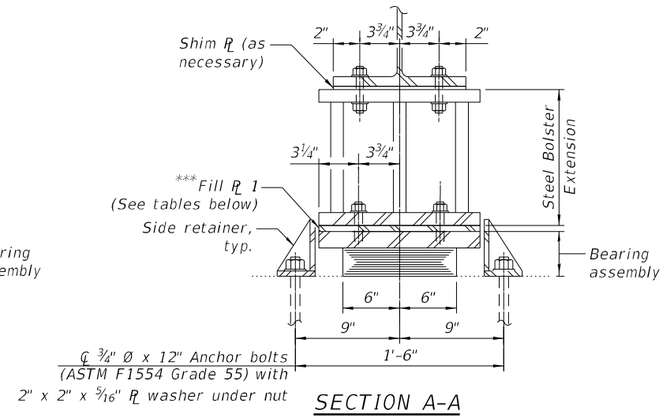

SECTION A-A

TYPE I ELASTOMERIC EXP. BRG.

(Beams 3 thru 11)

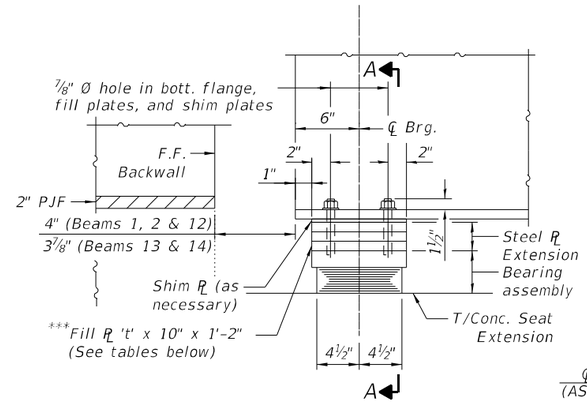

ELEVATION

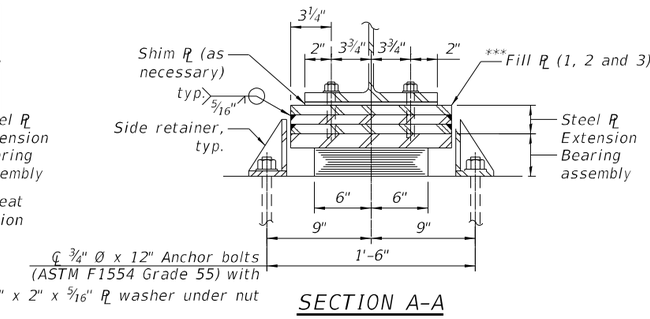

SECTION A-A

TYPE I ELASTOMERIC EXP. BRG.

(Beams 2, 12 & 13)

(Beams 1 & 14 similar, see East Abutment Type I Elastomeric Expansion Detail for Beams 1 & 14 on sheet 26 of 35 for fill plate details without steel plate extensions)

BILL OF MATERIAL

Item	Unit	Total
Elastomeric Bearing Assembly Type I	Each	14
Anchor Bolts, ¾"	Each	28

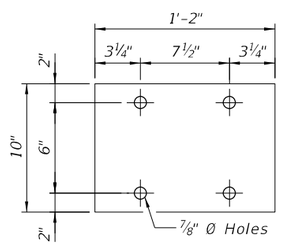

PLAN FILL PL

(Shim PL similar if required)

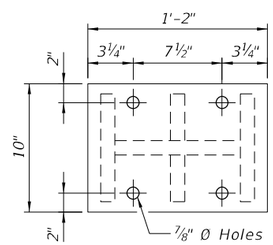

PLAN TOP PL

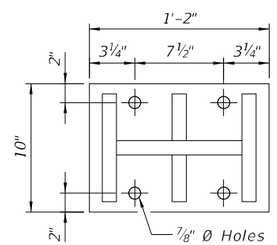

PLAN BOTTOM PL

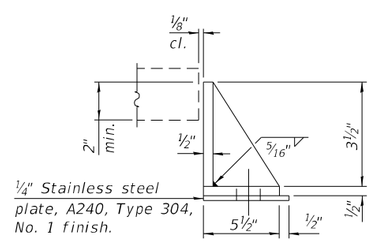

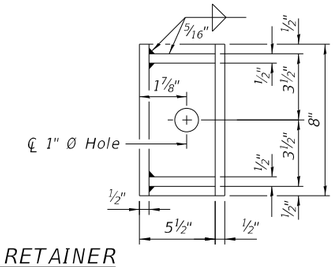

SIDE RETAINER

Equivalent rolled angle with stiffeners will be allowed in lieu of welded plates.
(22 req'd)

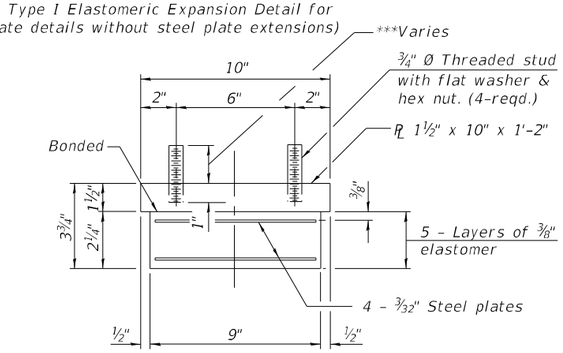

BEARING ASSEMBLY

Note:
Shim plates shall not be placed under bearing assembly.

*** See West Abutment Extension & Fill PL Dimensions tables.

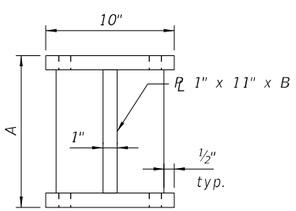

SECTION B-B

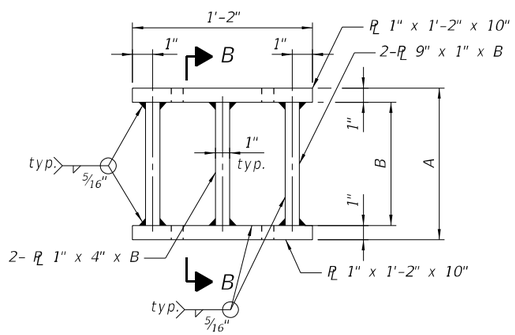

ELEVATION

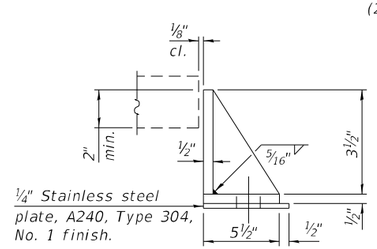

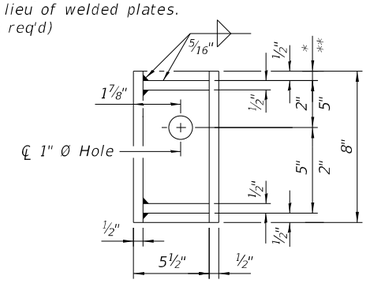

MODIFIED SIDE RETAINER

(at Beams 2, 3, 11 & 12)

Equivalent rolled angle with stiffeners will be allowed in lieu of welded plates. See sheets 29 & 30 of 35 for locations.
(6 req'd)

* Beams 2, 11 & 12 south side of brg.

** Beams 2, 3 & 12 north side of brg.

***WEST ABUTMENT EXTENSION & FILL PL DIMENSIONS

	BM 1	BM 2	BM 3	BM 4	BM 5	BM 6	BM 7	BM 8	BM 9	BM 10	BM 11	BM 12	BM 13	BM 14
Fill Plate 1 't'	¾"	2"	⅜"	–	⅛"	⅛"	¼"	⅝"	⅝"	⅝"	⅝"	2"	2"	–
Fill Plate 2 't'	–	2"	–	–	–	–	–	–	–	–	–	2"	2"	–
Fill Plate 3 't'	–	1¼"	–	–	–	–	–	–	–	–	–	1¼"	–	–
Bolster Dim. 'A'	–	–	8"	9"	9"	10"	10"	10"	9"	9"	8"	–	–	–
Bolster Dim. 'B'	–	–	6"	7"	7"	8"	8"	8"	7"	7"	6"	–	–	–
Threaded Stud Length (excluding 1" embedded into top PL)	3⅝"	8"	3⅝"	3⅝"	3⅝"	3⅝"	3⅝"	3⅝"	3⅝"	3⅝"	3⅝"	8"	8"	3⅝"

Notes:

Prior to ordering any material, the Contractor shall verify in the field all bearing & steel extension heights and fill plate & shim plate thicknesses.

Side retainers and other steel members required for the bearing assembly shall be included in the cost of Elastomeric Bearing Assembly, Type I.

Anchor bolts and side retainers at all supports shall be installed as each member is erected unless an equivalent temporary means of lateral restraint is used.

The structural steel plates of the Bearing Assembly, fixed bearing plates, pintles, and steel extensions shall conform to the requirements of AASHTO M270, Grade 50.

Two ⅛" adjusting shims shall be provided for each bearing in addition to all other plates or shims and placed as shown on bearing details.

The cost for fabricating and installing the fixed bearing assembly, steel extensions, fill plates and shim plates will be paid for as Furnishing and Erecting Structural Steel.

Drilled and set anchor bolts shall be installed according to Article 521.06 of the Standard Specifications.

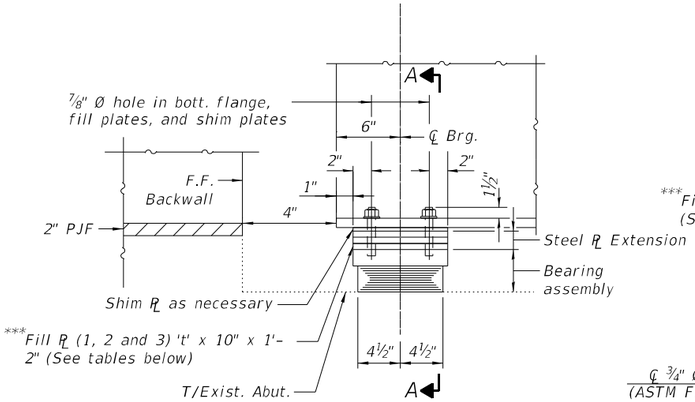

ELEVATION

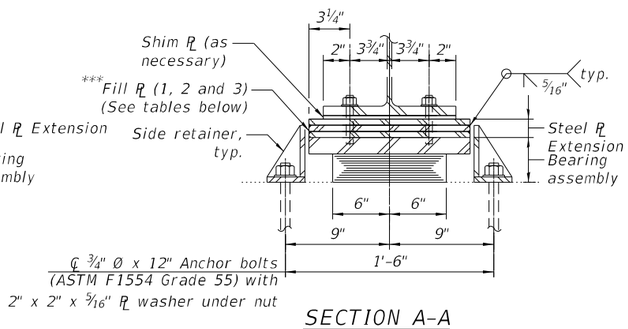

SECTION A-A

TYPE I ELASTOMERIC EXP. BRG.

(Beams 3 thru 11)

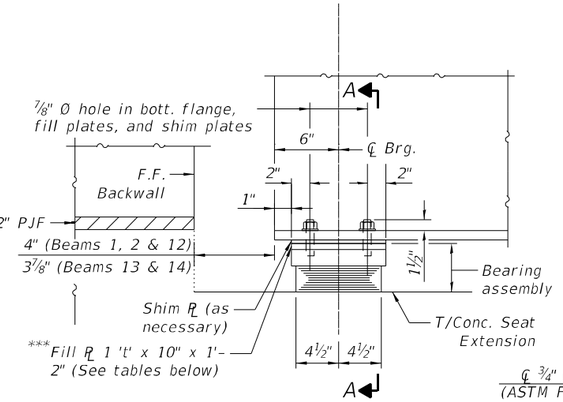

ELEVATION

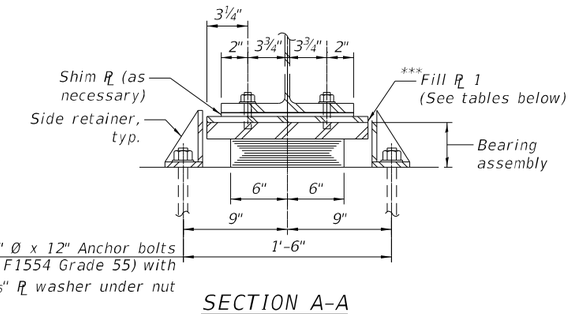

SECTION A-A

TYPE I ELASTOMERIC EXP. BRG.

(Beams 1, 2, 12 thru 14)

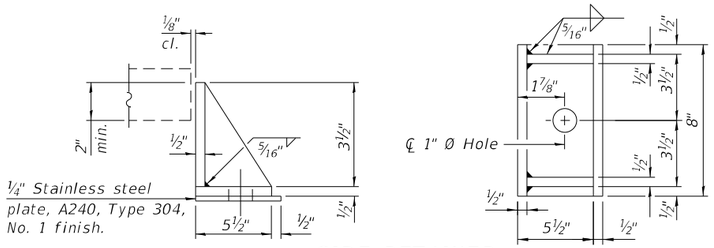

SIDE RETAINER

Equivalent rolled angle with stiffeners will be allowed in lieu of welded plates.
(22 req'd)

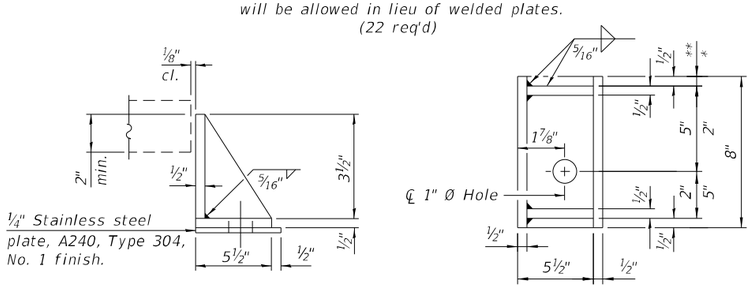

MODIFIED SIDE RETAINER

(at Beams 2, 3, 11 & 12)

Equivalent rolled angle with stiffeners will be allowed in lieu of welded plates.
See sheets 29 & 30 of 35 for locations.
(6 req'd)

* Beams 2, 3 & 12 north side of brg.

** Beams 2, 11 & 12 south side of brg.

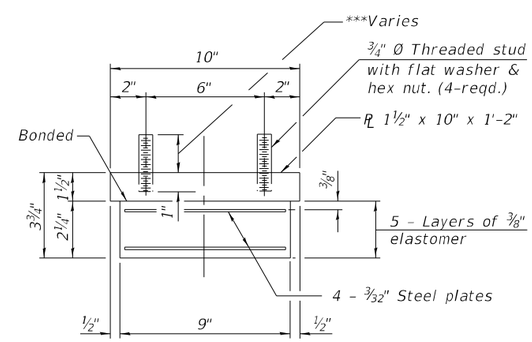

BEARING ASSEMBLY

Note:
Shim plates shall not be placed under bearing assembly.

*** See East Abutment Fill PL Dimensions tables.

BILL OF MATERIAL

Item	Unit	Total
Elastomeric Bearing Assembly Type I	Each	14
Anchor Bolts, ¾"	Each	28

Note:
See sheet 25 of 35 for notes.

***EAST ABUTMENT FILL PL DIMENSIONS

	BM 1	BM 2	BM 3	BM 4	BM 5	BM 6	BM 7	BM 8	BM 9	BM 10	BM 11	BM 12	BM 13	BM 14
Fill Plate 1 't'	-	1⅛"	2"	2"	2"	2"	2"	2"	2"	2"	2"	1⅛"	¼"	-
Fill Plate 2 't'	-	-	1"	2"	2"	2"	2"	2"	2"	2"	1½"	-	-	-
Fill Plate 3 't'	-	-	-	⅛"	⅜"	1"	1½"	1½"	½"	⅜"	-	-	-	-
Threaded Stud Length (excluding 1" embedded into top PL)	3⅝"	3⅝"	8"	8"	8"	8"	8"	8"	8"	8"	8"	3⅝"	3⅝"	3⅝"

GANNETT FLEMING

USER NAME = jstarzyk	DESIGNED - MDA	REVISED -	
	CHECKED - MZ	REVISED -	
PLOT SCALE = 2.0000 ' / in.	DRAWN - MDA	REVISED -	
PLOT DATE = 3/20/2024	CHECKED - MZ	REVISED -	

STATE OF ILLINOIS
DEPARTMENT OF TRANSPORTATION

EAST ABUTMENT BEARING DETAILS
STRUCTURE NO. 045-0007

SHEET 26 OF 35 SHEETS

F.A.P. RTE.	SECTION	COUNTY	TOTAL SHEETS	SHEET NO.
345	FAP 345-23-BR	KANE	379	199

CONTRACT NO. 62U83

ILLINOIS | FED. AID PROJECT

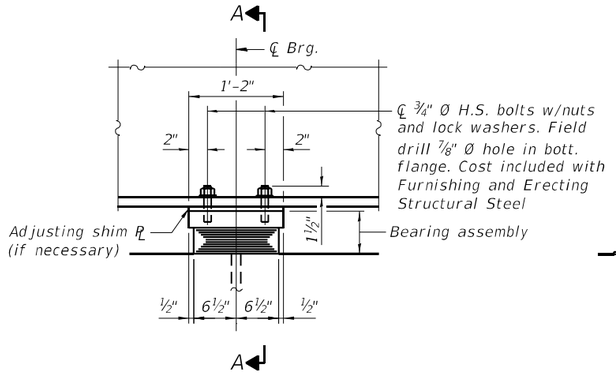

ELEVATION

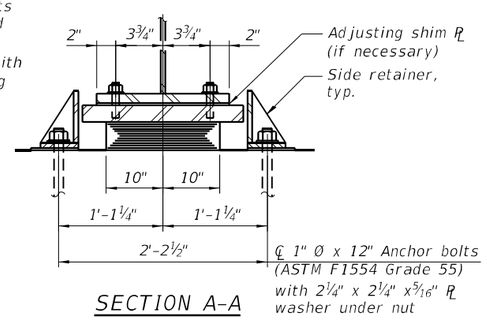

SECTION A-A

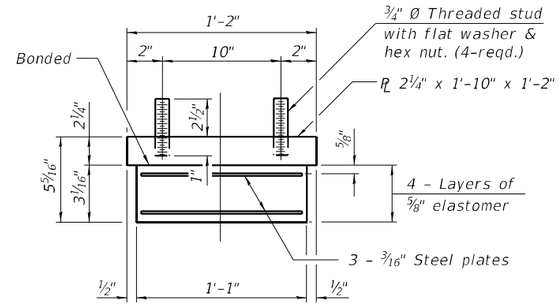

BEARING ASSEMBLY

Note:
Shim plates shall not be placed under bearing assembly.

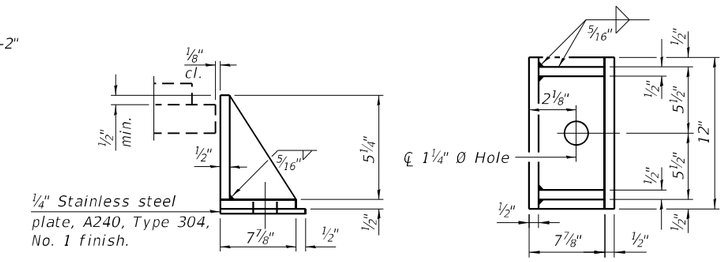

SIDE RETAINER

Equivalent rolled angle with stiffeners will be allowed in lieu of welded plates.
(28 req'd)

TYPE I ELASTOMERIC EXP. BRG. AT PIER 1

See sheet 25 of 35 for notes.

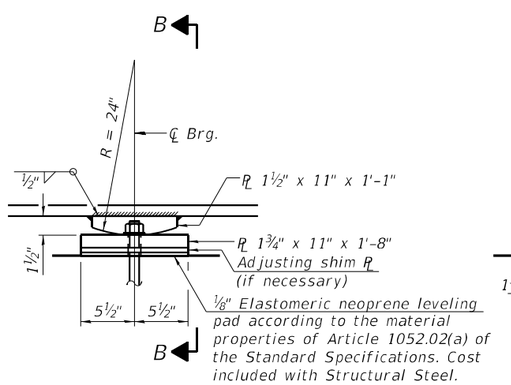

ELEVATION

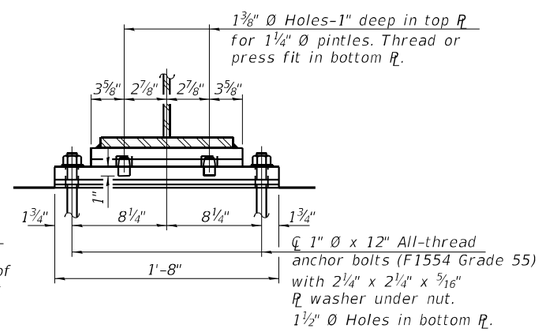

SECTION B-B

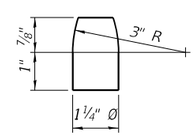

PINTLE

FIXED BEARING AT PIER 2

See sheet 25 of 35 for notes.
(14 req'd)

BILL OF MATERIAL

Item	Unit	Total
Elastomeric Bearing Assembly Type I	Each	14
Anchor Bolts, 1"	Each	56