06-14-2024 LETTING ITEM 140

F.A.I. RTE.	SECTION	COUNTY	TOTAL SHEETS	SHEET NO.
55	(84-2BR-1) D, BY, BP, BRR	SANGAMON	139	1
	ILLINOIS	CONTRACT NO. 72K98		

STATE OF ILLINOIS
DEPARTMENT OF TRANSPORTATION

PROPOSED
HIGHWAY PLANS

FAI ROUTE 55 (INTERSTATE 55)
SECTION (84–2BR–1) D, BY, BP, BRR
PROJECT NHPP–D2C1(426)
BRIDGE DECK REPLACEMENT AND WIDENING, BRIDGE REPAIRS
SANGAMON COUNTY

C–96–027–19

D-96-019-19

LOCATION OF SECTION INDICATED THUS: –

FOR INDEX OF SHEETS, SEE SHEET NO. 3
FOR SUMMARY OF QUANTITIES, SEE SHEET NO. 4 TO 11

HIGHWAY CLASSIFICATION

ROUTE: I-55 (NB)
FUNCTIONAL CLASS: INTERSTATE
ONE WAY ADT: 17,400 (2020): 23,400 (2050)
ONE WAY ADTT: 7,482 (2020): 10,062 (2050)
DHV: 2,107 (2050)
DESIGN SPEED: 75 MPH
POSTED SPEED: 70 MPH

ROUTE: I-55 (SB)
FUNCTIONAL CLASS: INTERSTATE
ONE WAY ADT: 20,300 (2020): 27,350 (2050)
ONE WAY ADTT: 9,744 (2020): 13,128 (2050)
DHV: 2,461 (2050)
DESIGN SPEED: 75 MPH
POSTED SPEED: 70 MPH

TOWNSHIP

CLEARLAKE

COORDINATE SYSTEM:

STATE PLANE ZONE – ILLINOIS EAST

POSTED SPEED : 70 MPH

R 5 W 3rd PM | R 4 W 3rd PM

T 14 N

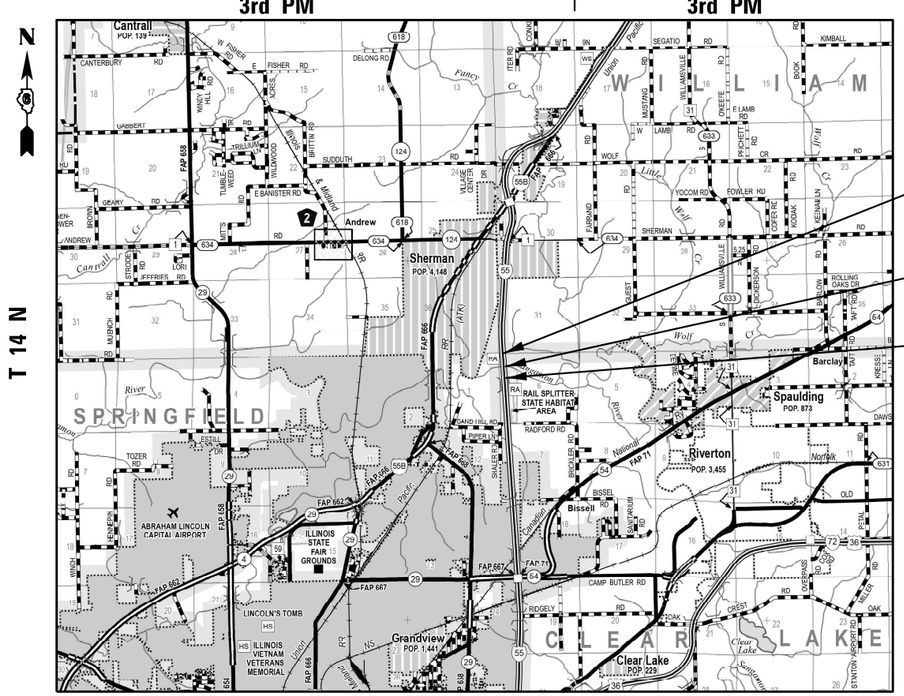

END IMPROVEMENTS
STA. 807+40.77
(I-55)

EXISTING SN 084-0018 (NB) & SN 084-0019 (SB)
STA. 793+05.78 TO STA. 804+30.78
I-55 OVER SANGAMON RIVER

BEGIN IMPROVEMENTS
STA. 789+67.54
(I-55)

100′ 200′ 300′ — 1″ = 100′
10′ 20′ 30′ — 1″ = 10′
50′ 100′ — 1″ = 50′
50′ 100′ — 1″ = 40′
50′ 100′ — 1″ = 30′
50′ 100′ — 1″ = 20′

FULL SIZE PLANS HAVE BEEN PREPARED USING STANDARD ENGINEERING SCALES. REDUCED SIZED PLANS WILL NOT CONFORM TO STANDARD SCALES. IN MAKING MEASUREMENTS ON REDUCED PLANS, THE ABOVE SCALES MAY BE USED.

J.U.L.I.E.
JOINT UTILITY LOCATION INFORMATION FOR EXCAVATION
1-800-892-0123
OR 811

PROJECT ENGINEER: BRIAN LANINGHAM, PE (217) 782–6609
PROJECT MANAGER FRANK CARABALLO, PE (217) 524–7697

CONTRACT NO. 72K98

CMT
License No. 184-000613

GROSS LENGTH = 4,533 FT. = 0.859 MILE
NET LENGTH = 4,533 FT. = 0.859 MILE

KRISTIN L. TIMMONS
062-057643
REGISTERED PROFESSIONAL ENGINEER OF ILLINOIS

SEAL

SIGNATURE:
DATE SIGNED: MARCH 22 2024
LICENSE EXPIRATION DATE: 11/30/2025

STATE OF ILLINOIS
DEPARTMENT OF TRANSPORTATION

SUBMITTED March 29 20 24
REGIONAL ENGINEER
May 10, 2024
ENGINEER OF DESIGN AND ENVIRONMENT
May 10, 2024
DIRECTOR OF HIGHWAYS PROJECT IMPLEMENTATION

PRINTED BY THE AUTHORITY OF THE STATE OF ILLINOIS

REV. - MS

STATE OF ILLINOIS
DEPARTMENT OF TRANSPORTATION
DIVISION OF HIGHWAYS
DISTRICT 6

EXAMINED March, 14 **20** 24

ENGINEER OF OPERATIONS

EXAMINED March, 26 **20** 24

ENGINEER OF PROJECT IMPLEMENTATION

EXAMINED March, 29 **20** 24

ENGINEER OF PROGRAM DEVELOPMENT

MODEL: Signature Sheet [Sheet]
FILE NAME: pw://mineingrpw.bentley.com:mineconnect-projects/Documents/DOT21004 1034004 1030/Sheets/72K98/DM72K98-sht-Signature Sht 002.dgn

CMT
License No. 184-000613 © Copyright CMT, Inc.

USER NAME = rheady	DESIGNED - VJR	REVISED -	
	DRAWN - RAH	REVISED -	
PLOT SCALE = 0.16666667 ' / in.	CHECKED - KLT	REVISED -	
PLOT DATE = 3/25/2024	DATE - MARCH 2024	REVISED -	

STATE OF ILLINOIS
DEPARTMENT OF TRANSPORTATION

FAI ROUTE 55 - INTERSTATE 55
SIGNATURE SHEET

SCALE: SHEET OF SHEETS STA. TO STA.

F.A.I. RTE.	SECTION	COUNTY	TOTAL SHEETS	SHEET NO.
55	(84-2BR-1) D, BY, BP, BRP	SANGAMON	139	2
		CONTRACT NO. 72K98		
	ILLINOIS	FED. AID PROJECT		

GENERAL NOTES

1. THE FOLLOWING RATES OF APPLICATION HAVE BEEN USED TO CALCULATE PLAN QUANTITIES:

ALL OTHER AGGREGATE	1.60 TONS/CU. YD.
AGG BASE COURSE TY A	1.80 TONS/CU. YD.
AGG SURFACE COURSE TY A	1.80 TONS/CU. YD.
SUBBASE GRANULAR MATERIAL TY A	1.80 TONS/CU. YD.
GRANULAR STRUCTURAL BACKFILL	1.80 TONS/CU. YD.
PUGGED AGGREGATE	2.05 TONS/CU. YD.
SEEDING FERTILIZER RATIO (NIT:PHOS:POT)	90:90:90 LBS./AC.
AGRICULTURAL GROUND LIMESTONE	2.00 TONS/AC.
BITUMINOUS MATERIALS:	
ON MILLED OR EXISTING PAVEMENT	0.05 LB/SQ. FT.
INTERMEDIATE LIFTS (TACK COAT)	0.025 LB/SQ. FT.
HMA SURFACE/BINDER	0.056 TONS/SQ. YD. * IN.

2. THE QUANTITY OF SHORT TERM PAVEMENT MARKING SHOWN IN THE PLANS IS BASED ON ONE APPLICATION EACH FOR THE HMA SURFACE REMOVAL BINDER COURSE, AND SURFACE COURSE.

3. AT ALL LOCATIONS WHERE THE PROPOSED HOT MIX ASPHALT OR CONCRETE PAVEMENT JOINS AN EXISTING HOT MIX ASPHALT OR CONCRETE PAYMENT, A FULL DEPTH SAWED JOINT SHALL BE CONSTRUCTED. THE COST OF THIS JOINT WILL BE INCLUDED IN THE COST OF THE TYPE OF PAVEMENT BEING CONSTRUCTED.

4. LONGITUDINAL JOINT SEALANT SHALL BE PLACED ALONG THE CENTERLINE JOINT, UNDER THE HMA SURFACE COURSE.

5. THE THICKNESS OF THE HMA MIXTURE SHOWN ON THE PLANS IS THE NOMINAL THICKNESS. DEVIATIONS FROM THE NOMINAL THICKNESS WILL BE PERMITTED WHEN SUCH DEVIATIONS OCCUR DUE TO IRREGULARITIES IN THE EXISTING SURFACE OR BASE ON WHICH THE HMA MIXTURE IS PLACED.

6. IN ADDITION TO FIELD SURVEYS AND AERIAL SURVEYS, PLAN DIMENSIONS AND DETAILS RELATIVE TO THE EXISTING FACILITIES HAVE BEEN TAKEN FROM EXISTING PLANS AND ARE SUBJECT TO CONSTRUCTION VARIATIONS. IT SHALL BE THE CONTRACTOR'S RESPONSIBILITY TO VERIFY SUCH DIMENSIONS AND DETAILS IN THE FIELD. SUCH VARIATIONS SHALL NOT BE A CAUSE FOR ADDITIONAL COMPENSATION. HOWEVER, THE CONTRACTOR WILL BE PAID FOR THE QUANTITY ACTUALLY FURNISHED AT THE BID UNIT PRICE FOR THE WORK.

7. THE CONTRACTOR SHALL NOTIFY THE IDOT DISTRICT 6 BUREAU OF OPERATIONS AT (217) 785-5306 THREE WEEKS PRIOR TO IMPLEMENTING ANY TRAFFIC CONTROL.

8. ALL TEMPORARY PAVEMENT MARKING WILL BE PLACED IN SUCH A MANNER SO AS NOT TO INTERFERE WITH THE PLACEMENT OF PERMANENT PAVEMENT MARKINGS.

COMMITMENTS

1. IMPACTS TO INDIANA BATS AND NORTHERN LONG-EARED BATS WILL BE MITIGATED BY IMPLEMENTING A TREE CLEARING RESTRICTION THAT WILL ALLOW TREE CLEARING ONLY DURING THE PERIOD OF TIME BETWEEN SEPTEMBER 30 AND APRIL 1.

2. ALL TEMPORARY IMPACTS TO WATERS OF THE U.S. WILL BE RESTORED TO PRECONSTRUCTION CONTOURS AND RESEEDED.

INDEX OF SHEETS

HIGHWAY STANDARDS

000001-08	STANDARD SYMBOLS, ABBREVIATIONS AND PATTERNS
001001-02	AREAS OF REINFORCEMENT BARS
001006	DECIMAL OF AN INCH AND OF A FOOT
280001-07	TEMPORARY EROSION CONTROL SYSTEMS
420001-10	PAVEMENT JOINTS
420406	PAVEMENT CONNECTOR (HMA) FOR BRIDGE APPROACH SLAB
515001-04	NAME PLATE FOR BRIDGES
630001-13	STEEL PLATE BEAM GUARDRAIL
630301-09	SHOULDER WIDENING FOR TYPE 1 (SPECIAL) GUARDRAIL TERMINALS
631031-18	TRAFFIC BARRIER TERMINAL, TYPE 6
701101-05	OFF-RD OPERATIONS, MULTILANE, 15' TO 24" FROM PAVEMENT EDGE
701106-02	OFF-RD OPERATIONS, MULTILANE, MORE THAN 15' AWAY
701400-12	APPROACH TO LANE CLOSURE, FREEWAY/EXPRESSWAY
701401-13	LANE CLOSURE, FREEWAY/EXPRESSWAY
701402-12	LANE CLOSURE, FREEWAY/EXPRESSWAY, WITH BARRIER
701411-09	LANE CLOSURE MULTILANE ENTRANCE OR EXIT RAMP 45 MPH OR MORE
701426-09	LANE CLOSURE MULTILANE INTERMITTENT OR MOVING OPERATIONS 45 MPH OR LESS
701428-01	TRAFFIC CONTROL SETUP AND REMOVAL FREEWAY/EXPRESSWAY
701901-09	TRAFFIC CONTROL DEVICES
704001-08	TEMPORARY CONCRETE BARRIER
720001-01	SIGN PANEL MOUNTING DETAILS
720021-03	SIGN PANEL, EXTRUDED ALUMINIUM TYPE
725001-01	OBJECT AND TERMINAL MARKERS
780001-05	TYPICAL PAVEMENT MARKINGS
781001-04	TYPICAL APPLICATIONS RAISED REFLECTIVE PAVEMENT MARKERS
782006-01	GUARDRAIL AND BARRIER WALL REFLECTOR MOUNTING DETAILS
420701-03	PAVEMENT WELDED WIRE REINFORCEMENT
643001-02	SAND MODULE IMPACT ATTENUATOR

MIXTURE REQUIREMENTS

HMA SURFACE COURSE & HMA BINDER COURSE (LOWER LIFTS)			
MIXTURE USE(S):	HMA SURFACE COURSE (TOP 2")	HMA BINDER COURSE (ALL LIFTS)	HMA CONNECTOR
PG:	SBS PG 70-22	SBS PG 70-22	PG 70-28
DESIGN AIR VOIDS:	4.0% @ N90	4.0% @ N90	4% @ N90
MIXTURE COMPOSITION	IL - 9.5	IL - 9.5	IL 19.0
FRICTION AGGREGATE:	MIX "E"	N/A	N/A
MIXTURE WEIGHT	112 LB/SQ IN	112 LB/SQ IN	112 LB/SQ YD X IN
QUALITY MANAGEMENT	QC/QA	QC/QA	QC/QA
SUBLOT SIZE:	N/A	N/A	N/A
MTD REQUIRED	NO	NO	NO

NOTE:
NUCLEAR GAUGE WILL BE USED FOR DENSITY VERIFICATION BY THE ENGINEER ON ALL QC/QA ITEMS.

REV. - MS

USER NAME = rheady	DESIGNED - VJR	REVISED -	
	DRAWN - RAH	REVISED -	
PLOT SCALE = 0.16666667 ' / in.	CHECKED - KLT	REVISED -	
PLOT DATE = 3/27/2024	DATE - MARCH 2024	REVISED -	

STATE OF ILLINOIS
DEPARTMENT OF TRANSPORTATION

FAI ROUTE 55 - INTERSTATE 55
GENERAL NOTES, COMMITMENTS & MIXTURE REQUIREMENTS

SCALE: | SHEET OF SHEETS | STA. TO STA.

F.A.I. RTE.	SECTION	COUNTY	TOTAL SHEETS	SHEET NO.
55	(84-2BR-1) D, B YB PBRR	SANGAMON	139	3

CONTRACT NO. 72K98
ILLINOIS | FED. AID PROJECT

CONSTRUCTION CODE
6-00200-0300
NHPP - FEDERAL (90%) STATE(10%)

CODE NO.	ITEM	UNIT	TOTAL QUANTITY	BRIDGE 0013 URBAN
20100500	TREE REMOVAL, ACRES	ACRE	10	10
20900110	POROUS GRANULAR BACKFILL	CU YD	34	34
25000200	SEEDING, CLASS 2	ACRE	11.25	11.25
25000400	NITROGEN FERTILIZER NUTRIENT	POUND	1015	1015
25000500	PHOSPHORUS FERTILIZER NUTRIENT	POUND	1015	1015
25000600	POTASSIUM FERTILIZER NUTRIENT	POUND	1015	1015
25000700	AGRICULTURAL GROUND LIMESTONE	TON	23	23
25100115	MULCH, METHOD 2	ACRE	11.25	11.25
28000250	TEMPORARY EROSION CONTROL SEEDING	POUND	1,008	1,008
28000400	PERIMETER EROSION BARRIER	FOOT	6,538	6,538
28000500	INLET AND PIPE PROTECTION	EACH	4	4
40600290	BITUMINOUS MATERIALS (TACK COAT)	POUND	3,965	3,965
40600370	LONGITUDINAL JOINT SEALANT	FOOT	3,006	3,006
40600982	HOT-MIX ASPHALT SURFACE REMOVAL - BUTT JOINT	SQ YD	3,936	3,936

CONSTRUCTION CODE
6-00200-0300
NHPP - FEDERAL (90%) STATE(10%)

CODE NO.	ITEM	UNIT	TOTAL QUANTITY	BRIDGE 0013 URBAN
40600990	TEMPORARY RAMP	SQ YD	960	960
40603209	POLYMERIZED HOT-MIX ASPHALT BINDER COURSE, IL-9.5, N90	TON	720	720
40604174	POLYMERIZED HOT-MIX ASPHALT SURFACE COURSE, IL-9.5, MIX "E", N90	TON	769	769
42000070	PAVEMENT CONNECTOR (HMA) FOR BRIDGE APPROACH SLAB	SQ YD	107	107
48101200	AGGREGATE SHOULDERS, TYPE B	TON	191	191
50102400	CONCRETE REMOVAL	CU YD	76.4	76.4
50104650	SLOPE WALL REMOVAL	SQ YD	80	80
50104720	REMOVAL OF EXISTING CONCRETE DECK	EACH	2	2
50300100	FLOOR DRAINS	EACH	244	244
50300225	CONCRETE STRUCTURES	CU YD	194.4	194.4
50300255	CONCRETE SUPERSTRUCTURE	CU YD	4,429.0	4,429
50300300	PROTECTIVE COAT	SQ YD	17,034	17,034
50301350	CONCRETE SUPERSTRUCTURE (APPROACH SLAB)	CU YD	314.8	314.8
50500105	FURNISHING AND ERECTING STRUCTURAL STEEL	L SUM	1	1

CONSTRUCTION CODE
6-00200-0300
NHPP - FEDERAL (90%) STATE(10%)

CODE NO.	ITEM	UNIT	TOTAL QUANTITY	BRIDGE 0013 URBAN
50500505	STUD SHEAR CONNECTORS	EACH	35,124	35,124
50800205	REINFORCEMENT BARS, EPOXY COATED	POUND	1,236,750	1,236,750
50800515	BAR SPLICERS	EACH	8,748	8,748
51100300	SLOPE WALL 6 INCH	SQ YD	80	80
51500100	NAME PLATES	EACH	2	2
52000110	PREFORMED JOINT STRIP SEAL	FOOT	236	236
52100010	ELASTOMERIC BEARING ASSEMBLY, TYPE I	EACH	138	138
52100020	ELASTOMERIC BEARING ASSEMBLY, TYPE II	EACH	58	58
52100510	ANCHOR BOLTS, 3/4"	EACH	232	232
52100520	ANCHOR BOLTS, 1"	EACH	384	384
58700300	CONCRETE SEALER	SQ FT	3,489	3,489
* 63000001	STEEL PLATE BEAM GUARDRAIL, TYPE A, 6 FOOT POSTS	FOOT	1,059	1,059
* 63100085	TRAFFIC BARRIER TERMINAL, TYPE 6	EACH	4	4
* 63100167	TRAFFIC BARRIER TERMINAL, TYPE 1 (SPECIAL) TANGENT	EACH	1	1

* SPECIALTY ITEM

REV. - MS

CONSTRUCTION CODE
6-00200-0300
NHPP - FEDERAL (90%) STATE(10%)

CODE NO.	ITEM	UNIT	TOTAL QUANTITY	BRIDGE 0013 URBAN
63200310	GUARDRAIL REMOVAL	FOOT	1,108	1,108
64300260	IMPACT ATTENUATORS (FULLY REDIRECTIVE, NARROW), TEST LEVEL 3	EACH	2	2
67000400	ENGINEER'S FIELD OFFICE, TYPE A	CAL MO	30	30
67100100	MOBILIZATION	L SUM	1	1
70100207	TRAFFIC CONTROL AND PROTECTION, STANDARD 701402	EACH	2	2
70100420	TRAFFIC CONTROL AND PROTECTION, STANDARD 701411	EACH	1	1
70100800	TRAFFIC CONTROL AND PROTECTION, STANDARD 701401	L SUM	1	1
70106700	TEMPORARY RUMBLE STRIPS	EACH	4	4
70107025	CHANGEABLE MESSAGE SIGN	CAL DA	1,890	1,890
70200100	NIGHTTIME WORK ZONE LIGHTING	L SUM	1	1
70300100	SHORT TERM PAVEMENT MARKING	FOOT	1,856	1,856
70300150	SHORT TERM PAVEMENT MARKING REMOVAL	SQ FT	619	619
70400100	TEMPORARY CONCRETE BARRIER	FOOT	5,575	5,575
70400200	RELOCATE TEMPORARY CONCRETE BARRIER	FOOT	3,100	3,100

CONSTRUCTION CODE
6-00200-0300
NHPP - FEDERAL (90%) STATE(10%)

	CODE NO.	ITEM	UNIT	TOTAL QUANTITY	BRIDGE 0013 URBAN
	70400600	RELOCATE TEMPORARY CONCRETE BARRIER, STATE OWNED	FOOT	600	600
	70600260	IMPACT ATTENUATORS, TEMPORARY (FULLY REDIRECTIVE, NARROW), TEST LEVEL 3	EACH	4	4
	70600332	IMPACT ATTENUATORS, RELOCATE (FULLY REDIRECTIVE, NARROW), TEST LEVEL 3	EACH	2	2
*	72501000	TERMINAL MARKER - DIRECT APPLIED	EACH	1	1
*	78009005	MODIFIED URETHANE PAVEMENT MARKING - LINE 5"	FOOT	13,508	13,508
*	78009006	MODIFIED URETHANE PAVEMENT MARKING - LINE 6"	FOOT	173	173
*	78009008	MODIFIED URETHANE PAVEMENT MARKING - LINE 8"	FOOT	261	261
*	78009012	MODIFIED URETHANE PAVEMENT MARKING - LINE 12"	FOOT	2,704	2,704
*	78011030	GROOVING FOR RECESSED PAVEMENT MARKING 6"	FOOT	8,319	8,319
*	78011045	GROOVING FOR RECESSED PAVEMENT MARKING 9"	FOOT	261	261
*	78100100	RAISED REFLECTIVE PAVEMENT MARKER	EACH	26	26
*	78200005	GUARDRAIL REFLECTORS, TYPE A	EACH	17	17
	78300200	RAISED REFLECTIVE PAVEMENT MARKER REMOVAL	EACH	15	15
	78300202	PAVEMENT MARKING REMOVAL - WATER BLASTING	SQ FT	18,866	18,866

* SPECIALTY ITEM

CONSTRUCTION CODE
6-00200-0300
NHPP - FEDERAL (90%) STATE(10%)
BRIDGE
0013
URBAN

CODE NO.	ITEM	UNIT	TOTAL QUANTITY	BRIDGE 0013 URBAN
X5030250	BRIDGE DECK GROOVING (LONGITUDINAL)	SQ YD	9,470	9,470
X5080530	BAR TERMINATORS	EACH	3,592	3,592
X5211420	HIGH LOAD MULTI-ROTATIONAL BEARINGS, DISC, FIXED-400K	EACH	18	18
X5211620	HIGH LOAD MULTI-ROTATIONAL BEARINGS, DISC, GUIDED EXPANSION-400K	EACH	18	18
X6430210	REMOVE AND REINSTALL IMPACT ATTENUATORS	EACH	2	2
X7011850	REAL-TIME TRAFFIC CONTROL SYSTEM	L SUM	1	1
X7040012	TEMPORARY CONCRETE BARRIER (TO REMAIN PERMANENTLY)	FOOT	600	600
X7830050	RAISED REFLECTIVE PAVEMENT MARKER, REFLECTOR REMOVAL	EACH	29	29
* X7830052	RAISED REFLECTIVE PAVEMENT MARKER, REFLECTOR REPLACEMENT	EACH	29	29
Z0001899	JACK AND REMOVE EXISTING BEARINGS	EACH	132	132
Z0001903	STRUCTURAL STEEL REMOVAL	POUND	94,540	94,540
Z0001905	STRUCTURAL STEEL REPAIR	POUND	57,005	57,005
Z0007101	CONTAINMENT AND DISPOSAL OF LEAD PAINT CLEANING RESIDUES NO. 1	L SUM	1	1
Z0007102	CONTAINMENT AND DISPOSAL OF LEAD PAINT CLEANING RESIDUES NO. 2	L SUM	1	1

REV. - MS

* SPECIALTY ITEM

CONSTRUCTION CODE
6-00200-0300
NHPP - FEDERAL (90%) STATE(10%)

CODE NO.	ITEM	UNIT	TOTAL QUANTITY	BRIDGE 0013 URBAN
Z0010501	CLEANING AND PAINTING STEEL BRIDGE NO. 1	L SUM	1	1
Z0010502	CLEANING AND PAINTING STEEL BRIDGE NO. 2	L SUM	1	1
Z0012754	STRUCTURAL REPAIR OF CONCRETE (DEPTH EQUAL TO OR LESS THAN 5 INCHES)	SQ FT	173	173
Z0012755	STRUCTURAL REPAIR OF CONCRETE (DEPTH GREATER THAN 5 INCHES)	SQ FT	42	42
Z0013798	CONSTRUCTION LAYOUT	L SUM	1	1
Z0018002	DRAINAGE SCUPPERS, DS-11	EACH	8	8
Z0018010	DRAINAGE SCUPPERS, DS-33	EACH	8	8
Z0029090	DIAMOND GRINDING (BRIDGE SECTION)	SQ YD	13,678	13,678
Z0032300	JACKING EXISTING SUPERSTRUCTURE	L SUM	1	1
Z0034390	MODULAR EXPANSION JOINT 6"	FOOT	118	118
Z0034393	MODULAR EXPANSION JOINT 9"	FOOT	118	118
Z0065700	SLOPE WALL REPAIR	SQ YD	209	209
Z0065730	SLOPE WALL SLURRY PUMPING	CU YD	14	14
Ø Z0076600	TRAINEES	HOUR	5000	5000
Ø Z0076604	TRAINEES TRAINING PROGRAM GRADUATE	HOUR	5000	5000

Ø 0042

REV. - MS

MODEL: SOQ-7 [Sheet]
FILE NAME: pw://contango-pw.bentley.com:cmt-connect-projects/Documents/IDOT/21004-103-40/41030/Sheets/72K98/D572K98-sht-soq.dgn

CMT
License No. 184-000613 © Copyright CMT, Inc.

USER NAME = vramachandra	DESIGNED - VJR	REVISED -	
	DRAWN - RAH	REVISED -	
PLOT SCALE = 0.16666667 ' / in.	CHECKED - KLT	REVISED -	
PLOT DATE = 3/28/2024	DATE - MARCH 2024	REVISED -	

STATE OF ILLINOIS
DEPARTMENT OF TRANSPORTATION

FAI ROUTE 55 - INTERSTATE 55
SUMMARY OF QUANTITIES

SCALE: N/A | SHEET 7 OF 8 SHEETS | STA. TO STA.

F.A.I. RTE.	SECTION	COUNTY	TOTAL SHEETS	SHEET NO.
55	(84-2BR-1) D, BY, BP, BRR	SANGAMON	139	10
		CONTRACT NO. 72K98		
		ILLINOIS FED. AID PROJECT		

PAGE LEFT INTENTIONALLY BLANK

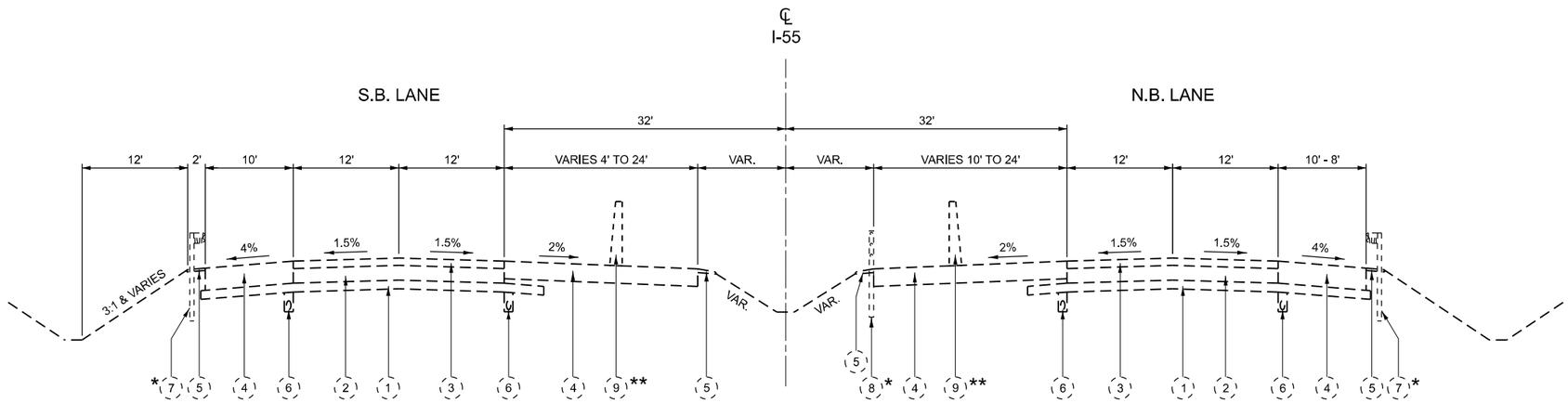

F.A.I. 55 (I-55) TANGENT SECTION

(LOOKING NORTH)
STA. 783+12.84 TO STA. 810+26.18

* STATION RANGES FOR GUARDRAIL AND CABLE BARRIER
GUARDRAIL
STA. 786+03.04 TO STA. 792+89.86 LT.
STA. 789+07.06 TO STA. 792+89.86 RT.
STA. 804+34.74 TO STA. 810+26.23 RT. & LT.

CABLE BARRIER
STA. 782+54.35 TO STA. 790+15.20 RT.
STA. 806+14.07 TO STA. 810+62.82 LT.

** STATION RANGES FOR CONCRETE BARRIER
STA. 789+89.60 TO STA. 792+89.55 RT.
STA. 804+38.68 TO STA. 807+38.78 LT.

F.A.I. 55 (I-55) EXISTING LEGEND

1. EXIST. SUB-BAST GRANULAR MATERIAL, 6"
2. EXIST. 10" PCC PAVEMENT
3. EXIST. HOT MIX ASPHALT 5" AND VAR
4. EXIST. HOT MIX ASPHALT SHOULDERS
5. EXIST. AGGREGATE SHOULDER WEDGE
6. EXIST. UNDERDRAINS
7. EXIST. GUARDRAIL
8. EXIST. HIGH TENSION CABLE MEDIAN BARRIER
9. EXIST. CONCRETE BARRIER

MODEL: EX TYP01 [Sheet]
FILE NAME: pw://mwengineering.bentley.com:mwengineering-connect-eu-pw1/projects/Documents/IDOT/21004/10420/41030/Sheets/72K98/D072K98-sht-Typical.dgn

CMT License No. 184-000613 Copyright CMT, Inc.	USER NAME = rheady	DESIGNED - VJR	REVISED -	STATE OF ILLINOIS DEPARTMENT OF TRANSPORTATION	FAI ROUTE 55 - INTERSTATE 55 EXISTING TYPICAL SECTION	F.A.I. RTE.	SECTION	COUNTY	TOTAL SHEETS	SHEET NO.
		DRAWN - RAH	REVISED -			55	(84-2BR-1) D, BY, BP, BRR	SANGAMON	139	12
	PLOT SCALE = 0.16666667 ' / in.	CHECKED - KLT	REVISED -					CONTRACT NO. 72K98		
	PLOT DATE = 3/25/2024	DATE - MARCH 2024	REVISED -		SCALE: SHEET 1 OF 2 SHEETS STA. TO STA.		ILLINOIS	FED. AID PROJECT		

F.A.I. 55 (I-55) EXISTING LEGEND

1. EXIST. SUB-BAST GRANULAR MATERIAL, 6"
2. EXIST. 10" PCC PAVEMENT
3. EXIST. HOT MIX ASPHALT 5" AND VAR
4. EXIST. HOT MIX ASPHALT SHOULDERS
5. EXIST. AGGREGATE SHOULDER WEDGE
6. EXIST. UNDERDRAINS
7. EXIST. GUARDRAIL
8. EXIST. HIGH TENSION CABLE MEDIAN BARRIER
9. EXIST. CONCRETE BARRIER

F.A.I. 55 (I-55) PROPOSED LEGEND

1. POLYMERIZED HOT-MIX ASPHALT SURFACE COURSE, IL-9.5, MIX "E", N90, 2"
2. POLYMERIZED HOT-MIX ASPHALT BINDER COURSE, IL-9.5, N90, VARIABLE DEPTH
3. TEMPORARY CONCRETE BARRIER (TO REMAIN PERM.)
4. STEEL PLATE BEAM GUARDRAIL, TYPE A, 6 FOOT POSTS
5. AGGREGATE SHOULDER, TYPE B

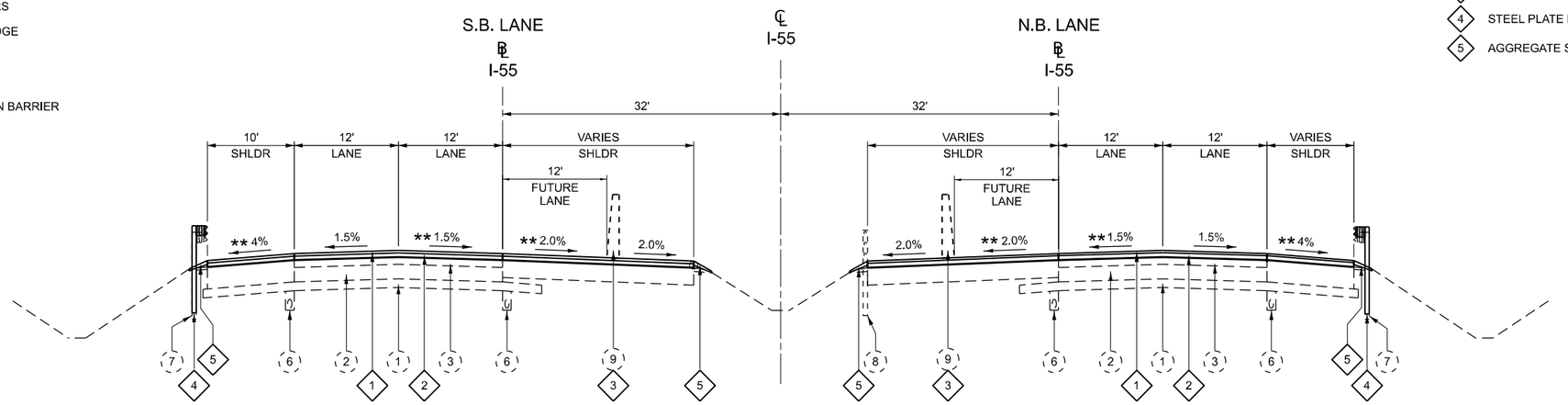

F.A.I. 55 (I-55) PROPOSED SECTION

(LOOKING NORTH)
STA. 789+67.54 TO STA. 792+75.78
STA. 804+60.77 TO STA. 807+40.77

* STATION RANGES FOR CONCRETE BARRIER
STA. 789+92.46 TO STA. 804+87.37 RT.
STA. 792+50.78 TO STA. 807+38.78 LT.

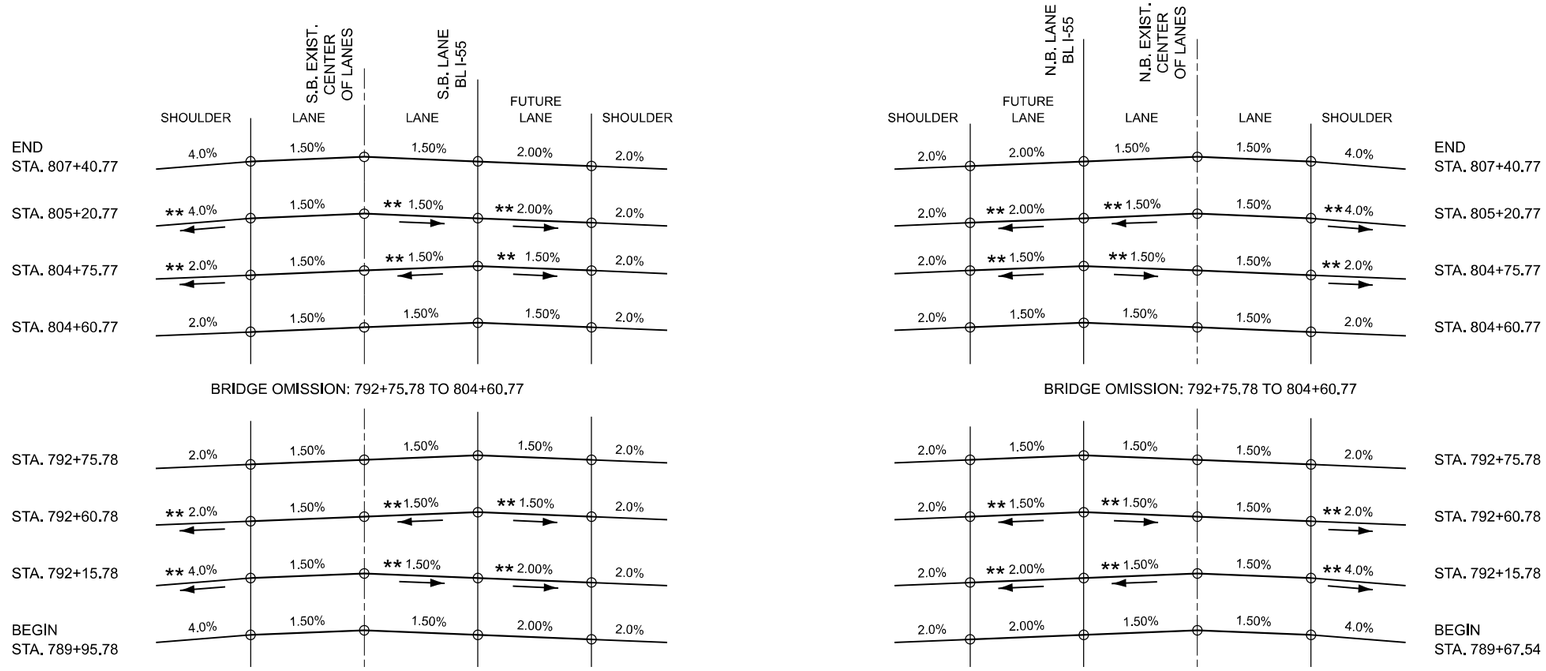

ROADWAY CROWN TRANSITION

USER NAME = vramachandra	DESIGNED - $typde$	REVISED -	STATE OF ILLINOIS DEPARTMENT OF TRANSPORTATION
	DRAWN - $typdr$	REVISED -	
PLOT SCALE = 0.16666667 ' / in.	CHECKED - $typch$	REVISED -	
PLOT DATE = 3/28/2024	DATE - MARCH 2024	REVISED -	

CMT
License No. 184-000613

FAI ROUTE 55 - INTERSTATE 55
PROPOSED TYPICAL SECTIONS

SCALE: | SHEET 2 OF 2 SHEETS | STA. TO STA.

F.A.I. RTE.	SECTION	COUNTY	TOTAL SHEETS	SHEET NO.
55	(84-2BR-1) D, BY, BP, BRR	SANGAMON	139	13
		CONTRACT NO. 72K98		
		ILLINOIS	FED. AID PROJECT	

MODEL: PR TYP02 [Sheet]
FILE NAME: pw://centerpoint.bentley.com:centerpoint-projects/Documents/IDOT/210041 05-4004103 00/Sheets/72K98/D072K98sht-Typical.dgn

EROSION CONTROL SCHEDULE

LOCATION			TREE REMOVAL, ACRES	SEEDING, CLASS 2	NITROGEN FERTLIZER NUTRIENT	PHOSPHORUS FERTILIZER NUTRIENT	POTASSIUM FERTILIZER NUTRIENT	AGRICULTURAL GROUND LIMESTONE	MULCH, METHOD 2	PERIMETER EROSION BARRIER	INLET AND PIPE PROTECTION
STA.	TO	STA.	ACRE	ACRE	POUND	POUND	POUND	TON	ACRE	FOOT	EACH
INTERSTATE 55 - NORTHBOUND											
783+00.00	TO	794+50.00	2.50	2.75	248	248	248	5.5	2.75	1,719	1
794+50.00		809+50.00	2.00	2.25	203	203	203	4.6	2.25		
809+50.00	TO	816+00.00	1.00	1.25	113	113	113	2.6	1.25	1,213	1
INTERSTATE 55 - SOUTHBOUND											
783+00.00	TO	794+50.00	1.50	1.50	135	135	135	3.1	1.50	1,739	1
794+50.00		809+50.00	2.00	2.25	203	203	203	4.6	2.25		
809+50.00	TO	816+00.00	1.00	1.25	113	113	113	2.6	1.25	1,867	1
TOTAL			10.00	11.25	1,015	1,015	1,015	23.0	11.25	6,538	4

GUARDRAIL SCHEDULE

LOCATION			STEEL PLATE BEAM GUARDRAIL, TYPE B, 6 FOOT POSTS	TRAFFIC BARRIER TERMINAL, TYPE 6	TRAFFIC BARRIER TERMINAL, TYPE 1 (SPECIAL) TANGENT	GUARDRAIL REMOVAL	TERMINAL MARKER - DIRECT APPLIED	GUARDRAIL REFLECTORS, TYPE A
STA.	TO	STA.	FOOT	EACH	EACH	FOOT	EACH	EACH
INTERSTATE 55 - NORTHBOUND								
789+67.54	TO	792+75.78	243	1	1	270	1	5
804+60.78	TO	807+40.77	242	1		298		4
INTERSTATE 55 - SOUTHBOUND								
789+95.78	TO	792+75.78	331	1		298		4
804+60.78	TO	807+40.77	243	1		242		4
TOTAL			1,059	4	1	1,108	1	17

PAVEMENT MARKING SCHEDULE

LOCATION			MODIFIED URETHANE PAVEMENT MARKING - LINE 5"	MODIFIED URETHANE PAVEMENT MARKING - LINE 6"	MODFIED URETHANE PAVEMENT MARKING - LINE 12"	GROOVING FOR RECESSED PAVEMENT MARKING 6"	RAISED REFLECTIVE PAVEMENT MARKER	PAVEMENT MARKING REMOVAL - WATER BLASTING	RAISED REFLECTIVE PAVEMEN MARKER REMOVAL	RAISED REFLECTIVE PAVEMENT MARKER, REFLECTOR REMOVAL	RAISED REFLECTIVE PAVEMENT MARKER, REFLECTOR REPLACEMENT	MODIFIED URETHANE PAVEMENT MARKING -LINE 8"	GROOVING FOR RECESSED PAVEMENT MARKING 9"
STA.	TO	STA.	FOOT	FOOT	FOOT	FOOT	EACH	SQ FT	EACH	EACH	EACH	FOOT	FOOT
INTERSTATE 55 - NORTHBOUND													
783+14.51	TO	794+50.00	2,294	173	424	2,162	8	2,986	4	8	8	261	261
794+50.00	TO	809+50.00	3,375		855	1,101	6	5,155	4	8	8		
809+50.00	TO	814+20.86	1,059		73	1,129		1,145					
INTERSTATE 55 - SOUTHBOUND													
783+14.51	TO	794+50.00	2,345		424	1,696	6	3,281	3	6	6		
794+50.00	TO	809+50.00	3,375		855	1,101	6	5,154	4	7	7		
809+50.00	TO	814+20.86	1,059		74	1,129		1,145					
TOTAL			13,508	173	2,704	8,319	26	18,866	15	29	29	261	261

REV. - MS

MODEL: Schedule [Sheet]
FILE NAME: pw://contango-pw.bentley.com:cmt-connect-projects/Documents/DOT/21004103-00A103000/Sheets/72K98/D672K98-sht-schedule.dgn

CMT
License No. 184-000613

USER NAME = vramachandra	DESIGNED - $schde$	REVISED -
	DRAWN - $schdr$	REVISED -
PLOT SCALE = 0.16666667 ' / in.	CHECKED - $schch$	REVISED -
PLOT DATE = 3/28/2024	DATE - MARCH 2024	REVISED -

STATE OF ILLINOIS
DEPARTMENT OF TRANSPORTATION

FAI ROUTE 55 - INTERSTATE 55
SCHEDULE OF QUANTITIES

SCALE: N.T.S. | SHEET 1 OF 2 SHEETS | STA. TO STA.

F.A.I. RTE.	SECTION	COUNTY	TOTAL SHEETS	SHEET NO.
55	(84-2BR-1) D, BY, BP, BRR	SANGAMON	139	14

CONTRACT NO. 72K98
ILLINOIS | FED. AID PROJECT

PAVEMENT SCHEDULE

LOCATION			BITUMIONUS MATERIALS (TACK COAT)	LONGITUDINAL JOINT SEALANT	HOT-MIX ASPHALT SURFACE REMOVAL - BUTT JOINT	POLYMERIZED HOT-MIX ASPHALT BINDER COURSE, IL-9.5, N90	POLYMERIZED HOT-MIX ASPHALT SURFACE COURSE, IL-9.5, MIX "E", N90	AGGREGATE SHOULDER, TYPE B
STA.	TO	STA.	POUND	FOOT	SQ YD	TON	TON	TON
INTERSTATE 55 - NORTHBOUND								
789+67.54	TO	792+75.78	826	730	847	190.2	221.3	44
804+60.78	TO	807+40.77	977	745	847	73.7	198.5	48
INTERSTATE 55 - SOUTHBOUND								
789+95.78	TO	792+75.78	1,186	786	847	216.0	180.8	41
804+60.78	TO	807+40.77	976	745	847	240.4	168.8	58
TOTAL			3,965	3,006	3,388	720	769	191

MAINTENANCE OF TRAFFIC SCHEDULE

LOCATION			TEMPORARY RAMP	HOT-MIX ASPHALT SURFACE REMOVAL - BUTT JOINT	TEMPORARY CONCRETE BARRIER	RELOCATE TEMPORARY CONCRETE BARRIER	IMPACT ATTENUATORS, TEMPORARY (FULLY REDIRECTIVE, NARROW), TEST LEVEL 3	IMPACT ATTENUATORS, (FULLY REDIRECTIVE, NARROW), TEST LEVEL 3	IMPACT ATTENUATORS, RELOCATE (FULLY REDIRECTIVE, NARROW), TEST LEVEL 3	REMOVE AND REINSTALL IMPACT ATTENUATORS	TEMPORARY CONCRETE BARRIER	IMPACT ATTENUATORS, TEMPORARY (FULLY REDIRECTIVE, NARROW), TEST LEVEL 3
STA.	TO	STA.	SQ YD	SQ YD	FOOT	FOOT	EACH	EACH	EACH	EACH	FOOT	EACH
INTERSTATE 55 - NORTHBOUND												
779+50.00	TO	794+50.00	240	137	775	775	1	1	1	1	214	1
794+50.00	TO	809+50.00	240	137	775	775					1,023	
INTERSTATE 55 - SOUTHBOUND												
779+50.00	TO	794+50.00	240	137	775	775	1	1	1	1	194	1
794+50.00	TO	809+50.00	240	137	775	775					1,045	
TOTAL			960	548	3,100	3,100	2	2	2	2	2,475	2
											* BRIDGE PAINTING STAGE	

REV. - MS

MODEL: Schedule-1 [Sheet]
FILE NAME: pw://cmtengr-pw.bentley.com:cmt-connect-projects/Documents/DOT/21/041103-004/03000/Sheets/72K98/D672K98-sht-schedule.dgn

CMT
License No. 184-000613
© Copyright CMT, Inc.

USER NAME = vramachandra	DESIGNED - $schde$	REVISED -	
	DRAWN - $schdr$	REVISED -	
PLOT SCALE = 0.16666667 ' / in.	CHECKED - $schch$	REVISED -	
PLOT DATE = 3/28/2024	DATE - MARCH 2024	REVISED -	

STATE OF ILLINOIS
DEPARTMENT OF TRANSPORTATION

FAI ROUTE 55 - INTERSTATE 55
SCHEDULE OF QUANTITIES

SCALE: N.T.S. | SHEET 2 OF 2 SHEETS | STA. TO STA.

F.A.I. RTE.	SECTION	COUNTY	TOTAL SHEETS	SHEET NO.
55	(84-2BR-1) D, BY, BP, BRR	SANGAMON	139	15
		CONTRACT NO. 72K98		
		ILLINOIS	FED. AID PROJECT	

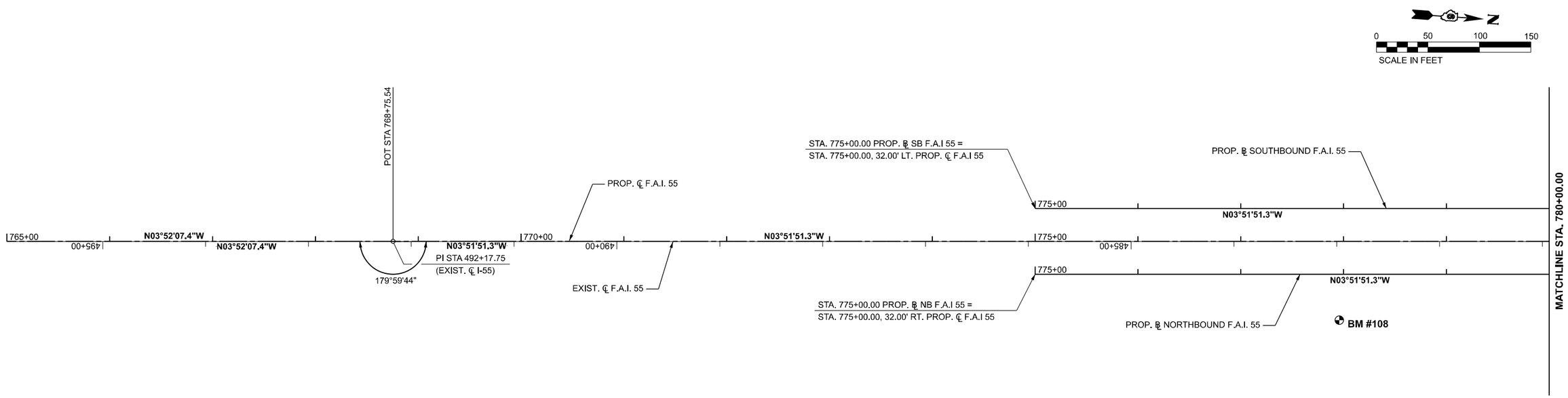

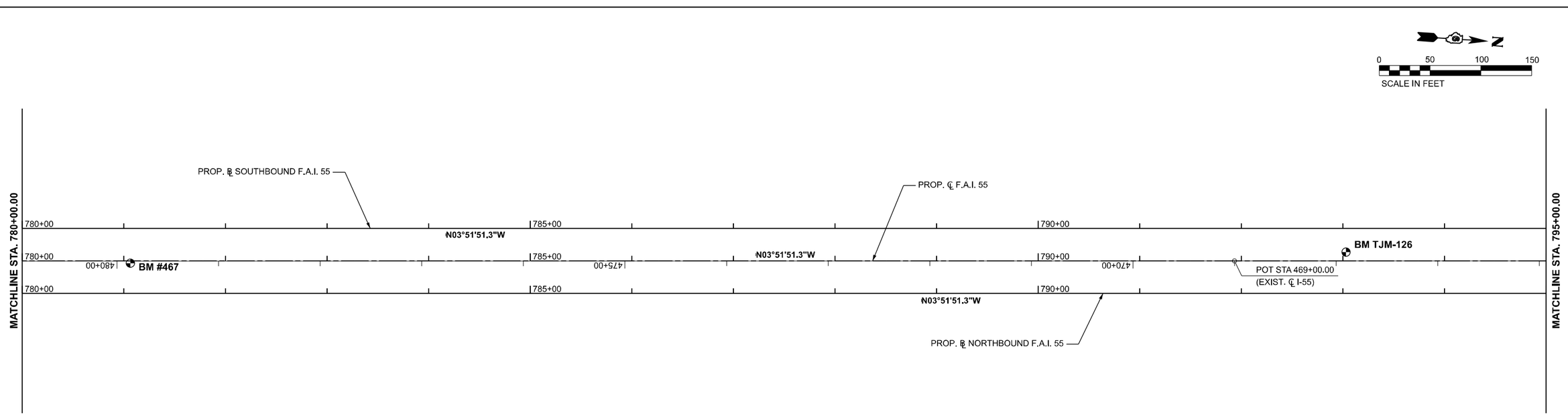

MODEL: PR_I55 - ATB-Plan01 [Sheet]
FILE NAME: pw://cmtengr-pw.bentley.com:cmt-connect-projects/Documents/IDOT/21004103-40/41030/Sheets/72K98/0572K98-sht-ATB.dgn

CMT
License No. 184-000613

USER NAME = rheady	DESIGNED - MJO	REVISED -	
	DRAWN - RAH	REVISED -	
PLOT SCALE = 0.16660000 ' / in.	CHECKED - KLT	REVISED -	
PLOT DATE = 3/25/2024	DATE - MARCH 2024	REVISED -	

STATE OF ILLINOIS
DEPARTMENT OF TRANSPORTATION

FAI ROUTE 55 - INTERSTATE 55
ALIGNMENT, TIES AND BENCHMARKS

SCALE: 1" = 50' | SHEET 1 OF 3 SHEETS | STA. 765+00 TO STA. 795+00

F.A.I. RTE.	SECTION	COUNTY	TOTAL SHEETS	SHEET NO.
55	(84-2BR-1) D, BY, BP, BRR	SANGAMON	139	16
		CONTRACT NO. 72K98		
	ILLINOIS	FED. AID PROJECT		

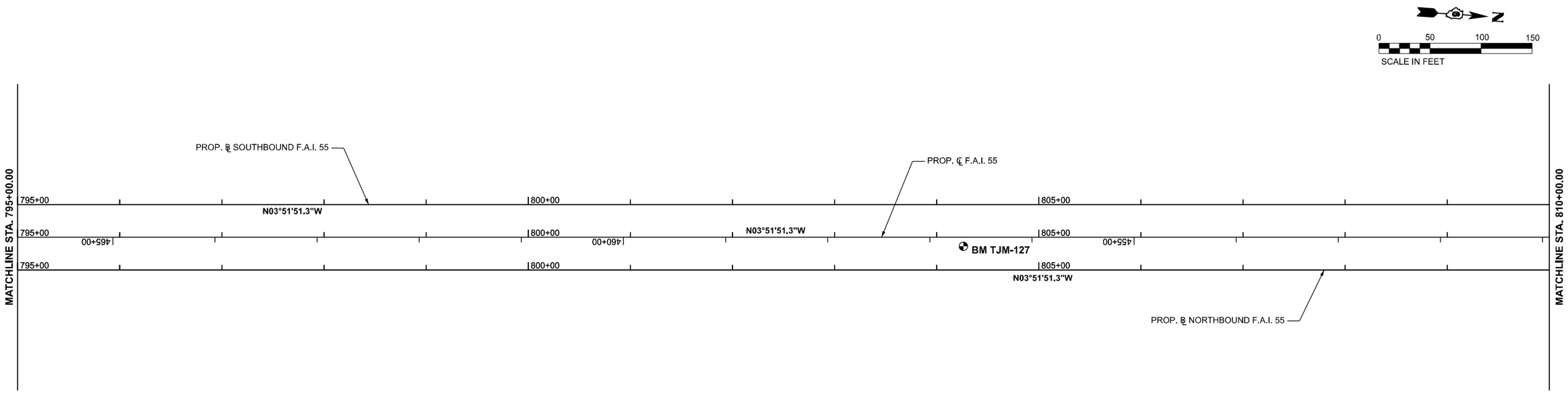

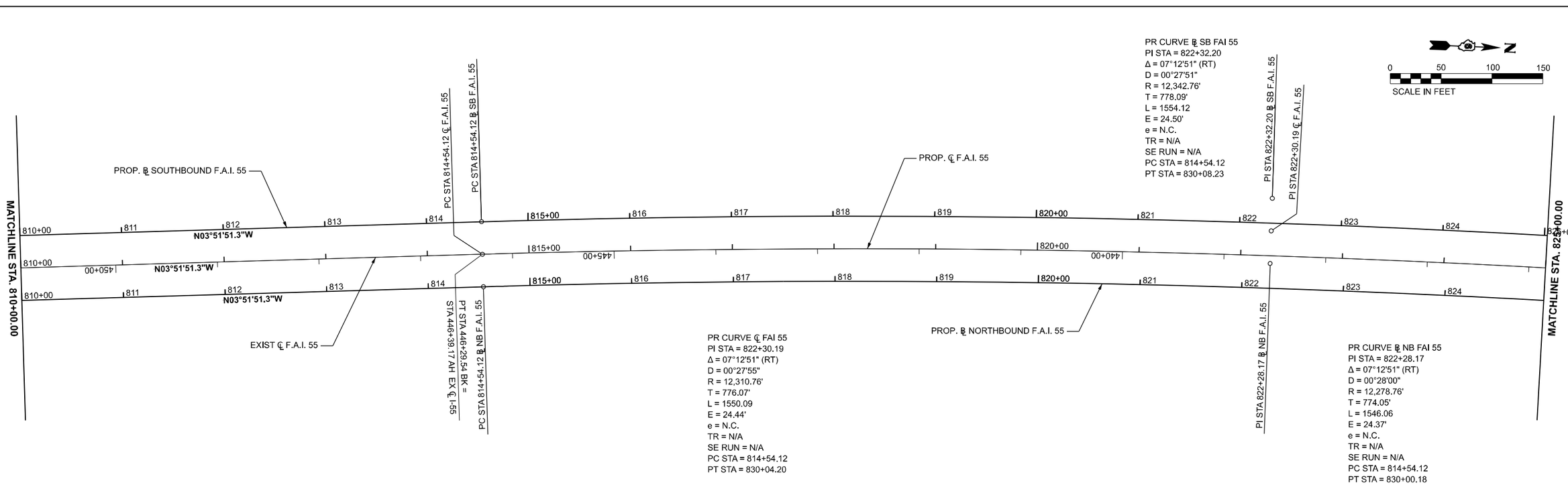

MODEL: PR_I55 - ATB-Plan03 [Sheet]
FILE NAME: pw://cmeng-pw.bentley.com:cmeng-connect-eu-projects/Documents/DOT21004 1034004 1030/Sheets/72K98/D672K98-sht-ATB.dgn

CMT
License No. 184-000613
© Copyright CMT, Inc.

USER NAME = rheady	DESIGNED - MJO	REVISED -	
	DRAWN - RAH	REVISED -	
PLOT SCALE = 0.16660000 ' / in.	CHECKED - KLT	REVISED -	
PLOT DATE = 3/25/2024	DATE - MARCH 2024	REVISED -	

STATE OF ILLINOIS
DEPARTMENT OF TRANSPORTATION

FAI ROUTE 55 - INTERSTATE 55
ALIGNMENT, TIES AND BENCHMARKS

SCALE: 1" = 50' | SHEET 2 OF 3 SHEETS | STA. 795+00 TO STA. 825+00

F.A.I. RTE.	SECTION	COUNTY	TOTAL SHEETS	SHEET NO.
55	(84-2BR-1) D, BY, BP, BRR	SANGAMON	139	17
		CONTRACT NO. 72K98		
	ILLINOIS	FED. AID PROJECT		

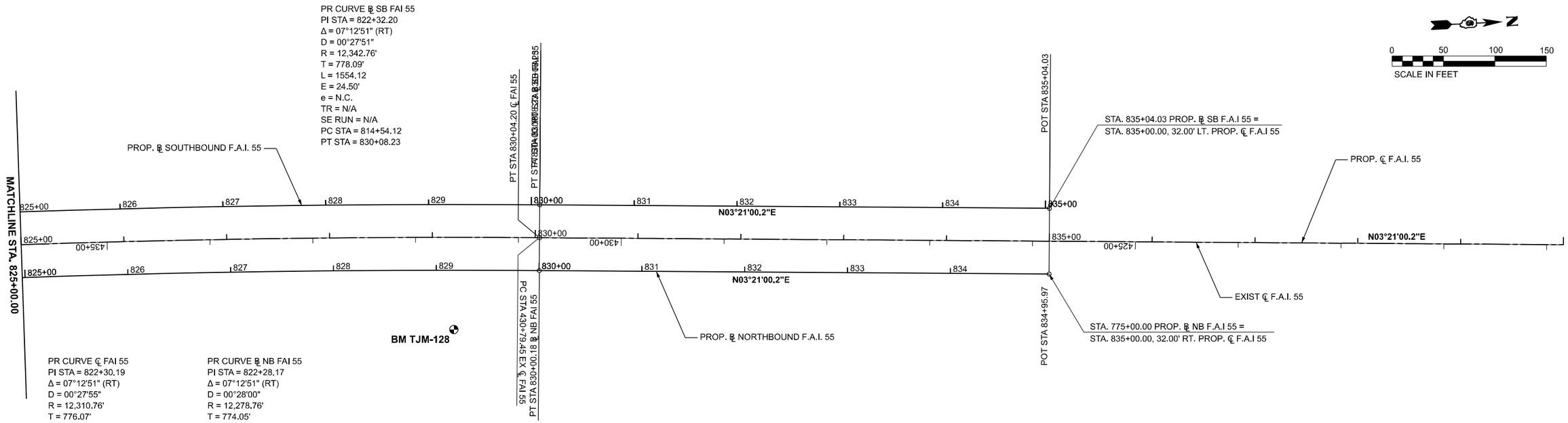

D672K98 Traverse Station			NAD83/1997 adj State Plane IL West Zone			
POINT	NORTHING	EASTING	STATION	OFFSET	DESCRIPTION	ALIGNMENT
TM1000	1166981.762	2456710.289	791+93.26	0.0	#4 REBAR W ALUMINUM	I-55NEWSTA
TM1004	1167101.059	2456701.424	793+12.89	0.8 LT	PK NAIL	I-55NEWSTA
TJM1005	1168197.490	2456628.229	804+11.76	0.1 RT	PK NAIL	I-55NEWSTA
380	1175809.871	2456845.570	880+36.19	0.6 RT	#5 REBAR	I-55NEWSTA
370	1176793.893	2457012.122	890+36.26	0.0	#5 REBAR	I-55NEWSTA

D672K98 Benchmarks					
Benchmark	NAVD 88 Datum	Description	Station	Offset	Chain
	Elevation in Feet				
BM 108	561.811	Chsld [] in NE corner of headwall to inlet box between NBL I-55 & ramp N of rest area	777+95.84	76.6 RT	I-55NEWSTA
BM 476	553.481	Chsld [] in NE corner of gate inlet foundation at CL median; 0.23 mile S of the S abut to Sangamon River Bridge	781+06.45	2.3 RT	I-55NEWSTA
BM TJM-126	539.790	Chsld [] on SE Abutment of SBL Sangamon River Bridge	793+03.09	8.7 LT	I-55NEWSTA
BM TJM-127	539.794	Chsld [] on NW abutment of NBL Sangamon River Bridge	804+26.11	8.8 RT	I-55NEWSTA
BM TJM-128	555.038	Chsld [] in W conc sign fndtn (camping exit 105) on E side of I-55; 0.47 mi N of N Abut to Sangamon River Bridge	829+20.92	89.7 RT	I-55NEWSTA

MODEL: PR_I55 - ATB-Plan05 [Sheet]
FILE NAME: pw://cmtengpw.bentley.com:cmt-connect-eng/projects/Documents/DOT21004 1034/2041030/Sheets/72K98/D672K98-sh-ATB.dgn

CMT
License No. 184-000613

USER NAME = rheady	DESIGNED - MJO	REVISED -
	DRAWN - RAH	REVISED -
PLOT SCALE = 0.16660000 ' / in.	CHECKED - KLT	REVISED -
PLOT DATE = 3/25/2024	DATE - MARCH 2024	REVISED -

STATE OF ILLINOIS
DEPARTMENT OF TRANSPORTATION

FAI ROUTE 55 - INTERSTATE 55
ALIGNMENT, TIES AND BENCHMARKS

SCALE: 1" = 50' | SHEET 3 OF 3 SHEETS | STA. 825+00 TO STA. 840+00

F.A.I. RTE.	SECTION	COUNTY	TOTAL SHEETS	SHEET NO.
55	(84-2BR-1) D, BY, BP, BRR	SANGAMON	139	18
		CONTRACT NO. 72K98		
	ILLINOIS	FED. AID PROJECT		

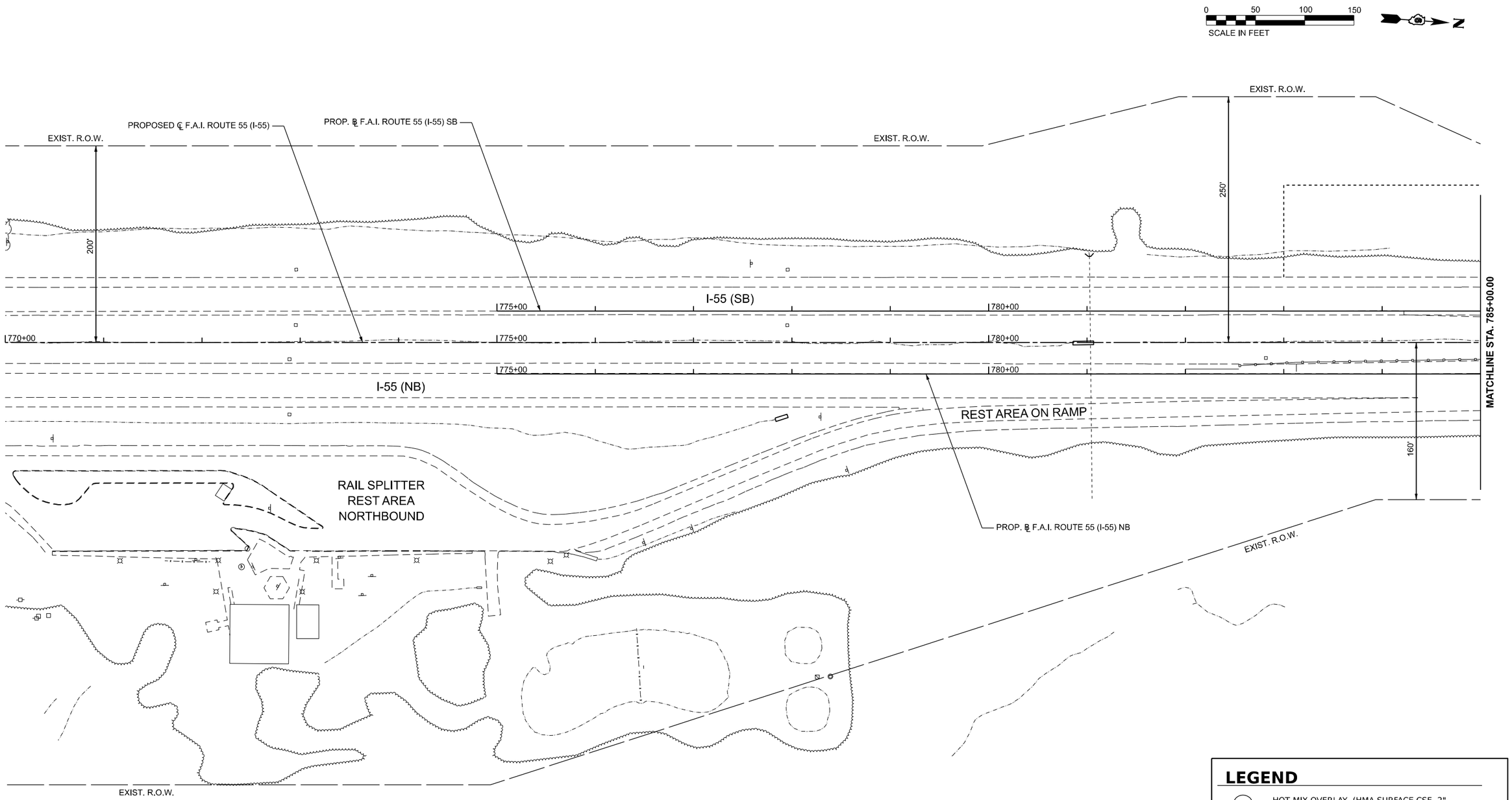

LEGEND

- (A) HOT-MIX OVERLAY, (HMA SURFACE CSE, 2" HMA BINDER CSE, VAR. DEPTH)
- (B) TEMPORARY CONCRETE BARRIER (TO REMAIN PERMANENTLY)
- (C) IMPACT ATTENUATOR (FULLY REDIRECTIVE, NARROW), TEST LEVEL 3 (SPECIAL)
- (D) PROP. GUARDRAIL, TYPE A
- (E) TRAFFIC BARRIER TERMINAL, TYPE 1 (SPL) TANGENT
- (F) TRAFFIC BARRIER TERMINAL, TYPE 6

MODEL: PR_I55 - I55-2Ph(ln0) [Sheet]
FILE NAME: pw://contengpw.bentley.com:contengpw-cont-projects/Documents/IDOT/21004103-004103/Sheets/72K98/D072K98sec1ln2PNP-ln1.dgn

USER NAME = rheady	DESIGNED - VJR	REVISED -	
	DRAWN - RAH	REVISED -	
PLOT SCALE = 0.16666667 ' / in.	CHECKED - KLT	REVISED -	
PLOT DATE = 3/25/2024	DATE - MARCH 2024	REVISED -	

STATE OF ILLINOIS
DEPARTMENT OF TRANSPORTATION

FAI ROUTE 55 - INTERSTATE 55
PLAN AND PROFILES SHEETS

SCALE: 1" = 50' | SHEET 1 OF 8 SHEETS | STA. 770+00 TO STA. 785+00

F.A.I. RTE.	SECTION	COUNTY	TOTAL SHEETS	SHEET NO.
55	(84-2BR-1) D, BY, BP, BRR	SANGAMON	139	19
		CONTRACT NO. 72K98		
		ILLINOIS	FED. AID PROJECT	

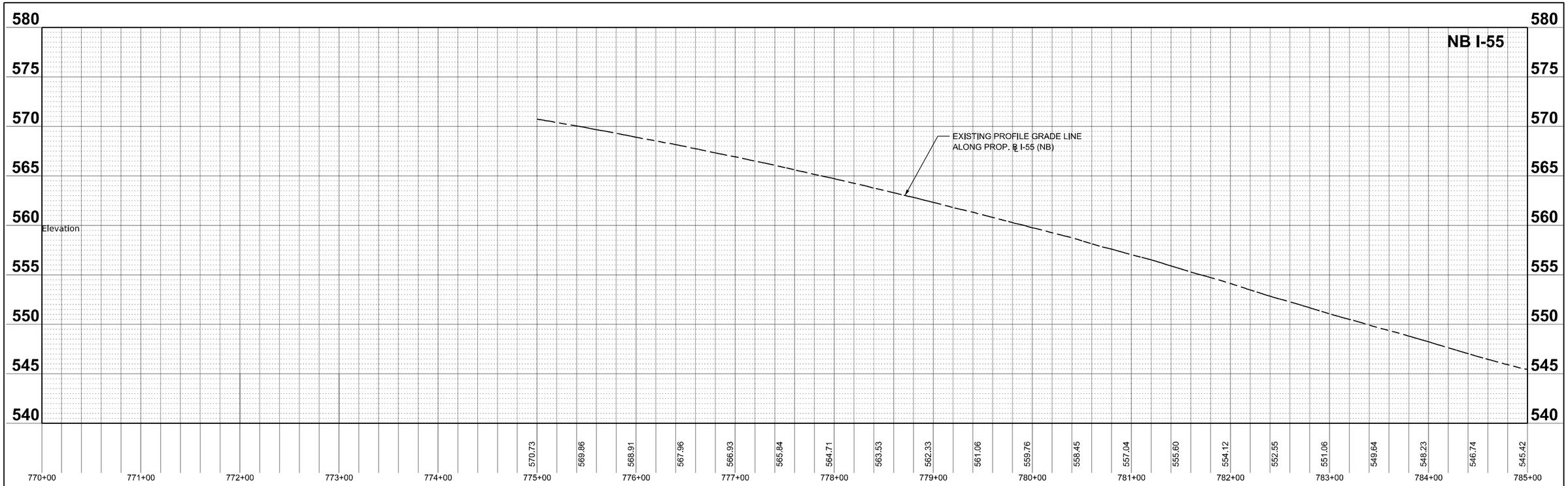

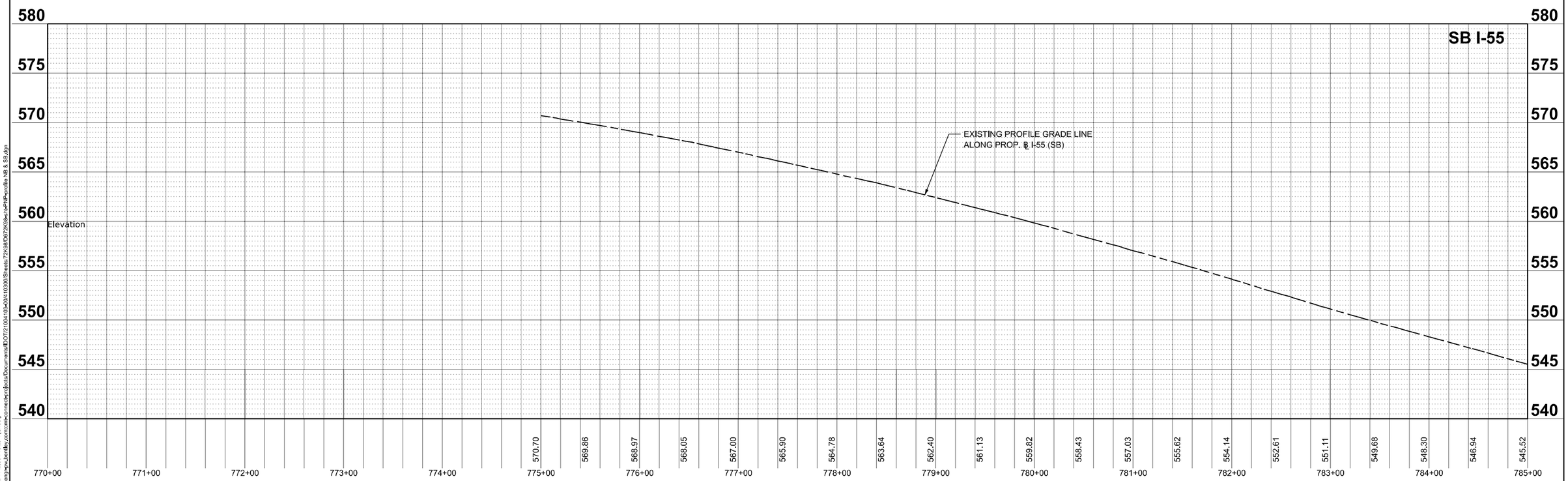

MODEL: PrBL_I55_NB - NB55-Profile 1 [Sheet]
FILE NAME: pw://cmeng-pw.bentley.com:cmeng-connect-projects/Documents/IDOT/21004103-40041030/Sheets/72K98/D972K98-sht-PNP-profile NB & SB.dgn

USER NAME = rheady	DESIGNED - VJR	REVISED -	
	DRAWN - RAH	REVISED -	
PLOT SCALE = 0.16666667 ' / in.	CHECKED - KLT	REVISED -	
PLOT DATE = 3/25/2024	DATE - MARCH 2024	REVISED -	

STATE OF ILLINOIS
DEPARTMENT OF TRANSPORTATION

FAI ROUTE 55 - INTERSTATE 55
PLAN AND PROFILE SHEETS

SCALE: 1" = 50' | SHEET 2 OF SHEETS | STA. 770+00 TO STA. 785+00

F.A.I. RTE.	SECTION	COUNTY	TOTAL SHEETS	SHEET NO.
55	(84-2BR-1) D, BY, BP, BRR	SANGAMON	139	20
		CONTRACT NO. 72K98		
		ILLINOIS	FED. AID PROJECT	

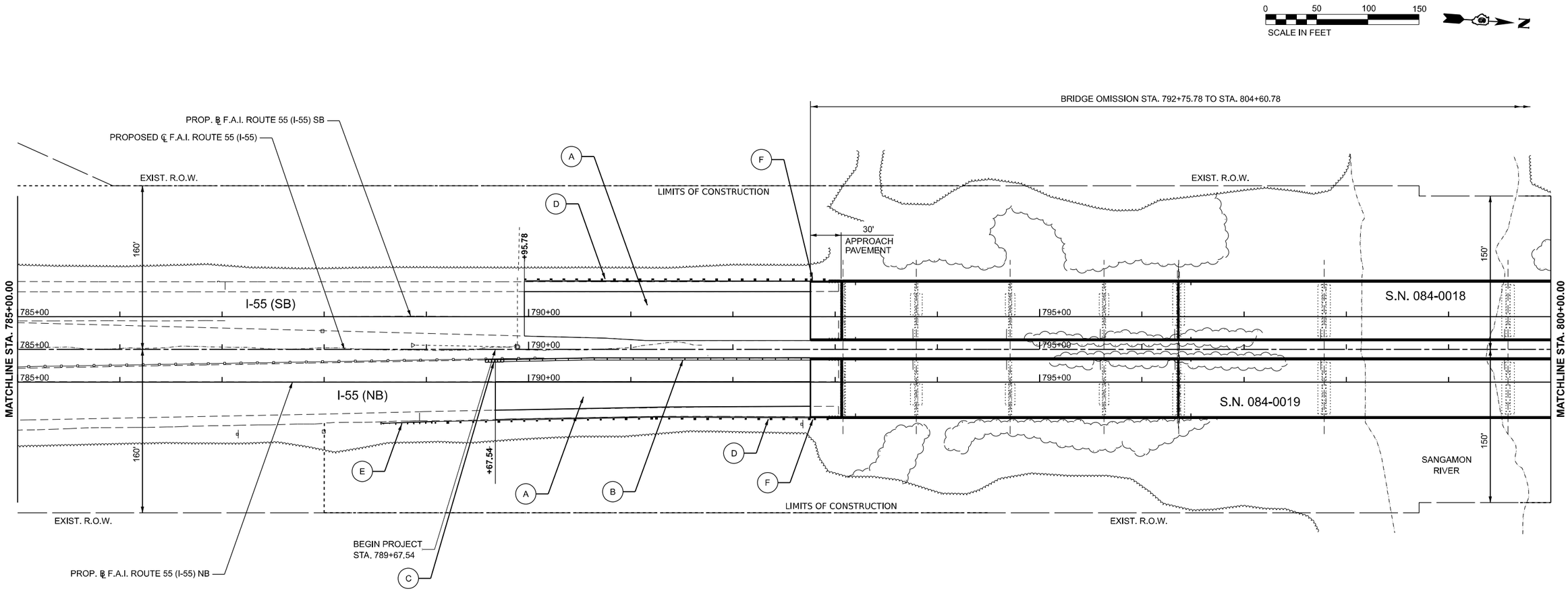

LEGEND

A	HOT-MIX OVERLAY, (HMA SURFACE CSE, 2" HMA BINDER CSE, VAR. DEPTH)
B	TEMPORARY CONCRETE BARRIER (TO REMAIN PERMANENTLY)
C	IMPACT ATTENUATOR (FULLY REDIRECTIVE, NARROW), TEST LEVEL 3 (SPECIAL)
D	PROP. GUARDRAIL, TYPE A
E	TRAFFIC BARRIER TERMINAL, TYPE 1 (SPL) TANGENT
F	TRAFFIC BARRIER TERMINAL, TYPE 6

MODEL: PR_I55-I55-Plan02 [Sheet]
FILE NAME: pw:\\mwrdgpw.bentley.com:mwrdgpw\Projects\Documents\DOT\21004105-0041030\Sheets\72K98\D972K98sht-PNP-plan.dgn

USER NAME = rheady	DESIGNED - VJR	REVISED -	
	DRAWN - RAH	REVISED -	
PLOT SCALE = 0.16666667 ' / in.	CHECKED - KLT	REVISED -	
PLOT DATE = 3/25/2024	DATE - MARCH 2024	REVISED -	

STATE OF ILLINOIS
DEPARTMENT OF TRANSPORTATION

FAI ROUTE 55 - INTERSTATE 55
PLAN AND PROFILE SHEETS

SCALE: 1" = 50' | SHEET 3 OF 8 SHEETS | STA. 785+00 TO STA. 800+00

F.A.I. RTE.	SECTION	COUNTY	TOTAL SHEETS	SHEET NO.
55	(84-2BR-1) D, BY, BP, BRR	SANGAMON	139	21
		CONTRACT NO. 72K98		
		ILLINOIS	FED. AID PROJECT	

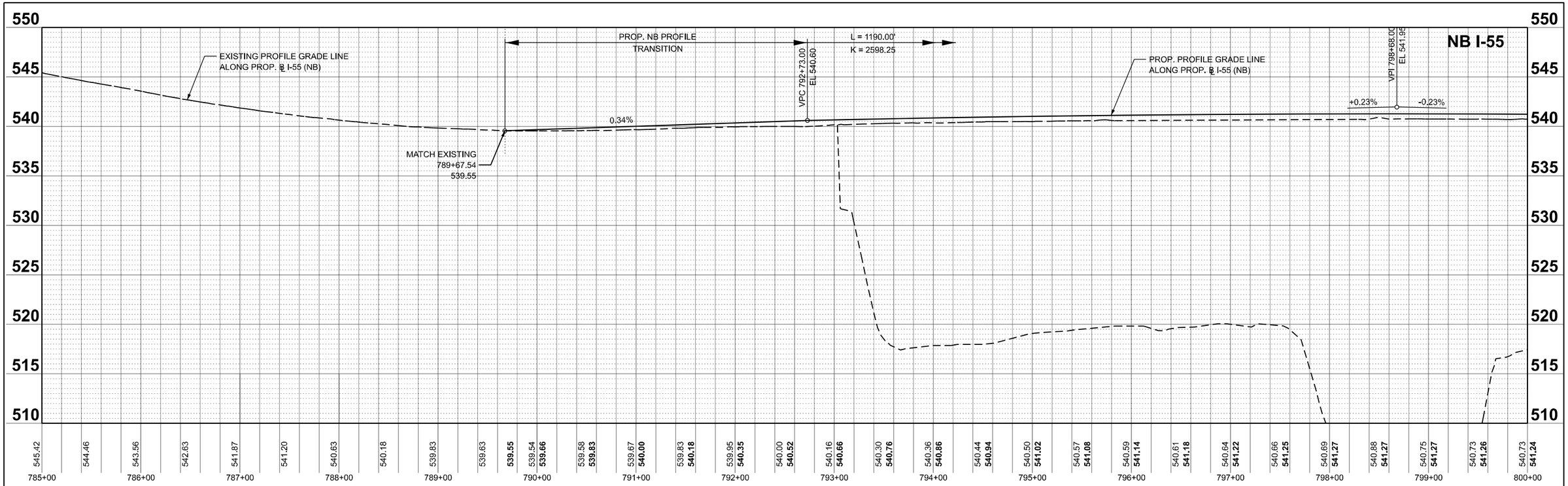

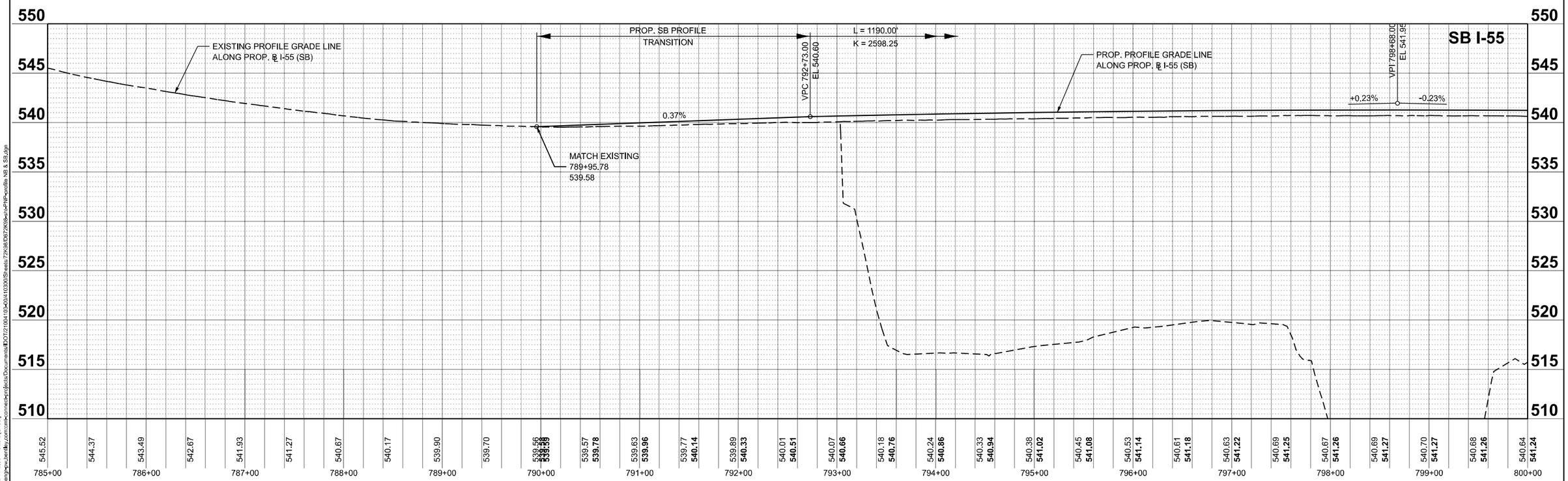

MODEL: PrBL_I55_NB - NB55-Profile 2 [Sheet]
FILE NAME: pw://cmengp-pw.bentley.com:cmengp-connect-projects/Documents/IDOT21004103-40414103OS/Sheets/72K98/D972K98-sht-PNP-profile NB & SB.dgn

USER NAME = rheady	DESIGNED - VJR	REVISED -	
	DRAWN - RAH	REVISED -	
PLOT SCALE = 0.16666667 ' / in.	CHECKED - KLT	REVISED -	
PLOT DATE = 3/25/2024	DATE - MARCH 2024	REVISED -	

STATE OF ILLINOIS
DEPARTMENT OF TRANSPORTATION

FAI ROUTE 55 - INTERSTATE 55
PLAN AND PROFILE SHEETS

SCALE: 1" = 50' | SHEET 4 OF SHEETS | STA. 785+00 TO STA. 800+00

F.A.I. RTE.	SECTION	COUNTY	TOTAL SHEETS	SHEET NO.
55	(84-2BR-1) D, BY, BP, BRR	SANGAMON	139	22
		CONTRACT NO. 72K98		
		ILLINOIS	FED. AID PROJECT	

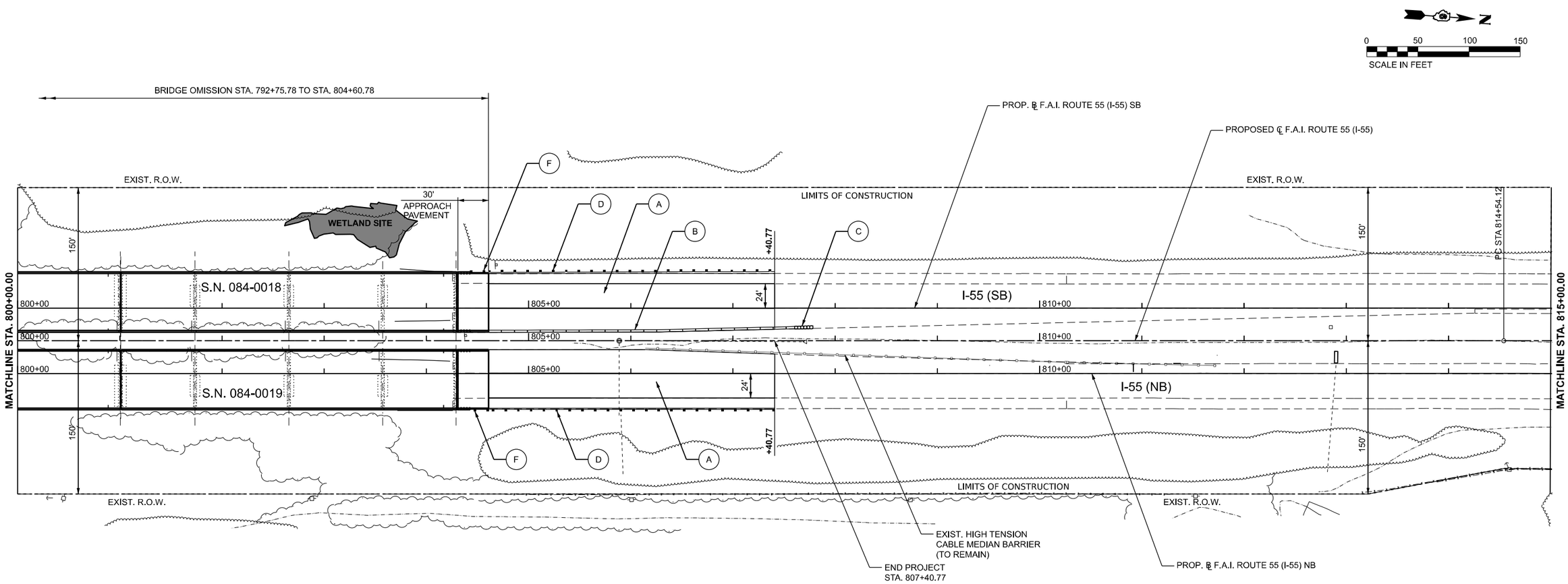

PR CURVE ℄ FAI 55
PI STA = 822+30.19
Δ = 07°12'51" (RT)
D = 00°27'55"
R = 12,310.76'
T = 776.07'
L = 1550.09
E = 24.44'
e = N.C.
TR = N/A
SE RUN = N/A
PC STA = 814+54.12
PT STA = 830+04.20

LEGEND

A	HOT-MIX OVERLAY, (HMA SURFACE CSE, 2" HMA BINDER CSE, VAR. DEPTH)
B	TEMPORARY CONCRETE BARRIER (TO REMAIN PERMANENTLY)
C	IMPACT ATTENUATOR (FULLY REDIRECTIVE, NARROW), TEST LEVEL 3 (SPECIAL)
D	PROP. GUARDRAIL, TYPE A
E	TRAFFIC BARRIER TERMINAL, TYPE 1 (SPL) TANGENT
F	TRAFFIC BARRIER TERMINAL, TYPE 6

MODEL: PR_I55 - I55-PlanR3 [Sheet]
FILE NAME: pw://contengpw.bentley.com:carb-connect-projects/Documents/IDOT/210041/0300/Sheets/72K98/B72K98-sht-PNP-plan.dgn

USER NAME = rheady	DESIGNED - VJR	REVISED -	
	DRAWN - RAH	REVISED -	
PLOT SCALE = 0.16666667 ' / in.	CHECKED - KLT	REVISED -	
PLOT DATE = 3/25/2024	DATE - MARCH 2024	REVISED -	

STATE OF ILLINOIS
DEPARTMENT OF TRANSPORTATION

FAI ROUTE 55 - INTERSTATE 55
PLAN AND PROFILE SHEET

SCALE: 1" = 50' | SHEET 3 OF 8 SHEETS | STA. 800+00 TO STA. 815+00

F.A.I. RTE.	SECTION	COUNTY	TOTAL SHEETS	SHEET NO.
55	(84-2BR-1) D, BY, BP, BRR	SANGAMON	139	23
		CONTRACT NO. 72K98		
		ILLINOIS FED. AID PROJECT		

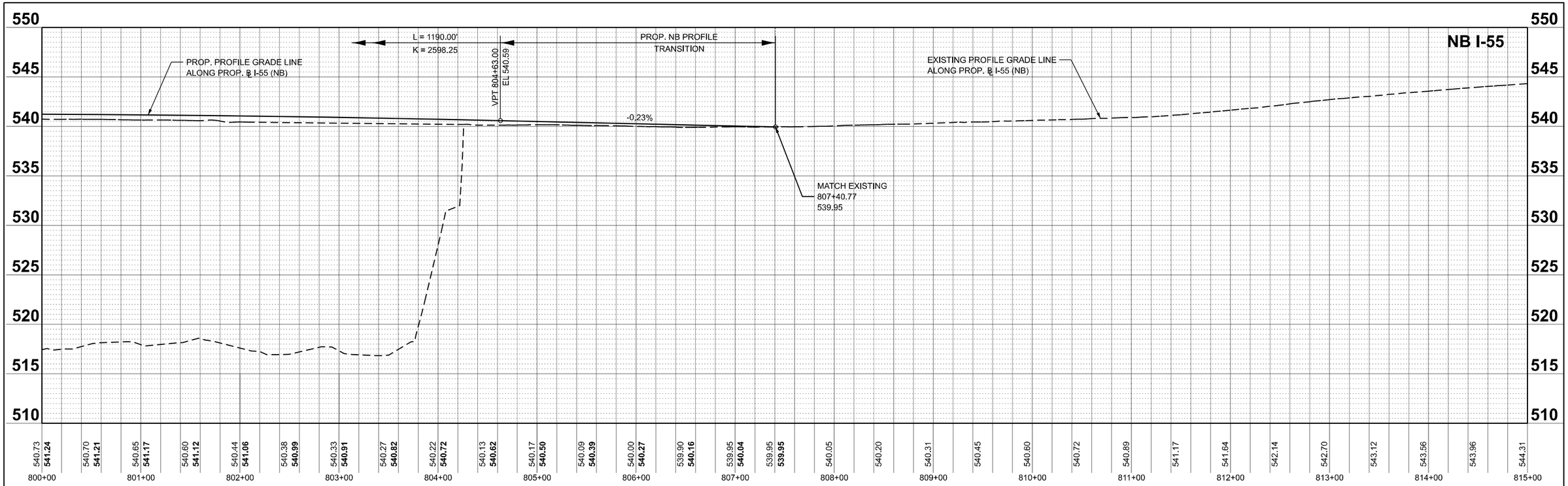

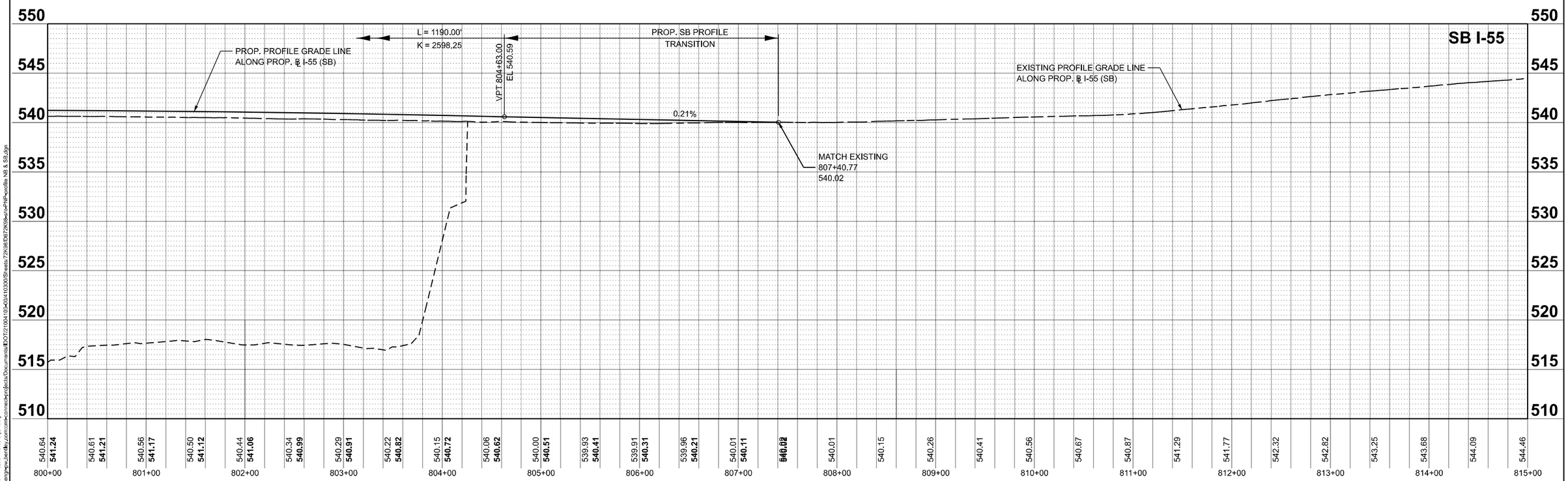

MODEL: PrBL_I55_NB - NB55-Profile 3 [Sheet]
FILE NAME: pw://cmengp-pw.bentley.com:cmet-connect-projects/Documents/D0T21004103-40141030/Sheets/72K98/D0T72K98-sht-PNP-profile NB & SB.dgn

USER NAME = rheady	DESIGNED - VJR	REVISED -	
	DRAWN - RAH	REVISED -	
PLOT SCALE = 0.16666667 ' / in.	CHECKED - KLT	REVISED -	
PLOT DATE = 3/28/2024	DATE - MARCH 2024	REVISED -	

STATE OF ILLINOIS
DEPARTMENT OF TRANSPORTATION

FAI ROUTE 55 - INTERSTATE 55
PLAN AND PROFILE SHEETS

SCALE: 1" = 50' | SHEET 6 OF SHEETS | STA. 800+00 TO STA. 815+00

F.A.I. RTE.	SECTION	COUNTY	TOTAL SHEETS	SHEET NO.
55	(84-2BR-1) D, BY, BP, BRR	SANGAMON	139	24
		CONTRACT NO. 72K98		
		ILLINOIS	FED. AID PROJECT	

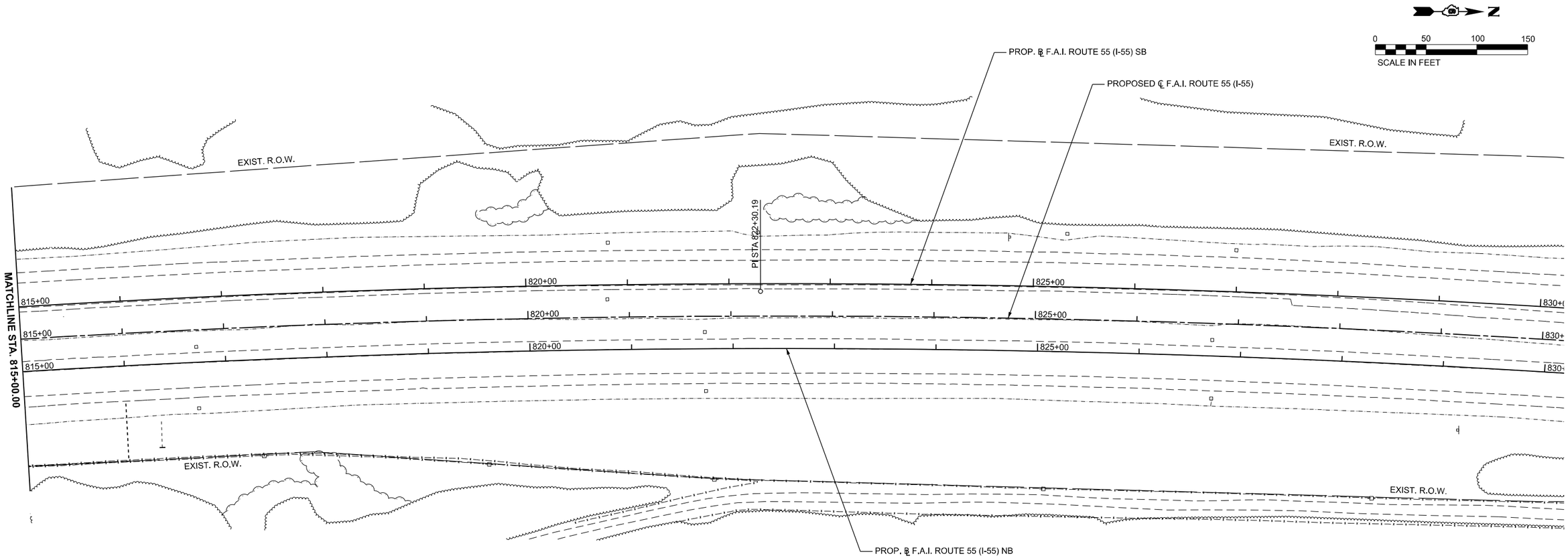

PR CURVE ℄ FAI 55
PI STA = 822+30.19
Δ = 07°12'51" (RT)
D = 00°27'55"
R = 12,310.76'
T = 776.07'
L = 1550.09
E = 24.44'
e = N.C.
TR = N/A
SE RUN = N/A
PC STA = 814+54.12
PT STA = 830+04.20

LEGEND

- (A) HOT-MIX OVERLAY, (HMA SURFACE CSE, 2" HMA BINDER CSE, VAR. DEPTH)
- (B) TEMPORARY CONCRETE BARRIER (TO REMAIN PERMANENTLY)
- (C) IMPACT ATTENUATOR (FULLY REDIRECTIVE, NARROW), TEST LEVEL 3 (SPECIAL)
- (D) PROP. GUARDRAIL, TYPE A
- (E) TRAFFIC BARRIER TERMINAL, TYPE 1 (SPL) TANGENT
- (F) TRAFFIC BARRIER TERMINAL, TYPE 6

MODEL: PR_I55 - I55-Plan04 [Sheet]
FILE NAME: pw://imsinge-pw.bentley.com:imsinge-connect-sc/projects/Documents/IDOT/21004/10340/04/10300/Sheets/72K98/0472K98-sht-PNP-Plan.dgn

USER NAME = rheady	DESIGNED - VJR	REVISED -	
	DRAWN - RAH	REVISED -	
PLOT SCALE = 0.16666667 ' / in.	CHECKED - KLT	REVISED -	
PLOT DATE = 3/25/2024	DATE - MARCH 2024	REVISED -	

STATE OF ILLINOIS
DEPARTMENT OF TRANSPORTATION

FAI ROUTE 55 - INTERSTATE 55
PLAN AND PROFILE SHEETS

SCALE: 1" = 50' | SHEET 7 OF SHEETS | STA. 815+00 TO STA. 830+00

F.A.I. RTE.	SECTION	COUNTY	TOTAL SHEETS	SHEET NO.
55	(84-2BR-1) D, BY, BP, BRR	SANGAMON	139	25
		CONTRACT NO. 72K98		
	ILLINOIS	FED. AID PROJECT		

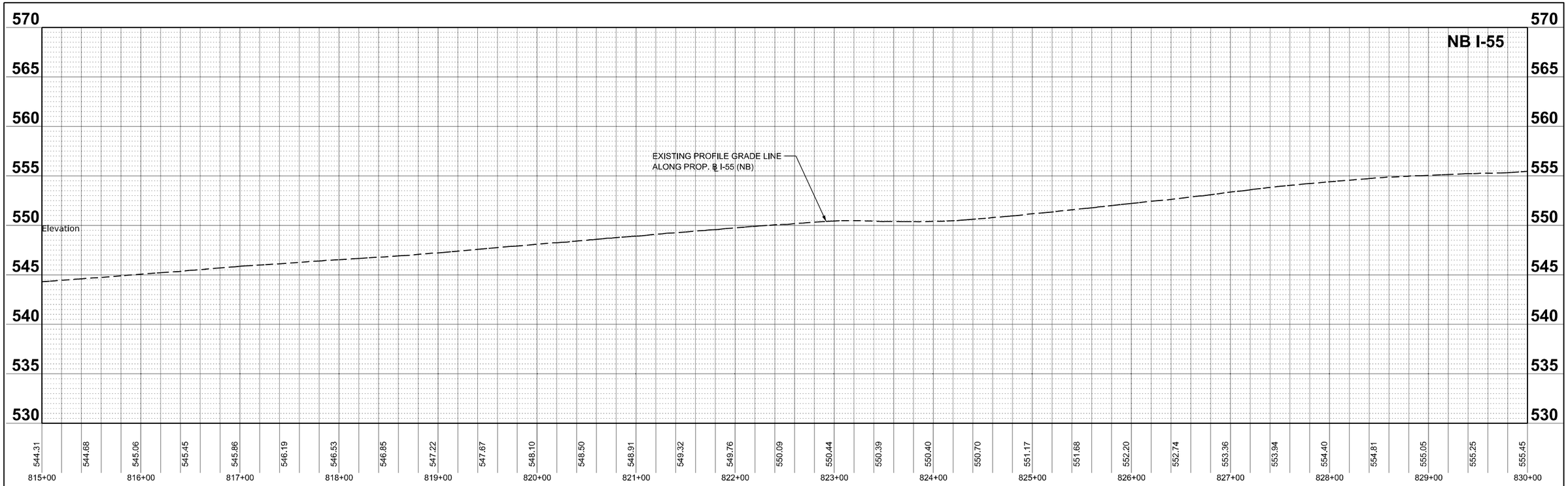

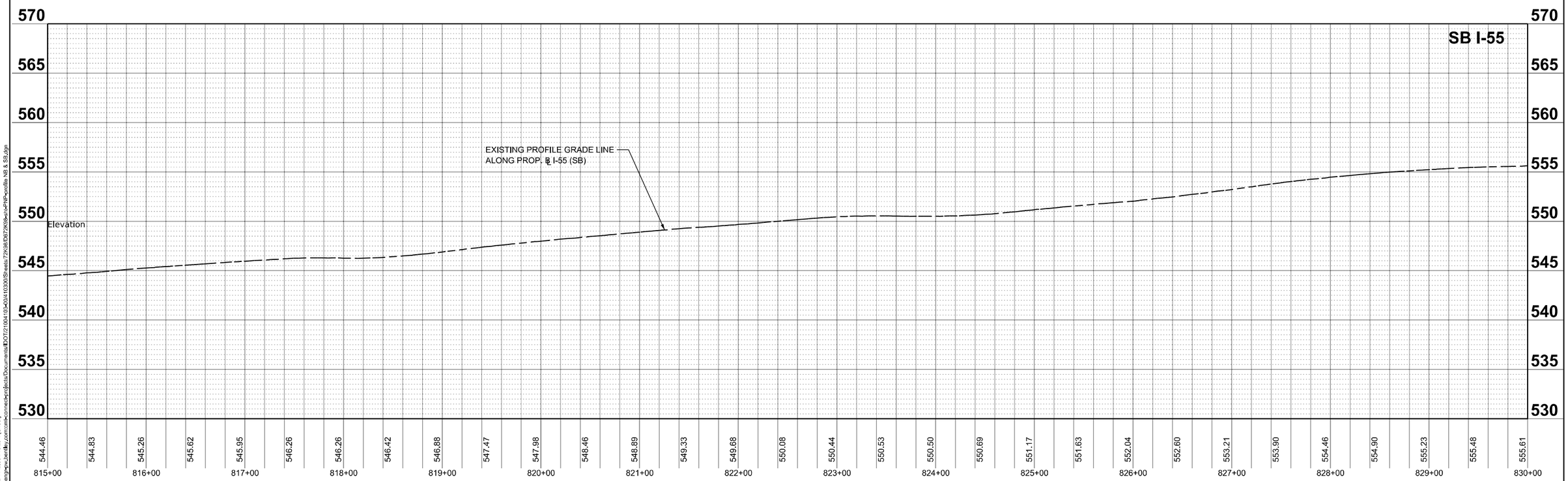

MODEL: PrBL_I55_NB - NB55-Profile 4 [Sheet]
FILE NAME: pw://cmengy-pw.bentley.com:cmengy-connect-projects/Documents/D07210041040410300/Sheets/72K98/D072K98-sht-PNP-profile NB & SB.dgn

USER NAME = rheady	DESIGNED - VJR	REVISED -	
	DRAWN - RAH	REVISED -	
PLOT SCALE = 0.16666667 ' / in.	CHECKED - KLT	REVISED -	
PLOT DATE = 3/25/2024	DATE - MARCH 2024	REVISED -	

STATE OF ILLINOIS
DEPARTMENT OF TRANSPORTATION

FAI ROUTE 55 - INTERSTATE 55
PLAN AND PROFILE SHEETS

SCALE: 1" = 50' | SHEET 8 OF SHEETS | STA. 815+00 TO STA. 830+00

F.A.I. RTE.	SECTION	COUNTY	TOTAL SHEETS	SHEET NO.
55	(84-2BR-1) D, BY, BP, BRR	SANGAMON	139	26
		CONTRACT NO. 72K98		
		ILLINOIS FED. AID PROJECT		

TRAFFIC CONTROL GENERAL NOTES

1. THE TRAFFIC CONTROL PLANS SHALL SERVE AS A GUIDE FOR THE SAFE DIVERSION OF TRAFFIC DURING EXECUTION OF THIS CONTRACT. HOWEVER, THE CONCTRACTOR MAY MODIFY THE TRAFFIC CONTROL PLANS TO MEET CONSTRUCTION NEEDS BUT NOT AT THE EXPENSE OF PUBLIC SAFETY OR CONVENIENCE. ANY CHANGES TO THE TRAFFIC CONTROL PLANS SHALL BE SUBMITTED TO THE ENGINEER FOR APPROVAL.

2. ALL EXISTING PAVEMENT MARKINGS IN CONFLICT WITH THE TRAFFIC CONTROL STRIPING SHALL BE REMOVED. THIS WORK WILL BE PAID FOR AT THE CONTRACT UNIT PRICE PER SQUARE FOOT TO "PAVEMENT MARKING REMOVAL - WATER BLASTING".

3. ALL EXISTING REFLECTIVE PAVEMENT MARKING REFLECTOR IN CONFLICT WITH THE TRAFFIC CONTROL STRIPING SHALL BE REMOVED OUT OF EXISTING CASTINGS LOCATED IN THE PAVEMENT, THIS WORK WILL BE PAID FOR AT THE CONTRACT UNIT PRICE FOR "RAISED REFLECTIVE PAVEMENT MARKER, REFLECTOR REMOVAL".

4. THE CONTRACTOR SHALL REMOVE ALL TEMPORARY PAVEMENT MARKING WHICH CONFLICTS WITH THE NEXT STAGE OR FINAL STRIPING.

5. ALL TRAFFIC CONTROL DEVICES USED FOR TRAFFIC CONTROL, AS DETAILED ON THE PLANS, OR HIGHWAY STANDARD SHALL BE REFLECTORIZED PRIOR TO INSTALLATION AND CLEANED AS SPECIFIED IN THE TRAFFIC CONTROL SPECIAL PROVISIONS OR AS DIRECTED BY THE ENGINEER.

6. ALL EXISTING SIGNS WITHIN THE LIMITS OF TRAFFIC CONTROL WHICH ARE OBSCURED BY OR OTHERWISE INTERFERED WITH BY THE CONSTRUCTION OPERATIONS OR DESIGNATED TRAFFIC CONTROL, SHALL BE COVERED OR REMOVED BY THE CONTRACTOR UNLESS SPECIFIED IN THE PLANS OR WHEN DIRECTED BY THE ENGINEER. THIS WORK SHALL BE IN ACCORDANCE WITH ARTICLE 107.25 OF THE IDOT STANDARD SPECIFICATIONS.

7. THE CONTRACTOR SHALL PLACE CHANGEABLE MESSAGE SIGNS IN ADVANCE OF THE WORK AREA FOR NORTHBOUND AND SOUTHBOUND I-55 WORK AS WELL AS AT LOCATIONS DESCRIBED IN THE PROJECT SPECIAL PROVISIONS. THIS WORK SHALL BE PAID FOR AT THE CONTRACT UNIT PRICE PER CALENDAR DAY FOR "CHANGEABLE MESSAGE SIGN", OTHER TEMPORARY SIGNS SHALL BE INCIDENTAL TO THE APPLICABLE TRAFFIC CONTROL STANDARD.

8. FOR ADDITIONAL BRIDGE CONSTRUCTION STAGING INFORMATION, SEE STRUCTURAL PLANS.

9. THE CONTRACTOR SHALL CONTACT THE DISTRICT 6 TRAFFIC CONTROL SECTION OF THE BUREAU OF OPERAIOTNS AT (217) 785-5306 AT LEAST 21 DAYS PRIOR TO IMPLEMENTING PRESTAGE TRAFFIC CONTROL AND A MINIMUM OF 48 HOURS PRIOR TO A SWITCH IN TRAFFIC STAGING.

SUGGESTED SEQUENCE OF CONSTRUCTION

PRESTAGE

1. INSTALL CHANGEABLE MESSAGE SIGN NORTH AND SOUTH OF PROJECT LIMITS ON I-55 IN ACCORDANCE WITH THE SPECIAL PROVISIONS AND AS DIRECTED BY THE ENGINEER. THE CHANGEABLE MESSAGE SIGN SHALL REMAIN IN PLACE FOR THE DURATION OF STAGES 1 AND 2.

2. THE CONTRACTOR SHALL PLACE ALL SIGNAGE AND DEVICES PRIOR TO BEGINNING ANY PRESTAGE CONSTRUCTION IN ACCORDANCE WITH IDOT STANDARDS 701400, 71401, 701411, 701428 AND AS DETAILED IN THE PLANS OR AS DIRECTED BY THE ENGINEER.

3. CONTRACTOR SHALL COORDINATE REMOVAL OF TEMPORARY CONCRETE BARRIER AND IMPACT ATTENUATORS REMAINING FROM PREVIOUS CONTRACT AS INDICATED IN THE PROJECT SPECIAL PROVISIONS.

STAGE 1

1. THE CONTRACTOR SHALL MAKE ALL ADJUSTMENTS TO PRESTAGE SIGNAGE AND TRAFFIC CONTROL DEVICES, SUCH AS ERECTING THE TEMPORARY CONCRETE BARRIER AND TEMPORARY IMPACT ATTENUATORS AS REQUIRED PRIOR TO BEGINNING STAGE I CONSTRUCTION. PLACEMENT OF ALL SIGNAGE AND TRAFFIC CONTROL DEVICES PRIOR TO STAGE I CONSTRUCTION SHALL BE IN ACCORDANCE WITH IDOT STANDARDS 701400, 701402, 701411, 701428 AND AS DETAILED IN THE PLANS OR DIRECTED BY THE ENGINEER.

2. THE INSIDE NORTHBOUND AND SOUTHBOUND LANE AND INSIDE SHOULDERS WILL BE CLOSED DURING STAGE I SHIFT TRAFFIC TO OUTSIDE LANE AND SHOULDERS TO ALLOW FOR CONSTRUCTION OF THE BRIDGE WIDENING AND HMA OVERLAY FOR PAVEMENT PROFILE TRANSITIONS.

3. REFER TO CONSTRUCTION DETAILS SHEET FOR INTERIM STAGE RAMP PAVING DETAIL.

STAGE 2

1. THE CONTRACTOR SHALL PLACE ALL SIGNAGE AND DEVICES INCLUDING ADJUSTMENTS TO TEMPORARY CONCRETE BARRIERS AND IMPACT ATTENUATORS PRIOR TO BEGINNING STAGE 2 CONSTRUCTION, IN ACCORDANCE WITH IDOT STANDARDS 701400, 701402, 701411, 701428 AND AS DETAILED IN THE PLANS OR DIRECTED BY THE ENGINEER.

2. THE OUTSIDE SOUTHBOUND LANE AND SHOULDER WILL BE CLOSED AND TRAFFIC SHIFTED ONTO THE EXISTING PAVEMENT WIDENING AND COMPLETED EAST PORTION OF THE BRIDGES DURING STAGE 2 TO ALLOW FOR CONSTRUCTION OF THE WEST PORTION OF THE BRIDGE AND AND HMA OVERLAY FOR PAVEMENT PROFILE TRANSITIONS AND PROPOSED GUARDRAIL.

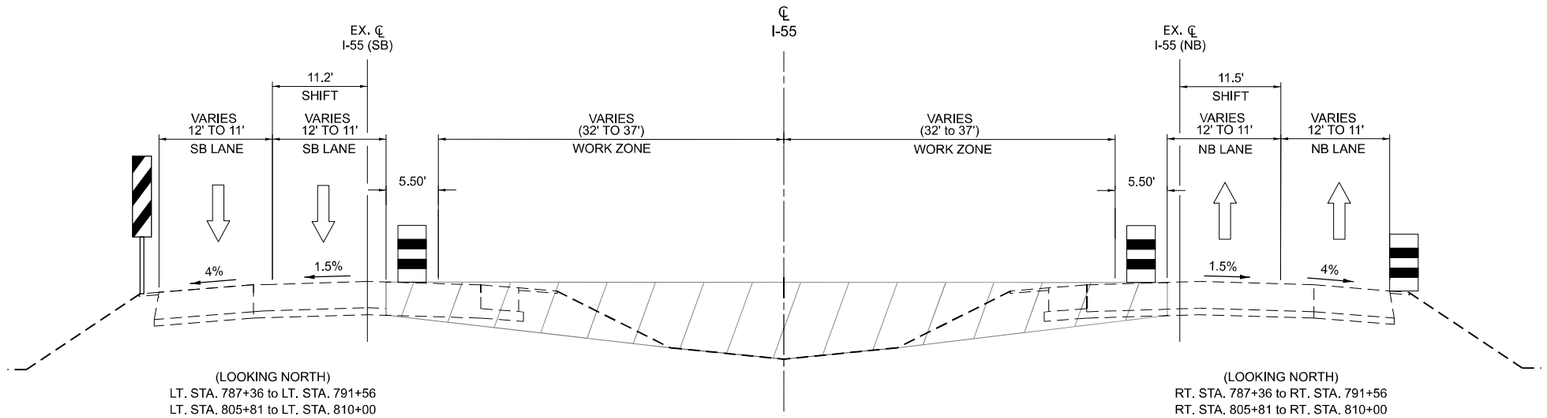

F.A.I. 55 (I-55) STAGING 1 SECTION - NO. 1

BRIDGE OMISSION FROM STA. 792+75 to STA. 804+61 (SEE BRIDGE STAGING)

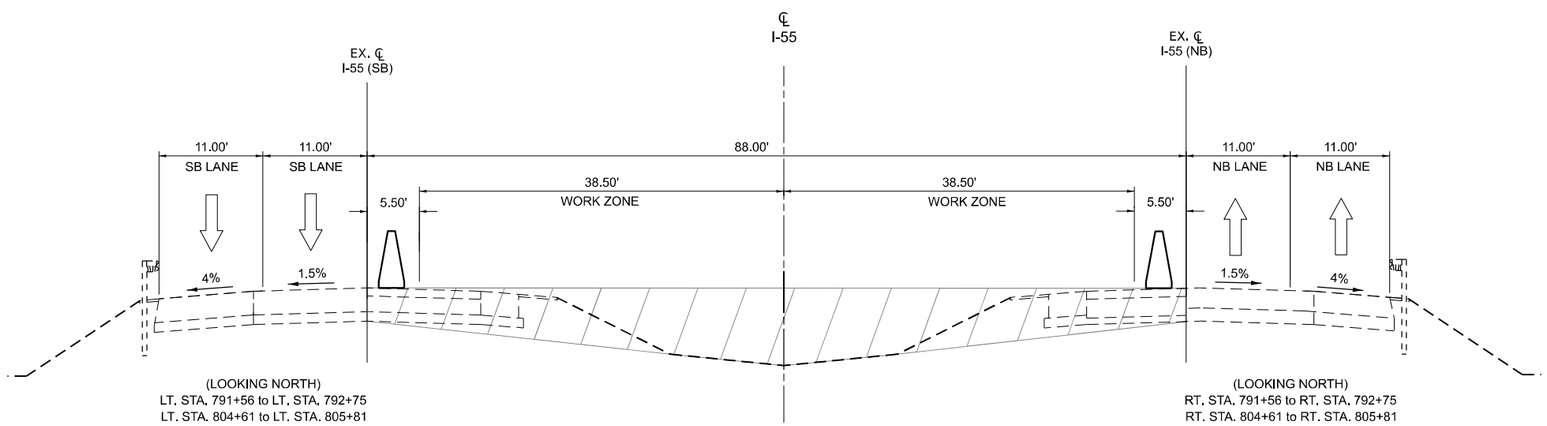

F.A.I. 55 (I-55) STAGING 1 SECTION - NO. 2

NOTE:
IN ALL LOCATIONS WHERE TRAFFIC CONTROL IS REQUIRED, IF A PAVED SURFACE IS NOT AVAILABLE, VERTICAL PANELS AT 25' CENTERS SHOULD BE USED IN LIEU OF DRUMS.

MODEL: MOT STAGE TYP-1 [Sheet]
FILE NAME: pw://cmtengi-pw.bentley.com:cmt-connect-projects/Documents/IDOT/21004103-00/410300/Sheets/72K98/D672K98-sht-MOT-TypicalSection-staging1.dgn

USER NAME = rheady	DESIGNED -	REVISED -	
	DRAWN -	REVISED -	
PLOT SCALE = 0.16666667 ' / in.	CHECKED -	REVISED -	
PLOT DATE = 3/25/2024	DATE -	REVISED -	

STATE OF ILLINOIS
DEPARTMENT OF TRANSPORTATION

MAINTENANCE OF TRAFFIC - STAGE I
TYPICAL SECTION

SCALE: | SHEET 1 OF 1 SHEETS | STA. ___+__.__ TO STA. ___+__.__

F.A.I. RTE.	SECTION	COUNTY	TOTAL SHEETS	SHEET NO.
I-55	(84-2BR-1)D,BY,BP,BRR	SANGAMON	139	28
		CONTRACT NO. 72K98		
		ILLINOIS	FED. AID PROJECT	

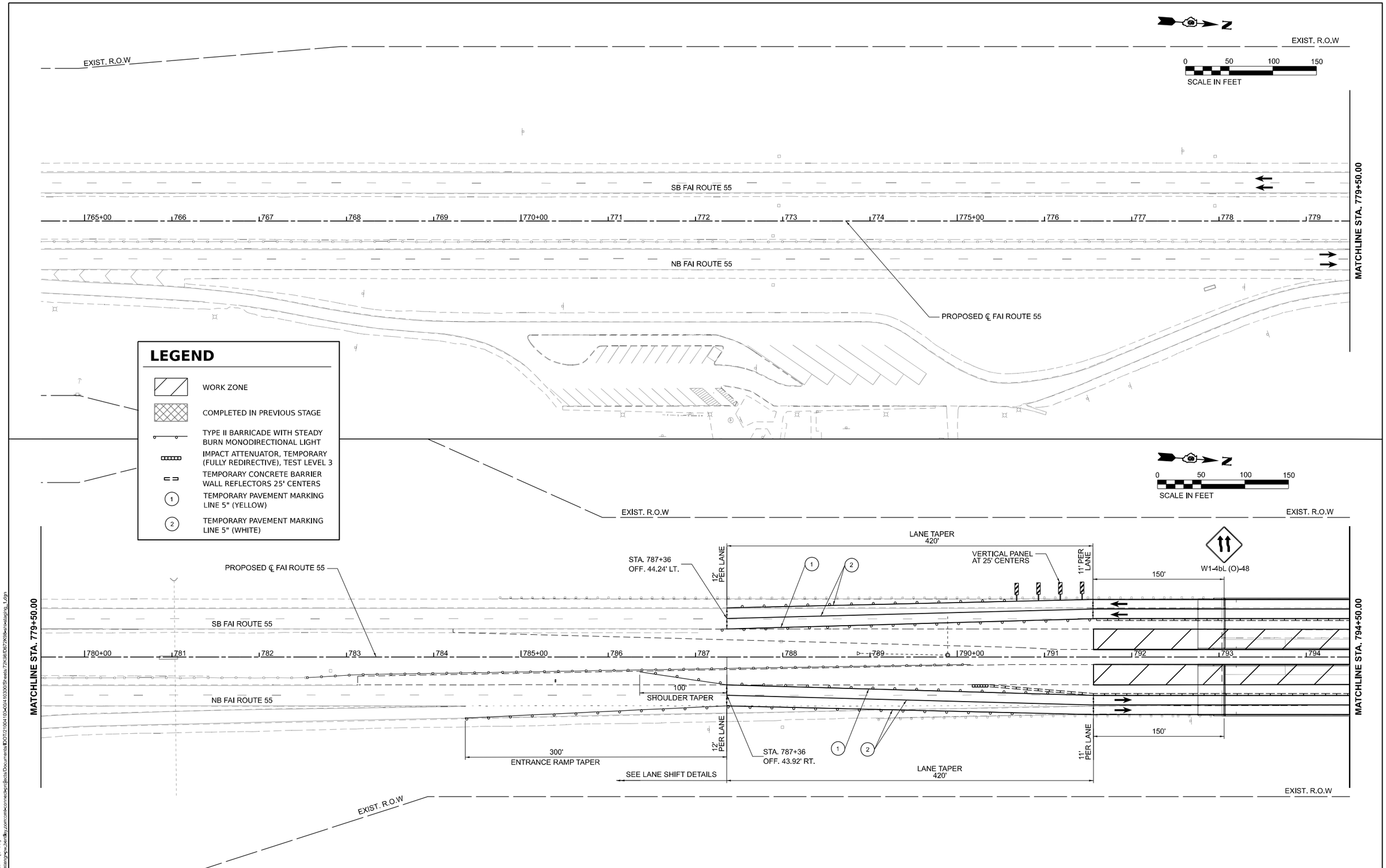

MODEL: PR_I55-Plan 1 [Sheet]
FILE NAME: pw://contengpw-pw.bentley.com:pw-connect-projects/Documents/DOT/21004105-0041010/0/Sheets/72K98/D972K98-sht-staging_1.dgn

USER NAME = rheady	DESIGNED -	REVISED -	
	DRAWN -	REVISED -	
PLOT SCALE = 0.16660000 ' / in.	CHECKED -	REVISED -	
PLOT DATE = 3/28/2024	DATE -	REVISED -	

STATE OF ILLINOIS
DEPARTMENT OF TRANSPORTATION

FAI ROUTE 55 - INTERSTATE 55
MAINTENANCE OF TRAFFIC - STAGE I

SCALE: 1"=50' | SHEET 1 OF 2 SHEETS | STA. 764+50 TO STA. 794+50

F.A. I RTE.	SECTION	COUNTY	TOTAL SHEETS	SHEET NO.
I-55	(84-2BR-1)D,BY,BP,BRR	SANGAMON	139	29
		CONTRACT NO. 72K98		
		ILLINOIS	FED. AID PROJECT	

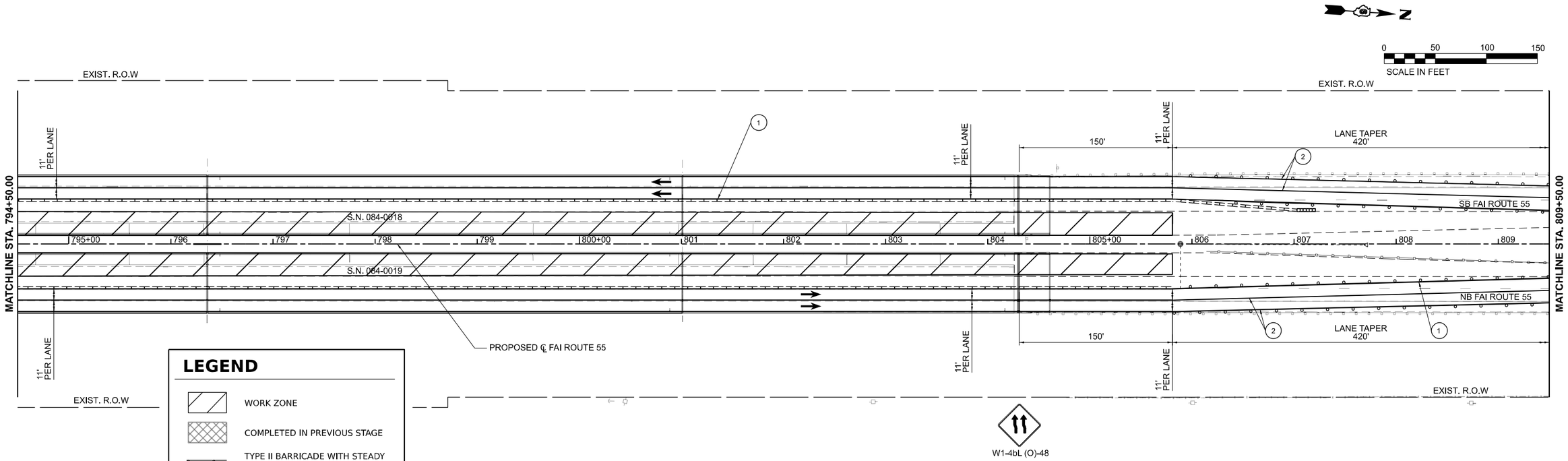

LEGEND

- WORK ZONE
- COMPLETED IN PREVIOUS STAGE
- TYPE II BARRICADE WITH STEADY BURN MONODIRECTIONAL LIGHT
- IMPACT ATTENUATOR, TEMPORARY (FULLY REDIRECTIVE), TEST LEVEL 3
- TEMPORARY CONCRETE BARRIER WALL REFLECTORS 25' CENTERS
- (1) TEMPORARY PAVEMENT MARKING LINE 5" (YELLOW)
- (2) TEMPORARY PAVEMENT MARKING LINE 5" (WHITE)

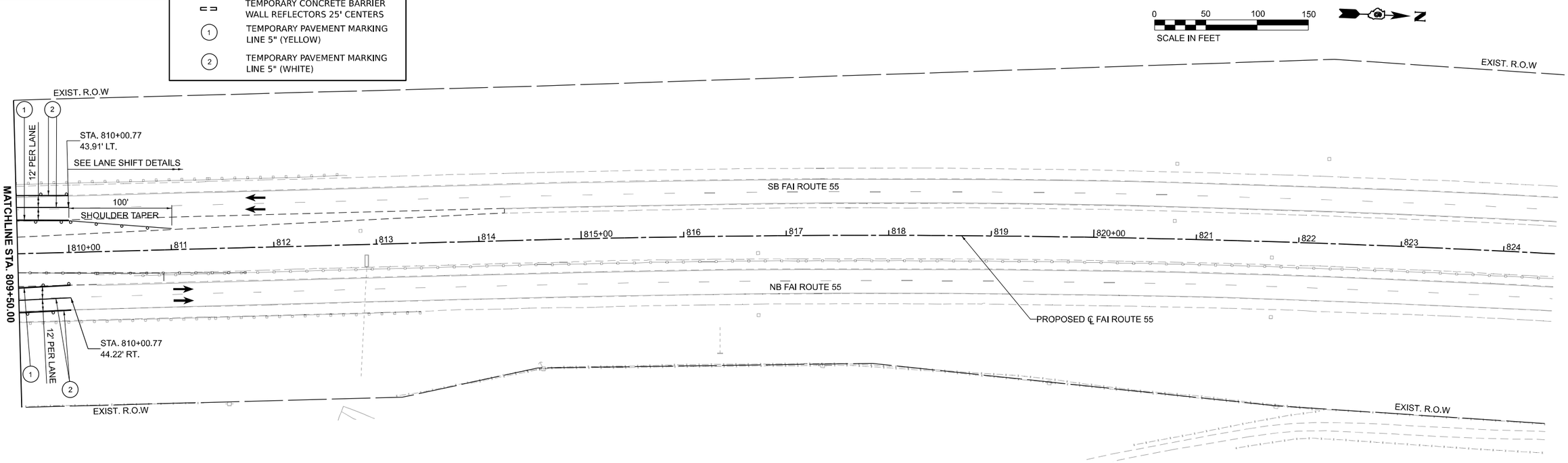

USER NAME = rheady	DESIGNED -	REVISED -	
	DRAWN -	REVISED -	
PLOT SCALE = 0.16660000 ' / in.	CHECKED -	REVISED -	
PLOT DATE = 3/28/2024	DATE -	REVISED -	

STATE OF ILLINOIS
DEPARTMENT OF TRANSPORTATION

FAI ROUTE 55 - INTERSTATE 55
MAINTENANCE OF TRAFFIC - STAGE I

SCALE: 1"=50' | SHEET 2 OF 2 SHEETS | STA. 794+50 TO STA. 824+50

F.A. I RTE.	SECTION	COUNTY	TOTAL SHEETS	SHEET NO.
I-55	(84-2BR-1)D,BY,BP,BRR	SANGAMON	139	30
		CONTRACT NO. 72K98		
		ILLINOIS	FED. AID PROJECT	

MODEL: PR_I55 - Plan 3 [Sheet]
FILE NAME: pw:\\mwaingpw.bentley.com:mwaingpw\Bentley_projects\Documents\IDOT\21004\104004\10300\Sheets\72K98\D672K98ml-staging_1.dgn

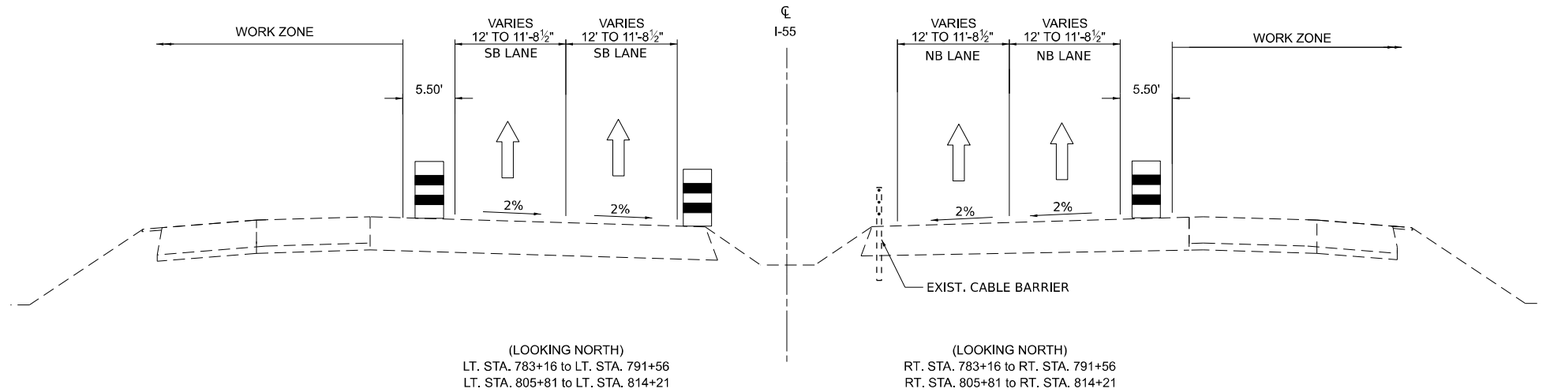

F.A.I. 55 (I-55) STAGING 2 SECTION - NO. 1

BRIDGE OMISSION FROM STA. 792+75 to STA. 804+61 (SEE BRIDGE STAGING)

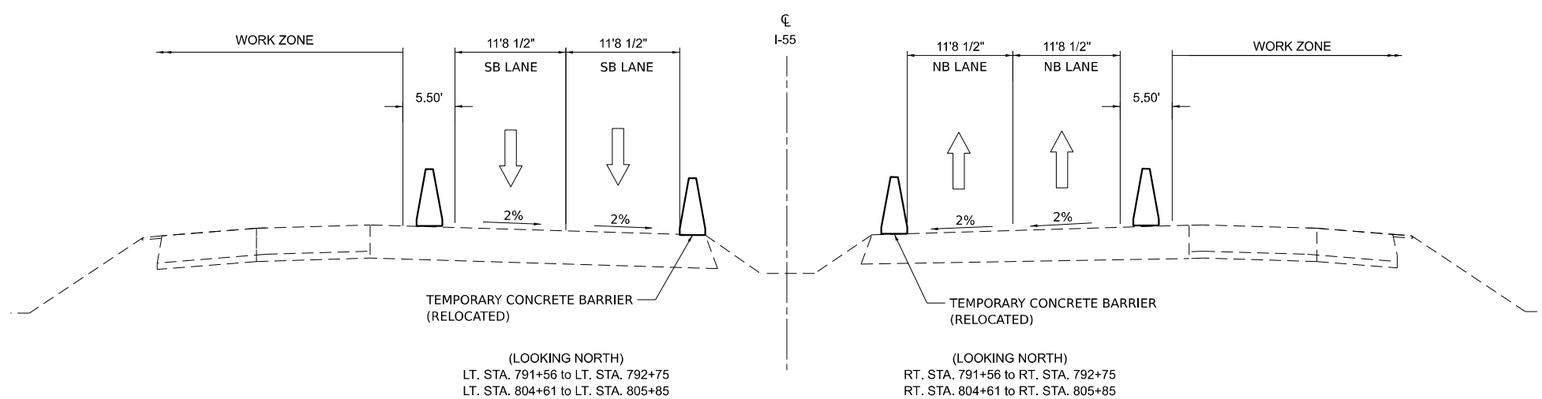

F.A.I. 55 (I-55) STAGING 2 SECTION - NO. 2

NOTES:

1. IN ALL LOCATIONS WHERE TRAFFIC CONTROL IS REQUIRED, IF A PAVED SURFACE IS NOT AVAILABLE, VERTICAL PANELS AT 25' CENTERS SHOULD BE USED IN LIEU OF DRUMS.
2. SEE MOT PLAN SHEETS FOR TEMPORARY CONCRETE BARRIER SPECIFIC LOCATIONS.

MODEL: MOT STAGE TYP-1 [Sheet]
FILE NAME: pw://cmtengp-pw.bentley.com:cmt-connect-projects/Documents/IDOT/21094103-00/410300/Sheets/72K98/D672K98-sht-MOT-TypicalSection-staging2.dgn

USER NAME = rheady	DESIGNED -	REVISED -	
	DRAWN -	REVISED -	
PLOT SCALE = 0.16666667 ' / in.	CHECKED -	REVISED -	
PLOT DATE = 3/25/2024	DATE -	REVISED -	

STATE OF ILLINOIS
DEPARTMENT OF TRANSPORTATION

MAINTENANCE OF TRAFFIC - STAGE 2
TYPICAL SECTION

SCALE: | SHEET 1 OF 1 SHEETS | STA. ___+__.__ TO STA. ___+__.__

F.A.I. RTE.	SECTION	COUNTY	TOTAL SHEETS	SHEET NO.
I-55	(84-2BR-1)D,BY,BP,BRR	SANGAMON	139	31
		CONTRACT NO. 72K98		
		ILLINOIS	FED. AID PROJECT	

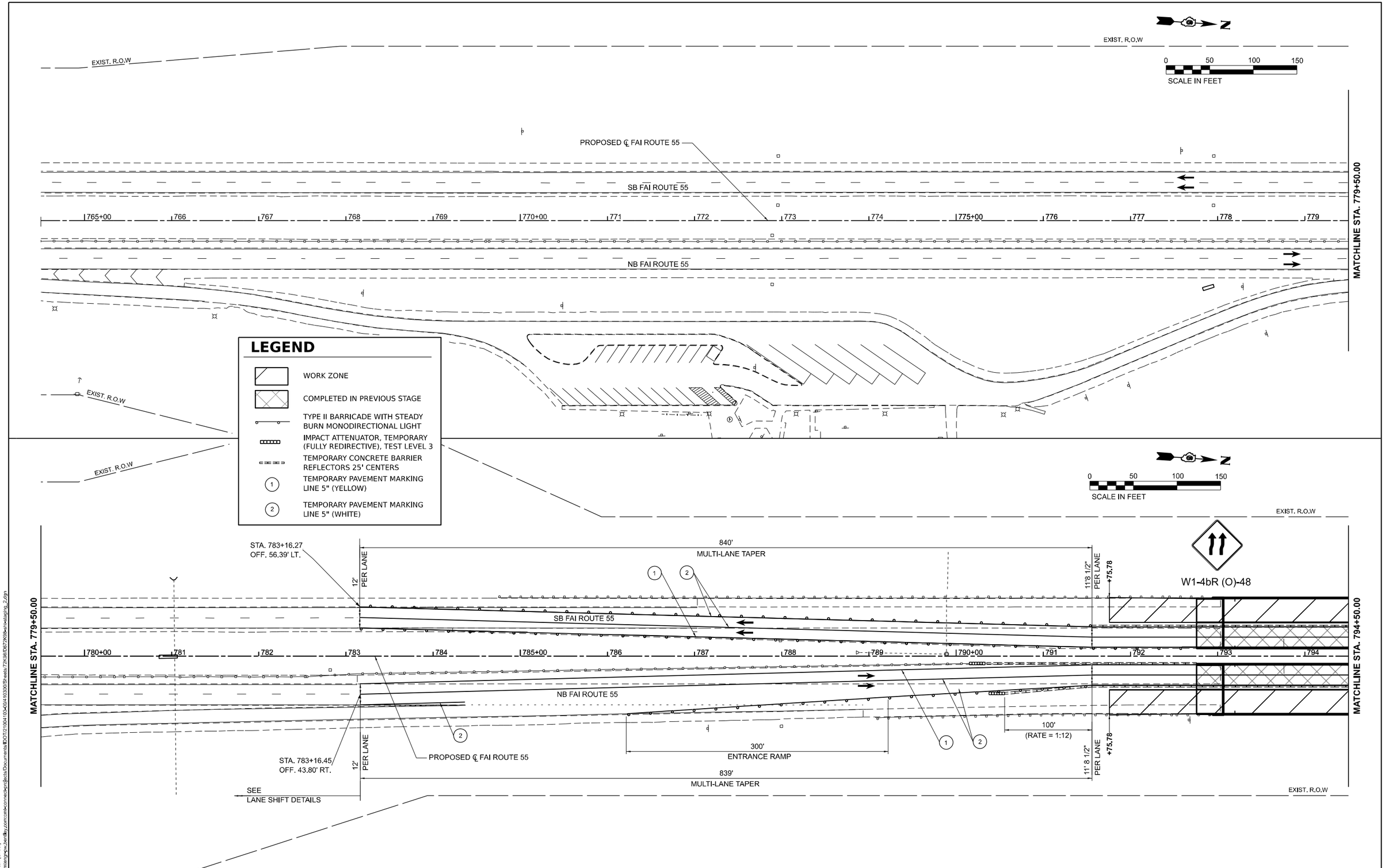

MODEL: PR_I55 - Plan [Sheet]
FILE NAME: pw://cmtengrpw.bentley.com:cmtenc-connect-projects/Documents/DOT/21004/10400410300/Sheets/72K98/D072K98-sht-staging_2.dgn

CMT
License No. 184-000613
Copyright CMT, Inc.

USER NAME = rheady	DESIGNED - VJR	REVISED -	
	DRAWN - VJR	REVISED -	
PLOT SCALE = 0.16666667 ' / in.	CHECKED - KLT	REVISED -	
PLOT DATE = 3/28/2024	DATE - MARCH 2024	REVISED -	

STATE OF ILLINOIS
DEPARTMENT OF TRANSPORTATION

FAI ROUTE 55 - INTERSTATE 55
MAINTENANCE OF TRAFFIC - STAGE 2

SCALE: 1" = 50' | SHEET 1 OF 2 SHEETS | STA. 764+50 TO STA. 794+50

F.A.I. RTE.	SECTION	COUNTY	TOTAL SHEETS	SHEET NO.
55	(84-2BR-1) D, BY, BP, BRR	SANGAMON	139	32
		CONTRACT NO. 72K98		
		ILLINOIS	FED. AID PROJECT	

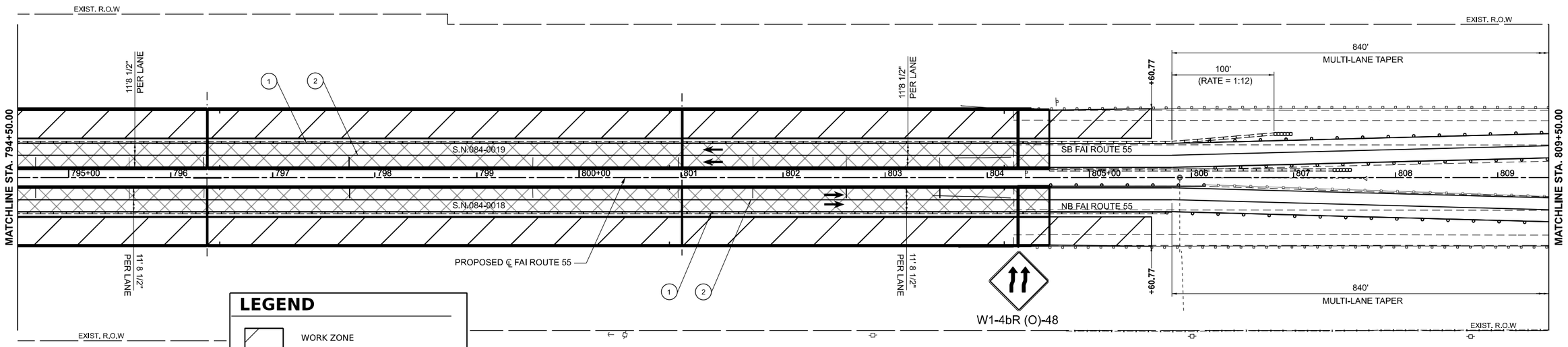

LEGEND

- WORK ZONE
- COMPLETED IN PREVIOUS STAGE
- TYPE II BARRICADE WITH STEADY BURN MONODIRECTIONAL LIGHT
- IMPACT ATTENUATOR, TEMPORARY (FULLY REDIRECTIVE), TEST LEVEL 3
- TEMPORARY CONCRETE BARRIER WALL WITH REFLECTORS 25' CENTERS
- (1) TEMPORARY PAVEMENT MARKING LINE 5" (YELLOW)
- (2) TEMPORARY PAVEMENT MARKING LINE 5" (WHITE)

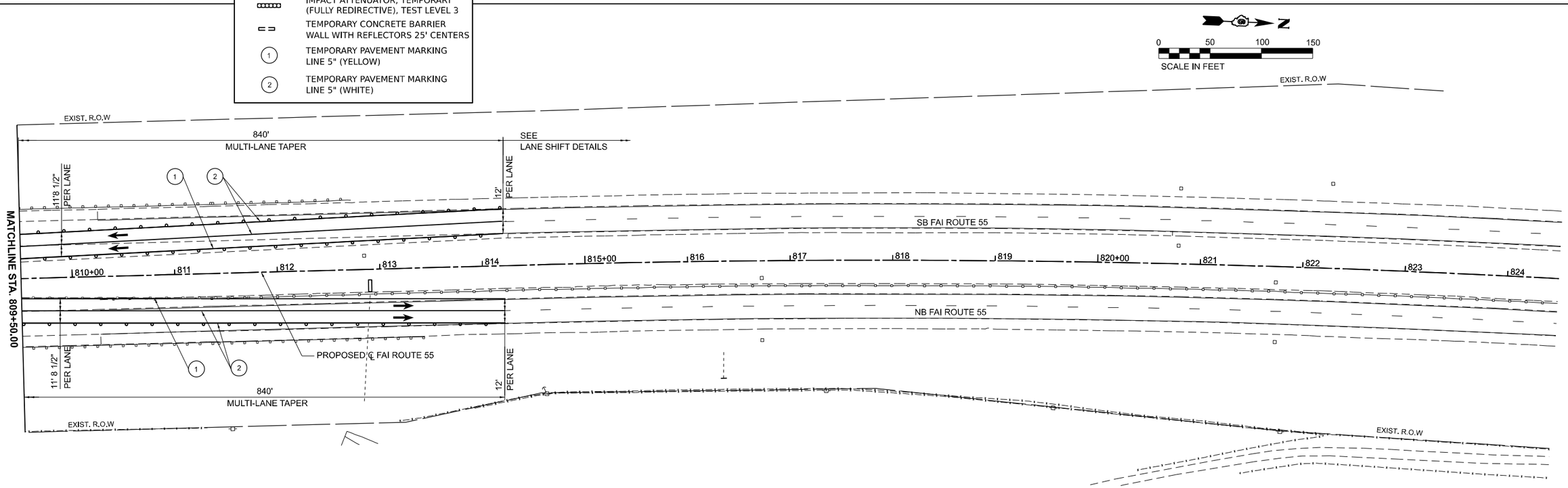

CMT License No. 184-000613 Copyright CMT, Inc.	USER NAME = rheady	DESIGNED - VJR	REVISED -	STATE OF ILLINOIS DEPARTMENT OF TRANSPORTATION	FAI ROUTE 55 - INTERSTATE 55 MAINTENANCE OF TRAFFIC - STAGE 2
		DRAWN - VJR	REVISED -		
	PLOT SCALE = 0.16666667 ' / in.	CHECKED - KLT	REVISED -		
	PLOT DATE = 3/28/2024	DATE - MARCH 2024	REVISED -		SCALE: 1" = 50' SHEET 2 OF 2 SHEETS STA. 794+50 TO STA. 824+50

F.A.I. RTE.	SECTION	COUNTY	TOTAL SHEETS	SHEET NO.
55	(84-2BR-1) D, BY, BP, BRR	SANGAMON	139	33
		CONTRACT NO. 72K98		
		ILLINOIS	FED. AID PROJECT	

MODEL: PR_I55 - Plan-2 [Sheet]
FILE NAME: pw://cmtengr-pw.bentley.com:cmtr-connect-projects/Documents/IDOT/21004105-40041030/Sheets/72K98/0972K98-sht-staging_2.dgn

GENERAL NOTES

1. MILEAGES FOR WW AND PCMS ARE APPROXIMATE AND CAN BE FIELD ADJUSTED AS NECESSARY BY THE ENGINEER TO MATCH THE FIELD AND TRAFFIC CONDITIONS.
2. PCMS SHALL BE PAID FOR SEPARATLY PER CAL DAY AND NOT A PART OF THE REAL TIME TRAFFIC CONTROL SYSTEM.
3. "BE PREPARED TO STOP SIGNS" SHALL BE PLACED AT THE DISCRETION OF THE ENGINEER AS DESCRIBED IN THE SPECIAL PROVISIONS.
4. PCMS AT BEGINNING OF LANE TAPER SHALL BE STAGGERED BY 1,000 FEET.

LEGEND

(R) - ROAD CONSTRUCTION AHEAD

WW - WIG-WAG TRAFFIC WARNING

PCMS - PORTABLE CHANGEABLE MESSAGE SIGN

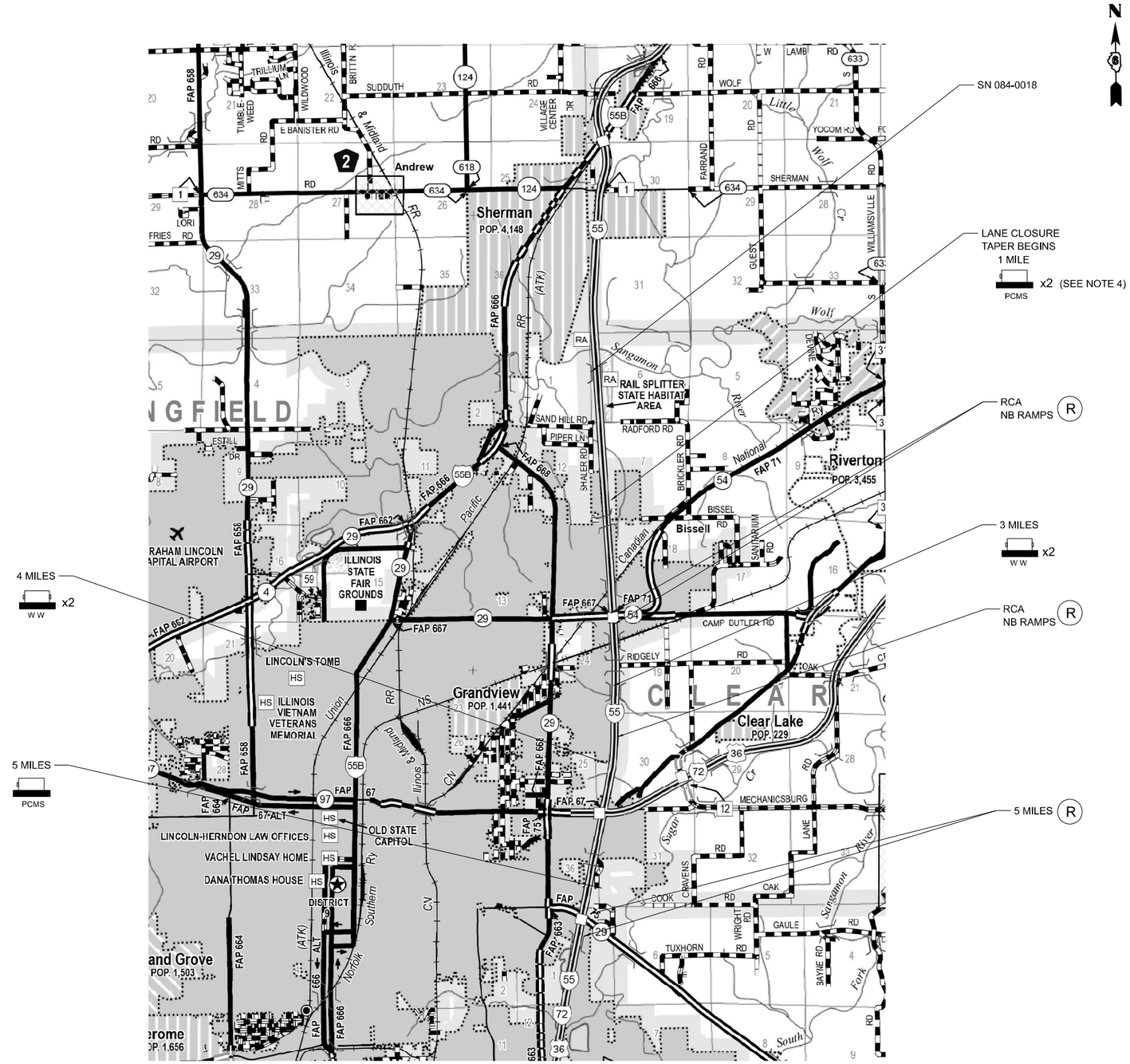

USER NAME = rheady	DESIGNED -	REVISED -	
	DRAWN -	REVISED -	
PLOT SCALE = 0.16666667 ' / In.	CHECKED -	REVISED -	
PLOT DATE = 3/25/2024	DATE -	REVISED -	

STATE OF ILLINOIS
DEPARTMENT OF TRANSPORTATION

REAL TIME TRAFFIC CONTROL
(NORTHBOUND)

SCALE: 1"=50' | SHEET 1 OF 1 SHEETS | STA. TO STA.

F.A. I RTE.	SECTION	COUNTY	TOTAL SHEETS	SHEET NO.
55	(84-2BR-1)D,BY,BP,BRR	SANGAMON	139	34
		CONTRACT NO. 72K98		
	ILLINOIS	FED. AID PROJECT		

MODEL: PR_D5 - Plan 1 [Sheet]
FILE NAME: pw://oneway-pw.bentley.com:ow-connect-projects/Documents/D0172100410-40410300/Sheets/72K98/D0172K98-sht-RealTimeTrafficControlNorthboundLn.dgn

GENERAL NOTES

1. MILEAGES FOR WW AND PCMS ARE APPROXIMATE AND CAN BE FIELD ADJUSTED AS NECESSARY BY THE ENGINEER TO MATCH THE FIELD AND TRAFFIC CONDITIONS.
2. PCMS SHALL BE PAID FOR SEPARATLY PER CAL DAY AND NOT A PART OF THE REAL TIME TRAFFIC CONTROL SYSTEM.
3. "BE PREPARED TO STOP SIGNS" SHALL BE PLACED AT THE DISCRETION OF THE ENGINEER AS DESCRIBED IN THE SPECIAL PROVISIONS.
4. PCMS AT BEGINNING OF LANE TAPER SHALL BE STAGGERED BY 1,000 FEET.

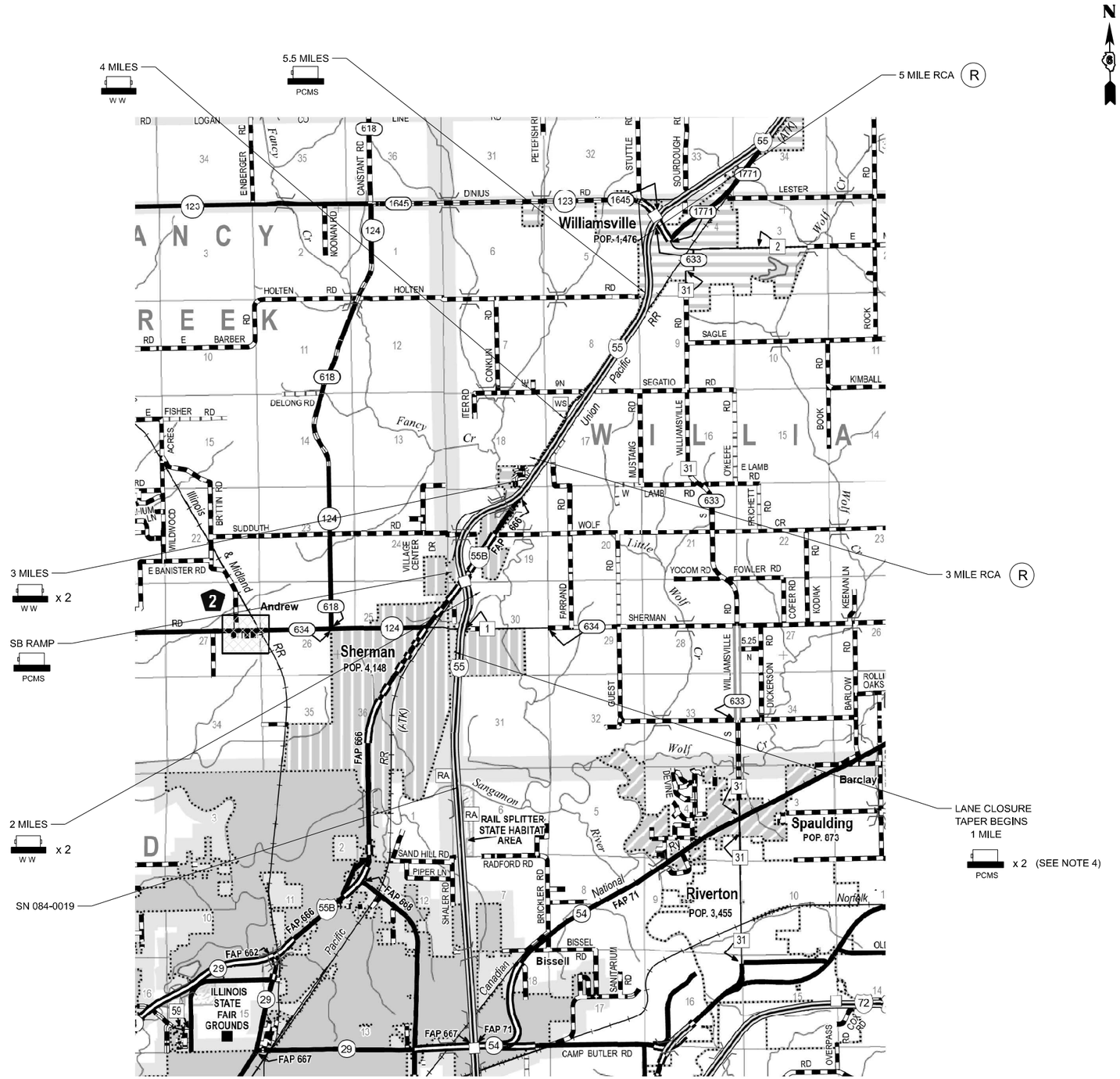

LEGEND

(R) - ROAD CONSTRUCTION AHEAD

W W - WIG-WAG TRAFFIC WARNING

PCMS - PORTABLE CHANGEABLE MESSAGE SIGN

MODEL: PR_I55 - Plan 1 [Sheet]
FILE NAME: pw://cmtang-pw.bentley.com:cmtang-projects/Documents/IDOT/10410-40410300/Sheets/72K98/D672K98-sht-Roadway-traffic-Control/Southbound.dgn

USER NAME = rheady	DESIGNED -	REVISED -	
	DRAWN -	REVISED -	
PLOT SCALE = 0.16666667 ' / in.	CHECKED -	REVISED -	
PLOT DATE = 3/25/2024	DATE -	REVISED -	

STATE OF ILLINOIS
DEPARTMENT OF TRANSPORTATION

REAL TIME TRAFFIC CONTROL
(SOUTHBOUND)

SCALE: 1"=50' | SHEET 1 OF 1 SHEETS | STA. | TO STA.

F.A. I RTE.	SECTION	COUNTY	TOTAL SHEETS	SHEET NO.
55	(84-2BR-1)D,BY,BP,BRR	SANGAMON	139	35

CONTRACT NO. 72K98

ILLINOIS | FED. AID PROJECT

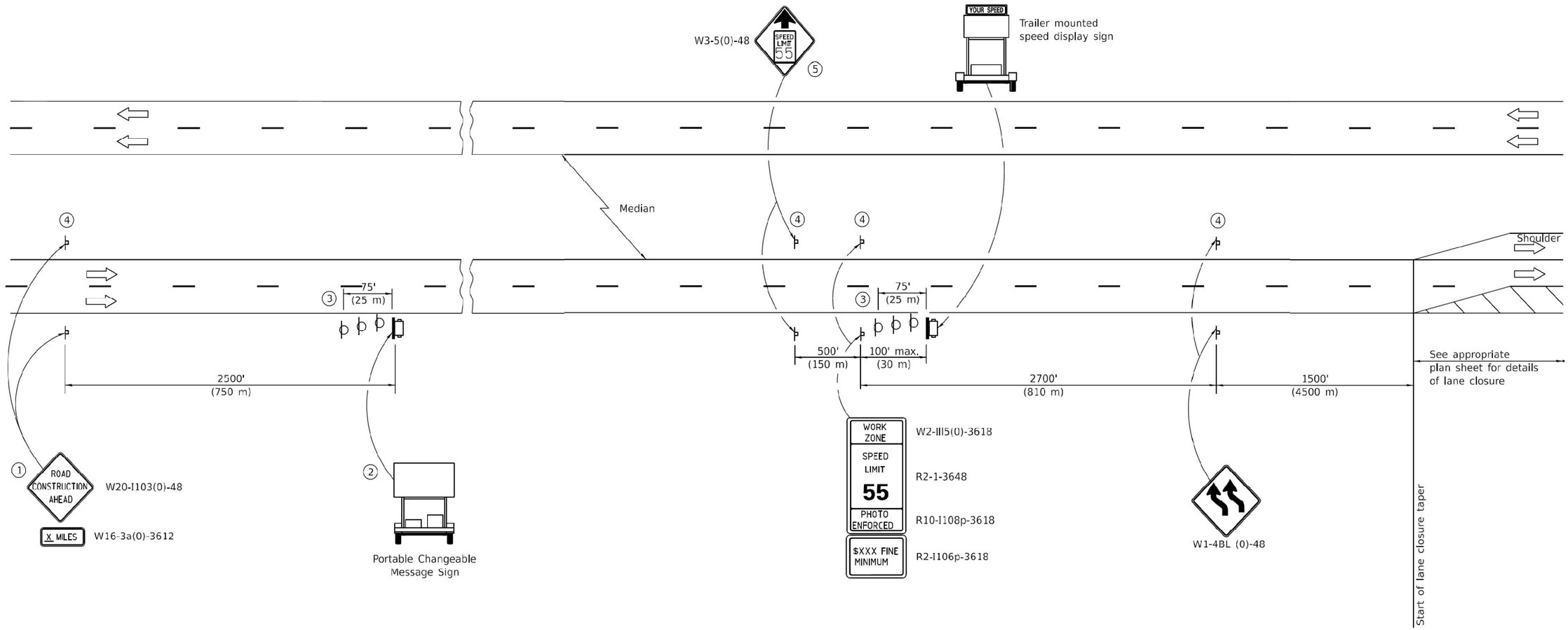

SYMBOLS

- Arrow board
- Trailer mounted sign
- Sign
- Type II barricade, drum, or vertical barricade with monodirectional ashing light

1. The Road Construction Ahead sign shall be located 3 to 5 miles in advance of the project limits. These signs will be omitted preceding the second lane shift.
2. The message board shall be used to display status of lanes within the project. The primary messages shall be:

   "Lane Shift" / " X Miles Ahead"
3. Three, Type II barricades, drums, or vertical barricades at 25' (8 m) centers.
4. This sign shall be omitted when median width is less than 10' (3 m).
5. This sign shall only be used if the existing speed limit is greater than 65 mph.

GENERAL NOTES

This detail is used for preceding signs to reverse curve lane shift on a freeway/expressway.

The rst sign and the message board are stationary.

The last four signs and arrow board shall be moved as necessary to maintain the required distance from the start of the lane shift.

All dimensions are in inches (millimeters) unless otherwise shown.

MODEL: PR_I56 - Plan 1 [Sheet]
FILE NAME: pw://cmaing-pw.bentley.com:cmaing-connect-projects/Documents/IDOT/21004 10-04/41030/Sheets/72K98/D672K98-sht-Traffic Control WigWag.dgn

USER NAME = rheady	DESIGNED -	REVISED -	
	DRAWN -	REVISED -	
PLOT SCALE = 0.16666667 ' / in.	CHECKED -	REVISED -	
PLOT DATE = 3/25/2024	DATE -	REVISED -	

STATE OF ILLINOIS
DEPARTMENT OF TRANSPORTATION

FAI ROUTE 55 - INTERSTATE 55
LANE SHIFT SIGN DETAIL

SCALE: N.T.S | SHEET 1 OF 1 SHEETS | STA. TO STA.

F.A.I RTE.	SECTION	COUNTY	TOTAL SHEETS	SHEET NO.
55	(84-2BR-1)D,BY,BP,BRR	SANGAMON	139	36
		CONTRACT NO. 72K98		
		ILLINOIS FED. AID PROJECT		

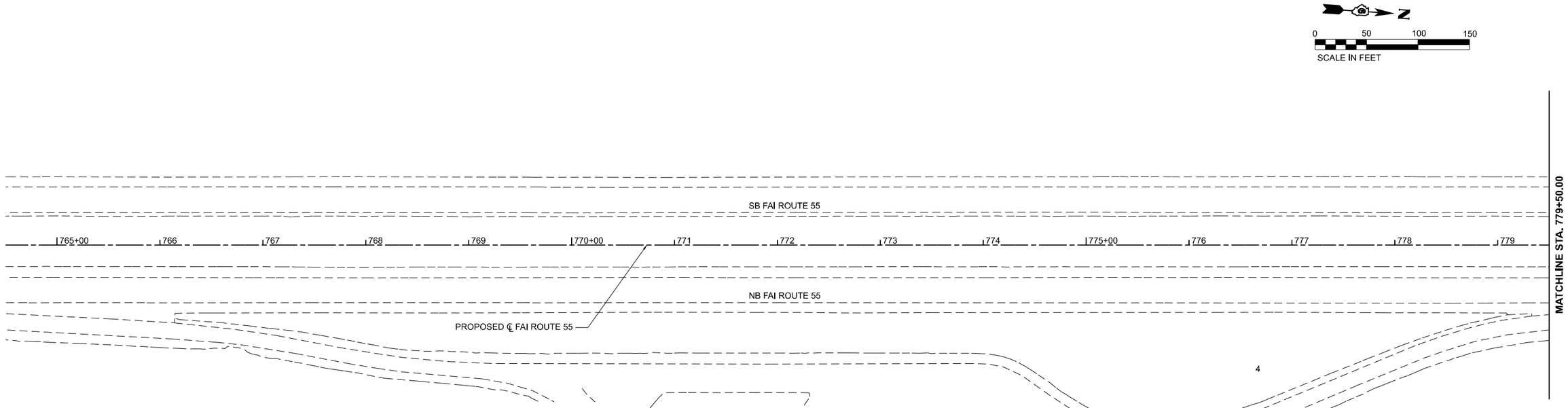

LEGEND

1. GROOVING FOR RECESSED PAVEMENT MARKING 6" MODIFIED URETHANE PAVEMENT MARKING - LINE 5" (WHITE)
2. DUAL RAISED REFLECTIVE PAVEMENT MARKERS (ONE WAY CRYSTAL) AT 80' CENTERS (TYP.)
3. GROOVING FOR RECESSED PAVEMENT MARKING 6" MODIFIED URETHANE MARKING - LINE 5" (WHITE - 10' DASH, 30' SKIP)
4. GROOVING FOR RECESSED PAVEMENT MARKING 6" MODIFIED URETHANE MARKING - LINE 5"(YELLOW)
5. MODIFIED URETHANE PAVEMENT MARKING - LINE 5" (WHITE)
6. MODIFIED URETHANE PAVEMENT MARKING - LINE 5" (WHITE - 10' DASH, 30' SKIP)
7. MODIFIED URETHANE PAVEMENT MARKING LINE 2"*6"*6" SKIP DASH (WHITE)
8. MODIFIED URETHANE PAVEMENT MARKING - LINE 5" (YELLOW)
9. MODIFIED URETHANE PAVEMENT MARKING - LINE 12" (YELLOW) DIAGONALS AT 40' CENTERS (TYP.)
10. MODIFIED URETHANE PAVEMENT MARKING - LINE 8" (YELLOW)

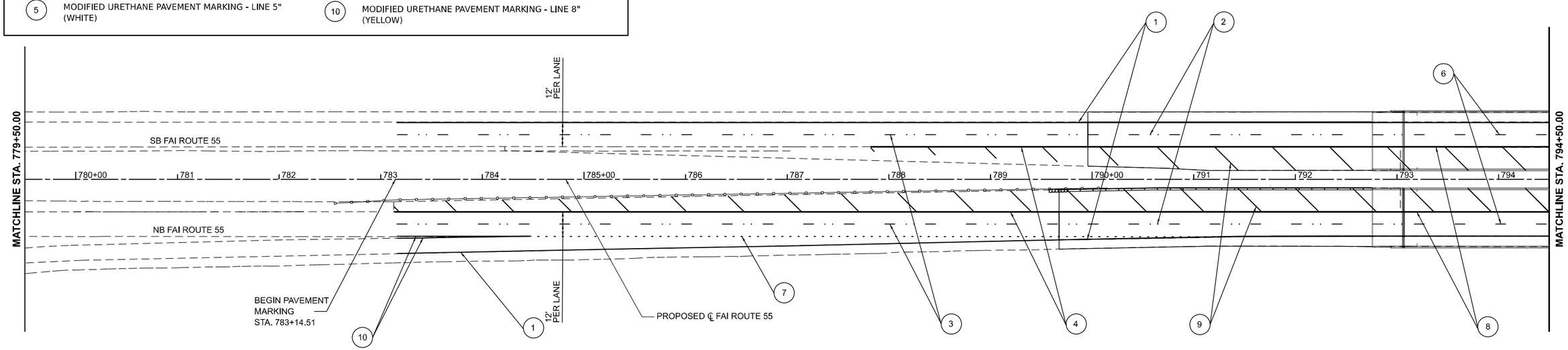

NOTE:

1. NO GROOVING ON WIDENING AREA FOR FUTURE 3RD LANE OR ON BRIDGE DECK FOR PAVEMENT MARKING.

MODEL: PR_I55 - Plan 1 [$Sheet]
FILE NAME: pw://contengpw.bentley.com:contengpw-dgn/Documents/IDOT/21004105-004103/00/Sheets/72K98/D072K98sel-sxmk.dgn

CMT
License No. 184-000613

USER NAME = rheady	DESIGNED - VJR	REVISED -	
	DRAWN - RAH	REVISED -	
PLOT SCALE = 0.16660000 ' / in.	CHECKED - KLT	REVISED -	
PLOT DATE = 3/25/2024	DATE - MARCH 2024	REVISED -	

STATE OF ILLINOIS
DEPARTMENT OF TRANSPORTATION

FAI ROUTE 55 - INTERSTATE 55
PAVEMENT MARKING PLANS

SCALE: | SHEET OF SHEETS | STA. TO STA.

F.A.I. RTE.	SECTION	COUNTY	TOTAL SHEETS	SHEET NO.
55	(84-2BR-1) D, BY, BP, BRR	SANGAMON	139	37
		CONTRACT NO. 72K98		
		ILLINOIS	FED. AID PROJECT	

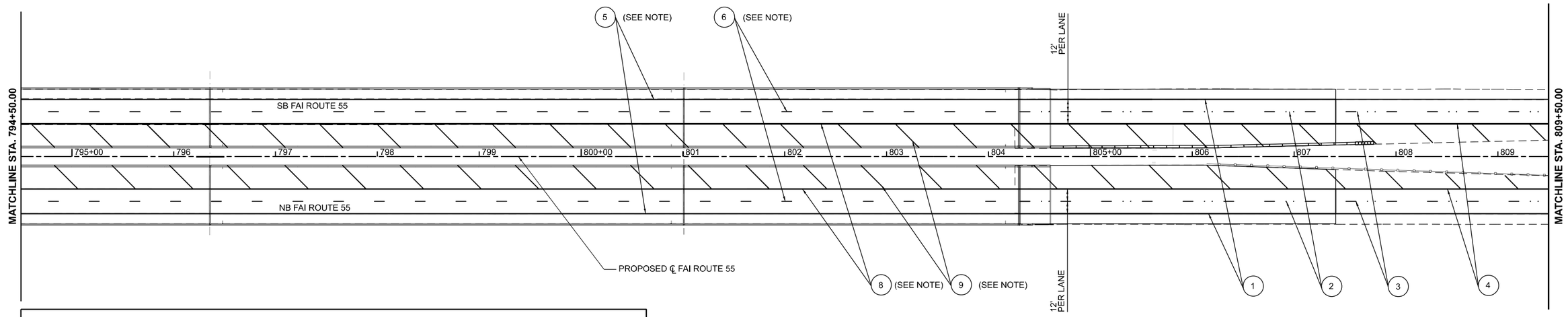

LEGEND

1	GROOVING FOR RECESSED PAVEMENT MARKING 6" MODIFIED URETHANE PAVEMENT MARKING - LINE 5" (WHITE)	6	MODIFIED URETHANE PAVEMENT MARKING - LINE 5" (WHITE - 10' DASH, 30' SKIP)
2	DUAL RAISED REFLECTIVE PAVEMENT MARKERS (ONE WAY CRYSTAL) AT 80' CENTERS (TYP.)	7	MODIFIED URETHANE PAVEMENT MARKING LINE 2"*6"*6" SKIP DASH (WHITE)
3	GROOVING FOR RECESSED PAVEMENT MARKING 6" MODIFIED URETHANE MARKING - LINE 5" (WHITE - 10' DASH, 30' SKIP)	8	MODIFIED URETHANE PAVEMENT MARKING - LINE 5" (YELLOW)
4	GROOVING FOR RECESSED PAVEMENT MARKING 6" MODIFIED URETHANE MARKING - LINE 5"(YELLOW)	9	MODIFIED URETHANE PAVEMENT MARKING - LINE 12" (YELLOW) DIAGONALS AT 40' CENTERS (TYP.)
5	MODIFIED URETHANE PAVEMENT MARKING - LINE 5" (WHITE)	10	MODIFIED URETHANE PAVEMENT MARKING - LINE 8" (YELLOW)

NOTE:

1. NO GROOVING ON WIDENING AREA FOR FUTURE 3RD LANE OR ON BRIDGE DECK FOR PAVEMENT MARKING.

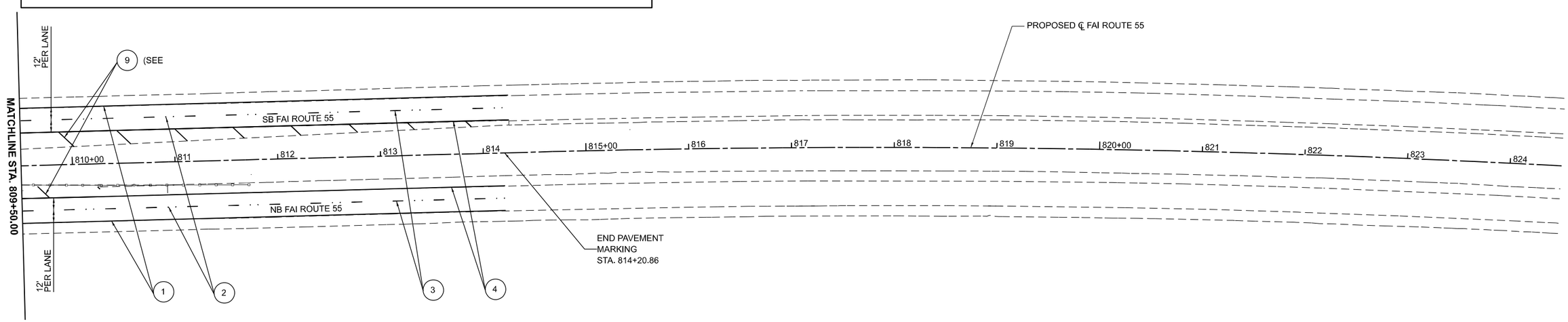

NOTE:

1. NO GROOVING ON WIDENING AREA FOR FUTURE 3RD LANE OR ON BRIDGE DECK FOR PAVEMENT MARKING.

MODEL: PR_I55 - Plan 3 [Sheet]
FILE NAME: pw://mwang-pw.bentley.com:mwang-connect-projects/Documents/EDOT/210041/04/04103/Sheets/72K98D672K98sh1mrk.dgn

CMT
License No. 184-000613 © Copyright CMT, Inc.

USER NAME = rheady	DESIGNED - VJR	REVISED -	
	DRAWN - RAH	REVISED -	
PLOT SCALE = 0.16666667 ' / in.	CHECKED - KLT	REVISED -	
PLOT DATE = 3/25/2024	DATE - MARCH 2024	REVISED -	

STATE OF ILLINOIS
DEPARTMENT OF TRANSPORTATION

FAI ROUTE 55 - INTERSTATE 55
PAVEMENT MARKING PLANS

SCALE: 1" = 50' | SHEET 2 OF 2 SHEETS | STA. 794+50 TO STA. 824+50

F.A.I. RTE.	SECTION	COUNTY	TOTAL SHEETS	SHEET NO.
55	(84-2BR-1) D, BY, BP, BRR	SANGAMON	139	38
		CONTRACT NO. 72K98		
		ILLINOIS	FED. AID PROJECT	

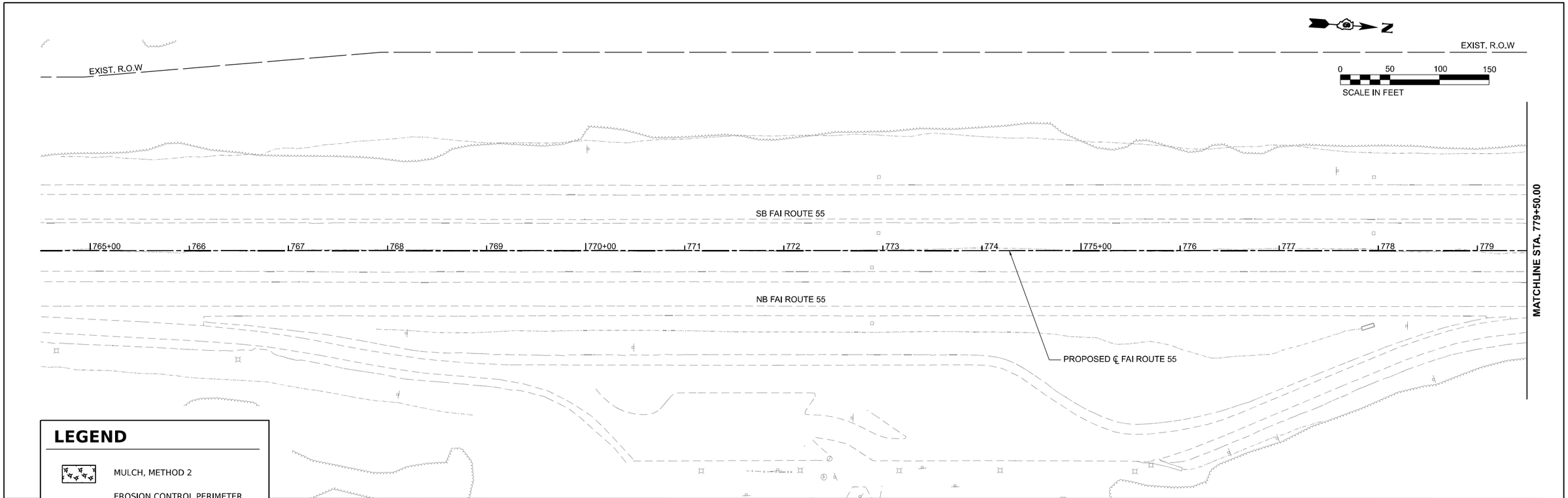

LEGEND

- MULCH, METHOD 2
- EROSION CONTROL PERIMETER BARRIER
- INLET AND PIPE PROTECTION
- LIMITS OF CONSTRUCTION

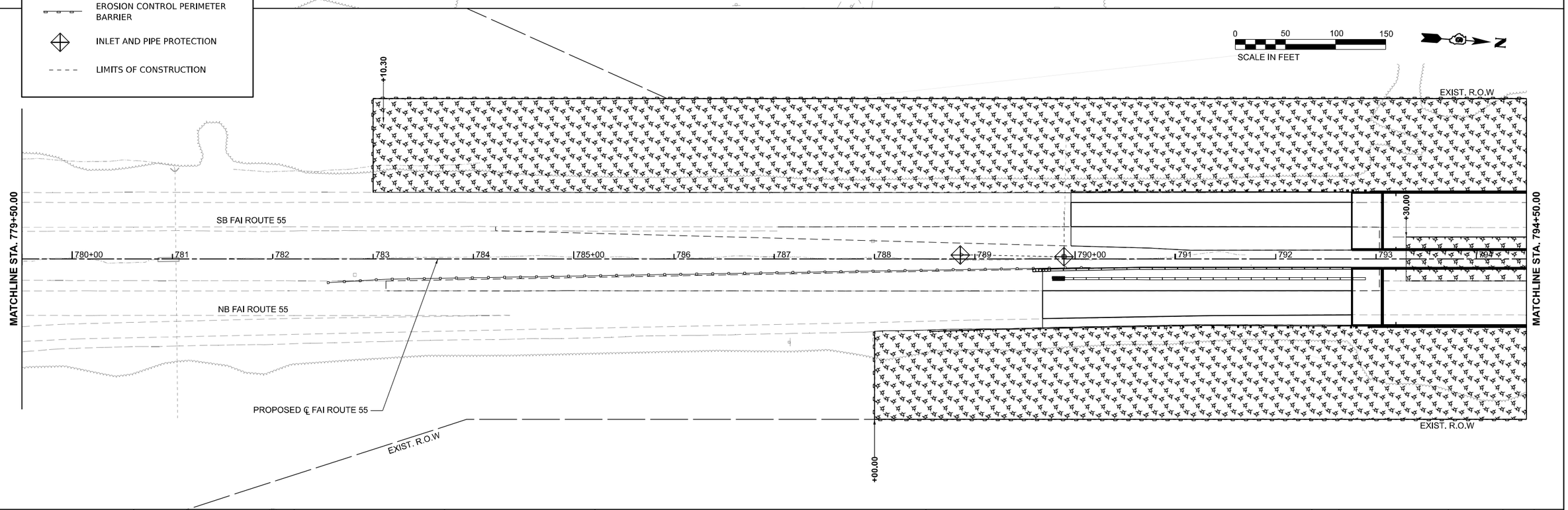

MODEL: PR_I55 - Plan 1 [Sheet]
FILE NAME: pw://cmtengpw.bentley.com:cmtengpw_bentley_com:connect-projects/Documents/IDOT/210041/04/04 10300/Sheets/72K98/D972K98-sht-ErosionControl.dgn

CMT
License No. 184-000613

USER NAME = rheady	DESIGNED - VJR	REVISED -	
	DRAWN - RAH	REVISED -	
PLOT SCALE = 0.16660000 ' / in.	CHECKED - KLT	REVISED -	
PLOT DATE = 3/25/2024	DATE - MARCH 2024	REVISED -	

STATE OF ILLINOIS
DEPARTMENT OF TRANSPORTATION

FAI ROUTE 55 - INTERSTATE 55
EROSION CONTROL PLANS

SCALE: 1" = 50' | SHEET 1 OF 2 SHEETS | STA. 764+50 TO STA. 794+50

F.A.I. RTE.	SECTION	COUNTY	TOTAL SHEETS	SHEET NO.
55	(84-2BR-1) D, BY, BP, BRR	SANGAMON	139	39
		CONTRACT NO. 72K98		
		ILLINOIS	FED. AID PROJECT	

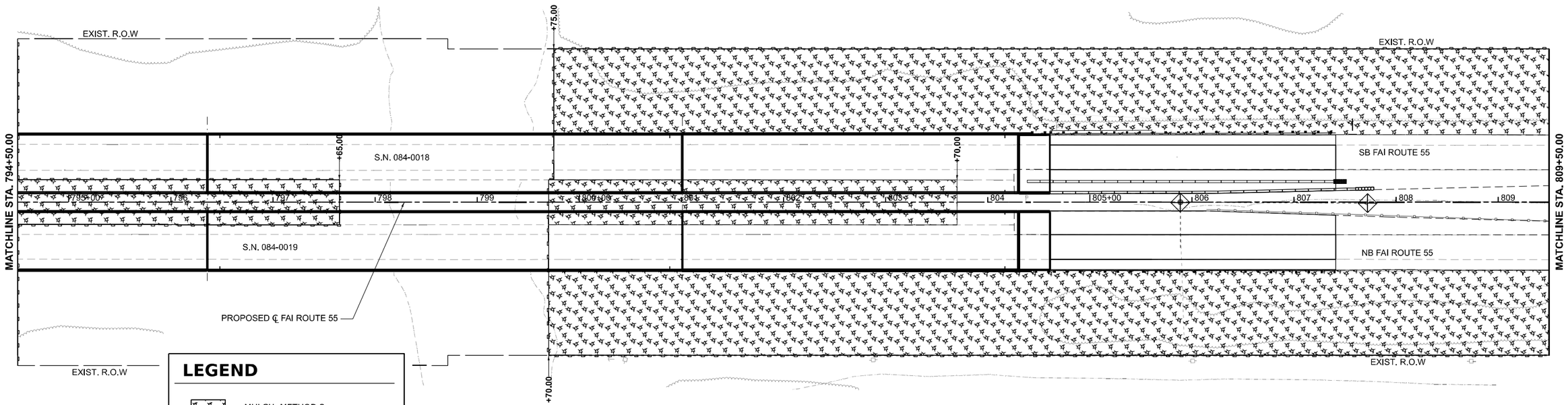

LEGEND

- MULCH, METHOD 2
- EROSION CONTROL PERIMETER BARRIER
- INLET AND PIPE PROTECTION
- LIMITS OF CONSTRUCTION

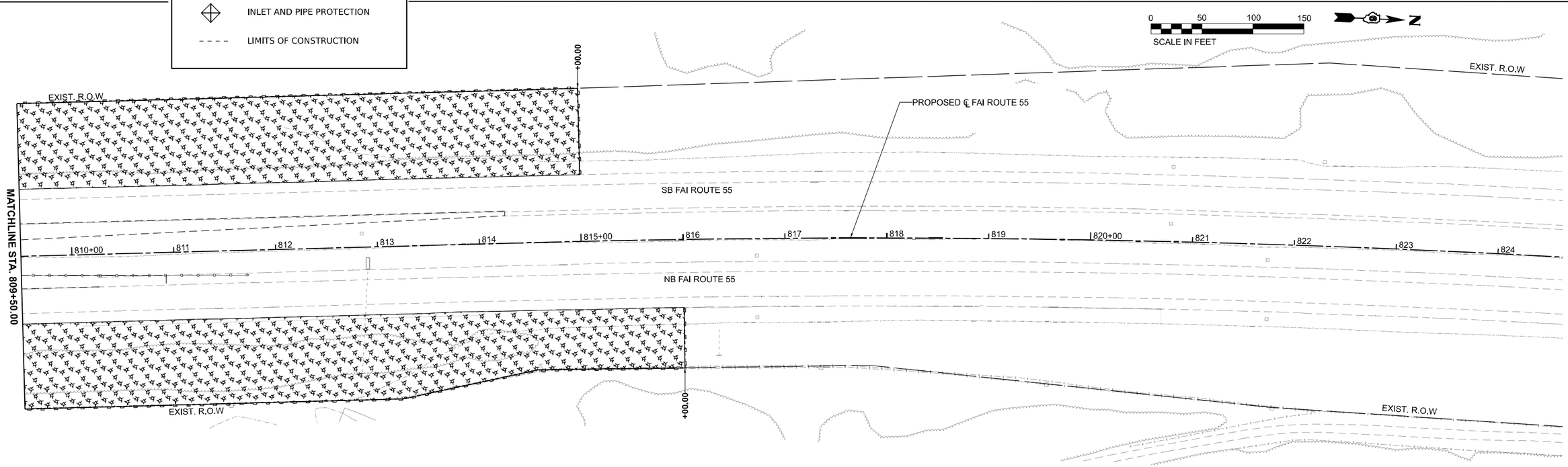

MODEL: PR_I55-Plan 3 [Sheet]
FILE NAME: pw://cmtengrpw.bentley.com:cmtengrpw-bentley.com:connect-projects/Documents/IDOT/21004105-004103-00/Sheets/72K98/D972K98sel-ErosionControl.dgn

CMT
License No. 184-000613
Copyright CMT, Inc.

USER NAME = rheady	DESIGNED - VJR	REVISED -	
	DRAWN - RAH	REVISED -	
PLOT SCALE = 0.16660000 ' / in.	CHECKED - KLT	REVISED -	
PLOT DATE = 3/25/2024	DATE - MARCH 2024	REVISED -	

STATE OF ILLINOIS
DEPARTMENT OF TRANSPORTATION

FAI ROUTE 55 - INTERSTATE 55
EROSION CONTROL PLANS

SCALE: 1" = 50' | SHEET 2 OF 2 SHEETS | STA. 794+50 TO STA. 824+50

F.A.I. RTE.	SECTION	COUNTY	TOTAL SHEETS	SHEET NO.
55	(84-2BR-1) D, BY, BP, BRR	SANGAMON	139	40
		CONTRACT NO. 72K98		
		ILLINOIS	FED. AID PROJECT	

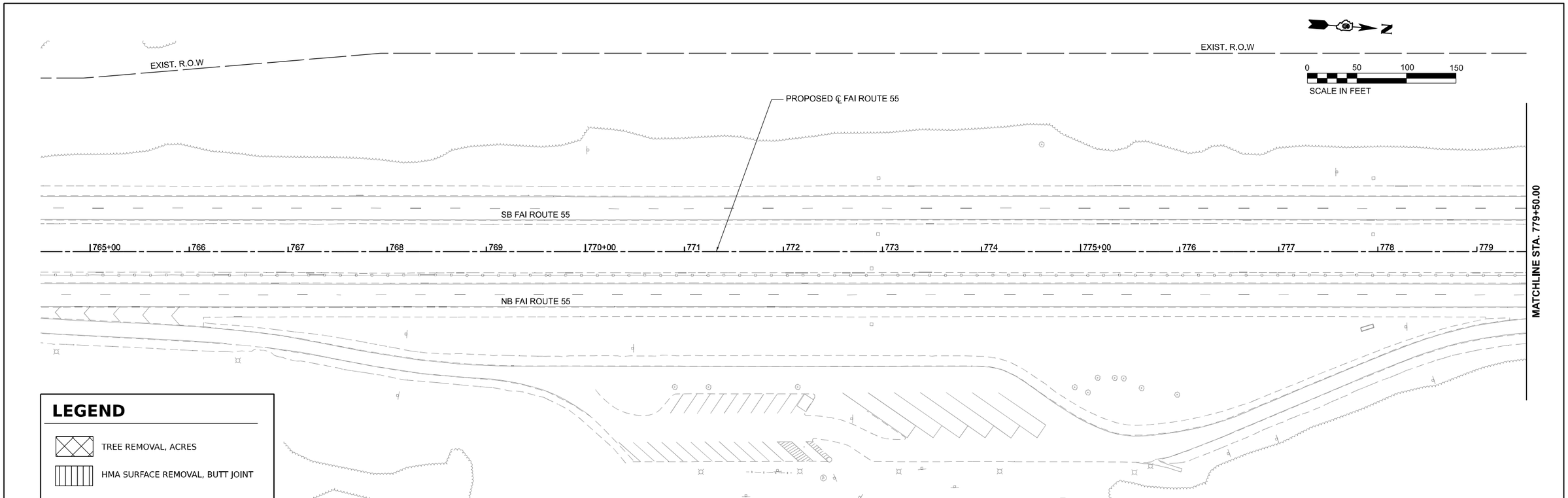

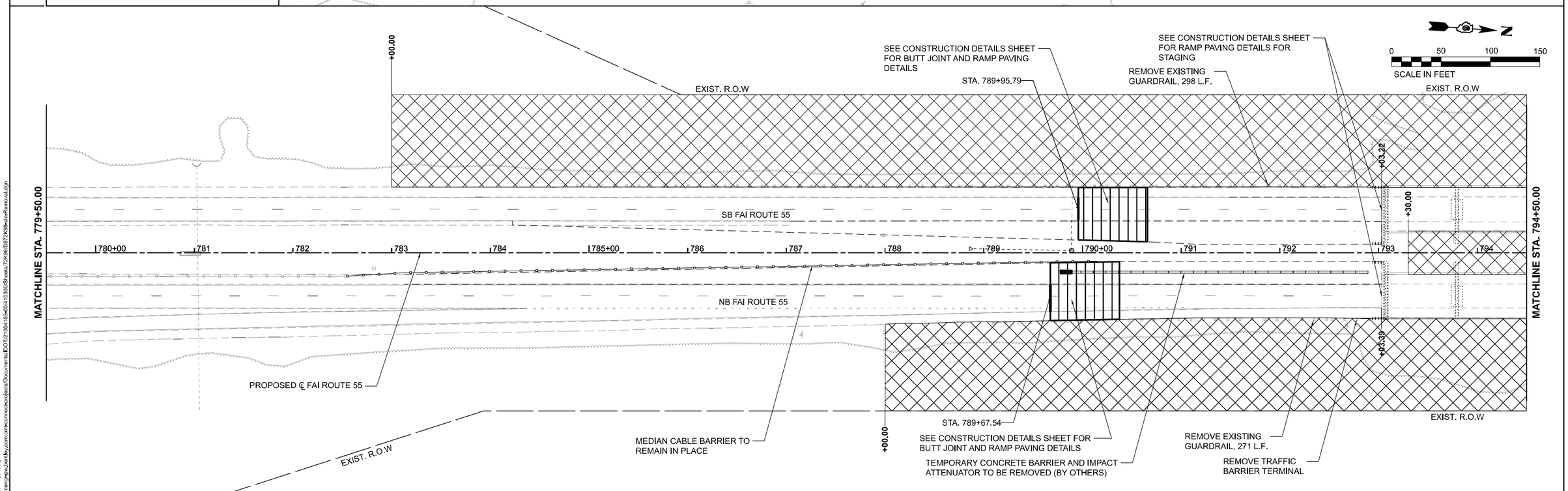

MODEL: PR_I55-Plan 1 [Sheet]
FILE NAME: pw://cmtengpw.bentley.com:cmtconnect-projects/Documents/D072/1064110-04/410300/Sheets/72K98/D072K98sht-PlanRemoval.dgn

CMT
License No. 184-000613

USER NAME = rheady	DESIGNED - VJR	REVISED -	
	DRAWN - RAH	REVISED -	
PLOT SCALE = 0.16666667 ' / in.	CHECKED - KLT	REVISED -	
PLOT DATE = 3/28/2024	DATE - MARCH 2024	REVISED -	

STATE OF ILLINOIS
DEPARTMENT OF TRANSPORTATION

FAI ROUTE 55 - INTERSTATE 55
REMOVAL PLANS

SCALE: 1" = 50' | SHEET 1 OF 2 SHEETS | STA. 764+50 TO STA. 794+50

F.A.I. RTE.	SECTION	COUNTY	TOTAL SHEETS	SHEET NO.
55	(84-2BR-1) D, BY, BP, BRR	SANGAMON	139	41
		CONTRACT NO. 72K98		
		ILLINOIS	FED. AID PROJECT	

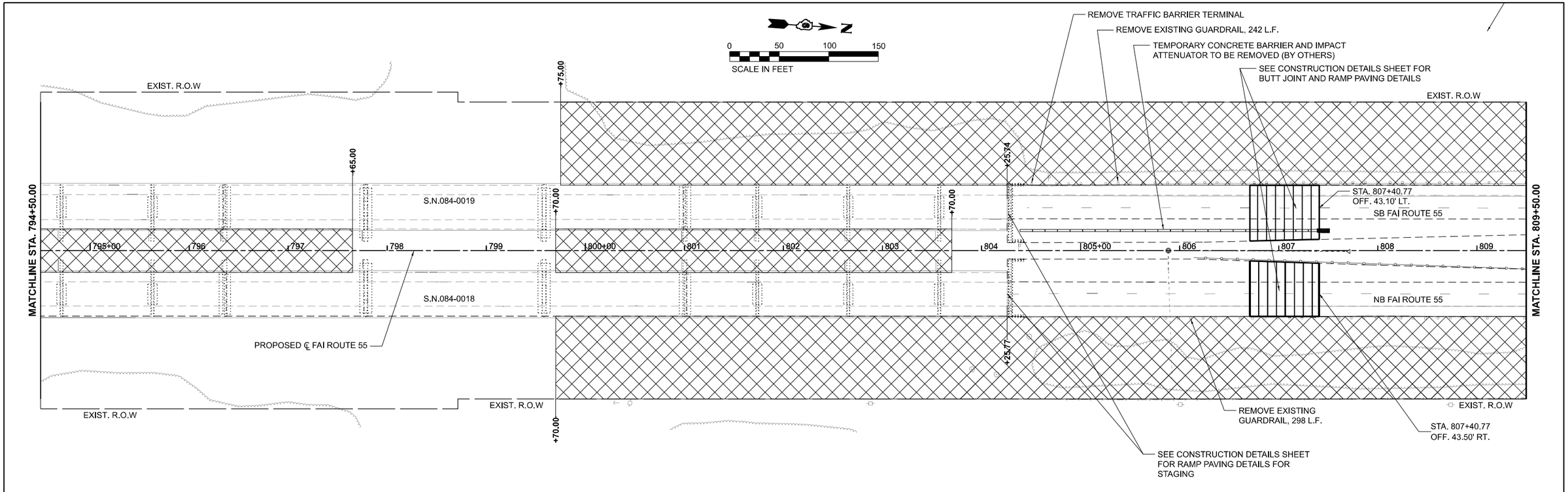

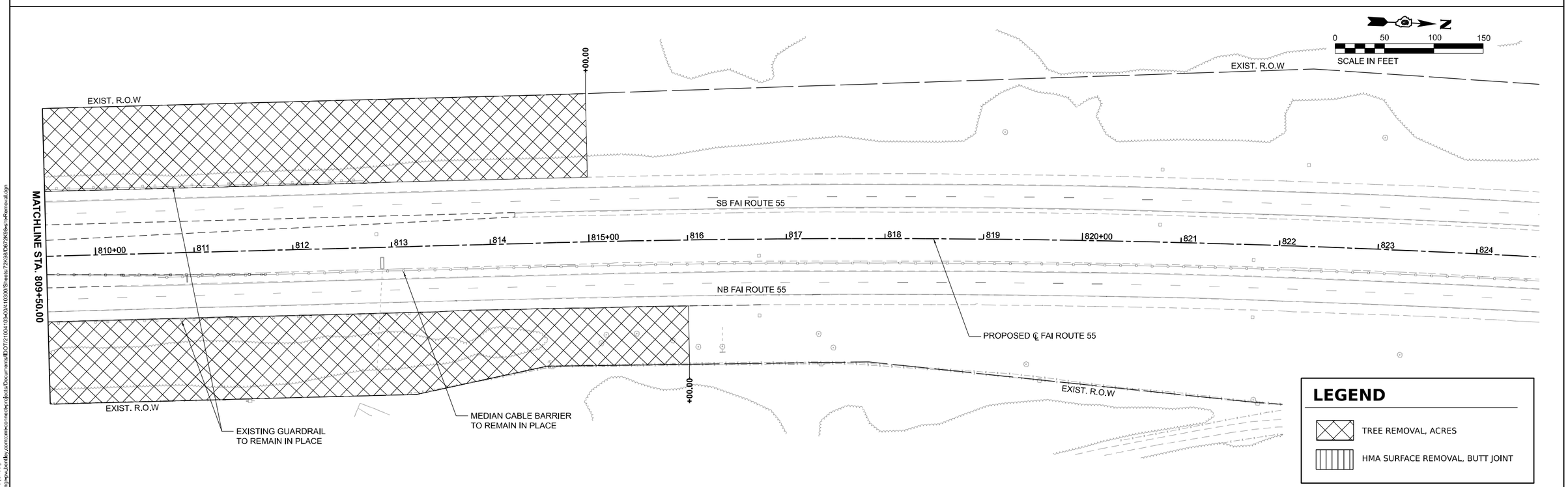

MODEL: PR_I55 - Plan 3 [Sheet]
FILE NAME: pw://cmtengrgroup.bentley.com:cmtecONNECTprojects/Documents/D07210410\40410300\Sheets/72K98\D072K98sht-Removal.dgn

CMT
License No. 184-000613

USER NAME = rheady	DESIGNED - VJR	REVISED -	
	DRAWN - RAH	REVISED -	
PLOT SCALE = 0.16666667 ' / in.	CHECKED - KLT	REVISED -	
PLOT DATE = 3/28/2024	DATE - MARCH 2024	REVISED -	

STATE OF ILLINOIS
DEPARTMENT OF TRANSPORTATION

FAI ROUTE 55 - INTERSTATE 55
REMOVAL PLANS

SCALE: 1" = 50' | SHEET 2 OF 2 SHEETS | STA. 794+50 TO STA. 824+50

F.A.I. RTE.	SECTION	COUNTY	TOTAL SHEETS	SHEET NO.
55	(84-2BR-1) D, BY, BP, BRR	SANGAMON	139	42
		CONTRACT NO. 72K98		
	ILLINOIS	FED. AID PROJECT		

BENCHMARK

BM TJM-126: FD Chiseled square on SE abutment of SBL Sangamon River Bridge. Sta. 793+03.12, Offset 8.63' Lt., Elev. 539.79.

BM TJM-127: FD Chiseled square on NW abutment of NBL Sangamon River Bridge. Sta. 804+26.20, Offset 8.82' Rt., Elev. 539.79.

TRAFFIC CONTROL

Staging will be utilized to maintain traffic during construction.

No salvage

EXISTING STRUCTURE

Structures 084-0018 and 084-0019 were constructed in 1963 under Section 84-2B-2F. The dual structures consist of eleven spans. Each structure measures 1125'-0" back-to-back abuments and has no skew. The bearing to bearing measurement for Spans 1, 4, 8, and 11 is 71'-9". For Spans 2, 3, 9, and 10 the bearing to bearing measurement is 91'-10", for Span 6 it is 180'-0", and for Spans 5 and 7 it is 141'-9". The original deck was a 7" thick concrete slab and was 35'-8" out-to-out deck. The deck was supported by W36 beams for all spans except Spans 5 thru 7, which were supported by a 87" deep built-up girder. In 1993, under Section 84-2BR-1, the bridge concrete decks were reconstructed and widened to be 47'-2" out to out with a 7½" thickness. One new girder line on each side of each structure was added with in kind beams and 87½" web plate girders. For all piers except piers 4 thru 7, the original pile supported hammer head piers were widened with wall piers supported on a single row of H-piles to accomodate the widened deck and for future widening. Piers 4 thru 7 were widened as hammer head piers on piles. The stub abutments were also widened to accomodate the wider deck and future widening.

DESIGN STRESSES

FIELD UNITS

NEW CONSTRUCTION
f'c = 4,000 psi (Superstructure)
fy = 60,000 psi (Reinforcement)
fy = 50,000 psi (M270 Grade 50)
fy = 36,000 psi (M270 Grade 36)
All structural steel shall be painted.

ORIGINAL STRUCTURE
fc = 1,400 psi
fs = 20,000 psi (Reinforcement)
fs = 18,000 psi (Structural steel)

1993 WIDENED STRUCTURE
f'c = 3,500 psi (Class X Concrete)
fy = 60,000 psi (Reinforcement)
fy = 50,000 psi (M270 Grade 50 Structural Steel)
fy = 36,000 psi (M270 Grade 36 Structural Steel)

DESIGN SPECIFICATIONS

2002 AASHTO LFD Bridge Design Specifications, 17th Edition

2006 Seismic Retrofitting Manual for Highway Structures: Part 1 - Bridges (FHWA-HRT-06-032)

LOADING HS20-44

Allow 25 psf for future wearing surface.

SEISMIC DATA

Seismic Retrofit Category (SRC) = A
Design Sprectral Acceleration at 1.0 sec (SD1) = 0.131g
Design Spectral Acceleration at 0.2 secs (SDS) = 0.199g
Soil Site Class = D
Performance Level = PL 1

PROPOSED WORK:

1. Deck replacement and widening with new girders.
2. Clean and paint existing structural steel.
3. Structural steel repair.
4. Replace all bearings.
5. Pier and abutment concrete repair.
6. Concrete slopewall repair.

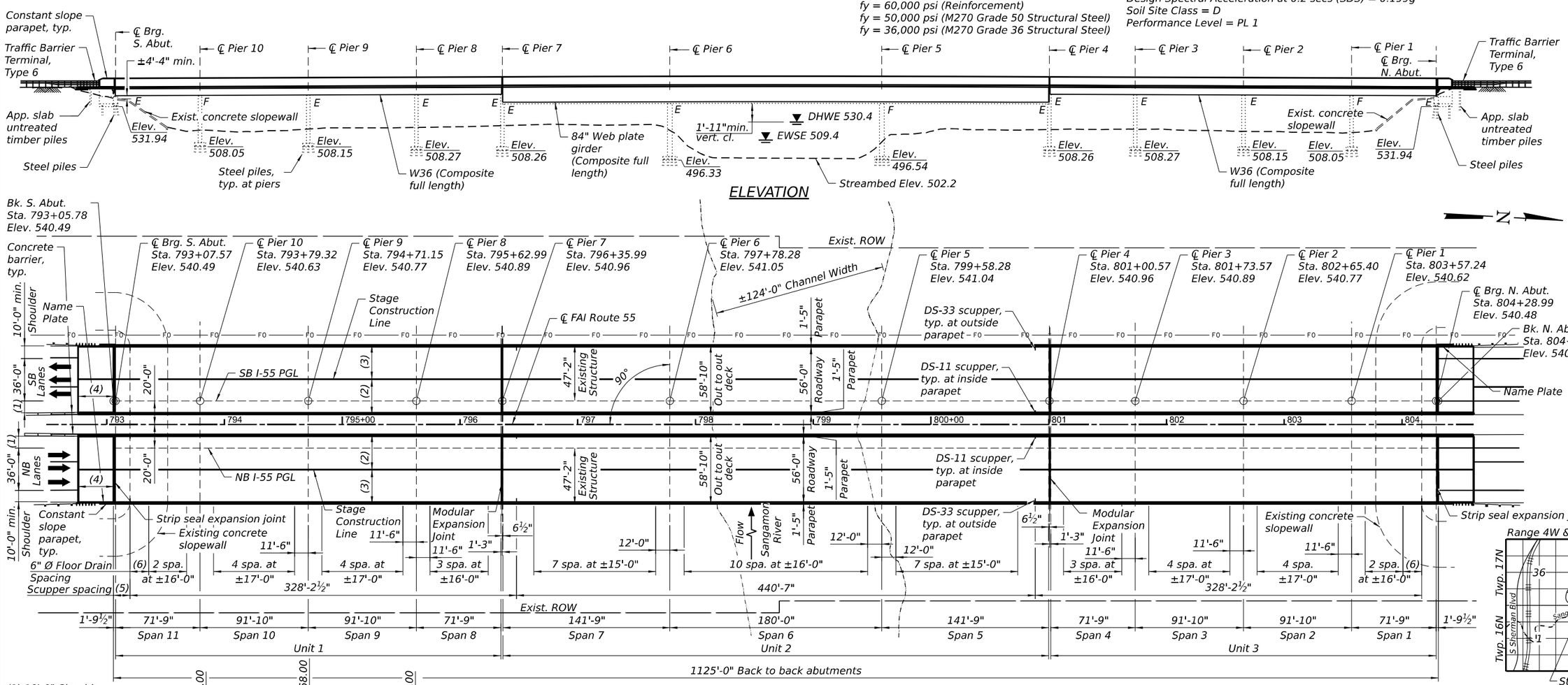

(1) 10'-0" Shoulder
(2) 29'-10½" Stage I
(3) 28'-11½" Stage II
(4) 30'-0" Approach Slab
(5) 14'-0" Scupper Spacing to Back of Abutment
(6) 16'-0"

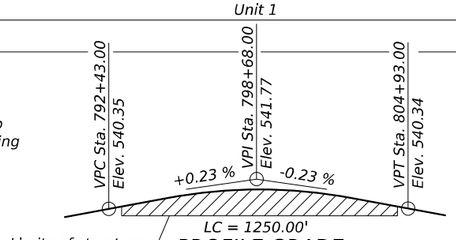

PROFILE GRADE

(Along I-55 NB & SB PGL)

(Up to ¼ in. to be ground off the bridge deck and the bridge approach slabs. The Profile Grade shows the final grade after grinding.)

PLAN

(Stations and elevations shown on the piers and abutments on the SB bridge are the same for the NB bridge)

Notes:
1. Elevations shown on plan view are after grinding.
2. See sheet 2 of 67 for Waterway Information table and Design Scour Elevation table.
3. Proposed floor drain spacings are intended to match existing floor drain locations. Contractor shall field verify the existing spacings in the field prior to floor drain installation.

LEGEND

—FO— Existing Lumen fiber optic

LICENSED STRUCTURAL ENGINEER
DENISE HERRERA
081-008841
STATE OF ILLINOIS
03/21/24
Exp. Date 11/30/2024

"I certify that to the best of my knowledge, information and belief, this design is structurally adequate for the design loading shown on the plans. The design is an economical one for the style of the structure and complies with the requirements of the current Design Specifications listed."

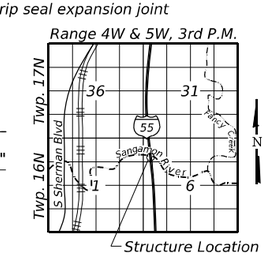

LOCATION SKETCH

GENERAL PLAN AND ELEVATION
I-55 OVER SANGAMON RIVER
FAI ROUTE 55 SEC. (84-2BR-1)D,BY,BP,BRR
SANGAMON COUNTY
STATION 798+68.28
STRUCTURE NO. 084-0018 (NB)
STRUCTURE NO. 084-0019 (SB)

FILE NAME: pw://cmtengr-pw.bentley.com:cmtengr-projects/Documents/DOT21004103-20411030/Bridge/Sangamon River Bridges/CADD_Sheets/0840018 & 0840019-72K98-001-General Plan & Elevation

CMT
License No. 184-000813
© Copyright CMT, Inc.

USER NAME = bholland	DESIGNED - DH	REVISED -	
	DRAWN - BLH	REVISED -	
PLOT SCALE = N/A	CHECKED - DH	REVISED -	
PLOT DATE = 3/21/2024	DATE - MARCH 2024	REVISED -	

STATE OF ILLINOIS
DEPARTMENT OF TRANSPORTATION

GENERAL PLAN AND ELEVATION
STRUCTURE NO. 084-0018 (NB) & 084-0019 (SB)

SCALE: | SHEET 1 OF 67 SHEETS | STA. | TO STA.

F.A.I. RTE.	SECTION	COUNTY	TOTAL SHEETS	SHEET NO.
55	(84-2BR-1)D,BY,BP,BRR	SANGAMON	139	43
		CONTRACT NO. 72K98		
		ILLINOIS	FED. AID PROJECT	

GENERAL NOTES

1. Fasteners shall be ASTM F 3125 Grade A325 Type I, mechanically galvanized bolts in painted areas. Bolts 7/8 in. dia., holes 15/16 in. dia., unless otherwise noted.

2. Calculated weight of new Structural Steel:
   M270 Grade 36 = 159,017 lbs.
   M270 Grade 50 = 1,121,610 lbs.

3. No field welding is permitted except as specified in the contract documents.

4. Reinforcement bars designated (E) shall be epoxy coated.

5. Prior to pouring the new concrete deck, all heavy or loose rust, loose mill scale, and other loose detrimental foreign material shall be removed from the surfaces in contact with concrete (SSPC-SP3 standards). Tightly adhered paint may remain unless otherwise noted. Removal shall be accomplished by methods that will not damage the steel and the cost will be paid for according to "Article 109.04 of the Standard Specifications.

   As directed by the Engineer, existing construction accessories welded to the top flange of beams and girders shall be removed. The weld areas shall be ground flush and inspected for cracks using magnetic particle testing (MT) or dye penetrant testing (PT) by qualified personnel approved by the Engineer. Any cracks that cannot be removed by grinding 1/4 in. deep shall be identified and reported to the Bureau of Bridges & Structures for further disposition. The cost of removing welded accessories, grinding, and inspecting weld areas and grinding cracks will be paid for according to Article 109.04 of the Standard Specifications.

6. If the Contractor elects to use cantilever forming brackets on the exterior beams or girders, the brackets shall be placed at the same locations as required for the hardwood blocks in Article 503.06(b) of the Standard Specifications. If additional cantilever forming brackets are required, hardwood blocking shall be wedged between the exterior and first interior girder at each of these additional bracket locations.

7. Bearing seat surfaces shall be constructed or adjusted to the designated elevations within a tolerance of 1/8 in. (0.01 ft.). Adjustment shall be made either by grinding the surface or by shimming the bearings.

8. Plan dimensions and details relative to the existing structure have been taken from existing plans and are subject to nominal construction variations. The Contractor shall field verify existing dimensions and details affecting new construction and make necessary approved adjustments prior to construction or ordering of materials. Such variations shall not be cause for additional compensation for a change in scope of the work, however, the Contractor will be paid for the quantity actually furnished at the unit price bid for the work.

9. The existing structural steel coating contains lead. The Contractor shall take appropriate precautions to address the presence of lead on this project.

10. Cleaning and painting of the existing and new structural steel shall be as specified in the special provision for "Cleaning and Painting Existing Steel Structures". All steel shall be cleaned per Near White Blast Cleaning – SSPC-SP10. All steel shall be painted according to the requirements of Paint System 1 - OZ/E/U. The color of the final finish coat for all interior steel surfaces shall be Gray, Munsell No. 5B 7/1. The color of the final finish coat for the exterior and bottom flange of the fascia beams shall be Interstate Green, Munsell No. 7.5G 4/8.

11. All proposed structural steel (excluding beams) and steel components of bearings located underneath expansion joints shall be hot-dipped galvanized per the special provisions.

12. SSPC QP1 (and QP2) Contractor Certification is Required for this Contract.

13. A film forming Concrete Sealer shall be applied to horizontal surfaces and a penetrating Concrete Sealer on the vertical surfaces for new concrete under the expansion joints.

14. No torch cutting of existing reinforcement is allowed.

15. Following deck & diaphragm/cross-frame removal, the Stage I beams/girders shall be raised by three inches (3") in order to avoid excessive fillet heights. See special provision for Jacking Existing Superstructure.

16. A structural assessment report shall be submitted for removal and replacement of diaphragms or cross frames, jacking of beams and girders, and removal of rivets or bolts in the existing built-up girders for steel repairs. See Special Provisions for Structural Assessment Reports.

17. Current Ratings on File for Existing Structure
    SN 084-0018:
    Inventory: HS16
    Operating: HS20.8
    Live Load Restrictions: No
    SN 084-0019:
    Inventory: HS16
    Operating: HS20.8
    Live Load Restrictions: No

Inventory and Operating Ratings and Live Load Restrictions are provided for information only. Inventory and Operating Ratings are based on HS loading and configuration. Live Load restrictions are based on Illinois legal loads and configurations. The Ratings and Live Load Restrictions are not necessarily representative of capacities to support the Contractor's equipment.

INDEX OF SHEETS

TOTAL BILL OF MATERIAL

ITEM	UNIT	SUPER	SUB	TOTAL
Porous Granular Backfill	Cu. Yd.		34	34
Concrete Removal	Cu. Yd.		76.4	76.4
Slope Wall Removal	Sq. Yd.		80	80
Removal of Existing Concrete Deck	Each	2		2
Floor Drains	Each	244		244
Concrete Structures	Cu. Yd.		194.4	194.4
Concrete Superstructure	Cu. Yd.	4,429.0		4,429.0
Protective Coat	Sq. Yd.	17,034		17,034
Concrete Superstructure (Approach Slab)	Cu. Yd.	314.8		314.8
Furnishing and Erecting Structural Steel	L Sum	1		1
Stud Shear Connectors	Each	35,124		35,124
Reinforcement Bars, Epoxy Coated	Pound	1,217,860	15,460	1,233,320
Bar Splicers	Each	8,688	60	8,748
Slope Wall 6 Inch	Sq. Yd.		80	80
Name Plates	Each	2		2
Preformed Joint Strip Seal	Foot	236		236
Elastomeric Bearing Assembly, Type I	Each		138	138
Elastomeric Bearing Assembly, Type II	Each		58	58
Anchor Bolts, 3/4"	Each		232	232
Anchor Bolts, 1"	Each		384	384
Concrete Sealer	Sq. Ft.		3,489	3,489
Bridge Deck Grooving (Longitudinal)	Sq. Yd.	9,470		9,470
Bar Terminator	Each	3,592		3,592
High Load Multi-Rotational Bearings, Disc, Fixed-400k	Each		18	18
High Load Multi-Rotational Bearings, Disc, Guided Expansion-400k	Each		18	18
Jack and Remove Existing Bearings	Each	132		132
Structural Steel Removal	Pound	94,540		94,540
Structural Steel Repair	Pound	57,005		57,005
Containment and Disposal of Lead Paint Cleaning Residues No. 1	L Sum	1		1
Containment and Disposal of Lead Paint Cleaning Residues No. 2	L Sum	1		1
Cleaning and Painting Steel Bridge No. 1	L Sum	1		1
Cleaning and Painting Steel Bridge No. 2	L Sum	1		1
Structural Repair of Concrete (Depth Equal to or Less than 5 inches)	Sq. Ft.		173	173
Structural Repair of Concrete (Depth Greater than 5 inches)	Sq. Ft.		42	42
Drainage Scuppers, DS-11	Each	8		8
Drainage Scuppers, DS-33	Each	8		8
Diamond Grinding (Bridge Section)	Sq. Yd.	13,678		13,678
Jacking Existing Superstructure	L Sum	1		1
Modular Expansion Joint, 6"	Foot	118		118
Modular Expansion Joint, 9"	Foot	118		118
Slope Wall Repair	Sq. Yd.		209	209
Slope Wall Slurry Pumping	Cu. Yd.		14	14

WATERWAY INFORMATION

Drainage Area = 2,731 sq. mi. Low Grade Elev. 540.00 @ Sta. 790+53.37

Flood	Freq. Yr.	Q C.F.S.	Opening Ft² Exist.	Opening Ft² Prop.	Nat. H.W.E.	Head - Ft. Exist.	Head - Ft. Prop.	Headwater El. Exist.	Headwater El. Prop.
	10	31,550	12,102	12,102	527.7	0.1	0.1	527.8	527.8
Design	50	42,800	14,716	14,716	530.2	0.2	0.2	530.4	530.4
Base	100	46,850	16,285	16,285	531.7	0.2	0.2	531.9	531.9
Scour Check	200	53,040	17,491	17,491	533.2	0.2	0.2	533.4	533.4
Max. Calc.	500	60,450	18,753	18,753	535.2	0.3	0.3	535.5	535.5

Existing and proposed 10 year average velocity = 2.6 ft/s

STA. 798+68.28
RE-BUILT 20__ BY
STATE OF ILLINOIS
F.A.I. RT. 55
SEC. (84-2BR-1)D,BY,BP,BRR
LOADING HS20-44
STR. NO. 084-0018

NAME PLATE
See Std. 515001

STA. 798+68.28
RE-BUILT 20__ BY
STATE OF ILLINOIS
F.A.I. RT. 55
SEC. (84-2BR-1)D,BY,BP,BRR
LOADING HS20-44
STR. NO. 084-0019

NAME PLATE
See Std. 515001

Existing Name Plate shall be cleaned and relocated next to the new Name Plate. Cost included with Name Plates.

DESIGN SCOUR ELEVATION TABLE

Event / Limit	Design Scour Elevations (ft.)												Item
State	S. Abut.	Pier 10	Pier 9	Pier 8	Pier 7	Pier 6	Pier 5	Pier 4	Pier 3	Pier 2	Pier 1	N. Abut.	113
Q100	531.94	513.04	513.04	513.04	495.92	495.92	495.92	495.92	513.27	513.27	513.27	531.94	5
Design	531.94	508.05	508.05	508.27	495.92	495.92	495.92	495.92	508.27	508.15	508.05	531.94	

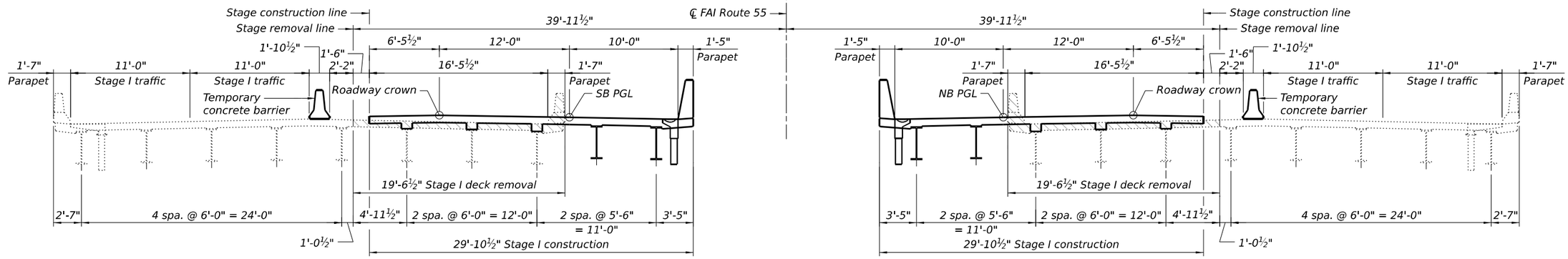

UNITS 1 AND 3 CROSS SECTION

(Looking North)

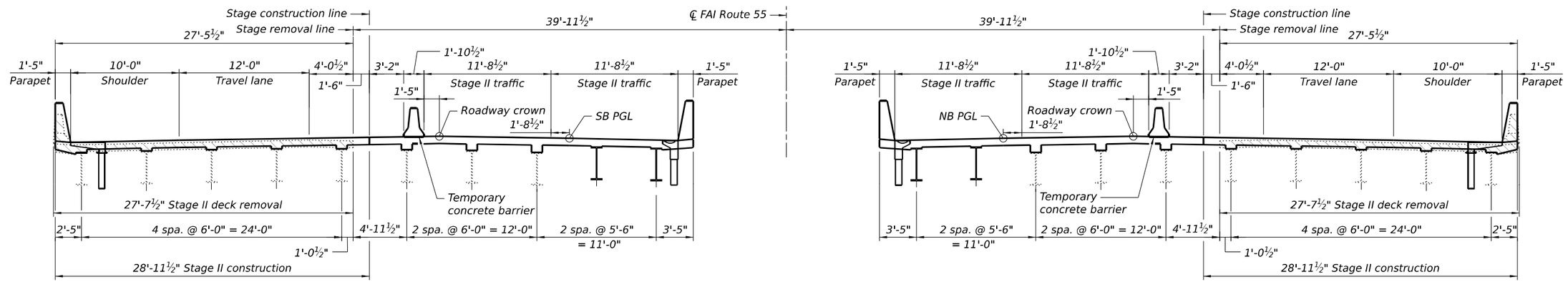

UNITS 1 AND 3 CROSS SECTION

(Looking North)

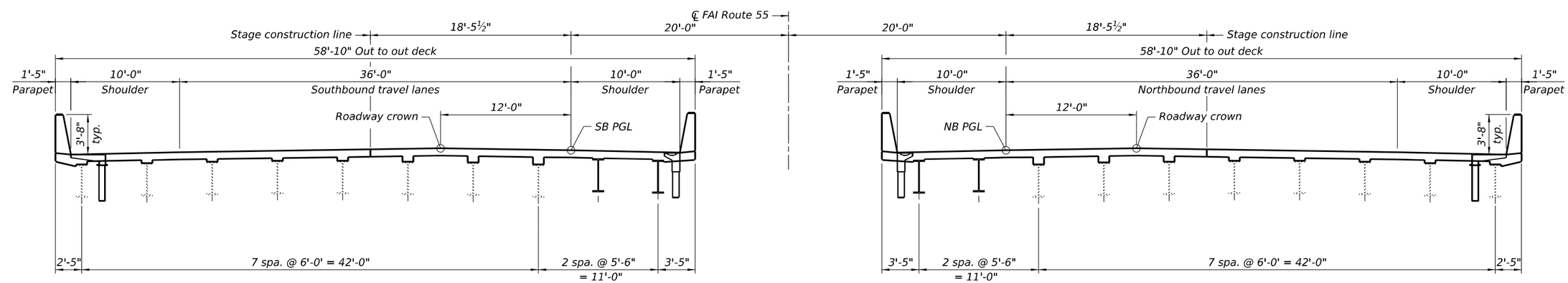

UNITS 1 AND 3 CROSS SECTION

(Looking North)

LEGEND

Existing concrete deck removal

Note:
For quantity of Temporary Concrete Barrier, see Roadway Plans.

FILE NAME: pw://cmtengp-pw.bentley.com:cmt-connect-projects/Documents:IDOT/21004103-00/410300/Bridge:Sangamon River Bridges/CADD_Sheets/0840018 & 0840019-72K98-003-Staging Details - Units 1 & 3

CMT
License No. 184-000613
© Copyright CMT, Inc.

USER NAME = bholland	DESIGNED - DH	REVISED -	
	DRAWN - DH	REVISED -	
PLOT SCALE = N/A	CHECKED - DH	REVISED -	
PLOT DATE = 3/21/2024	DATE - MARCH 2024	REVISED -	

STATE OF ILLINOIS
DEPARTMENT OF TRANSPORTATION

STAGING DETAILS - UNITS 1 & 3
STRUCTURE NO. 084-0018 (NB) & 084-0019 (SB)

SCALE: | SHEET 3 OF 67 SHEETS | STA. | TO STA.

F.A.I. RTE.	SECTION	COUNTY	TOTAL SHEETS	SHEET NO.
55	(84-2BR-1)D,BY,BP,BRR	SANGAMON	139	45
		CONTRACT NO. 72K98		
		ILLINOIS	FED. AID PROJECT	

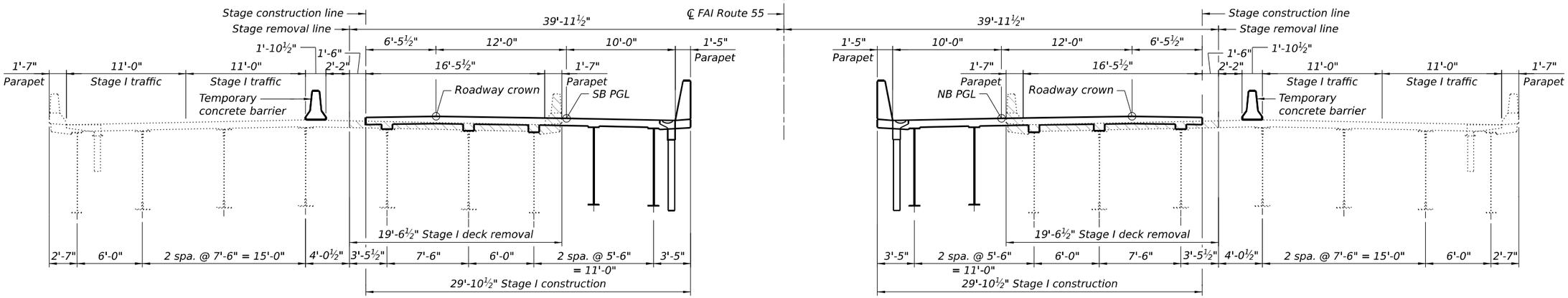

UNIT 2 CROSS SECTION

(Looking North)

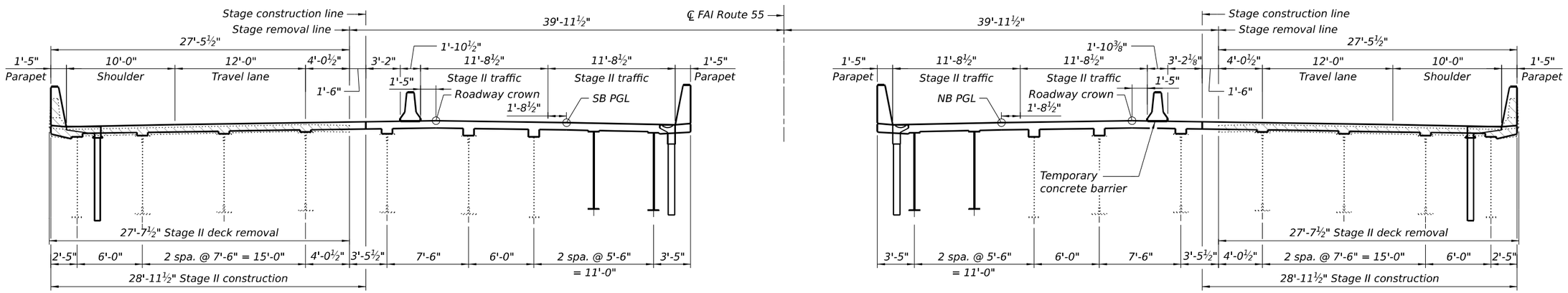

UNIT 2 CROSS SECTION

(Looking North)

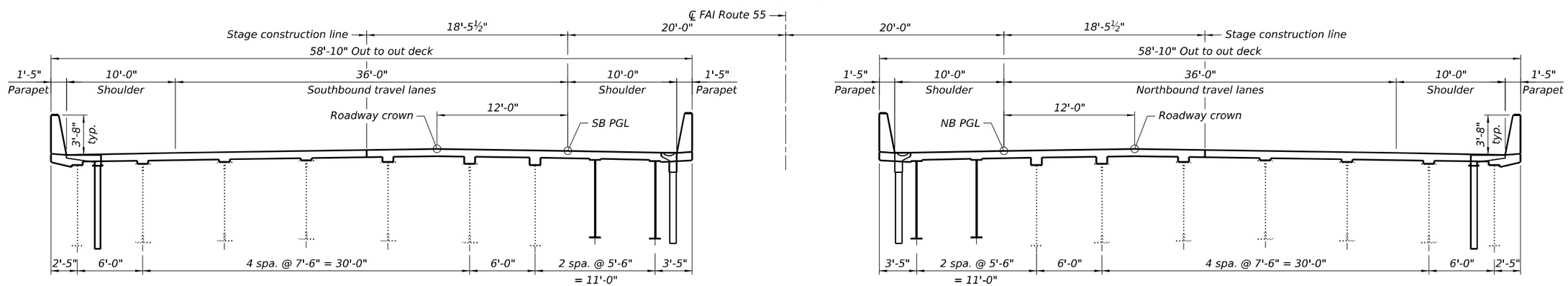

UNIT 2 CROSS SECTION

(Looking North)

LEGEND

Existing concrete deck removal

Note:
For quantity of Temporary Concrete Barrier, see Roadway Plans.

FILE NAME: pw://cmtengi-pw.bentley.com:cmt-connect-projects/Documents/IDOT/21094103-00/410300/Bridge/Sangamon River Bridges/CADD_Sheets/0840018 & 0840019-72K98-004-Staging Details - Unit 2

CMT
License No. 184-000813

USER NAME = bholland	DESIGNED - DH	REVISED -	
	DRAWN - DH	REVISED -	
PLOT SCALE = N/A	CHECKED - DH	REVISED -	
PLOT DATE = 3/21/2024	DATE - MARCH 2024	REVISED -	

STATE OF ILLINOIS
DEPARTMENT OF TRANSPORTATION

STAGING DETAILS - UNIT 2
STRUCTURE NO. 084-0018 (NB) & 084-0019 (SB)

SCALE: | SHEET 4 OF 67 SHEETS | STA. | TO STA.

F.A.I. RTE.	SECTION	COUNTY	TOTAL SHEETS	SHEET NO.
55	(84-2BR-1)D,BY,BP,BRR	SANGAMON	139	46
		CONTRACT NO.	72K98	
		ILLINOIS	FED. AID PROJECT	

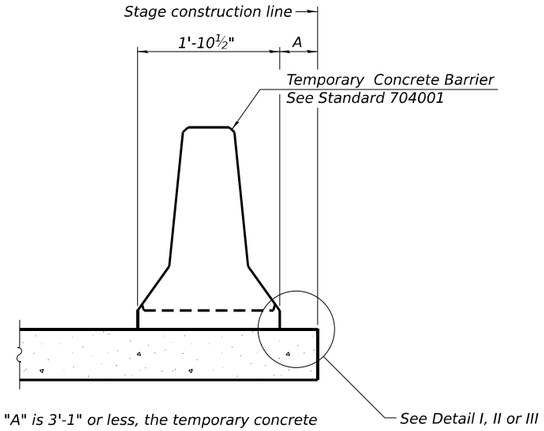

When "A" is 3'-1" or less, the temporary concrete barrier shall be restrained to the new slab according to Detail I, II or III. No restraint is required when "A" is greater than 3'-1".

NEW SLAB OR NEW DECK BEAM

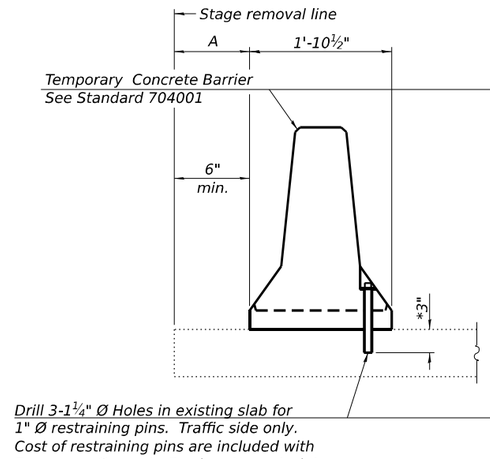

EXISTING SLAB

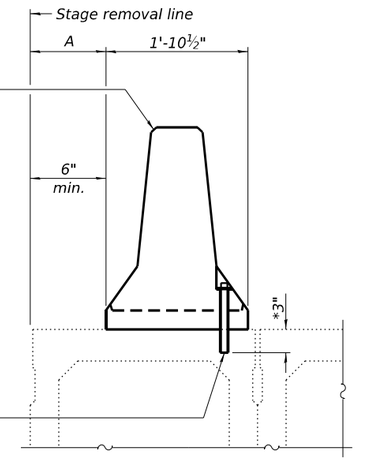

* When hot-mix asphalt wearing surface is present, embedment shall be 3" plus the wearing surface depth.

EXISTING DECK BEAM

SECTIONS THRU SLAB OR DECK BEAM

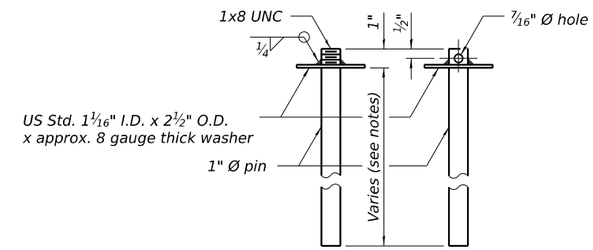

RESTRAINING PIN

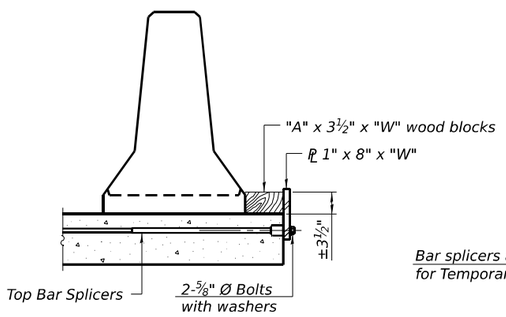

DETAIL I

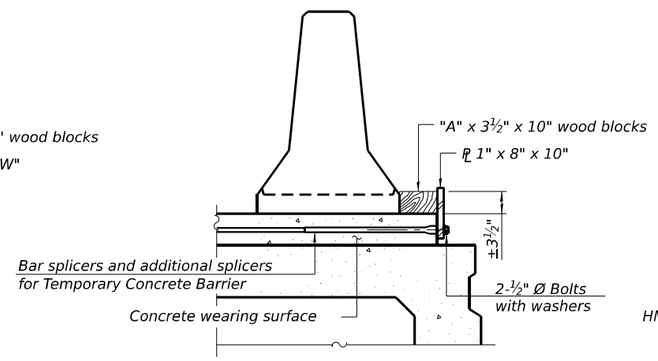

DETAIL II

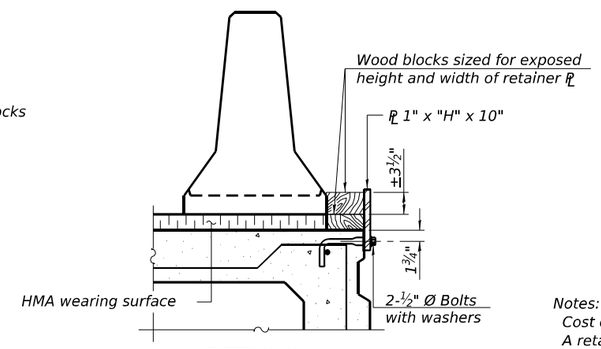

DETAIL III

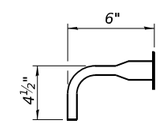

BAR SPLICER FOR #4 BAR - DETAIL III

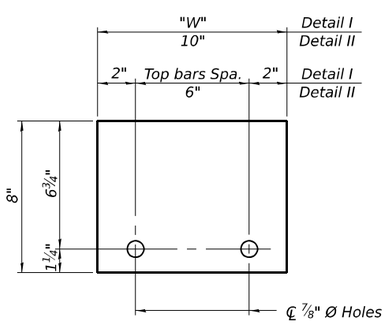

STEEL RETAINER PL 1" x 8" x "W"

(Detail I and II)

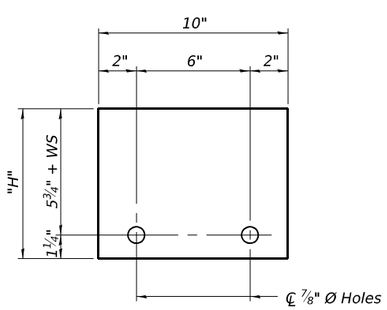

STEEL RETAINER PL 1" x "H" x 10"

(Detail III)

RAILING CRITERIA

NCHRP 350 Test Level	3
Railing Weight (plf)	440

Notes:

Cost of retainer assembly is included with Temporary Concrete Barrier.

A retainer assembly shall be located at the approximate ¡ of each temporary concrete barrier.

The retainer plate shall not be removed until the concrete on the adjacent stage is ready to be poured. For Detail III applications the retainer plate shall not be removed until just prior to placing the adjacent beam.

When the 'A' dimension is less than 1½", the wood block shall be omitted and the barrier shall be placed in direct contact with the steel retainer plate. For deck beam applications the minimum required 'A' distance is 6" to accommodate the shear key clamping device.

Detail I - Installation for a new bridge deck or bridge slab.

Detail II - Installation for a new deck beam with an initial concrete wearing surface. Additional bar splicers shall be provided at 6'-0" centers and paired with the bar splicers of the concrete wearing surface reinforcement to accommodate the installation of the retainer assemblies. The cost of the additional bar splicers is included with the concrete wearing surface.

Detail III - Installation for a new deck beam with no initial wearing surface or with an initial hot-mix asphalt (HMA) wearing surface present. The deck beam directly beneath the temporary concrete barrier shall be fabricated with bar splicer inserts in the side of the beam, as detailed, to accommodate the installation of the retainer assemblies. A pair of bar splicers, 6" apart, shall be placed at 6'-0" centers along the length of the beam. The cost of the bar splicers is included with the deck beam.

R-27

5-15-2023

FILE NAME: pw://cmtengp-pw.bentley.com:cmt-connect-projects/Documents/IDOT/21004103-00/410300/Bridge/Sangamon River Bridges/CADD_Sheets/0840015-72K98-005-Temporary Concrete Barrier

CMT
License No. 184-000613

USER NAME = bholland	DESIGNED - BLH	REVISED -	
	DRAWN - BLH	REVISED -	
PLOT SCALE = N/A	CHECKED - DH	REVISED -	
PLOT DATE = 3/21/2024	DATE - MARCH 2024	REVISED -	

STATE OF ILLINOIS
DEPARTMENT OF TRANSPORTATION

TEMPORARY CONCRETE BARRIER
STRUCTURE NO. 084-0018 (NB) & 084-0019 (SB)

SCALE: | SHEET 5 OF 67 SHEETS | STA. | TO STA.

F.A.I. RTE.	SECTION	COUNTY	TOTAL SHEETS	SHEET NO.
55	(84-2BR-1)D,BY,BP,BRR	SANGAMON	139	47
		CONTRACT NO. 72K98		
		ILLINOIS FED. AID PROJECT		

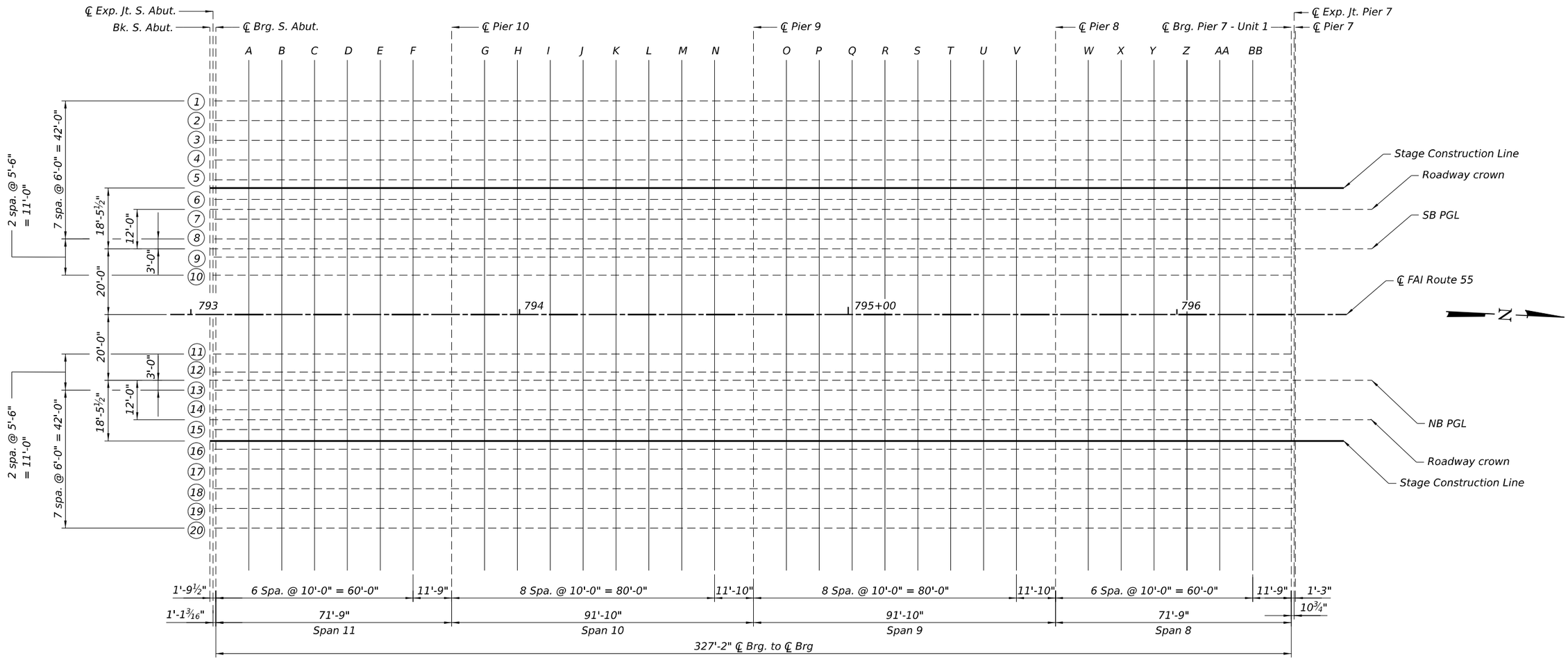

DECK ELEVATION LAYOUT - UNIT 1

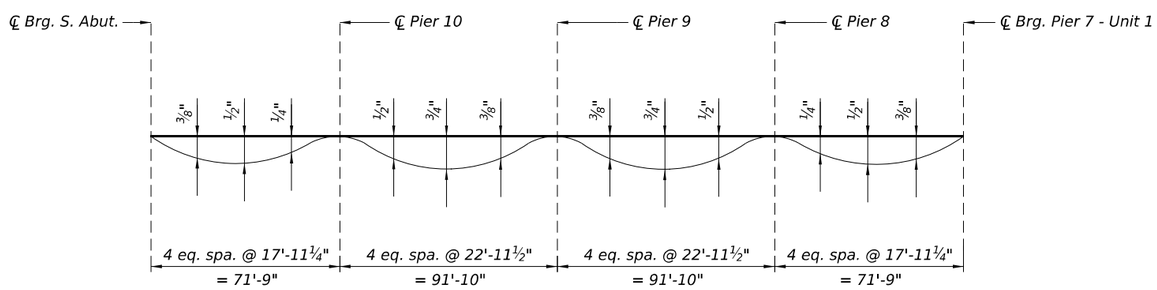

DEAD LOAD DEFLECTION DIAGRAM

(For new beams only.)
(Includes weight of concrete only.)

Note:
The above deflections are not to be used in the field if the engineer is working from the grade elevations adjusted for dead load deflections as shown on sheets 7 through 10 of 67.

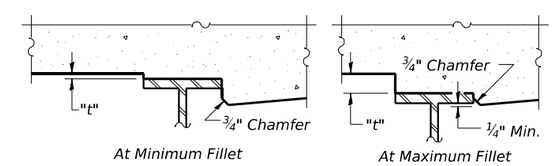

After all structural steel has been erected, elevations of the top flanges of the beams shall be taken at intervals shown on this sheet. These elevations subtracted from the "Theoretical Grade Elevations Adjusted for Dead Load Deflection" shown on sheets 7 thru 10 of 67, minus slab thickness, equals the fillet heights "t" above top flange of beams.

FILLET HEIGHTS

FILE NAME: pw://cmtengp-pw.bentley.com:cmt-connect-projects/Documents:IDOT/21004103-00/41030/Bridge/Sangamon River Bridge/CADD_Sheets/0840018 & 0840019-72K98-A006-Deck Elevations - I

CMT License No. 184-000613 © Copyright CMT, Inc.	USER NAME = bholland	DESIGNED - MAC	REVISED -	STATE OF ILLINOIS DEPARTMENT OF TRANSPORTATION	DECK ELEVATIONS - I STRUCTURE NO. 084-0018 (NB) & 084-0019 (SB)
		DRAWN - VT	REVISED -		
	PLOT SCALE = N/A	CHECKED - DH	REVISED -		
	PLOT DATE = 3/21/2024	DATE - MARCH 2024	REVISED -		SCALE: SHEET 6 OF 67 SHEETS STA. TO STA.

F.A.I. RTE.	SECTION	COUNTY	TOTAL SHEETS	SHEET NO.
55	(84-2BR-1)D,BY,BP,BRR	SANGAMON	139	48
		CONTRACT NO. 72K98		
		ILLINOIS FED. AID PROJECT		

BEAM 1 & BEAM 20

Location	Station	Offset Beam 1/ Beam 20	Theoretical Grade Elevations	Theoretical Grade Elevations Adjusted For Dead Load Deflection and Grinding
Bk. S. Abut.	793+05.78	-45.00 / 45.00	540.13	540.15
CL Exp. Jt. S. Abut.	793+06.88	-45.00 / 45.00	540.13	540.15
CL Brg. S. Abut.	793+07.57	-45.00 / 45.00	540.13	540.15
A	793+17.57	-45.00 / 45.00	540.15	540.19
B	793+27.57	-45.00 / 45.00	540.17	540.23
C	793+37.57	-45.00 / 45.00	540.19	540.26
D	793+47.57	-45.00 / 45.00	540.21	540.27
E	793+57.57	-45.00 / 45.00	540.23	540.28
F	793+67.57	-45.00 / 45.00	540.25	540.28
CL Pier 10	793+79.32	-45.00 / 45.00	540.27	540.29
G	793+89.32	-45.00 / 45.00	540.28	540.31
H	793+99.32	-45.00 / 45.00	540.30	540.35
I	794+09.32	-45.00 / 45.00	540.32	540.39
J	794+19.32	-45.00 / 45.00	540.33	540.41
K	794+29.32	-45.00 / 45.00	540.35	540.43
L	794+39.32	-45.00 / 45.00	540.37	540.44
M	794+49.32	-45.00 / 45.00	540.38	540.43
N	794+59.32	-45.00 / 45.00	540.40	540.43
CL Pier 9	794+71.15	-45.00 / 45.00	540.41	540.43
O	794+81.15	-45.00 / 45.00	540.43	540.46
P	794+91.15	-45.00 / 45.00	540.44	540.49
Q	795+01.15	-45.00 / 45.00	540.46	540.53
R	795+11.15	-45.00 / 45.00	540.47	540.55
S	795+21.15	-45.00 / 45.00	540.48	540.56
T	795+31.15	-45.00 / 45.00	540.49	540.56
U	795+41.15	-45.00 / 45.00	540.51	540.57
V	795+51.15	-45.00 / 45.00	540.52	540.56
CL Pier 8	795+62.99	-45.00 / 45.00	540.53	540.55
W	795+72.99	-45.00 / 45.00	540.54	540.57
X	795+82.99	-45.00 / 45.00	540.55	540.59
Y	795+92.99	-45.00 / 45.00	540.56	540.62
Z	796+02.99	-45.00 / 45.00	540.57	540.63
AA	796+12.99	-45.00 / 45.00	540.58	540.64
BB	796+22.99	-45.00 / 45.00	540.59	540.64
CL Brg. Pier 7	796+34.74	-45.00 / 45.00	540.60	540.62
CL Exp. Jt. Pier 7	796+35.63	-45.00 / 45.00	540.60	540.62
CL Pier 7	796+35.99	-45.00 / 45.00	540.60	540.62

BEAM 2 & BEAM 19

Location	Station	Offset Beam 2/ Beam 19	Theoretical Grade Elevations	Theoretical Grade Elevations Adjusted For Dead Load Deflection and Grinding
Bk. S. Abut.	793+05.78	-39.00 / 39.00	540.25	540.27
CL Exp. Jt. S. Abut.	793+06.88	-39.00 / 39.00	540.25	540.27
CL Brg. S. Abut.	793+07.57	-39.00 / 39.00	540.25	540.27
A	793+17.57	-39.00 / 39.00	540.27	540.31
B	793+27.57	-39.00 / 39.00	540.29	540.35
C	793+37.57	-39.00 / 39.00	540.31	540.38
D	793+47.57	-39.00 / 39.00	540.33	540.39
E	793+57.57	-39.00 / 39.00	540.35	540.40
F	793+67.57	-39.00 / 39.00	540.37	540.40
CL Pier 10	793+79.32	-39.00 / 39.00	540.39	540.41
G	793+89.32	-39.00 / 39.00	540.40	540.43
H	793+99.32	-39.00 / 39.00	540.42	540.47
I	794+09.32	-39.00 / 39.00	540.44	540.51
J	794+19.32	-39.00 / 39.00	540.45	540.53
K	794+29.32	-39.00 / 39.00	540.47	540.55
L	794+39.32	-39.00 / 39.00	540.49	540.56
M	794+49.32	-39.00 / 39.00	540.50	540.55
N	794+59.32	-39.00 / 39.00	540.52	540.55
CL Pier 9	794+71.15	-39.00 / 39.00	540.53	540.55
O	794+81.15	-39.00 / 39.00	540.55	540.58
P	794+91.15	-39.00 / 39.00	540.56	540.61
Q	795+01.15	-39.00 / 39.00	540.58	540.65
R	795+11.15	-39.00 / 39.00	540.59	540.67
S	795+21.15	-39.00 / 39.00	540.60	540.68
T	795+31.15	-39.00 / 39.00	540.61	540.68
U	795+41.15	-39.00 / 39.00	540.63	540.69
V	795+51.15	-39.00 / 39.00	540.64	540.68
CL Pier 8	795+62.99	-39.00 / 39.00	540.65	540.67
W	795+72.99	-39.00 / 39.00	540.66	540.69
X	795+82.99	-39.00 / 39.00	540.67	540.71
Y	795+92.99	-39.00 / 39.00	540.68	540.74
Z	796+02.99	-39.00 / 39.00	540.69	540.75
AA	796+12.99	-39.00 / 39.00	540.70	540.76
BB	796+22.99	-39.00 / 39.00	540.71	540.76
CL Brg. Pier 7	796+34.74	-39.00 / 39.00	540.72	540.74
CL Exp. Jt. Pier 7	796+35.63	-39.00 / 39.00	540.72	540.74
CL Pier 7	796+35.99	-39.00 / 39.00	540.72	540.74

BEAM 3 & BEAM 18

Location	Station	Offset Beam 3/ Beam 18	Theoretical Grade Elevations	Theoretical Grade Elevations Adjusted For Dead Load Deflection and Grinding
Bk. S. Abut.	793+05.78	-33.00 / 33.00	540.35	540.37
CL Exp. Jt. S. Abut.	793+06.88	-33.00 / 33.00	540.35	540.37
CL Brg. S. Abut.	793+07.57	-33.00 / 33.00	540.35	540.37
A	793+17.57	-33.00 / 33.00	540.37	540.41
B	793+27.57	-33.00 / 33.00	540.39	540.45
C	793+37.57	-33.00 / 33.00	540.41	540.48
D	793+47.57	-33.00 / 33.00	540.43	540.49
E	793+57.57	-33.00 / 33.00	540.45	540.50
F	793+67.57	-33.00 / 33.00	540.47	540.50
CL Pier 10	793+79.32	-33.00 / 33.00	540.49	540.51
G	793+89.32	-33.00 / 33.00	540.51	540.54
H	793+99.32	-33.00 / 33.00	540.53	540.58
I	794+09.32	-33.00 / 33.00	540.54	540.61
J	794+19.32	-33.00 / 33.00	540.56	540.64
K	794+29.32	-33.00 / 33.00	540.58	540.66
L	794+39.32	-33.00 / 33.00	540.59	540.66
M	794+49.32	-33.00 / 33.00	540.61	540.66
N	794+59.32	-33.00 / 33.00	540.62	540.65
CL Pier 9	794+71.15	-33.00 / 33.00	540.64	540.66
O	794+81.15	-33.00 / 33.00	540.65	540.68
P	794+91.15	-33.00 / 33.00	540.67	540.72
Q	795+01.15	-33.00 / 33.00	540.68	540.75
R	795+11.15	-33.00 / 33.00	540.69	540.77
S	795+21.15	-33.00 / 33.00	540.71	540.79
T	795+31.15	-33.00 / 33.00	540.72	540.79
U	795+41.15	-33.00 / 33.00	540.73	540.79
V	795+51.15	-33.00 / 33.00	540.74	540.78
CL Pier 8	795+62.99	-33.00 / 33.00	540.76	540.78
W	795+72.99	-33.00 / 33.00	540.77	540.80
X	795+82.99	-33.00 / 33.00	540.78	540.82
Y	795+92.99	-33.00 / 33.00	540.79	540.85
Z	796+02.99	-33.00 / 33.00	540.80	540.86
AA	796+12.99	-33.00 / 33.00	540.81	540.87
BB	796+22.99	-33.00 / 33.00	540.82	540.87
CL Brg. Pier 7	796+34.74	-33.00 / 33.00	540.83	540.85
CL Exp. Jt. Pier 7	796+35.63	-33.00 / 33.00	540.83	540.85
CL Pier 7	796+35.99	-33.00 / 33.00	540.83	540.85

BEAM 4 & BEAM 17

Location	Station	Offset Beam 4/ Beam 17	Theoretical Grade Elevations	Theoretical Grade Elevations Adjusted For Dead Load Deflection and Grinding
Bk. S. Abut.	793+05.78	-27.00 / 27.00	540.44	540.46
CL Exp. Jt. S. Abut.	793+06.88	-27.00 / 27.00	540.44	540.46
CL Brg. S. Abut.	793+07.57	-27.00 / 27.00	540.44	540.46
A	793+17.57	-27.00 / 27.00	540.46	540.50
B	793+27.57	-27.00 / 27.00	540.48	540.54
C	793+37.57	-27.00 / 27.00	540.50	540.57
D	793+47.57	-27.00 / 27.00	540.52	540.58
E	793+57.57	-27.00 / 27.00	540.54	540.59
F	793+67.57	-27.00 / 27.00	540.56	540.59
CL Pier 10	793+79.32	-27.00 / 27.00	540.58	540.60
G	793+89.32	-27.00 / 27.00	540.60	540.63
H	793+99.32	-27.00 / 27.00	540.62	540.67
I	794+09.32	-27.00 / 27.00	540.63	540.70
J	794+19.32	-27.00 / 27.00	540.65	540.73
K	794+29.32	-27.00 / 27.00	540.67	540.75
L	794+39.32	-27.00 / 27.00	540.68	540.75
M	794+49.32	-27.00 / 27.00	540.70	540.75
N	794+59.32	-27.00 / 27.00	540.71	540.74
CL Pier 9	794+71.15	-27.00 / 27.00	540.73	540.75

BEAM 4 & BEAM 17 CONTINUED

Location	Station	Offset Beam 4/ Beam 17	Theoretical Grade Elevations	Theoretical Grade Elevations Adjusted For Dead Load Deflection and Grinding
O	794+81.15	-27.00 / 27.00	540.74	540.77
P	794+91.15	-27.00 / 27.00	540.76	540.81
Q	795+01.15	-27.00 / 27.00	540.77	540.84
R	795+11.15	-27.00 / 27.00	540.78	540.86
S	795+21.15	-27.00 / 27.00	540.80	540.88
T	795+31.15	-27.00 / 27.00	540.81	540.88
U	795+41.15	-27.00 / 27.00	540.82	540.88
V	795+51.15	-27.00 / 27.00	540.83	540.87
CL Pier 8	795+62.99	-27.00 / 27.00	540.85	540.87
W	795+72.99	-27.00 / 27.00	540.86	540.89
X	795+82.99	-27.00 / 27.00	540.87	540.91
Y	795+92.99	-27.00 / 27.00	540.88	540.94
Z	796+02.99	-27.00 / 27.00	540.89	540.95
AA	796+12.99	-27.00 / 27.00	540.90	540.96
BB	796+22.99	-27.00 / 27.00	540.91	540.96
CL Brg. Pier 7 - U1	796+34.74	-27.00 / 27.00	540.92	540.94
CL Exp. Jt. Pier 7	796+35.63	-27.00 / 27.00	540.92	540.94
CL Pier 7	796+35.99	-27.00 / 27.00	540.92	540.94

Note:
SB offsets are from SB PGL and NB offsets are from NB PGL.

BEAM 5 & BEAM 16

Location	Station	Offset Beam 5 / Beam 16	Theoretical Grade Elevations	Theoretical Grade Elevations Adjusted For Dead Load Deflection and Grinding
Bk. S. Abut.	793+05.78	-21.00 / 21.00	540.53	540.55
CL Exp. Jt. S. Abut.	793+06.88	-21.00 / 21.00	540.53	540.55
CL Brg. S. Abut.	793+07.57	-21.00 / 21.00	540.53	540.55
A	793+17.57	-21.00 / 21.00	540.55	540.59
B	793+27.57	-21.00 / 21.00	540.57	540.63
C	793+37.57	-21.00 / 21.00	540.59	540.66
D	793+47.57	-21.00 / 21.00	540.61	540.67
E	793+57.57	-21.00 / 21.00	540.63	540.68
F	793+67.57	-21.00 / 21.00	540.65	540.68
CL Pier 10	793+79.32	-21.00 / 21.00	540.67	540.69
G	793+89.32	-21.00 / 21.00	540.69	540.72
H	793+99.32	-21.00 / 21.00	540.71	540.76
I	794+09.32	-21.00 / 21.00	540.72	540.79
J	794+19.32	-21.00 / 21.00	540.74	540.82
K	794+29.32	-21.00 / 21.00	540.76	540.84
L	794+39.32	-21.00 / 21.00	540.77	540.84
M	794+49.32	-21.00 / 21.00	540.79	540.84
N	794+59.32	-21.00 / 21.00	540.80	540.83
CL Pier 9	794+71.15	-21.00 / 21.00	540.82	540.84
O	794+81.15	-21.00 / 21.00	540.83	540.86
P	794+91.15	-21.00 / 21.00	540.85	540.90
Q	795+01.15	-21.00 / 21.00	540.86	540.93
R	795+11.15	-21.00 / 21.00	540.87	540.95
S	795+21.15	-21.00 / 21.00	540.89	540.97
T	795+31.15	-21.00 / 21.00	540.90	540.97
U	795+41.15	-21.00 / 21.00	540.91	540.97
V	795+51.15	-21.00 / 21.00	540.92	540.96
CL Pier 8	795+62.99	-21.00 / 21.00	540.94	540.96
W	795+72.99	-21.00 / 21.00	540.95	540.98
X	795+82.99	-21.00 / 21.00	540.96	541.00
Y	795+92.99	-21.00 / 21.00	540.97	541.03
Z	796+02.99	-21.00 / 21.00	540.98	541.04
AA	796+12.99	-21.00 / 21.00	540.99	541.05
BB	796+22.99	-21.00 / 21.00	541.00	541.05
CL Brg. Pier 7	796+34.74	-21.00 / 21.00	541.01	541.03
CL Exp. Jt. Pier 7	796+35.63	-21.00 / 21.00	541.01	541.03
CL Pier 7	796+35.99	-21.00 / 21.00	541.01	541.03

STAGE CONSTRUCTION LINE (NB & SB)

Location	Station	Offset SB / NB	Theoretical Grade Elevations	Theoretical Grade Elevations Adjusted For Dead Load Deflection and Grinding
Bk. S. Abut.	793+05.78	-18.46 / 18.46	540.57	540.59
CL Exp. Jt. S. Abut.	793+06.88	-18.46 / 18.46	540.57	540.59
CL Brg. S. Abut.	793+07.57	-18.46 / 18.46	540.57	540.59
A	793+17.57	-18.46 / 18.46	540.59	540.63
B	793+27.57	-18.46 / 18.46	540.61	540.67
C	793+37.57	-18.46 / 18.46	540.63	540.70
D	793+47.57	-18.46 / 18.46	540.65	540.71
E	793+57.57	-18.46 / 18.46	540.67	540.72
F	793+67.57	-18.46 / 18.46	540.69	540.72
CL Pier 10	793+79.32	-18.46 / 18.46	540.71	540.73
G	793+89.32	-18.46 / 18.46	540.73	540.76
H	793+99.32	-18.46 / 18.46	540.74	540.79
I	794+09.32	-18.46 / 18.46	540.76	540.83
J	794+19.32	-18.46 / 18.46	540.78	540.86
K	794+29.32	-18.46 / 18.46	540.79	540.87
L	794+39.32	-18.46 / 18.46	540.81	540.88
M	794+49.32	-18.46 / 18.46	540.83	540.88
N	794+59.32	-18.46 / 18.46	540.84	540.87
CL Pier 9	794+71.15	-18.46 / 18.46	540.86	540.88
O	794+81.15	-18.46 / 18.46	540.87	540.90
P	794+91.15	-18.46 / 18.46	540.89	540.94
Q	795+01.15	-18.46 / 18.46	540.90	540.97
R	795+11.15	-18.46 / 18.46	540.91	540.99
S	795+21.15	-18.46 / 18.46	540.93	541.01
T	795+31.15	-18.46 / 18.46	540.94	541.01
U	795+41.15	-18.46 / 18.46	540.95	541.01
V	795+51.15	-18.46 / 18.46	540.96	541.00
CL Pier 8	795+62.99	-18.46 / 18.46	540.97	540.99
W	795+72.99	-18.46 / 18.46	540.99	541.02
X	795+82.99	-18.46 / 18.46	541.00	541.04
Y	795+92.99	-18.46 / 18.46	541.01	541.07
Z	796+02.99	-18.46 / 18.46	541.02	541.08
AA	796+12.99	-18.46 / 18.46	541.03	541.09
BB	796+22.99	-18.46 / 18.46	541.03	541.08
CL Brg. Pier 7	796+34.74	-18.46 / 18.46	541.04	541.06
CL Exp. Jt. Pier 7	796+35.63	-18.46 / 18.46	541.05	541.07
CL Pier 7	796+35.99	-18.46 / 18.46	541.05	541.07

BEAM 6 & BEAM 15

Location	Station	Offset Beam 6 / Beam 15	Theoretical Grade Elevations	Theoretical Grade Elevations Adjusted For Dead Load Deflection and Grinding
Bk. S. Abut.	793+05.78	-15.00 / 15.00	540.62	540.64
CL Exp. Jt. S. Abut.	793+06.88	-15.00 / 15.00	540.62	540.64
CL Brg. S. Abut.	793+07.57	-15.00 / 15.00	540.62	540.64
A	793+17.57	-15.00 / 15.00	540.64	540.68
B	793+27.57	-15.00 / 15.00	540.66	540.72
C	793+37.57	-15.00 / 15.00	540.68	540.75
D	793+47.57	-15.00 / 15.00	540.70	540.76
E	793+57.57	-15.00 / 15.00	540.72	540.77
F	793+67.57	-15.00 / 15.00	540.74	540.77
CL Pier 10	793+79.32	-15.00 / 15.00	540.76	540.78
G	793+89.32	-15.00 / 15.00	540.78	540.81
H	793+99.32	-15.00 / 15.00	540.80	540.85
I	794+09.32	-15.00 / 15.00	540.81	540.88
J	794+19.32	-15.00 / 15.00	540.83	540.91
K	794+29.32	-15.00 / 15.00	540.85	540.93
L	794+39.32	-15.00 / 15.00	540.86	540.93
M	794+49.32	-15.00 / 15.00	540.88	540.93
N	794+59.32	-15.00 / 15.00	540.89	540.92
CL Pier 9	794+71.15	-15.00 / 15.00	540.91	540.93
O	794+81.15	-15.00 / 15.00	540.92	540.95
P	794+91.15	-15.00 / 15.00	540.94	540.99
Q	795+01.15	-15.00 / 15.00	540.95	541.02
R	795+11.15	-15.00 / 15.00	540.96	541.04
S	795+21.15	-15.00 / 15.00	540.98	541.06
T	795+31.15	-15.00 / 15.00	540.99	541.06
U	795+41.15	-15.00 / 15.00	541.00	541.06
V	795+51.15	-15.00 / 15.00	541.01	541.05
CL Pier 8	795+62.99	-15.00 / 15.00	541.03	541.05
W	795+72.99	-15.00 / 15.00	541.04	541.07
X	795+82.99	-15.00 / 15.00	541.05	541.09
Y	795+92.99	-15.00 / 15.00	541.06	541.12
Z	796+02.99	-15.00 / 15.00	541.07	541.13
AA	796+12.99	-15.00 / 15.00	541.08	541.14
BB	796+22.99	-15.00 / 15.00	541.09	541.14
CL Brg. Pier 7	796+34.74	-15.00 / 15.00	541.10	541.12
CL Exp. Jt. Pier 7	796+35.63	-15.00 / 15.00	541.10	541.12
CL Pier 7	796+35.99	-15.00 / 15.00	541.10	541.12

Note:
SB offsets are from SB PGL and NB offsets are from NB PGL.

ROADWAY CROWN (SB & NB)

Location	Station	Offset SB / NB	Theoretical Grade Elevations	Theoretical Grade Elevations Adjusted For Dead Load Deflection and Grinding
Bk. S. Abut.	793+05.78	-12.00 / 12.00	540.67	540.69
CL Exp. Jt. S. Abut.	793+06.88	-12.00 / 12.00	540.67	540.69
CL Brg. S. Abut.	793+07.57	-12.00 / 12.00	540.67	540.69
A	793+17.57	-12.00 / 12.00	540.69	540.73
B	793+27.57	-12.00 / 12.00	540.71	540.77
C	793+37.57	-12.00 / 12.00	540.73	540.80
D	793+47.57	-12.00 / 12.00	540.75	540.81
E	793+57.57	-12.00 / 12.00	540.77	540.82
F	793+67.57	-12.00 / 12.00	540.79	540.82
CL Pier 10	793+79.32	-12.00 / 12.00	540.81	540.83
G	793+89.32	-12.00 / 12.00	540.82	540.85
H	793+99.32	-12.00 / 12.00	540.84	540.89
I	794+09.32	-12.00 / 12.00	540.86	540.93
J	794+19.32	-12.00 / 12.00	540.87	540.95
K	794+29.32	-12.00 / 12.00	540.89	540.97
L	794+39.32	-12.00 / 12.00	540.91	540.98
M	794+49.32	-12.00 / 12.00	540.92	540.97
N	794+59.32	-12.00 / 12.00	540.94	540.97
CL Pier 9	794+71.15	-12.00 / 12.00	540.95	540.97
O	794+81.15	-12.00 / 12.00	540.97	541.00
P	794+91.15	-12.00 / 12.00	540.98	541.03
Q	795+01.15	-12.00 / 12.00	541.00	541.07
R	795+11.15	-12.00 / 12.00	541.01	541.09
S	795+21.15	-12.00 / 12.00	541.02	541.10
T	795+31.15	-12.00 / 12.00	541.03	541.10
U	795+41.15	-12.00 / 12.00	541.05	541.11
V	795+51.15	-12.00 / 12.00	541.06	541.10
CL Pier 8	795+62.99	-12.00 / 12.00	541.07	541.09
W	795+72.99	-12.00 / 12.00	541.08	541.11
X	795+82.99	-12.00 / 12.00	541.09	541.13
Y	795+92.99	-12.00 / 12.00	541.10	541.16
Z	796+02.99	-12.00 / 12.00	541.11	541.17
AA	796+12.99	-12.00 / 12.00	541.12	541.18
BB	796+22.99	-12.00 / 12.00	541.13	541.18
CL Brg. Pier 7	796+34.74	-12.00 / 12.00	541.14	541.16
CL Exp. Jt. Pier 7	796+35.63	-12.00 / 12.00	541.14	541.16
CL Pier 7	796+35.99	-12.00 / 12.00	541.14	541.16

BEAM 7 & BEAM 14

Location	Station	Offset Beam 7 / Beam 14	Theoretical Grade Elevations	Theoretical Grade Elevations Adjusted For Dead Load Deflection and Grinding
Bk. S. Abut.	793+05.78	-9.00 / 9.00	540.62	540.64
CL Exp. Jt. S. Abut.	793+06.88	-9.00 / 9.00	540.62	540.64
CL Brg. S. Abut.	793+07.57	-9.00 / 9.00	540.62	540.64
A	793+17.57	-9.00 / 9.00	540.64	540.68
B	793+27.57	-9.00 / 9.00	540.66	540.72
C	793+37.57	-9.00 / 9.00	540.68	540.75
D	793+47.57	-9.00 / 9.00	540.70	540.76
E	793+57.57	-9.00 / 9.00	540.72	540.77
F	793+67.57	-9.00 / 9.00	540.74	540.77
CL Pier 10	793+79.32	-9.00 / 9.00	540.76	540.78
G	793+89.32	-9.00 / 9.00	540.78	540.81
H	793+99.32	-9.00 / 9.00	540.80	540.85
I	794+09.32	-9.00 / 9.00	540.81	540.88
J	794+19.32	-9.00 / 9.00	540.83	540.91
K	794+29.32	-9.00 / 9.00	540.85	540.93
L	794+39.32	-9.00 / 9.00	540.86	540.93
M	794+49.32	-9.00 / 9.00	540.88	540.93
N	794+59.32	-9.00 / 9.00	540.89	540.92
CL Pier 9	794+71.15	-9.00 / 9.00	540.91	540.93
O	794+81.15	-9.00 / 9.00	540.92	540.95
P	794+91.15	-9.00 / 9.00	540.94	540.99
Q	795+01.15	-9.00 / 9.00	540.95	541.02
R	795+11.15	-9.00 / 9.00	540.96	541.04
S	795+21.15	-9.00 / 9.00	540.98	541.06
T	795+31.15	-9.00 / 9.00	540.99	541.06
U	795+41.15	-9.00 / 9.00	541.00	541.06
V	795+51.15	-9.00 / 9.00	541.01	541.05
CL Pier 8	795+62.99	-9.00 / 9.00	541.03	541.05
W	795+72.99	-9.00 / 9.00	541.04	541.07
X	795+82.99	-9.00 / 9.00	541.05	541.09
Y	795+92.99	-9.00 / 9.00	541.06	541.12
Z	796+02.99	-9.00 / 9.00	541.07	541.13
AA	796+12.99	-9.00 / 9.00	541.08	541.14
BB	796+22.99	-9.00 / 9.00	541.09	541.14
CL Brg. Pier 7	796+34.74	-9.00 / 9.00	541.10	541.12
CL Exp. Jt. Pier 7	796+35.63	-9.00 / 9.00	541.10	541.12
CL Pier 7	796+35.99	-9.00 / 9.00	541.10	541.12

BEAM 8 & BEAM 13

Location	Station	Offset Beam 8 / Beam 13	Theoretical Grade Elevations	Theoretical Grade Elevations Adjusted For Dead Load Deflection and Grinding
Bk. S. Abut.	793+05.78	-3.00 / 3.00	540.53	540.55
CL Exp. Jt. S. Abut.	793+06.88	-3.00 / 3.00	540.53	540.55
CL Brg. S. Abut.	793+07.57	-3.00 / 3.00	540.53	540.55
A	793+17.57	-3.00 / 3.00	540.55	540.59
B	793+27.57	-3.00 / 3.00	540.57	540.63
C	793+37.57	-3.00 / 3.00	540.59	540.66
D	793+47.57	-3.00 / 3.00	540.61	540.67
E	793+57.57	-3.00 / 3.00	540.63	540.68
F	793+67.57	-3.00 / 3.00	540.65	540.68
CL Pier 10	793+79.32	-3.00 / 3.00	540.67	540.69
G	793+89.32	-3.00 / 3.00	540.69	540.72
H	793+99.32	-3.00 / 3.00	540.71	540.76
I	794+09.32	-3.00 / 3.00	540.72	540.79
J	794+19.32	-3.00 / 3.00	540.74	540.82
K	794+29.32	-3.00 / 3.00	540.76	540.84
L	794+39.32	-3.00 / 3.00	540.77	540.84
M	794+49.32	-3.00 / 3.00	540.79	540.84
N	794+59.32	-3.00 / 3.00	540.80	540.83
CL Pier 9	794+71.15	-3.00 / 3.00	540.82	540.84
O	794+81.15	-3.00 / 3.00	540.83	540.86
P	794+91.15	-3.00 / 3.00	540.85	540.90
Q	795+01.15	-3.00 / 3.00	540.86	540.93
R	795+11.15	-3.00 / 3.00	540.87	540.95
S	795+21.15	-3.00 / 3.00	540.89	540.97
T	795+31.15	-3.00 / 3.00	540.90	540.97
U	795+41.15	-3.00 / 3.00	540.91	540.97
V	795+51.15	-3.00 / 3.00	540.92	540.96
CL Pier 8	795+62.99	-3.00 / 3.00	540.94	540.96
W	795+72.99	-3.00 / 3.00	540.95	540.98
X	795+82.99	-3.00 / 3.00	540.96	541.00
Y	795+92.99	-3.00 / 3.00	540.97	541.03
Z	796+02.99	-3.00 / 3.00	540.98	541.04
AA	796+12.99	-3.00 / 3.00	540.99	541.05
BB	796+22.99	-3.00 / 3.00	541.00	541.05
CL Brg. Pier 7	796+34.74	-3.00 / 3.00	541.01	541.03
CL Exp. Jt. Pier 7	796+35.63	-3.00 / 3.00	541.01	541.03
CL Pier 7	796+35.99	-3.00 / 3.00	541.01	541.03

Note:
SB offsets are from SB PGL and NB offsets are from NB PGL.

CMT
License No. 184-000613

USER NAME = bholland	DESIGNED - MAC	REVISED -	
	DRAWN - VT	REVISED -	
PLOT SCALE = N/A	CHECKED - DH	REVISED -	
PLOT DATE = 3/21/2024	DATE - MARCH 2024	REVISED -	

STATE OF ILLINOIS
DEPARTMENT OF TRANSPORTATION

DECK ELEVATIONS - IV
STRUCTURE NO. 084-0018 (NB) & 084-0019 (SB)

SCALE: | SHEET 9 OF 67 SHEETS | STA. | TO STA.

F.A.I. RTE.	SECTION	COUNTY	TOTAL SHEETS	SHEET NO.
55	(84-2BR-1)D,BY,BP,BRR	SANGAMON	139	51
		CONTRACT NO. 72K98		
	ILLINOIS	FED. AID PROJECT		

SB PGL & NB PGL

Location	Station	Offset	Theoretical Grade Elevations	Theoretical Grade Elevations Adjusted For Dead Load Deflection and Grinding
Bk. S. Abut.	793+05.78	0.00	540.49	540.51
CL Exp. Jt. S. Abut.	793+06.88	0.00	540.49	540.51
CL Brg. S. Abut.	793+07.57	0.00	540.49	540.51
A	793+17.57	0.00	540.51	540.55
B	793+27.57	0.00	540.53	540.59
C	793+37.57	0.00	540.55	540.62
D	793+47.57	0.00	540.57	540.63
E	793+57.57	0.00	540.59	540.64
F	793+67.57	0.00	540.61	540.64
CL Pier 10	793+79.32	0.00	540.63	540.65
G	793+89.32	0.00	540.64	540.67
H	793+99.32	0.00	540.66	540.71
I	794+09.32	0.00	540.68	540.75
J	794+19.32	0.00	540.69	540.77
K	794+29.32	0.00	540.71	540.79
L	794+39.32	0.00	540.73	540.80
M	794+49.32	0.00	540.74	540.79
N	794+59.32	0.00	540.76	540.79
CL Pier 9	794+71.15	0.00	540.77	540.79
O	794+81.15	0.00	540.79	540.82
P	794+91.15	0.00	540.80	540.85
Q	795+01.15	0.00	540.82	540.89
R	795+11.15	0.00	540.83	540.91
S	795+21.15	0.00	540.84	540.92
T	795+31.15	0.00	540.85	540.92
U	795+41.15	0.00	540.87	540.93
V	795+51.15	0.00	540.88	540.92
CL Pier 8	795+62.99	0.00	540.89	540.91
W	795+72.99	0.00	540.90	540.93
X	795+82.99	0.00	540.91	540.95
Y	795+92.99	0.00	540.92	540.98
Z	796+02.99	0.00	540.93	540.99
AA	796+12.99	0.00	540.94	541.00
BB	796+22.99	0.00	540.95	541.00
CL Brg. Pier 7	796+34.74	0.00	540.96	540.98
CL Exp. Jt. Pier 7	796+35.63	0.00	540.96	540.98
CL Pier 7	796+35.99	0.00	540.96	540.98

BEAM 9 & BEAM 12

Location	Station	Offset Beam 9 / Beam 12	Theoretical Grade Elevations	Theoretical Grade Elevations Adjusted For Dead Load Deflection and Grinding
Bk. S. Abut.	793+05.78	2.50 / -2.50	540.44	540.46
CL Exp. Jt. S. Abut.	793+06.88	2.50 / -2.50	540.44	540.46
CL Brg. S. Abut.	793+07.57	2.50 / -2.50	540.44	540.46
A	793+17.57	2.50 / -2.50	540.46	540.50
B	793+27.57	2.50 / -2.50	540.48	540.54
C	793+37.57	2.50 / -2.50	540.50	540.57
D	793+47.57	2.50 / -2.50	540.52	540.58
E	793+57.57	2.50 / -2.50	540.54	540.59
F	793+67.57	2.50 / -2.50	540.56	540.59
CL Pier 10	793+79.32	2.50 / -2.50	540.58	540.60
G	793+89.32	2.50 / -2.50	540.59	540.62
H	793+99.32	2.50 / -2.50	540.61	540.66
I	794+09.32	2.50 / -2.50	540.63	540.70
J	794+19.32	2.50 / -2.50	540.64	540.72
K	794+29.32	2.50 / -2.50	540.66	540.74
L	794+39.32	2.50 / -2.50	540.68	540.75
M	794+49.32	2.50 / -2.50	540.69	540.74
N	794+59.32	2.50 / -2.50	540.71	540.74
CL Pier 9	794+71.15	2.50 / -2.50	540.72	540.74
O	794+81.15	2.50 / -2.50	540.74	540.77
P	794+91.15	2.50 / -2.50	540.75	540.80
Q	795+01.15	2.50 / -2.50	540.77	540.84
R	795+11.15	2.50 / -2.50	540.78	540.86
S	795+21.15	2.50 / -2.50	540.79	540.87
T	795+31.15	2.50 / -2.50	540.80	540.87
U	795+41.15	2.50 / -2.50	540.82	540.88
V	795+51.15	2.50 / -2.50	540.83	540.87
CL Pier 8	795+62.99	2.50 / -2.50	540.84	540.86
W	795+72.99	2.50 / -2.50	540.85	540.88
X	795+82.99	2.50 / -2.50	540.86	540.90
Y	795+92.99	2.50 / -2.50	540.87	540.93
Z	796+02.99	2.50 / -2.50	540.88	540.94
AA	796+12.99	2.50 / -2.50	540.89	540.95
BB	796+22.99	2.50 / -2.50	540.90	540.95
CL Brg. Pier 7	796+34.74	2.50 / -2.50	540.91	540.93
CL Exp. Jt. Pier 7	796+35.63	2.50 / -2.50	540.91	540.93
CL Pier 7	796+35.99	2.50 / -2.50	540.91	540.93

BEAM 10 & BEAM 11

Location	Station	Offset Beam 10 / Beam 11	Theoretical Grade Elevations	Theoretical Grade Elevations Adjusted For Dead Load Deflection and Grinding
Bk. S. Abut.	793+05.78	8.00 / -8.00	540.33	540.35
CL Exp. Jt. S. Abut.	793+06.88	8.00 / -8.00	540.33	540.35
CL Brg. S. Abut.	793+07.57	8.00 / -8.00	540.33	540.35
A	793+17.57	8.00 / -8.00	540.35	540.39
B	793+27.57	8.00 / -8.00	540.37	540.43
C	793+37.57	8.00 / -8.00	540.39	540.46
D	793+47.57	8.00 / -8.00	540.41	540.47
E	793+57.57	8.00 / -8.00	540.43	540.48
F	793+67.57	8.00 / -8.00	540.45	540.48
CL Pier 10	793+79.32	8.00 / -8.00	540.47	540.49
G	793+89.32	8.00 / -8.00	540.48	540.51
H	793+99.32	8.00 / -8.00	540.50	540.55
I	794+09.32	8.00 / -8.00	540.52	540.59
J	794+19.32	8.00 / -8.00	540.53	540.61
K	794+29.32	8.00 / -8.00	540.55	540.63
L	794+39.32	8.00 / -8.00	540.57	540.64
M	794+49.32	8.00 / -8.00	540.58	540.63
N	794+59.32	8.00 / -8.00	540.60	540.63
CL Pier 9	794+71.15	8.00 / -8.00	540.61	540.63
O	794+81.15	8.00 / -8.00	540.63	540.66
P	794+91.15	8.00 / -8.00	540.64	540.69
Q	795+01.15	8.00 / -8.00	540.66	540.73
R	795+11.15	8.00 / -8.00	540.67	540.75
S	795+21.15	8.00 / -8.00	540.68	540.76
T	795+31.15	8.00 / -8.00	540.69	540.76
U	795+41.15	8.00 / -8.00	540.71	540.77
V	795+51.15	8.00 / -8.00	540.72	540.76
CL Pier 8	795+62.99	8.00 / -8.00	540.73	540.75
W	795+72.99	8.00 / -8.00	540.74	540.77
X	795+82.99	8.00 / -8.00	540.75	540.79
Y	795+92.99	8.00 / -8.00	540.76	540.82
Z	796+02.99	8.00 / -8.00	540.77	540.83
AA	796+12.99	8.00 / -8.00	540.78	540.84
BB	796+22.99	8.00 / -8.00	540.79	540.84
CL Brg. Pier 7	796+34.74	8.00 / -8.00	540.80	540.82
CL Exp. Jt. Pier 7	796+35.63	8.00 / -8.00	540.80	540.82
CL Pier 7	796+35.99	8.00 / -8.00	540.80	540.82

Note:
SB offsets are from SB PGL and NB offsets are from NB PGL.

CMT
License No. 184-000613 © Copyright CMT, Inc.

USER NAME = bholland	DESIGNED - MAC	REVISED -	
	DRAWN - VT	REVISED -	
PLOT SCALE = N/A	CHECKED - DH	REVISED -	
PLOT DATE = 3/21/2024	DATE - MARCH 2024	REVISED -	

STATE OF ILLINOIS
DEPARTMENT OF TRANSPORTATION

DECK ELEVATIONS - V
STRUCTURE NO. 084-0018 (NB) & 084-0019 (SB)

SCALE: | SHEET 10 OF 67 SHEETS | STA. | TO STA.

F.A.I. RTE.	SECTION	COUNTY	TOTAL SHEETS	SHEET NO.
55	(84-2BR-1)D,BY,BP,BRR	SANGAMON	139	52
		CONTRACT NO. 72K98		
		ILLINOIS	FED. AID PROJECT	

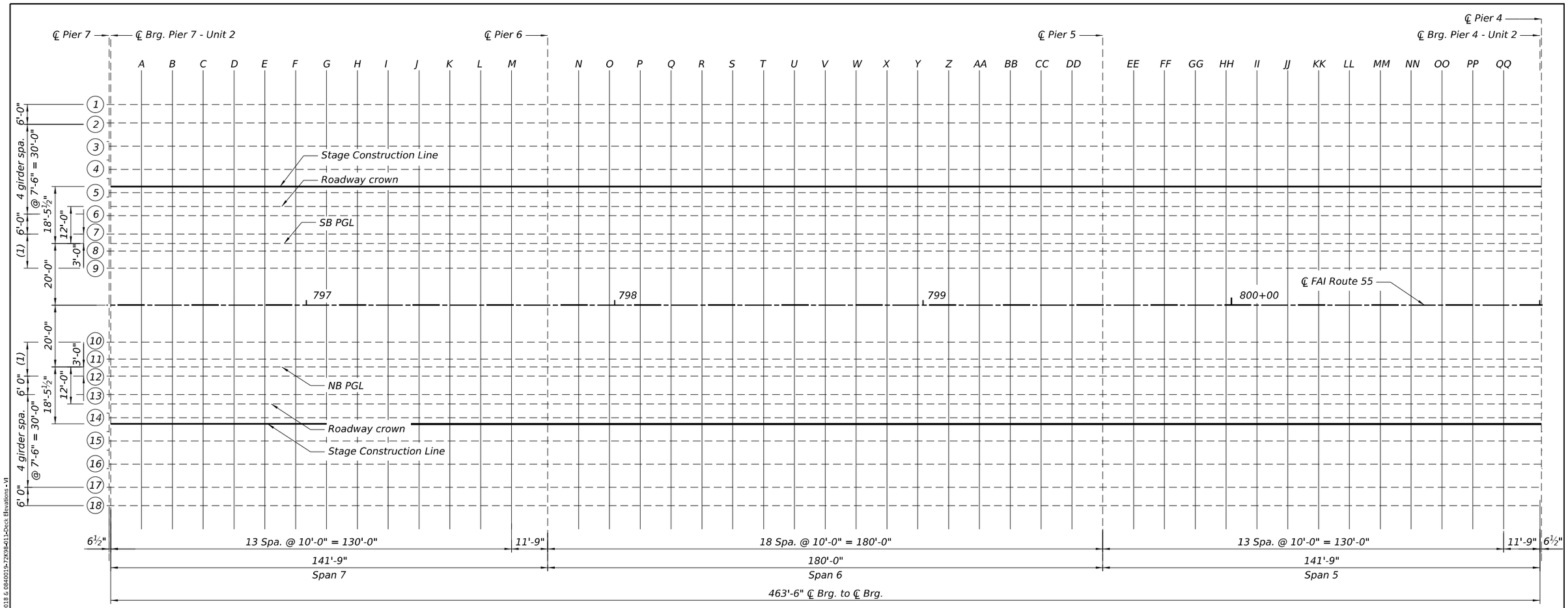

DECK ELEVATION LAYOUT - UNIT 2

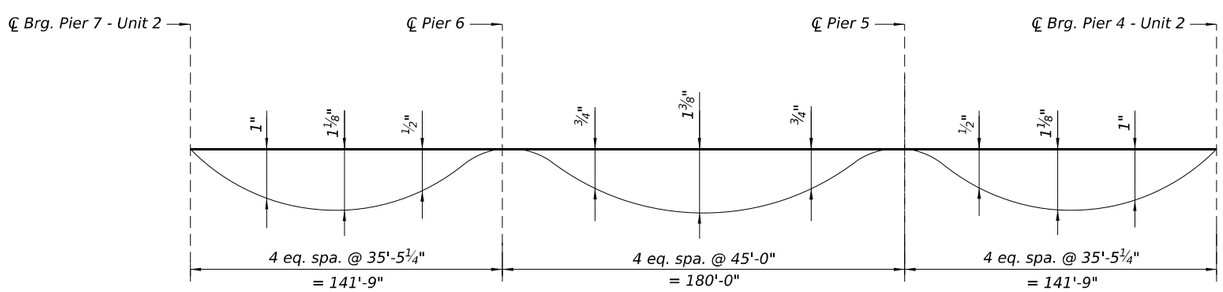

DEAD LOAD DEFLECTION DIAGRAM

(For new girders only.)
(Includes weight of concrete only.)

Note:
The above deflections are not to be used in the field if the engineer is working from the grade elevations adjusted for dead load deflections as shown on sheets 12 through 15 of 67.

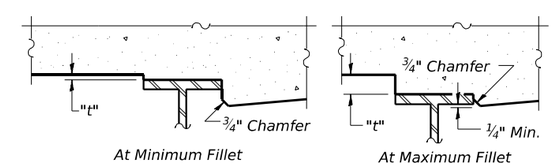

After all structural steel has been erected, elevations of the top flanges of the girders shall be taken at intervals shown on this sheet. These elevations subtracted from the "Theoretical Grade Elevations Adjusted for Dead Load Deflection" shown on sheets 12 thru 15 of 67, minus slab thickness, equals the fillet heights "t" above top flange of girders.

FILLET HEIGHTS

FILE NAME: pw://cmtengi-pw.bentley.com:cmt-connect-projects/Documents:IDOT/21094103-00/410300:Bridge/Sangamon River Bridges/CADD_Sheets/0840018 & 0840019-72K98-011-Deck Elevations - VI

CMT
License No. 184-000613
© Copyright CMT, Inc.

USER NAME = bholland	DESIGNED - MAC	REVISED -	
	DRAWN - VT	REVISED -	
PLOT SCALE = N/A	CHECKED - DH	REVISED -	
PLOT DATE = 3/21/2024	DATE - MARCH 2024	REVISED -	

STATE OF ILLINOIS
DEPARTMENT OF TRANSPORTATION

DECK ELEVATIONS - VI
STRUCTURE NO. 084-0018 (NB) & 084-0019 (SB)

SCALE: | SHEET 11 OF 67 SHEETS | STA. | TO STA.

F.A.I. RTE.	SECTION	COUNTY	TOTAL SHEETS	SHEET NO.
55	(84-2BR-1)D,BY,BP,BRR	SANGAMON	139	53
		CONTRACT NO. 72K98		
		ILLINOIS	FED. AID PROJECT	

GIRDER 1 & GIRDER 18

Location	Station	Offset Girder 1 / Girder 18	Theoretical Grade Elevations	Theoretical Grade Elevations Adjusted For Dead Load Deflection and Grinding
CL Pier 7	796+35.99	-45.00 / 45.00	540.60	540.62
CL Brg. Pier 7	796+36.53	-45.00 / 45.00	540.60	540.62
A	796+46.53	-45.00 / 45.00	540.61	540.65
B	796+56.53	-45.00 / 45.00	540.62	540.68
C	796+66.53	-45.00 / 45.00	540.63	540.70
D	796+76.53	-45.00 / 45.00	540.63	540.71
E	796+86.53	-45.00 / 45.00	540.64	540.73
F	796+96.53	-45.00 / 45.00	540.65	540.74
G	797+06.53	-45.00 / 45.00	540.65	540.74
H	797+16.53	-45.00 / 45.00	540.66	540.74
I	797+26.53	-45.00 / 45.00	540.66	540.73
J	797+36.53	-45.00 / 45.00	540.67	540.73
K	797+46.53	-45.00 / 45.00	540.67	540.71
L	797+56.53	-45.00 / 45.00	540.68	540.71
M	797+66.53	-45.00 / 45.00	540.68	540.71
CL Pier 6	797+78.28	-45.00 / 45.00	540.69	540.71
N	797+88.28	-45.00 / 45.00	540.69	540.72
O	797+98.28	-45.00 / 45.00	540.69	540.72
P	798+08.28	-45.00 / 45.00	540.69	540.73
Q	798+18.28	-45.00 / 45.00	540.70	540.75
R	798+28.28	-45.00 / 45.00	540.70	540.77
S	798+38.28	-45.00 / 45.00	540.70	540.78
T	798+48.28	-45.00 / 45.00	540.70	540.79
U	798+58.28	-45.00 / 45.00	540.70	540.79
V	798+68.28	-45.00 / 45.00	540.70	540.80
W	798+78.28	-45.00 / 45.00	540.70	540.79
X	798+88.28	-45.00 / 45.00	540.70	540.79
Y	798+98.28	-45.00 / 45.00	540.70	540.78
Z	799+08.28	-45.00 / 45.00	540.70	540.77
AA	799+18.28	-45.00 / 45.00	540.69	540.74
BB	799+28.28	-45.00 / 45.00	540.69	540.73
CC	799+38.28	-45.00 / 45.00	540.69	540.72
DD	799+48.28	-45.00 / 45.00	540.69	540.72
CL Pier 5	799+58.28	-45.00 / 45.00	540.68	540.70
EE	799+68.28	-45.00 / 45.00	540.68	540.70
FF	799+78.28	-45.00 / 45.00	540.68	540.71
GG	799+88.28	-45.00 / 45.00	540.67	540.71
HH	799+98.28	-45.00 / 45.00	540.67	540.72
II	800+08.28	-45.00 / 45.00	540.66	540.73
JJ	800+18.28	-45.00 / 45.00	540.66	540.74
KK	800+28.28	-45.00 / 45.00	540.65	540.74
LL	800+38.28	-45.00 / 45.00	540.64	540.73
MM	800+48.28	-45.00 / 45.00	540.64	540.73
NN	800+58.28	-45.00 / 45.00	540.63	540.72
OO	800+68.28	-45.00 / 45.00	540.62	540.69
PP	800+78.28	-45.00 / 45.00	540.62	540.68
QQ	800+88.28	-45.00 / 45.00	540.61	540.65
CL Brg. Pier 4	801+00.03	-45.00 / 45.00	540.60	540.62
CL Pier 4	801+00.57	-45.00 / 45.00	540.60	540.62

GIRDER 2 & GIRDER 17

Location	Station	Offset Girder 2 / Girder 17	Theoretical Grade Elevations	Theoretical Grade Elevations Adjusted For Dead Load Deflection and Grinding
CL Pier 7	796+35.99	-39.00 / 39.00	540.72	540.74
CL Brg. Pier 7	796+36.53	-39.00 / 39.00	540.72	540.74
A	796+46.53	-39.00 / 39.00	540.73	540.77
B	796+56.53	-39.00 / 39.00	540.74	540.79
C	796+66.53	-39.00 / 39.00	540.75	540.82
D	796+76.53	-39.00 / 39.00	540.75	540.83
E	796+86.53	-39.00 / 39.00	540.76	540.84
F	796+96.53	-39.00 / 39.00	540.77	540.85
G	797+06.53	-39.00 / 39.00	540.77	540.85
H	797+16.53	-39.00 / 39.00	540.78	540.86
I	797+26.53	-39.00 / 39.00	540.78	540.85
J	797+36.53	-39.00 / 39.00	540.79	540.84
K	797+46.53	-39.00 / 39.00	540.79	540.83
L	797+56.53	-39.00 / 39.00	540.80	540.83
M	797+66.53	-39.00 / 39.00	540.80	540.82
CL Pier 6	797+78.28	-39.00 / 39.00	540.81	540.83
N	797+88.28	-39.00 / 39.00	540.81	540.84
O	797+98.28	-39.00 / 39.00	540.81	540.85
P	798+08.28	-39.00 / 39.00	540.81	540.86
Q	798+18.28	-39.00 / 39.00	540.82	540.89
R	798+28.28	-39.00 / 39.00	540.82	540.90
S	798+38.28	-39.00 / 39.00	540.82	540.91
T	798+48.28	-39.00 / 39.00	540.82	540.93
U	798+58.28	-39.00 / 39.00	540.82	540.93
V	798+68.28	-39.00 / 39.00	540.82	540.93
W	798+78.28	-39.00 / 39.00	540.82	540.93
X	798+88.28	-39.00 / 39.00	540.82	540.93
Y	798+98.28	-39.00 / 39.00	540.82	540.92
Z	799+08.28	-39.00 / 39.00	540.82	540.90
AA	799+18.28	-39.00 / 39.00	540.81	540.88
BB	799+28.28	-39.00 / 39.00	540.81	540.86
CC	799+38.28	-39.00 / 39.00	540.81	540.85
DD	799+48.28	-39.00 / 39.00	540.81	540.84
CL Pier 5	799+58.28	-39.00 / 39.00	540.80	540.82
EE	799+68.28	-39.00 / 39.00	540.80	540.82
FF	799+78.28	-39.00 / 39.00	540.80	540.83
GG	799+88.28	-39.00 / 39.00	540.79	540.83
HH	799+98.28	-39.00 / 39.00	540.79	540.84
II	800+08.28	-39.00 / 39.00	540.78	540.84
JJ	800+18.28	-39.00 / 39.00	540.78	540.85
KK	800+28.28	-39.00 / 39.00	540.77	540.85
LL	800+38.28	-39.00 / 39.00	540.76	540.84
MM	800+48.28	-39.00 / 39.00	540.76	540.84
NN	800+58.28	-39.00 / 39.00	540.75	540.83
OO	800+68.28	-39.00 / 39.00	540.74	540.81
PP	800+78.28	-39.00 / 39.00	540.74	540.80
QQ	800+88.28	-39.00 / 39.00	540.73	540.77
CL Brg. Pier 4	801+00.03	-39.00 / 39.00	540.72	540.74
CL Pier 4	801+00.57	-39.00 / 39.00	540.72	540.74

GIRDER 3 & GIRDER 16

Location	Station	Offset Girder 3 / Girder 16	Theoretical Grade Elevations	Theoretical Grade Elevations Adjusted For Dead Load Deflection and Grinding
CL Pier 7	796+35.99	-31.50 / 31.50	540.85	540.87
CL Brg. Pier 7	796+36.53	-31.50 / 31.50	540.85	540.87
A	796+46.53	-31.50 / 31.50	540.86	540.90
B	796+56.53	-31.50 / 31.50	540.87	540.93
C	796+66.53	-31.50 / 31.50	540.87	540.94
D	796+76.53	-31.50 / 31.50	540.88	540.96
E	796+86.53	-31.50 / 31.50	540.89	540.98
F	796+96.53	-31.50 / 31.50	540.89	540.98
G	797+06.53	-31.50 / 31.50	540.90	540.99
H	797+16.53	-31.50 / 31.50	540.91	540.99
I	797+26.53	-31.50 / 31.50	540.91	540.98
J	797+36.53	-31.50 / 31.50	540.92	540.98
K	797+46.53	-31.50 / 31.50	540.92	540.97
L	797+56.53	-31.50 / 31.50	540.92	540.95
M	797+66.53	-31.50 / 31.50	540.93	540.95
CL Pier 6	797+78.28	-31.50 / 31.50	540.93	540.95
N	797+88.28	-31.50 / 31.50	540.94	540.97
O	797+98.28	-31.50 / 31.50	540.94	540.98
P	798+08.28	-31.50 / 31.50	540.94	541.00
Q	798+18.28	-31.50 / 31.50	540.94	541.01
R	798+28.28	-31.50 / 31.50	540.94	541.03
S	798+38.28	-31.50 / 31.50	540.95	541.05
T	798+48.28	-31.50 / 31.50	540.95	541.07
U	798+58.28	-31.50 / 31.50	540.95	541.07
V	798+68.28	-31.50 / 31.50	540.95	541.08
W	798+78.28	-31.50 / 31.50	540.95	541.07
X	798+88.28	-31.50 / 31.50	540.95	541.07
Y	798+98.28	-31.50 / 31.50	540.94	541.04
Z	799+08.28	-31.50 / 31.50	540.94	541.03
AA	799+18.28	-31.50 / 31.50	540.94	541.01
BB	799+28.28	-31.50 / 31.50	540.94	541.00
CC	799+38.28	-31.50 / 31.50	540.94	540.98
DD	799+48.28	-31.50 / 31.50	540.93	540.96
CL Pier 5	799+58.28	-31.50 / 31.50	540.93	540.95
EE	799+68.28	-31.50 / 31.50	540.93	540.95
FF	799+78.28	-31.50 / 31.50	540.92	540.95
GG	799+88.28	-31.50 / 31.50	540.92	540.96
HH	799+98.28	-31.50 / 31.50	540.91	540.97
II	800+08.28	-31.50 / 31.50	540.91	540.98
JJ	800+18.28	-31.50 / 31.50	540.90	540.98
KK	800+28.28	-31.50 / 31.50	540.90	540.99
LL	800+38.28	-31.50 / 31.50	540.89	540.98
MM	800+48.28	-31.50 / 31.50	540.89	540.98
NN	800+58.28	-31.50 / 31.50	540.88	540.97
OO	800+68.28	-31.50 / 31.50	540.87	540.94
PP	800+78.28	-31.50 / 31.50	540.86	540.92
QQ	800+88.28	-31.50 / 31.50	540.86	540.90
CL Brg. Pier 4	801+00.03	-31.50 / 31.50	540.85	540.87
CL Pier 4	801+00.57	-31.50 / 31.50	540.85	540.87

Note:
SB offsets are from SB PGL and NB offsets are from NB PGL.

CMT
License No. 184-000613 © Copyright CMT, Inc.

USER NAME = bholland	DESIGNED - MAC	REVISED -	
	DRAWN - VT	REVISED -	
PLOT SCALE = N/A	CHECKED - DH	REVISED -	
PLOT DATE = 3/21/2024	DATE - MARCH 2024	REVISED -	

STATE OF ILLINOIS
DEPARTMENT OF TRANSPORTATION

DECK ELEVATIONS - VII
STRUCTURE NO. 084-0018 (NB) & 084-0019 (SB)

SCALE: SHEET 12 OF 67 SHEETS STA. TO STA.

F.A.I. RTE.	SECTION	COUNTY	TOTAL SHEETS	SHEET NO.
55	(84-2BR-1)D,BY,BP,BRR	SANGAMON	139	54
		CONTRACT NO. 72K98		
	ILLINOIS	FED. AID PROJECT		

GIRDER 4 & GIRDER 15

Location	Station	Offset Girder 4 / Girder 15	Theoretical Grade Elevations	Theoretical Grade Elevations Adjusted For Dead Load Deflection and Grinding
CL Pier 7	796+35.99	-24.00 / 24.00	540.96	540.98
CL Brg. Pier 7	796+36.53	-24.00 / 24.00	540.96	540.98
A	796+46.53	-24.00 / 24.00	540.97	541.01
B	796+56.53	-24.00 / 24.00	540.98	541.04
C	796+66.53	-24.00 / 24.00	540.99	541.06
D	796+76.53	-24.00 / 24.00	540.99	541.07
E	796+86.53	-24.00 / 24.00	541.00	541.09
F	796+96.53	-24.00 / 24.00	541.01	541.10
G	797+06.53	-24.00 / 24.00	541.01	541.10
H	797+16.53	-24.00 / 24.00	541.02	541.10
I	797+26.53	-24.00 / 24.00	541.02	541.09
J	797+36.53	-24.00 / 24.00	541.03	541.09
K	797+46.53	-24.00 / 24.00	541.03	541.08
L	797+56.53	-24.00 / 24.00	541.04	541.07
M	797+66.53	-24.00 / 24.00	541.04	541.06
CL Pier 6	797+78.28	-24.00 / 24.00	541.05	541.07
N	797+88.28	-24.00 / 24.00	541.05	541.08
O	797+98.28	-24.00 / 24.00	541.05	541.09
P	798+08.28	-24.00 / 24.00	541.05	541.11
Q	798+18.28	-24.00 / 24.00	541.06	541.13
R	798+28.28	-24.00 / 24.00	541.06	541.15
S	798+38.28	-24.00 / 24.00	541.06	541.16
T	798+48.28	-24.00 / 24.00	541.06	541.18
U	798+58.28	-24.00 / 24.00	541.06	541.18
V	798+68.28	-24.00 / 24.00	541.06	541.19
W	798+78.28	-24.00 / 24.00	541.06	541.18
X	798+88.28	-24.00 / 24.00	541.06	541.18
Y	798+98.28	-24.00 / 24.00	541.06	541.16
Z	799+08.28	-24.00 / 24.00	541.06	541.15
AA	799+18.28	-24.00 / 24.00	541.05	541.12
BB	799+28.28	-24.00 / 24.00	541.05	541.11
CC	799+38.28	-24.00 / 24.00	541.05	541.09
DD	799+48.28	-24.00 / 24.00	541.05	541.08
CL Pier 5	799+58.28	-24.00 / 24.00	541.04	541.06
EE	799+68.28	-24.00 / 24.00	541.04	541.06
FF	799+78.28	-24.00 / 24.00	541.04	541.07
GG	799+88.28	-24.00 / 24.00	541.03	541.07
HH	799+98.28	-24.00 / 24.00	541.03	541.09
II	800+08.28	-24.00 / 24.00	541.02	541.09
JJ	800+18.28	-24.00 / 24.00	541.02	541.10
KK	800+28.28	-24.00 / 24.00	541.01	541.10
LL	800+38.28	-24.00 / 24.00	541.00	541.09
MM	800+48.28	-24.00 / 24.00	541.00	541.09
NN	800+58.28	-24.00 / 24.00	540.99	541.08
OO	800+68.28	-24.00 / 24.00	540.98	541.05
PP	800+78.28	-24.00 / 24.00	540.98	541.04
QQ	800+88.28	-24.00 / 24.00	540.97	541.01
CL Brg. Pier 4	801+00.03	-24.00 / 24.00	540.96	540.98
CL Pier 4	801+00.57	-24.00 / 24.00	540.96	540.98

STAGE CONSTRUCTION LINE (NB & SB)

Location	Station	Offset SB / NB	Theoretical Grade Elevations	Theoretical Grade Elevations Adjusted For Dead Load Deflection and Grinding
CL Pier 7	796+35.99	-18.46 / 18.46	541.05	541.07
CL Brg. Pier 7	796+36.53	-18.46 / 18.46	541.05	541.07
A	796+46.53	-18.46 / 18.46	541.05	541.09
B	796+56.53	-18.46 / 18.46	541.06	541.12
C	796+66.53	-18.46 / 18.46	541.07	541.14
D	796+76.53	-18.46 / 18.46	541.08	541.16
E	796+86.53	-18.46 / 18.46	541.08	541.17
F	796+96.53	-18.46 / 18.46	541.09	541.18
G	797+06.53	-18.46 / 18.46	541.10	541.19
H	797+16.53	-18.46 / 18.46	541.10	541.18
I	797+26.53	-18.46 / 18.46	541.11	541.18
J	797+36.53	-18.46 / 18.46	541.11	541.17
K	797+46.53	-18.46 / 18.46	541.12	541.17
L	797+56.53	-18.46 / 18.46	541.12	541.15
M	797+66.53	-18.46 / 18.46	541.12	541.14
CL Pier 6	797+78.28	-18.46 / 18.46	541.13	541.15
N	797+88.28	-18.46 / 18.46	541.13	541.16
O	797+98.28	-18.46 / 18.46	541.13	541.17
P	798+08.28	-18.46 / 18.46	541.14	541.20
Q	798+18.28	-18.46 / 18.46	541.14	541.21
R	798+28.28	-18.46 / 18.46	541.14	541.23
S	798+38.28	-18.46 / 18.46	541.14	541.24
T	798+48.28	-18.46 / 18.46	541.14	541.26
U	798+58.28	-18.46 / 18.46	541.14	541.26
V	798+68.28	-18.46 / 18.46	541.14	541.27
W	798+78.28	-18.46 / 18.46	541.14	541.26
X	798+88.28	-18.46 / 18.46	541.14	541.26
Y	798+98.28	-18.46 / 18.46	541.14	541.24
Z	799+08.28	-18.46 / 18.46	541.14	541.23
AA	799+18.28	-18.46 / 18.46	541.14	541.21
BB	799+28.28	-18.46 / 18.46	541.14	541.20
CC	799+38.28	-18.46 / 18.46	541.13	541.17
DD	799+48.28	-18.46 / 18.46	541.13	541.16
CL Pier 5	799+58.28	-18.46 / 18.46	541.13	541.15
EE	799+68.28	-18.46 / 18.46	541.12	541.14
FF	799+78.28	-18.46 / 18.46	541.12	541.15
GG	799+88.28	-18.46 / 18.46	541.11	541.15
HH	799+98.28	-18.46 / 18.46	541.11	541.17
II	800+08.28	-18.46 / 18.46	541.11	541.18
JJ	800+18.28	-18.46 / 18.46	541.10	541.18
KK	800+28.28	-18.46 / 18.46	541.09	541.18
LL	800+38.28	-18.46 / 18.46	541.09	541.18
MM	800+48.28	-18.46 / 18.46	541.08	541.17
NN	800+58.28	-18.46 / 18.46	541.07	541.16
OO	800+68.28	-18.46 / 18.46	541.07	541.14
PP	800+78.28	-18.46 / 18.46	541.06	541.12
QQ	800+88.28	-18.46 / 18.46	541.05	541.09
CL Brg. Pier 4	801+00.03	-18.46 / 18.46	541.04	541.06
CL Pier 4	801+00.57	-18.46 / 18.46	541.04	541.06

GIRDER 5 & GIRDER 14

Location	Station	Offset Girder 5 / Girder 14	Theoretical Grade Elevations	Theoretical Grade Elevations Adjusted For Dead Load Deflection and Grinding
CL Pier 7	796+35.99	-16.50 / 16.50	541.08	541.10
CL Brg. Pier 7	796+36.53	-16.50 / 16.50	541.08	541.10
A	796+46.53	-16.50 / 16.50	541.08	541.12
B	796+56.53	-16.50 / 16.50	541.09	541.15
C	796+66.53	-16.50 / 16.50	541.10	541.17
D	796+76.53	-16.50 / 16.50	541.11	541.19
E	796+86.53	-16.50 / 16.50	541.11	541.20
F	796+96.53	-16.50 / 16.50	541.12	541.21
G	797+06.53	-16.50 / 16.50	541.13	541.22
H	797+16.53	-16.50 / 16.50	541.13	541.21
I	797+26.53	-16.50 / 16.50	541.14	541.21
J	797+36.53	-16.50 / 16.50	541.14	541.20
K	797+46.53	-16.50 / 16.50	541.15	541.20
L	797+56.53	-16.50 / 16.50	541.15	541.18
M	797+66.53	-16.50 / 16.50	541.15	541.17
CL Pier 6	797+78.28	-16.50 / 16.50	541.16	541.18
N	797+88.28	-16.50 / 16.50	541.16	541.19
O	797+98.28	-16.50 / 16.50	541.16	541.20
P	798+08.28	-16.50 / 16.50	541.17	541.23
Q	798+18.28	-16.50 / 16.50	541.17	541.24
R	798+28.28	-16.50 / 16.50	541.17	541.26
S	798+38.28	-16.50 / 16.50	541.17	541.27
T	798+48.28	-16.50 / 16.50	541.17	541.29
U	798+58.28	-16.50 / 16.50	541.17	541.29
V	798+68.28	-16.50 / 16.50	541.17	541.30
W	798+78.28	-16.50 / 16.50	541.17	541.29
X	798+88.28	-16.50 / 16.50	541.17	541.29
Y	798+98.28	-16.50 / 16.50	541.17	541.27
Z	799+08.28	-16.50 / 16.50	541.17	541.26
AA	799+18.28	-16.50 / 16.50	541.17	541.24
BB	799+28.28	-16.50 / 16.50	541.16	541.22
CC	799+38.28	-16.50 / 16.50	541.16	541.20
DD	799+48.28	-16.50 / 16.50	541.16	541.19
CL Pier 5	799+58.28	-16.50 / 16.50	541.16	541.18
EE	799+68.28	-16.50 / 16.50	541.15	541.17
FF	799+78.28	-16.50 / 16.50	541.15	541.18
GG	799+88.28	-16.50 / 16.50	541.14	541.18
HH	799+98.28	-16.50 / 16.50	541.14	541.20
II	800+08.28	-16.50 / 16.50	541.13	541.20
JJ	800+18.28	-16.50 / 16.50	541.13	541.21
KK	800+28.28	-16.50 / 16.50	541.12	541.21
LL	800+38.28	-16.50 / 16.50	541.12	541.21
MM	800+48.28	-16.50 / 16.50	541.11	541.20
NN	800+58.28	-16.50 / 16.50	541.10	541.19
OO	800+68.28	-16.50 / 16.50	541.10	541.17
PP	800+78.28	-16.50 / 16.50	541.09	541.15
QQ	800+88.28	-16.50 / 16.50	541.08	541.12
CL Brg. Pier 4	801+00.03	-16.50 / 16.50	541.07	541.09
CL Pier 4	801+00.57	-16.50 / 16.50	541.07	541.09

Note:
SB offsets are from SB PGL and NB offsets are from NB PGL.

CMT
License No. 184-000613 © Copyright CMT, Inc.

USER NAME = bholland	DESIGNED - MAC	REVISED -	
	DRAWN - VT	REVISED -	
PLOT SCALE = N/A	CHECKED - DH	REVISED -	
PLOT DATE = 3/21/2024	DATE - MARCH 2024	REVISED -	

STATE OF ILLINOIS
DEPARTMENT OF TRANSPORTATION

DECK ELEVATIONS - VIII
STRUCTURE NO. 084-0018 (NB) & 084-0019 (SB)

SCALE: | SHEET 13 OF 67 SHEETS | STA. | TO STA.

F.A.I. RTE.	SECTION	COUNTY	TOTAL SHEETS	SHEET NO.
55	(84-2BR-1)D,BY,BP,BRR	SANGAMON	139	55
		CONTRACT NO. 72K98		
		ILLINOIS FED. AID PROJECT		

ROADWAY CROWN (SB & NB)

Location	Station	Offset SB / NB	Theoretical Grade Elevations	Theoretical Grade Elevations Adjusted For Dead Load Deflection and Grinding
CL Pier 7	796+35.99	-12.00 / 12.00	541.14	541.16
CL Brg. Pier 7	796+36.53	-12.00 / 12.00	541.14	541.16
A	796+46.53	-12.00 / 12.00	541.15	541.19
B	796+56.53	-12.00 / 12.00	541.16	541.22
C	796+66.53	-12.00 / 12.00	541.17	541.24
D	796+76.53	-12.00 / 12.00	541.17	541.25
E	796+86.53	-12.00 / 12.00	541.18	541.27
F	796+96.53	-12.00 / 12.00	541.19	541.28
G	797+06.53	-12.00 / 12.00	541.19	541.28
H	797+16.53	-12.00 / 12.00	541.20	541.28
I	797+26.53	-12.00 / 12.00	541.20	541.27
J	797+36.53	-12.00 / 12.00	541.21	541.27
K	797+46.53	-12.00 / 12.00	541.21	541.26
L	797+56.53	-12.00 / 12.00	541.22	541.25
M	797+66.53	-12.00 / 12.00	541.22	541.24
CL Pier 6	797+78.28	-12.00 / 12.00	541.23	541.25
N	797+88.28	-12.00 / 12.00	541.23	541.26
O	797+98.28	-12.00 / 12.00	541.23	541.27
P	798+08.28	-12.00 / 12.00	541.23	541.29
Q	798+18.28	-12.00 / 12.00	541.24	541.31
R	798+28.28	-12.00 / 12.00	541.24	541.33
S	798+38.28	-12.00 / 12.00	541.24	541.34
T	798+48.28	-12.00 / 12.00	541.24	541.36
U	798+58.28	-12.00 / 12.00	541.24	541.36
V	798+68.28	-12.00 / 12.00	541.24	541.37
W	798+78.28	-12.00 / 12.00	541.24	541.36
X	798+88.28	-12.00 / 12.00	541.24	541.36
Y	798+98.28	-12.00 / 12.00	541.24	541.34
Z	799+08.28	-12.00 / 12.00	541.24	541.33
AA	799+18.28	-12.00 / 12.00	541.23	541.30
BB	799+28.28	-12.00 / 12.00	541.23	541.29
CC	799+38.28	-12.00 / 12.00	541.23	541.27
DD	799+48.28	-12.00 / 12.00	541.23	541.26
CL Pier 5	799+58.28	-12.00 / 12.00	541.22	541.24
EE	799+68.28	-12.00 / 12.00	541.22	541.24
FF	799+78.28	-12.00 / 12.00	541.22	541.25
GG	799+88.28	-12.00 / 12.00	541.21	541.25
HH	799+98.28	-12.00 / 12.00	541.21	541.27
II	800+08.28	-12.00 / 12.00	541.20	541.27
JJ	800+18.28	-12.00 / 12.00	541.20	541.28
KK	800+28.28	-12.00 / 12.00	541.19	541.28
LL	800+38.28	-12.00 / 12.00	541.18	541.27
MM	800+48.28	-12.00 / 12.00	541.18	541.27
NN	800+58.28	-12.00 / 12.00	541.17	541.26
OO	800+68.28	-12.00 / 12.00	541.16	541.23
PP	800+78.28	-12.00 / 12.00	541.16	541.22
QQ	800+88.28	-12.00 / 12.00	541.15	541.19
CL Brg. Pier 4	801+00.03	-12.00 / 12.00	541.14	541.16
CL Pier 4	801+00.57	-12.00 / 12.00	541.14	541.16

GIRDER 6 & GIRDER 13

Location	Station	Offset Girder 6 / Girder 13	Theoretical Grade Elevations	Theoretical Grade Elevations Adjusted For Dead Load Deflection and Grinding
CL Pier 7	796+35.99	-9.00 / 9.00	541.10	541.12
CL Brg. Pier 7	796+36.53	-9.00 / 9.00	541.10	541.12
A	796+46.53	-9.00 / 9.00	541.11	541.15
B	796+56.53	-9.00 / 9.00	541.11	541.16
C	796+66.53	-9.00 / 9.00	541.12	541.19
D	796+76.53	-9.00 / 9.00	541.13	541.21
E	796+86.53	-9.00 / 9.00	541.14	541.22
F	796+96.53	-9.00 / 9.00	541.14	541.22
G	797+06.53	-9.00 / 9.00	541.15	541.23
H	797+16.53	-9.00 / 9.00	541.15	541.23
I	797+26.53	-9.00 / 9.00	541.16	541.23
J	797+36.53	-9.00 / 9.00	541.16	541.21
K	797+46.53	-9.00 / 9.00	541.17	541.21
L	797+56.53	-9.00 / 9.00	541.17	541.20
M	797+66.53	-9.00 / 9.00	541.18	541.20
CL Pier 6	797+78.28	-9.00 / 9.00	541.18	541.20
N	797+88.28	-9.00 / 9.00	541.18	541.21
O	797+98.28	-9.00 / 9.00	541.19	541.23
P	798+08.28	-9.00 / 9.00	541.19	541.24
Q	798+18.28	-9.00 / 9.00	541.19	541.26
R	798+28.28	-9.00 / 9.00	541.19	541.27
S	798+38.28	-9.00 / 9.00	541.19	541.28
T	798+48.28	-9.00 / 9.00	541.19	541.30
U	798+58.28	-9.00 / 9.00	541.19	541.30
V	798+68.28	-9.00 / 9.00	541.19	541.30
W	798+78.28	-9.00 / 9.00	541.19	541.30
X	798+88.28	-9.00 / 9.00	541.19	541.30
Y	798+98.28	-9.00 / 9.00	541.19	541.29
Z	799+08.28	-9.00 / 9.00	541.19	541.27
AA	799+18.28	-9.00 / 9.00	541.19	541.26
BB	799+28.28	-9.00 / 9.00	541.19	541.24
CC	799+38.28	-9.00 / 9.00	541.18	541.22
DD	799+48.28	-9.00 / 9.00	541.18	541.21
CL Pier 5	799+58.28	-9.00 / 9.00	541.18	541.20
EE	799+68.28	-9.00 / 9.00	541.17	541.19
FF	799+78.28	-9.00 / 9.00	541.17	541.20
GG	799+88.28	-9.00 / 9.00	541.17	541.21
HH	799+98.28	-9.00 / 9.00	541.16	541.21
II	800+08.28	-9.00 / 9.00	541.16	541.22
JJ	800+18.28	-9.00 / 9.00	541.15	541.22
KK	800+28.28	-9.00 / 9.00	541.15	541.23
LL	800+38.28	-9.00 / 9.00	541.14	541.22
MM	800+48.28	-9.00 / 9.00	541.13	541.21
NN	800+58.28	-9.00 / 9.00	541.13	541.21
OO	800+68.28	-9.00 / 9.00	541.12	541.19
PP	800+78.28	-9.00 / 9.00	541.11	541.17
QQ	800+88.28	-9.00 / 9.00	541.10	541.14
CL Brg. Pier 4	801+00.03	-9.00 / 9.00	541.09	541.11
CL Pier 4	801+00.57	-9.00 / 9.00	541.09	541.11

GIRDER 7 & GIRDER 12

Location	Station	Offset Girder 7 / Girder 12	Theoretical Grade Elevations	Theoretical Grade Elevations Adjusted For Dead Load Deflection and Grinding
CL Pier 7	796+35.99	-3.00 / 3.00	541.01	541.03
CL Brg. Pier 7	796+36.53	-3.00 / 3.00	541.01	541.03
A	796+46.53	-3.00 / 3.00	541.02	541.06
B	796+56.53	-3.00 / 3.00	541.02	541.08
C	796+66.53	-3.00 / 3.00	541.03	541.10
D	796+76.53	-3.00 / 3.00	541.04	541.12
E	796+86.53	-3.00 / 3.00	541.05	541.14
F	796+96.53	-3.00 / 3.00	541.05	541.14
G	797+06.53	-3.00 / 3.00	541.06	541.15
H	797+16.53	-3.00 / 3.00	541.06	541.14
I	797+26.53	-3.00 / 3.00	541.07	541.14
J	797+36.53	-3.00 / 3.00	541.07	541.13
K	797+46.53	-3.00 / 3.00	541.08	541.12
L	797+56.53	-3.00 / 3.00	541.08	541.11
M	797+66.53	-3.00 / 3.00	541.09	541.12
CL Pier 6	797+78.28	-3.00 / 3.00	541.09	541.11
N	797+88.28	-3.00 / 3.00	541.09	541.12
O	797+98.28	-3.00 / 3.00	541.10	541.13
P	798+08.28	-3.00 / 3.00	541.10	541.14
Q	798+18.28	-3.00 / 3.00	541.10	541.15
R	798+28.28	-3.00 / 3.00	541.10	541.17
S	798+38.28	-3.00 / 3.00	541.10	541.18
T	798+48.28	-3.00 / 3.00	541.10	541.19
U	798+58.28	-3.00 / 3.00	541.10	541.19
V	798+68.28	-3.00 / 3.00	541.10	541.20
W	798+78.28	-3.00 / 3.00	541.10	541.19
X	798+88.28	-3.00 / 3.00	541.10	541.19
Y	798+98.28	-3.00 / 3.00	541.10	541.18
Z	799+08.28	-3.00 / 3.00	541.10	541.17
AA	799+18.28	-3.00 / 3.00	541.10	541.15
BB	799+28.28	-3.00 / 3.00	541.10	541.14
CC	799+38.28	-3.00 / 3.00	541.09	541.12
DD	799+48.28	-3.00 / 3.00	541.09	541.12
CL Pier 5	799+58.28	-3.00 / 3.00	541.09	541.11
EE	799+68.28	-3.00 / 3.00	541.08	541.10
FF	799+78.28	-3.00 / 3.00	541.08	541.11
GG	799+88.28	-3.00 / 3.00	541.08	541.12
HH	799+98.28	-3.00 / 3.00	541.07	541.12
II	800+08.28	-3.00 / 3.00	541.07	541.14
JJ	800+18.28	-3.00 / 3.00	541.06	541.14
KK	800+28.28	-3.00 / 3.00	541.06	541.15
LL	800+38.28	-3.00 / 3.00	541.05	541.14
MM	800+48.28	-3.00 / 3.00	541.04	541.13
NN	800+58.28	-3.00 / 3.00	541.04	541.13
OO	800+68.28	-3.00 / 3.00	541.03	541.10
PP	800+78.28	-3.00 / 3.00	541.02	541.08
QQ	800+88.28	-3.00 / 3.00	541.01	541.05
CL Brg. Pier 4	801+00.03	-3.00 / 3.00	541.00	541.02
CL Pier 4	801+00.57	-3.00 / 3.00	541.00	541.02

Note;
SB offsets are from SB PGL and NB offsets are from NB PGL.

FILE NAME: pw://centerpiew.bentley.com:cmt-connect-projects/Documents/IDOT/21004103-00/410300/Bridge/Sangamon River Bridges/CADD_Sheets/0840018 & 0840015-72K98-014-Deck Elevations - IX

CMT
License No. 184-000613 © Copyright CMT, Inc.

USER NAME = bholland	DESIGNED - MAC	REVISED -	
	DRAWN - VT	REVISED -	
PLOT SCALE = N/A	CHECKED - DH	REVISED -	
PLOT DATE = 3/21/2024	DATE - MARCH 2024	REVISED -	

STATE OF ILLINOIS
DEPARTMENT OF TRANSPORTATION

DECK ELEVATIONS - IX
STRUCTURE NO. 084-0018 (NB) & 084-0019 (SB)

SCALE: | SHEET 14 OF 67 SHEETS | STA. | TO STA.

F.A.I. RTE.	SECTION	COUNTY	TOTAL SHEETS	SHEET NO.
55	(84-2BR-1)D,BY,BP,BRR	SANGAMON	139	56
		CONTRACT NO. 72K98		
		ILLINOIS FED. AID PROJECT		

SB PGL & NB PGL

Location	Station	Offset	Theoretical Grade Elevations	Theoretical Grade Elevations Adjusted For Dead Load Deflection and Grinding
CL Pier 7	796+35.99	0.00	540.96	540.98
CL Brg. Pier 7	796+36.53	0.00	540.96	540.98
A	796+46.53	0.00	540.97	541.02
B	796+56.53	0.00	540.98	541.05
C	796+66.53	0.00	540.99	541.08
D	796+76.53	0.00	540.99	541.10
E	796+86.53	0.00	541.00	541.11
F	796+96.53	0.00	541.01	541.13
G	797+06.53	0.00	541.01	541.12
H	797+16.53	0.00	541.02	541.12
I	797+26.53	0.00	541.02	541.11
J	797+36.53	0.00	541.03	541.10
K	797+46.53	0.00	541.03	541.08
L	797+56.53	0.00	541.04	541.08
M	797+66.53	0.00	541.04	541.07
CL Pier 6	797+78.28	0.00	541.05	541.07
N	797+88.28	0.00	541.05	541.08
O	797+98.28	0.00	541.05	541.09
P	798+08.28	0.00	541.05	541.11
Q	798+18.28	0.00	541.06	541.13
R	798+28.28	0.00	541.06	541.15
S	798+38.28	0.00	541.06	541.17
T	798+48.28	0.00	541.06	541.18
U	798+58.28	0.00	541.06	541.19
V	798+68.28	0.00	541.06	541.20
W	798+78.28	0.00	541.06	541.19
X	798+88.28	0.00	541.06	541.18
Y	798+98.28	0.00	541.06	541.17
Z	799+08.28	0.00	541.06	541.15
AA	799+18.28	0.00	541.05	541.12
BB	799+28.28	0.00	541.05	541.11
CC	799+38.28	0.00	541.05	541.09
DD	799+48.28	0.00	541.05	541.08
CL Pier 5	799+58.28	0.00	541.04	541.06
EE	799+68.28	0.00	541.04	541.07
FF	799+78.28	0.00	541.04	541.08
GG	799+88.28	0.00	541.03	541.08
HH	799+98.28	0.00	541.03	541.10
II	800+08.28	0.00	541.02	541.10
JJ	800+18.28	0.00	541.02	541.12
KK	800+28.28	0.00	541.01	541.12
LL	800+38.28	0.00	541.00	541.12
MM	800+48.28	0.00	541.00	541.11
NN	800+58.28	0.00	540.99	541.10
OO	800+68.28	0.00	540.98	541.07
PP	800+78.28	0.00	540.98	541.05
QQ	800+88.28	0.00	540.97	541.02
CL Brg. Pier 4	801+00.03	0.00	540.96	540.98
CL Pier 4	801+00.57	0.00	540.96	540.98

GIRDER 8 & GIRDER 11

Location	Station	Offset Girder 8 / Girder 11	Theoretical Grade Elevations	Theoretical Grade Elevations Adjusted For Dead Load Deflection and Grinding
CL Pier 7	796+35.99	2.50 / -2.50	540.91	540.93
CL Brg. Pier 7	796+36.53	2.50 / -2.50	540.91	540.93
A	796+46.53	2.50 / -2.50	540.92	540.97
B	796+56.53	2.50 / -2.50	540.93	541.00
C	796+66.53	2.50 / -2.50	540.94	541.03
D	796+76.53	2.50 / -2.50	540.94	541.05
E	796+86.53	2.50 / -2.50	540.95	541.06
F	796+96.53	2.50 / -2.50	540.96	541.08
G	797+06.53	2.50 / -2.50	540.96	541.07
H	797+16.53	2.50 / -2.50	540.97	541.07
I	797+26.53	2.50 / -2.50	540.97	541.06
J	797+36.53	2.50 / -2.50	540.98	541.05
K	797+46.53	2.50 / -2.50	540.98	541.03
L	797+56.53	2.50 / -2.50	540.99	541.03
M	797+66.53	2.50 / -2.50	540.99	541.02
CL Pier 6	797+78.28	2.50 / -2.50	541.00	541.02
N	797+88.28	2.50 / -2.50	541.00	541.03
O	797+98.28	2.50 / -2.50	541.00	541.04
P	798+08.28	2.50 / -2.50	541.00	541.06
Q	798+18.28	2.50 / -2.50	541.01	541.08
R	798+28.28	2.50 / -2.50	541.01	541.10
S	798+38.28	2.50 / -2.50	541.01	541.12
T	798+48.28	2.50 / -2.50	541.01	541.13
U	798+58.28	2.50 / -2.50	541.01	541.14
V	798+68.28	2.50 / -2.50	541.01	541.15
W	798+78.28	2.50 / -2.50	541.01	541.14
X	798+88.28	2.50 / -2.50	541.01	541.13
Y	798+98.28	2.50 / -2.50	541.01	541.12
Z	799+08.28	2.50 / -2.50	541.01	541.10
AA	799+18.28	2.50 / -2.50	541.00	541.07
BB	799+28.28	2.50 / -2.50	541.00	541.06
CC	799+38.28	2.50 / -2.50	541.00	541.04
DD	799+48.28	2.50 / -2.50	541.00	541.03
CL Pier 5	799+58.28	2.50 / -2.50	540.99	541.01
EE	799+68.28	2.50 / -2.50	540.99	541.02
FF	799+78.28	2.50 / -2.50	540.99	541.03
GG	799+88.28	2.50 / -2.50	540.98	541.03
HH	799+98.28	2.50 / -2.50	540.98	541.05
II	800+08.28	2.50 / -2.50	540.97	541.05
JJ	800+18.28	2.50 / -2.50	540.97	541.07
KK	800+28.28	2.50 / -2.50	540.96	541.07
LL	800+38.28	2.50 / -2.50	540.95	541.07
MM	800+48.28	2.50 / -2.50	540.95	541.06
NN	800+58.28	2.50 / -2.50	540.94	541.05
OO	800+68.28	2.50 / -2.50	540.93	541.02
PP	800+78.28	2.50 / -2.50	540.93	541.00
QQ	800+88.28	2.50 / -2.50	540.92	540.97
CL Brg. Pier 4	801+00.03	2.50 / -2.50	540.91	540.93
CL Pier 4	801+00.57	2.50 / -2.50	540.91	540.93

GIRDER 9 & GIRDER 10

Location	Station	Offset Girder 9 / Girder 10	Theoretical Grade Elevations	Theoretical Grade Elevations Adjusted For Dead Load Deflection and Grinding
CL Pier 7	796+35.99	8.00 / -8.00	540.80	540.82
CL Brg. Pier 7	796+36.53	8.00 / -8.00	540.80	540.82
A	796+46.53	8.00 / -8.00	540.81	540.86
B	796+56.53	8.00 / -8.00	540.82	540.89
C	796+66.53	8.00 / -8.00	540.83	540.92
D	796+76.53	8.00 / -8.00	540.83	540.94
E	796+86.53	8.00 / -8.00	540.84	540.95
F	796+96.53	8.00 / -8.00	540.85	540.97
G	797+06.53	8.00 / -8.00	540.85	540.96
H	797+16.53	8.00 / -8.00	540.86	540.96
I	797+26.53	8.00 / -8.00	540.86	540.95
J	797+36.53	8.00 / -8.00	540.87	540.94
K	797+46.53	8.00 / -8.00	540.87	540.92
L	797+56.53	8.00 / -8.00	540.88	540.92
M	797+66.53	8.00 / -8.00	540.88	540.91
CL Pier 6	797+78.28	8.00 / -8.00	540.89	540.91
N	797+88.28	8.00 / -8.00	540.89	540.92
O	797+98.28	8.00 / -8.00	540.89	540.93
P	798+08.28	8.00 / -8.00	540.89	540.95
Q	798+18.28	8.00 / -8.00	540.90	540.97
R	798+28.28	8.00 / -8.00	540.90	540.99
S	798+38.28	8.00 / -8.00	540.90	541.01
T	798+48.28	8.00 / -8.00	540.90	541.02
U	798+58.28	8.00 / -8.00	540.90	541.03
V	798+68.28	8.00 / -8.00	540.90	541.04
W	798+78.28	8.00 / -8.00	540.90	541.03
X	798+88.28	8.00 / -8.00	540.90	541.02
Y	798+98.28	8.00 / -8.00	540.90	541.01
Z	799+08.28	8.00 / -8.00	540.90	540.99
AA	799+18.28	8.00 / -8.00	540.89	540.96
BB	799+28.28	8.00 / -8.00	540.89	540.95
CC	799+38.28	8.00 / -8.00	540.89	540.93
DD	799+48.28	8.00 / -8.00	540.89	540.92
CL Pier 5	799+58.28	8.00 / -8.00	540.88	540.90
EE	799+68.28	8.00 / -8.00	540.88	540.91
FF	799+78.28	8.00 / -8.00	540.88	540.92
GG	799+88.28	8.00 / -8.00	540.87	540.92
HH	799+98.28	8.00 / -8.00	540.87	540.94
II	800+08.28	8.00 / -8.00	540.86	540.94
JJ	800+18.28	8.00 / -8.00	540.86	540.96
KK	800+28.28	8.00 / -8.00	540.85	540.96
LL	800+38.28	8.00 / -8.00	540.84	540.96
MM	800+48.28	8.00 / -8.00	540.84	540.95
NN	800+58.28	8.00 / -8.00	540.83	540.94
OO	800+68.28	8.00 / -8.00	540.82	540.91
PP	800+78.28	8.00 / -8.00	540.82	540.89
QQ	800+88.28	8.00 / -8.00	540.81	540.86
CL Brg. Pier 4	801+00.03	8.00 / -8.00	540.80	540.82
CL Pier 4	801+00.57	8.00 / -8.00	540.80	540.82

Note:
SB offsets are from SB PGI and NB offsets are from NB PGL.

CMT
License No. 184-000613 © Copyright CMT, Inc.

USER NAME = bholland	DESIGNED - MAC	REVISED -	
	DRAWN - VT	REVISED -	
PLOT SCALE = N/A	CHECKED - DH	REVISED -	
PLOT DATE = 3/21/2024	DATE - MARCH 2024	REVISED -	

STATE OF ILLINOIS
DEPARTMENT OF TRANSPORTATION

DECK ELEVATIONS - X
STRUCTURE NO. 084-0018 (NB) & 084-0019 (SB)

SCALE: | SHEET 15 OF 67 SHEETS | STA. | TO STA.

F.A.I. RTE.	SECTION	COUNTY	TOTAL SHEETS	SHEET NO.
55	(84-2BR-1)D,BY,BP,BRR	SANGAMON	139	57
		CONTRACT NO. 72K98		
		ILLINOIS FED. AID PROJECT		

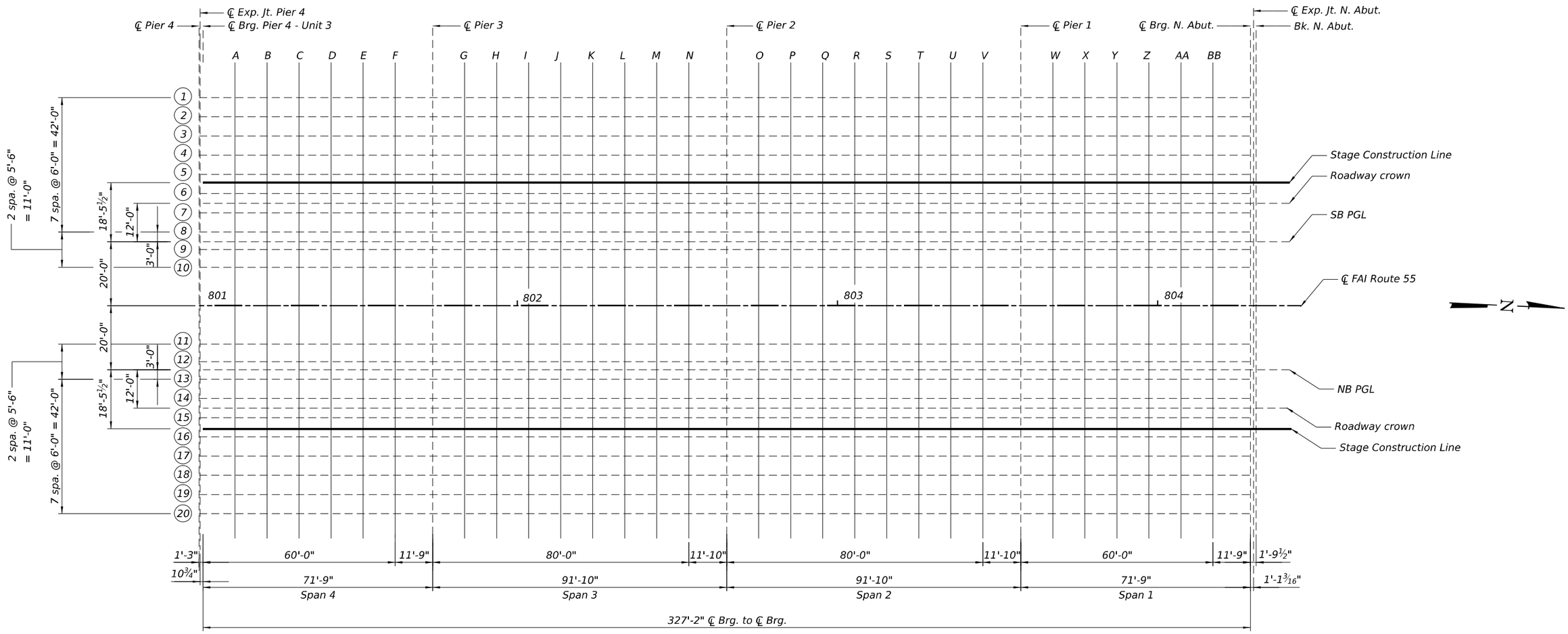

DECK ELEVATION LAYOUT - UNIT 3

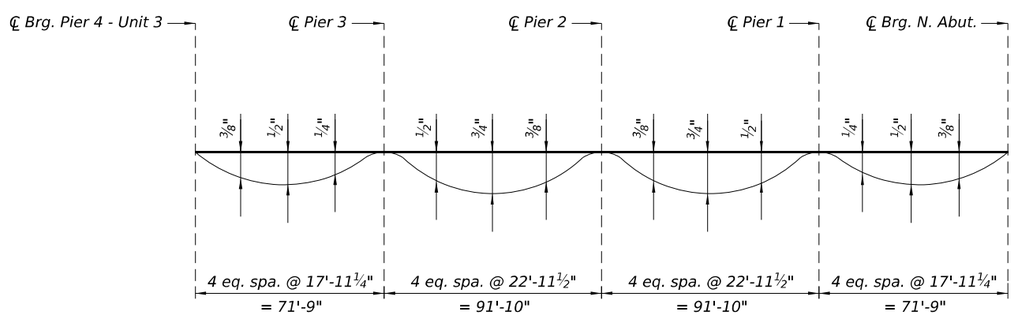

DEAD LOAD DEFLECTION DIAGRAM

(For new beams only.)
(Includes weight of concrete only.)

Note:
The above deflections are not to be used in the field if the engineer is working from the grade elevations adjusted for dead load deflections as shown on sheets 17 through 20 of 67.

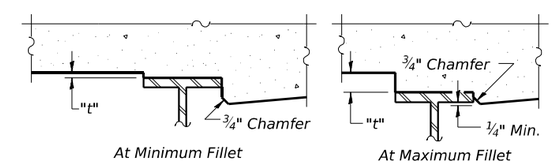

After all structural steel has been erected, elevations of the top flanges of the beams shall be taken at intervals shown on this sheet. These elevations subtracted from the "Theoretical Grade Elevations Adjusted for Dead Load Deflection" shown on sheets 17 thru 20 of 67, minus slab thickness, equals the fillet heights "t" above top flange of beams.

FILLET HEIGHTS

CMT
License No. 184-000613
© Copyright CMT, Inc.

USER NAME = bholland	DESIGNED - MAC	REVISED -	
	DRAWN - VT	REVISED -	
PLOT SCALE = N/A	CHECKED - DH	REVISED -	
PLOT DATE = 3/21/2024	DATE - MARCH 2024	REVISED -	

STATE OF ILLINOIS
DEPARTMENT OF TRANSPORTATION

DECK ELEVATIONS - XI
STRUCTURE NO. 084-0018 (NB) & 084-0019 (SB)

SCALE: | SHEET 16 OF 67 SHEETS | STA. | TO STA.

F.A.I. RTE.	SECTION	COUNTY	TOTAL SHEETS	SHEET NO.
55	(84-2BR-1)D,BY,BP,BRR	SANGAMON	139	58
		CONTRACT NO.	72K98	
		ILLINOIS	FED. AID PROJECT	

BEAM 1 & BEAM 20

Location	Station	Offset Beam 1/ Beam 20	Theoretical Grade Elevations	Theoretical Grade Elevations Adjusted For Dead Load Deflection and Grinding
CL Pier 4	801+00.57	-45.00 / 45.00	540.60	540.62
CL Exp. Jt. Pier 4	801+00.92	-45.00 / 45.00	540.60	540.62
CL Brg. Pier 4	801+01.82	-45.00 / 45.00	540.60	540.62
A	801+11.82	-45.00 / 45.00	540.59	540.63
B	801+21.82	-45.00 / 45.00	540.58	540.64
C	801+31.82	-45.00 / 45.00	540.57	540.64
D	801+41.82	-45.00 / 45.00	540.56	540.62
E	801+51.82	-45.00 / 45.00	540.55	540.60
F	801+61.82	-45.00 / 45.00	540.54	540.57
CL Pier 3	801+73.57	-45.00 / 45.00	540.53	540.55
G	801+83.57	-45.00 / 45.00	540.51	540.54
H	801+93.57	-45.00 / 45.00	540.50	540.55
I	802+03.57	-45.00 / 45.00	540.49	540.56
J	802+13.57	-45.00 / 45.00	540.48	540.56
K	802+23.57	-45.00 / 45.00	540.46	540.54
L	802+33.57	-45.00 / 45.00	540.45	540.52
M	802+43.57	-45.00 / 45.00	540.44	540.49
N	802+53.57	-45.00 / 45.00	540.42	540.45
CL Pier 2	802+65.40	-45.00 / 45.00	540.41	540.43
O	802+75.40	-45.00 / 45.00	540.39	540.42
P	802+85.40	-45.00 / 45.00	540.38	540.43
Q	802+95.40	-45.00 / 45.00	540.36	540.43
R	803+05.40	-45.00 / 45.00	540.35	540.43
S	803+15.40	-45.00 / 45.00	540.33	540.41
T	803+25.40	-45.00 / 45.00	540.31	540.38
U	803+35.40	-45.00 / 45.00	540.30	540.36
V	803+45.40	-45.00 / 45.00	540.28	540.32
CL Pier 1	803+57.24	-45.00 / 45.00	540.26	540.28
W	803+67.24	-45.00 / 45.00	540.24	540.27
X	803+77.24	-45.00 / 45.00	540.22	540.26
Y	803+87.24	-45.00 / 45.00	540.20	540.26
Z	803+97.24	-45.00 / 45.00	540.18	540.24
AA	804+07.24	-45.00 / 45.00	540.16	540.22
BB	804+17.24	-45.00 / 45.00	540.14	540.19
CL Brg. N. Abut.	804+28.99	-45.00 / 45.00	540.12	540.14
CL Exp. Jt. N. Abut.	804+29.68	-45.00 / 45.00	540.12	540.14
Bk. N. Abut.	804+30.78	-45.00 / 45.00	540.11	540.13

BEAM 2 & BEAM 19

Location	Station	Offset Beam 2/ Beam 19	Theoretical Grade Elevations	Theoretical Grade Elevations Adjusted For Dead Load Deflection and Grinding
CL Pier 4	801+00.57	-39.00 / 39.00	540.72	540.74
CL Exp. Jt. Pier 4	801+00.92	-39.00 / 39.00	540.72	540.74
CL Brg. Pier 4	801+01.82	-39.00 / 39.00	540.72	540.74
A	801+11.82	-39.00 / 39.00	540.71	540.75
B	801+21.82	-39.00 / 39.00	540.70	540.76
C	801+31.82	-39.00 / 39.00	540.69	540.76
D	801+41.82	-39.00 / 39.00	540.68	540.74
E	801+51.82	-39.00 / 39.00	540.67	540.72
F	801+61.82	-39.00 / 39.00	540.66	540.69
CL Pier 3	801+73.57	-39.00 / 39.00	540.65	540.67
G	801+83.57	-39.00 / 39.00	540.63	540.66
H	801+93.57	-39.00 / 39.00	540.62	540.67
I	802+03.57	-39.00 / 39.00	540.61	540.68
J	802+13.57	-39.00 / 39.00	540.60	540.68
K	802+23.57	-39.00 / 39.00	540.58	540.66
L	802+33.57	-39.00 / 39.00	540.57	540.64
M	802+43.57	-39.00 / 39.00	540.56	540.61
N	802+53.57	-39.00 / 39.00	540.54	540.57
CL Pier 2	802+65.40	-39.00 / 39.00	540.53	540.55
O	802+75.40	-39.00 / 39.00	540.51	540.54
P	802+85.40	-39.00 / 39.00	540.50	540.55
Q	802+95.40	-39.00 / 39.00	540.48	540.55
R	803+05.40	-39.00 / 39.00	540.47	540.55
S	803+15.40	-39.00 / 39.00	540.45	540.53
T	803+25.40	-39.00 / 39.00	540.43	540.50
U	803+35.40	-39.00 / 39.00	540.42	540.48
V	803+45.40	-39.00 / 39.00	540.40	540.44
CL Pier 1	803+57.24	-39.00 / 39.00	540.38	540.40
W	803+67.24	-39.00 / 39.00	540.36	540.39
X	803+77.24	-39.00 / 39.00	540.34	540.38
Y	803+87.24	-39.00 / 39.00	540.32	540.38
Z	803+97.24	-39.00 / 39.00	540.30	540.36
AA	804+07.24	-39.00 / 39.00	540.28	540.34
BB	804+17.24	-39.00 / 39.00	540.26	540.31
CL Brg. N. Abut.	804+28.99	-39.00 / 39.00	540.24	540.26
CL Exp. Jt. N. Abut.	804+29.68	-39.00 / 39.00	540.24	540.26
Bk. N. Abut.	804+30.78	-39.00 / 39.00	540.23	540.25

BEAM 3 & BEAM 18

Location	Station	Offset Beam 3/ Beam 18	Theoretical Grade Elevations	Theoretical Grade Elevations Adjusted For Dead Load Deflection and Grinding
CL Pier 4	801+00.57	-33.00 / 33.00	540.82	540.84
CL Exp. Jt. Pier 4	801+00.92	-33.00 / 33.00	540.82	540.84
CL Brg. Pier 4	801+01.82	-33.00 / 33.00	540.82	540.84
A	801+11.82	-33.00 / 33.00	540.81	540.85
B	801+21.82	-33.00 / 33.00	540.80	540.86
C	801+31.82	-33.00 / 33.00	540.79	540.86
D	801+41.82	-33.00 / 33.00	540.78	540.84
E	801+51.82	-33.00 / 33.00	540.77	540.82
F	801+61.82	-33.00 / 33.00	540.76	540.79
CL Pier 3	801+73.57	-33.00 / 33.00	540.75	540.77
G	801+83.57	-33.00 / 33.00	540.74	540.77
H	801+93.57	-33.00 / 33.00	540.73	540.78
I	802+03.57	-33.00 / 33.00	540.72	540.79
J	802+13.57	-33.00 / 33.00	540.70	540.78
K	802+23.57	-33.00 / 33.00	540.69	540.77
L	802+33.57	-33.00 / 33.00	540.68	540.75
M	802+43.57	-33.00 / 33.00	540.66	540.71
N	802+53.57	-33.00 / 33.00	540.65	540.68
CL Pier 2	802+65.40	-33.00 / 33.00	540.63	540.65
O	802+75.40	-33.00 / 33.00	540.62	540.65
P	802+85.40	-33.00 / 33.00	540.60	540.65
Q	802+95.40	-33.00 / 33.00	540.59	540.66
R	803+05.40	-33.00 / 33.00	540.57	540.65
S	803+15.40	-33.00 / 33.00	540.55	540.63
T	803+25.40	-33.00 / 33.00	540.54	540.61
U	803+35.40	-33.00 / 33.00	540.52	540.58
V	803+45.40	-33.00 / 33.00	540.50	540.54
CL Pier 1	803+57.24	-33.00 / 33.00	540.48	540.50
W	803+67.24	-33.00 / 33.00	540.46	540.49
X	803+77.24	-33.00 / 33.00	540.45	540.49
Y	803+87.24	-33.00 / 33.00	540.43	540.49
Z	803+97.24	-33.00 / 33.00	540.41	540.47
AA	804+07.24	-33.00 / 33.00	540.39	540.45
BB	804+17.24	-33.00 / 33.00	540.37	540.42
CL Brg. N. Abut.	804+28.99	-33.00 / 33.00	540.34	540.36
CL Exp. Jt. N. Abut.	804+29.68	-33.00 / 33.00	540.34	540.36
Bk. N. Abut.	804+30.78	-33.00 / 33.00	540.34	540.36

BEAM 4 & BEAM 17

Location	Station	Offset Beam 4/ Beam 17	Theoretical Grade Elevations	Theoretical Grade Elevations Adjusted For Dead Load Deflection and Grinding
CL Pier 4	801+00.57	-27.00 / 27.00	540.91	540.93
CL Exp. Jt. Pier 4	801+00.92	-27.00 / 27.00	540.91	540.93
CL Brg. Pier 4 - U3	801+01.82	-27.00 / 27.00	540.91	540.93
A	801+11.82	-27.00 / 27.00	540.90	540.94
B	801+21.82	-27.00 / 27.00	540.89	540.95
C	801+31.82	-27.00 / 27.00	540.88	540.95
D	801+41.82	-27.00 / 27.00	540.87	540.93
E	801+51.82	-27.00 / 27.00	540.86	540.91
F	801+61.82	-27.00 / 27.00	540.85	540.88
CL Pier 3	801+73.57	-27.00 / 27.00	540.84	540.86
G	801+83.57	-27.00 / 27.00	540.83	540.86
H & Exist FS-5	801+93.57	-27.00 / 27.00	540.82	540.87
I	802+03.57	-27.00 / 27.00	540.81	540.88
J	802+13.57	-27.00 / 27.00	540.79	540.87
K	802+23.57	-27.00 / 27.00	540.78	540.86
L	802+33.57	-27.00 / 27.00	540.77	540.84
M	802+43.57	-27.00 / 27.00	540.75	540.80
N	802+53.57	-27.00 / 27.00	540.74	540.77
CL Pier 2	802+65.40	-27.00 / 27.00	540.72	540.74

BEAM 4 & BEAM 17 CONTINUED

Location	Station	Offset Beam 4/ Beam 17	Theoretical Grade Elevations	Theoretical Grade Elevations Adjusted For Dead Load Deflection and Grinding
O	802+75.40	-27.00 / 27.00	540.71	540.74
P	802+85.40	-27.00 / 27.00	540.69	540.74
Q	802+95.40	-27.00 / 27.00	540.68	540.75
R	803+05.40	-27.00 / 27.00	540.66	540.74
S	803+15.40	-27.00 / 27.00	540.64	540.72
T	803+25.40	-27.00 / 27.00	540.63	540.70
U	803+35.40	-27.00 / 27.00	540.61	540.67
V	803+45.40	-27.00 / 27.00	540.59	540.63
CL Pier 1	803+57.24	-27.00 / 27.00	540.57	540.59
W	803+67.24	-27.00 / 27.00	540.55	540.58
X	803+77.24	-27.00 / 27.00	540.54	540.58
Y	803+87.24	-27.00 / 27.00	540.52	540.58
Z	803+97.24	-27.00 / 27.00	540.50	540.56
AA	804+07.24	-27.00 / 27.00	540.48	540.54
BB	804+17.24	-27.00 / 27.00	540.46	540.51
CL Brg. N. Abut.	804+28.99	-27.00 / 27.00	540.43	540.45
CL Exp. Jt. N. Abut.	804+29.68	-27.00 / 27.00	540.43	540.45
Bk. N. Abut.	804+30.78	-27.00 / 27.00	540.43	540.45

Note:
SB offsets are from SB PGL and NB offsets are from NB PGL.

BEAM 5 & BEAM 16

Location	Station	Offset Beam 5 / Beam 16	Theoretical Grade Elevations	Theoretical Grade Elevations Adjusted For Dead Load Deflection and Grinding
CL Pier 4	801+00.57	-21.00 / 21.00	541.00	541.02
CL Exp. Jt. Pier 4	801+00.92	-21.00 / 21.00	541.00	541.02
CL Brg. Pier 4	801+01.82	-21.00 / 21.00	541.00	541.02
A	801+11.82	-21.00 / 21.00	540.99	541.03
B	801+21.82	-21.00 / 21.00	540.98	541.04
C	801+31.82	-21.00 / 21.00	540.97	541.04
D	801+41.82	-21.00 / 21.00	540.96	541.02
E	801+51.82	-21.00 / 21.00	540.95	541.00
F	801+61.82	-21.00 / 21.00	540.94	540.97
CL Pier 3	801+73.57	-21.00 / 21.00	540.93	540.95
G	801+83.57	-21.00 / 21.00	540.92	540.95
H	801+93.57	-21.00 / 21.00	540.91	540.96
I	802+03.57	-21.00 / 21.00	540.90	540.97
J	802+13.57	-21.00 / 21.00	540.88	540.96
K	802+23.57	-21.00 / 21.00	540.87	540.95
L	802+33.57	-21.00 / 21.00	540.86	540.93
M	802+43.57	-21.00 / 21.00	540.84	540.89
N	802+53.57	-21.00 / 21.00	540.83	540.86
CL Pier 2	802+65.40	-21.00 / 21.00	540.81	540.83
O	802+75.40	-21.00 / 21.00	540.80	540.83
P	802+85.40	-21.00 / 21.00	540.78	540.83
Q	802+95.40	-21.00 / 21.00	540.77	540.84
R	803+05.40	-21.00 / 21.00	540.75	540.83
S	803+15.40	-21.00 / 21.00	540.73	540.81
T	803+25.40	-21.00 / 21.00	540.72	540.79
U	803+35.40	-21.00 / 21.00	540.70	540.76
V	803+45.40	-21.00 / 21.00	540.68	540.72
CL Pier 1	803+57.24	-21.00 / 21.00	540.66	540.68
W	803+67.24	-21.00 / 21.00	540.64	540.67
X	803+77.24	-21.00 / 21.00	540.63	540.67
Y	803+87.24	-21.00 / 21.00	540.61	540.67
Z	803+97.24	-21.00 / 21.00	540.59	540.65
AA	804+07.24	-21.00 / 21.00	540.57	540.63
BB	804+17.24	-21.00 / 21.00	540.55	540.60
CL Brg. N. Abut.	804+28.99	-21.00 / 21.00	540.52	540.54
CL Exp. Jt. N. Abut.	804+29.68	-21.00 / 21.00	540.52	540.54
Bk. N. Abut.	804+30.78	-21.00 / 21.00	540.52	540.54

STAGE CONSTRUCTION LINE (NB & SB)

Location	Station	Offset SB / NB	Theoretical Grade Elevations	Theoretical Grade Elevations Adjusted For Dead Load Deflection and Grinding
CL Pier 4	801+00.57	-18.46 / 18.46	541.04	541.06
CL Exp. Jt. Pier 4	801+00.92	-18.46 / 18.46	541.04	541.06
CL Brg. Pier 4	801+01.82	-18.46 / 18.46	541.04	541.06
A	801+11.82	-18.46 / 18.46	541.03	541.07
B	801+21.82	-18.46 / 18.46	541.02	541.08
C	801+31.82	-18.46 / 18.46	541.01	541.08
D	801+41.82	-18.46 / 18.46	541.00	541.06
E	801+51.82	-18.46 / 18.46	540.99	541.04
F	801+61.82	-18.46 / 18.46	540.98	541.01
CL Pier 3	801+73.57	-18.46 / 18.46	540.97	540.99
G	801+83.57	-18.46 / 18.46	540.96	540.99
H	801+93.57	-18.46 / 18.46	540.95	541.00
I	802+03.57	-18.46 / 18.46	540.93	541.00
J	802+13.57	-18.46 / 18.46	540.92	541.00
K	802+23.57	-18.46 / 18.46	540.91	540.99
L	802+33.57	-18.46 / 18.46	540.89	540.96
M	802+43.57	-18.46 / 18.46	540.88	540.93
N	802+53.57	-18.46 / 18.46	540.87	540.90
CL Pier 2	802+65.40	-18.46 / 18.46	540.85	540.87
O	802+75.40	-18.46 / 18.46	540.84	540.87
P	802+85.40	-18.46 / 18.46	540.82	540.87
Q	802+95.40	-18.46 / 18.46	540.80	540.87
R	803+05.40	-18.46 / 18.46	540.79	540.87
S	803+15.40	-18.46 / 18.46	540.77	540.85
T	803+25.40	-18.46 / 18.46	540.76	540.83
U	803+35.40	-18.46 / 18.46	540.74	540.80
V	803+45.40	-18.46 / 18.46	540.72	540.76
CL Pier 1	803+57.24	-18.46 / 18.46	540.70	540.72
W	803+67.24	-18.46 / 18.46	540.68	540.71
X	803+77.24	-18.46 / 18.46	540.66	540.70
Y	803+87.24	-18.46 / 18.46	540.64	540.70
Z	803+97.24	-18.46 / 18.46	540.63	540.69
AA	804+07.24	-18.46 / 18.46	540.61	540.67
BB	804+17.24	-18.46 / 18.46	540.59	540.64
CL Brg. N. Abut.	804+28.99	-18.46 / 18.46	540.56	540.58
CL Exp. Jt. N. Abut.	804+29.68	-18.46 / 18.46	540.56	540.58
Bk. N. Abut.	804+30.78	-18.46 / 18.46	540.56	540.58

BEAM 6 & BEAM 15

Location	Station	Offset Beam 6 / Beam 15	Theoretical Grade Elevations	Theoretical Grade Elevations Adjusted For Dead Load Deflection and Grinding
CL Pier 4	801+00.57	-15.00 / 15.00	541.09	541.11
CL Exp. Jt. Pier 4	801+00.92	-15.00 / 15.00	541.09	541.11
CL Brg. Pier 4	801+01.82	-15.00 / 15.00	541.09	541.11
A	801+11.82	-15.00 / 15.00	541.08	541.12
B	801+21.82	-15.00 / 15.00	541.07	541.13
C	801+31.82	-15.00 / 15.00	541.06	541.13
D	801+41.82	-15.00 / 15.00	541.05	541.11
E	801+51.82	-15.00 / 15.00	541.04	541.09
F	801+61.82	-15.00 / 15.00	541.03	541.06
CL Pier 3	801+73.57	-15.00 / 15.00	541.02	541.04
G	801+83.57	-15.00 / 15.00	541.01	541.04
H	801+93.57	-15.00 / 15.00	541.00	541.05
I	802+03.57	-15.00 / 15.00	540.99	541.06
J	802+13.57	-15.00 / 15.00	540.97	541.05
K	802+23.57	-15.00 / 15.00	540.96	541.04
L	802+33.57	-15.00 / 15.00	540.95	541.02
M	802+43.57	-15.00 / 15.00	540.93	540.98
N	802+53.57	-15.00 / 15.00	540.92	540.95
CL Pier 2	802+65.40	-15.00 / 15.00	540.90	540.92
O	802+75.40	-15.00 / 15.00	540.89	540.92
P	802+85.40	-15.00 / 15.00	540.87	540.92
Q	802+95.40	-15.00 / 15.00	540.86	540.93
R	803+05.40	-15.00 / 15.00	540.84	540.92
S	803+15.40	-15.00 / 15.00	540.82	540.90
T	803+25.40	-15.00 / 15.00	540.81	540.88
U	803+35.40	-15.00 / 15.00	540.79	540.85
V	803+45.40	-15.00 / 15.00	540.77	540.81
CL Pier 1	803+57.24	-15.00 / 15.00	540.75	540.77
W	803+67.24	-15.00 / 15.00	540.73	540.76
X	803+77.24	-15.00 / 15.00	540.72	540.76
Y	803+87.24	-15.00 / 15.00	540.70	540.76
Z	803+97.24	-15.00 / 15.00	540.68	540.74
AA	804+07.24	-15.00 / 15.00	540.66	540.72
BB	804+17.24	-15.00 / 15.00	540.64	540.69
CL Brg. N. Abut.	804+28.99	-15.00 / 15.00	540.61	540.63
CL Exp. Jt. N. Abut.	804+29.68	-15.00 / 15.00	540.61	540.63
Bk. N. Abut.	804+30.78	-15.00 / 15.00	540.61	540.63

Note:
SB offsets are from SB PGL and NB offsets are from NB PGL.

ROADWAY CROWN (SB & NB)

Location	Station	Offset SB / NB	Theoretical Grade Elevations	Theoretical Grade Elevations Adjusted For Dead Load Deflection and Grinding
CL Pier 4	801+00.57	-12.00 / 12.00	541.14	541.16
CL Exp. Jt. Pier 4	801+00.92	-12.00 / 12.00	541.14	541.16
CL Brg. Pier 4	801+01.82	-12.00 / 12.00	541.14	541.16
A	801+11.82	-12.00 / 12.00	541.13	541.17
B	801+21.82	-12.00 / 12.00	541.12	541.18
C	801+31.82	-12.00 / 12.00	541.11	541.18
D	801+41.82	-12.00 / 12.00	541.10	541.16
E	801+51.82	-12.00 / 12.00	541.09	541.14
F	801+61.82	-12.00 / 12.00	541.08	541.11
CL Pier 3	801+73.57	-12.00 / 12.00	541.07	541.09
G	801+83.57	-12.00 / 12.00	541.05	541.08
H	801+93.57	-12.00 / 12.00	541.04	541.09
I	802+03.57	-12.00 / 12.00	541.03	541.10
J	802+13.57	-12.00 / 12.00	541.02	541.10
K	802+23.57	-12.00 / 12.00	541.00	541.08
L	802+33.57	-12.00 / 12.00	540.99	541.06
M	802+43.57	-12.00 / 12.00	540.98	541.03
N	802+53.57	-12.00 / 12.00	540.96	540.99
CL Pier 2	802+65.40	-12.00 / 12.00	540.95	540.97
O	802+75.40	-12.00 / 12.00	540.93	540.96
P	802+85.40	-12.00 / 12.00	540.92	540.97
Q	802+95.40	-12.00 / 12.00	540.90	540.97
R	803+05.40	-12.00 / 12.00	540.89	540.97
S	803+15.40	-12.00 / 12.00	540.87	540.95
T	803+25.40	-12.00 / 12.00	540.85	540.92
U	803+35.40	-12.00 / 12.00	540.84	540.90
V	803+45.40	-12.00 / 12.00	540.82	540.86
CL Pier 1	803+57.24	-12.00 / 12.00	540.80	540.82
W	803+67.24	-12.00 / 12.00	540.78	540.81
X	803+77.24	-12.00 / 12.00	540.76	540.80
Y	803+87.24	-12.00 / 12.00	540.74	540.80
Z	803+97.24	-12.00 / 12.00	540.72	540.78
AA	804+07.24	-12.00 / 12.00	540.70	540.76
BB	804+17.24	-12.00 / 12.00	540.68	540.73
CL Brg. N. Abut.	804+28.99	-12.00 / 12.00	540.66	540.68
CL Exp. Jt. N. Abut.	804+29.68	-12.00 / 12.00	540.66	540.68
Bk. N. Abut.	804+30.78	-12.00 / 12.00	540.65	540.67

BEAM 7 & BEAM 14

Location	Station	Offset Beam 7 / Beam 14	Theoretical Grade Elevations	Theoretical Grade Elevations Adjusted For Dead Load Deflection and Grinding
CL Pier 4	801+00.57	-9.00 / 9.00	541.09	541.11
CL Exp. Jt. Pier 4	801+00.92	-9.00 / 9.00	541.09	541.11
CL Brg. Pier 4	801+01.82	-9.00 / 9.00	541.09	541.11
A	801+11.82	-9.00 / 9.00	541.08	541.12
B	801+21.82	-9.00 / 9.00	541.07	541.13
C	801+31.82	-9.00 / 9.00	541.06	541.13
D	801+41.82	-9.00 / 9.00	541.05	541.11
E	801+51.82	-9.00 / 9.00	541.04	541.09
F	801+61.82	-9.00 / 9.00	541.03	541.06
CL Pier 3	801+73.57	-9.00 / 9.00	541.02	541.04
G	801+83.57	-9.00 / 9.00	541.01	541.04
H	801+93.57	-9.00 / 9.00	541.00	541.05
I	802+03.57	-9.00 / 9.00	540.99	541.06
J	802+13.57	-9.00 / 9.00	540.97	541.05
K	802+23.57	-9.00 / 9.00	540.96	541.04
L	802+33.57	-9.00 / 9.00	540.95	541.02
M	802+43.57	-9.00 / 9.00	540.93	540.98
N	802+53.57	-9.00 / 9.00	540.92	540.95
CL Pier 2	802+65.40	-9.00 / 9.00	540.90	540.92
O	802+75.40	-9.00 / 9.00	540.89	540.92
P	802+85.40	-9.00 / 9.00	540.87	540.92
Q	802+95.40	-9.00 / 9.00	540.86	540.93
R	803+05.40	-9.00 / 9.00	540.84	540.92
S	803+15.40	-9.00 / 9.00	540.82	540.90
T	803+25.40	-9.00 / 9.00	540.81	540.88
U	803+35.40	-9.00 / 9.00	540.79	540.85
V	803+45.40	-9.00 / 9.00	540.77	540.81
CL Pier 1	803+57.24	-9.00 / 9.00	540.75	540.77
W	803+67.24	-9.00 / 9.00	540.73	540.76
X	803+77.24	-9.00 / 9.00	540.72	540.76
Y	803+87.24	-9.00 / 9.00	540.70	540.76
Z	803+97.24	-9.00 / 9.00	540.68	540.74
AA	804+07.24	-9.00 / 9.00	540.66	540.72
BB	804+17.24	-9.00 / 9.00	540.64	540.69
CL Brg. N. Abut.	804+28.99	-9.00 / 9.00	540.61	540.63
CL Exp. Jt. N. Abut.	804+29.68	-9.00 / 9.00	540.61	540.63
Bk. N. Abut.	804+30.78	-9.00 / 9.00	540.61	540.63

BEAM 8 & BEAM 13

Location	Station	Offset Beam 8 / Beam 13	Theoretical Grade Elevations	Theoretical Grade Elevations Adjusted For Dead Load Deflection and Grinding
CL Pier 4	801+00.57	-3.00 / 3.00	541.00	541.02
CL Exp. Jt. Pier 4	801+00.92	-3.00 / 3.00	541.00	541.02
CL Brg. Pier 4	801+01.82	-3.00 / 3.00	541.00	541.02
A	801+11.82	-3.00 / 3.00	540.99	541.03
B	801+21.82	-3.00 / 3.00	540.98	541.04
C	801+31.82	-3.00 / 3.00	540.97	541.04
D	801+41.82	-3.00 / 3.00	540.96	541.02
E	801+51.82	-3.00 / 3.00	540.95	541.00
F	801+61.82	-3.00 / 3.00	540.94	540.97
CL Pier 3	801+73.57	-3.00 / 3.00	540.93	540.95
G	801+83.57	-3.00 / 3.00	540.92	540.95
H	801+93.57	-3.00 / 3.00	540.91	540.96
I	802+03.57	-3.00 / 3.00	540.90	540.97
J	802+13.57	-3.00 / 3.00	540.88	540.96
K	802+23.57	-3.00 / 3.00	540.87	540.95
L	802+33.57	-3.00 / 3.00	540.86	540.93
M	802+43.57	-3.00 / 3.00	540.84	540.89
N	802+53.57	-3.00 / 3.00	540.83	540.86
CL Pier 2	802+65.40	-3.00 / 3.00	540.81	540.83
O	802+75.40	-3.00 / 3.00	540.80	540.83
P	802+85.40	-3.00 / 3.00	540.78	540.83
Q	802+95.40	-3.00 / 3.00	540.77	540.84
R	803+05.40	-3.00 / 3.00	540.75	540.83
S	803+15.40	-3.00 / 3.00	540.73	540.81
T	803+25.40	-3.00 / 3.00	540.72	540.79
U	803+35.40	-3.00 / 3.00	540.70	540.76
V	803+45.40	-3.00 / 3.00	540.68	540.72
CL Pier 1	803+57.24	-3.00 / 3.00	540.66	540.68
W	803+67.24	-3.00 / 3.00	540.64	540.67
X	803+77.24	-3.00 / 3.00	540.63	540.67
Y	803+87.24	-3.00 / 3.00	540.61	540.67
Z	803+97.24	-3.00 / 3.00	540.59	540.65
AA	804+07.24	-3.00 / 3.00	540.57	540.63
BB	804+17.24	-3.00 / 3.00	540.55	540.60
CL Brg. N. Abut.	804+28.99	-3.00 / 3.00	540.52	540.54
CL Exp. Jt. N. Abut.	804+29.68	-3.00 / 3.00	540.52	540.54
Bk. N. Abut.	804+30.78	-3.00 / 3.00	540.52	540.54

Note:
SB offsets are from SB PGL and NB offsets are from NB PGL.

SB PGL & NB PGL

Location	Station	Offset	Theoretical Grade Elevations	Theoretical Grade Elevations Adjusted For Dead Load Deflection and Grinding
CL Pier 4	801+00.57	0.00	540.96	540.98
CL Exp. Jt. Pier 4	801+00.92	0.00	540.96	540.98
CL Brg. Pier 4	801+01.82	0.00	540.96	540.98
A	801+11.82	0.00	540.95	540.99
B	801+21.82	0.00	540.94	541.00
C	801+31.82	0.00	540.93	541.00
D	801+41.82	0.00	540.92	540.98
E	801+51.82	0.00	540.91	540.96
F	801+61.82	0.00	540.90	540.93
CL Pier 3	801+73.57	0.00	540.89	540.91
G	801+83.57	0.00	540.87	540.90
H	801+93.57	0.00	540.86	540.91
I	802+03.57	0.00	540.85	540.92
J	802+13.57	0.00	540.84	540.92
K	802+23.57	0.00	540.82	540.90
L	802+33.57	0.00	540.81	540.88
M	802+43.57	0.00	540.80	540.85
N	802+53.57	0.00	540.78	540.81
CL Pier 2	802+65.40	0.00	540.77	540.79
O	802+75.40	0.00	540.75	540.78
P	802+85.40	0.00	540.74	540.79
Q	802+95.40	0.00	540.72	540.79
R	803+05.40	0.00	540.71	540.79
S	803+15.40	0.00	540.69	540.77
T	803+25.40	0.00	540.67	540.74
U	803+35.40	0.00	540.66	540.72
V	803+45.40	0.00	540.64	540.68
CL Pier 1	803+57.24	0.00	540.62	540.64
W	803+67.24	0.00	540.60	540.63
X	803+77.24	0.00	540.58	540.62
Y	803+87.24	0.00	540.56	540.62
Z	803+97.24	0.00	540.54	540.60
AA	804+07.24	0.00	540.52	540.58
BB	804+17.24	0.00	540.50	540.55
CL Brg. N. Abut.	804+28.99	0.00	540.48	540.50
CL Exp. Jt. N. Abut.	804+29.68	0.00	540.48	540.50
Bk. N. Abut.	804+30.78	0.00	540.47	540.49

BEAM 9 & BEAM 12

Location	Station	Offset Beam 9 / Beam 12	Theoretical Grade Elevations	Theoretical Grade Elevations Adjusted For Dead Load Deflection and Grinding
CL Pier 4	801+00.57	2.50 / -2.50	540.91	540.93
CL Exp. Jt. Pier 4	801+00.92	2.50 / -2.50	540.91	540.93
CL Brg. Pier 4	801+01.82	2.50 / -2.50	540.91	540.93
A	801+11.82	2.50 / -2.50	540.90	540.94
B	801+21.82	2.50 / -2.50	540.89	540.95
C	801+31.82	2.50 / -2.50	540.88	540.95
D	801+41.82	2.50 / -2.50	540.87	540.93
E	801+51.82	2.50 / -2.50	540.86	540.91
F	801+61.82	2.50 / -2.50	540.85	540.88
CL Pier 3	801+73.57	2.50 / -2.50	540.84	540.86
G	801+83.57	2.50 / -2.50	540.82	540.85
H	801+93.57	2.50 / -2.50	540.81	540.86
I	802+03.57	2.50 / -2.50	540.80	540.87
J	802+13.57	2.50 / -2.50	540.79	540.87
K	802+23.57	2.50 / -2.50	540.77	540.85
L	802+33.57	2.50 / -2.50	540.76	540.83
M	802+43.57	2.50 / -2.50	540.75	540.80
N	802+53.57	2.50 / -2.50	540.73	540.76
CL Pier 2	802+65.40	2.50 / -2.50	540.72	540.74
O	802+75.40	2.50 / -2.50	540.70	540.73
P	802+85.40	2.50 / -2.50	540.69	540.74
Q	802+95.40	2.50 / -2.50	540.67	540.74
R	803+05.40	2.50 / -2.50	540.66	540.74
S	803+15.40	2.50 / -2.50	540.64	540.72
T	803+25.40	2.50 / -2.50	540.62	540.69
U	803+35.40	2.50 / -2.50	540.61	540.67
V	803+45.40	2.50 / -2.50	540.59	540.63
CL Pier 1	803+57.24	2.50 / -2.50	540.57	540.59
W	803+67.24	2.50 / -2.50	540.55	540.58
X	803+77.24	2.50 / -2.50	540.53	540.57
Y	803+87.24	2.50 / -2.50	540.51	540.57
Z	803+97.24	2.50 / -2.50	540.49	540.55
AA	804+07.24	2.50 / -2.50	540.47	540.53
BB	804+17.24	2.50 / -2.50	540.45	540.50
CL Brg. N. Abut.	804+28.99	2.50 / -2.50	540.43	540.45
CL Exp. Jt. N. Abut.	804+29.68	2.50 / -2.50	540.43	540.45
Bk. N. Abut.	804+30.78	2.50 / -2.50	540.42	540.44

BEAM 10 & BEAM 11

Location	Station	Offset Beam 10 / Beam 11	Theoretical Grade Elevations	Theoretical Grade Elevations Adjusted For Dead Load Deflection and Grinding
CL Pier 4	801+00.57	8.00 / -8.00	540.80	540.82
CL Exp. Jt. Pier 4	801+00.92	8.00 / -8.00	540.80	540.82
CL Brg. Pier 4	801+01.82	8.00 / -8.00	540.80	540.82
A	801+11.82	8.00 / -8.00	540.79	540.83
B	801+21.82	8.00 / -8.00	540.78	540.84
C	801+31.82	8.00 / -8.00	540.77	540.84
D	801+41.82	8.00 / -8.00	540.76	540.82
E	801+51.82	8.00 / -8.00	540.75	540.80
F	801+61.82	8.00 / -8.00	540.74	540.77
CL Pier 3	801+73.57	8.00 / -8.00	540.73	540.75
G	801+83.57	8.00 / -8.00	540.71	540.74
H	801+93.57	8.00 / -8.00	540.70	540.75
I	802+03.57	8.00 / -8.00	540.69	540.76
J	802+13.57	8.00 / -8.00	540.68	540.76
K	802+23.57	8.00 / -8.00	540.66	540.74
L	802+33.57	8.00 / -8.00	540.65	540.72
M	802+43.57	8.00 / -8.00	540.64	540.69
N	802+53.57	8.00 / -8.00	540.62	540.65
CL Pier 2	802+65.40	8.00 / -8.00	540.61	540.63
O	802+75.40	8.00 / -8.00	540.59	540.62
P	802+85.40	8.00 / -8.00	540.58	540.63
Q	802+95.40	8.00 / -8.00	540.56	540.63
R	803+05.40	8.00 / -8.00	540.55	540.63
S	803+15.40	8.00 / -8.00	540.53	540.61
T	803+25.40	8.00 / -8.00	540.51	540.58
U	803+35.40	8.00 / -8.00	540.50	540.56
V	803+45.40	8.00 / -8.00	540.48	540.52
CL Pier 1	803+57.24	8.00 / -8.00	540.46	540.48
W	803+67.24	8.00 / -8.00	540.44	540.47
X	803+77.24	8.00 / -8.00	540.42	540.46
Y	803+87.24	8.00 / -8.00	540.40	540.46
Z	803+97.24	8.00 / -8.00	540.38	540.44
AA	804+07.24	8.00 / -8.00	540.36	540.42
BB	804+17.24	8.00 / -8.00	540.34	540.39
CL Brg. N. Abut.	804+28.99	8.00 / -8.00	540.32	540.34
CL Exp. Jt. N. Abut.	804+29.68	8.00 / -8.00	540.32	540.34
Bk. N. Abut.	804+30.78	8.00 / -8.00	540.31	540.33

Note:
SB offsets are from SB PGL and NB offsets are from NB PGL.

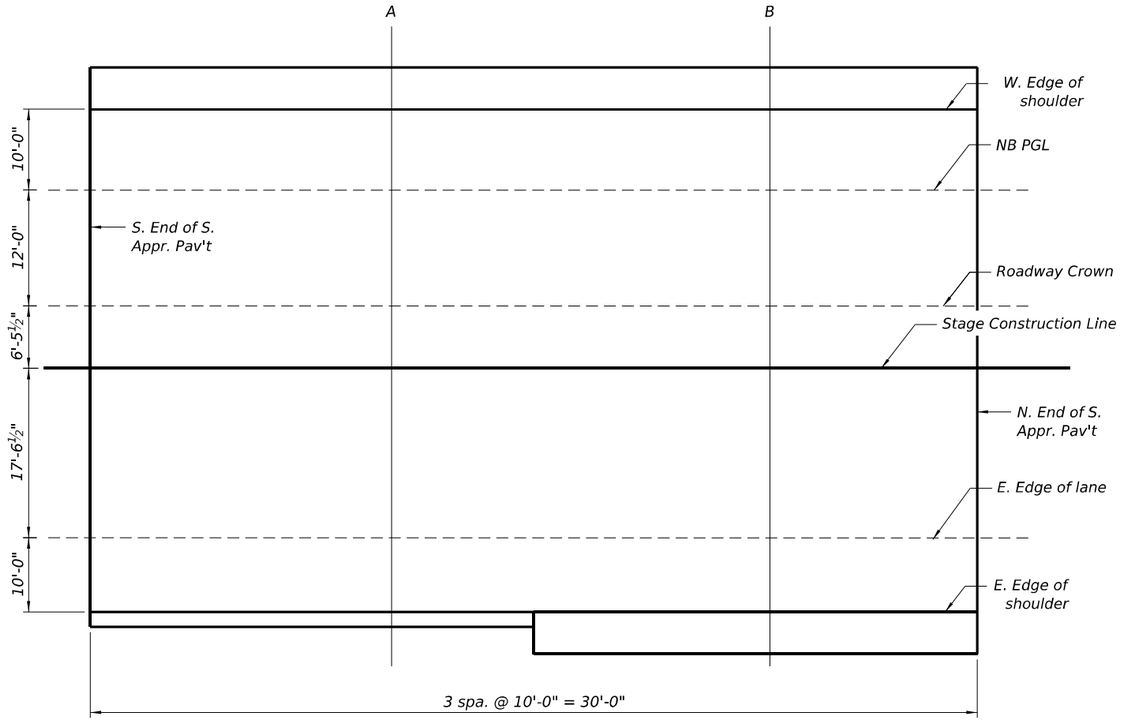

SOUTH APPROACH SLAB PLAN

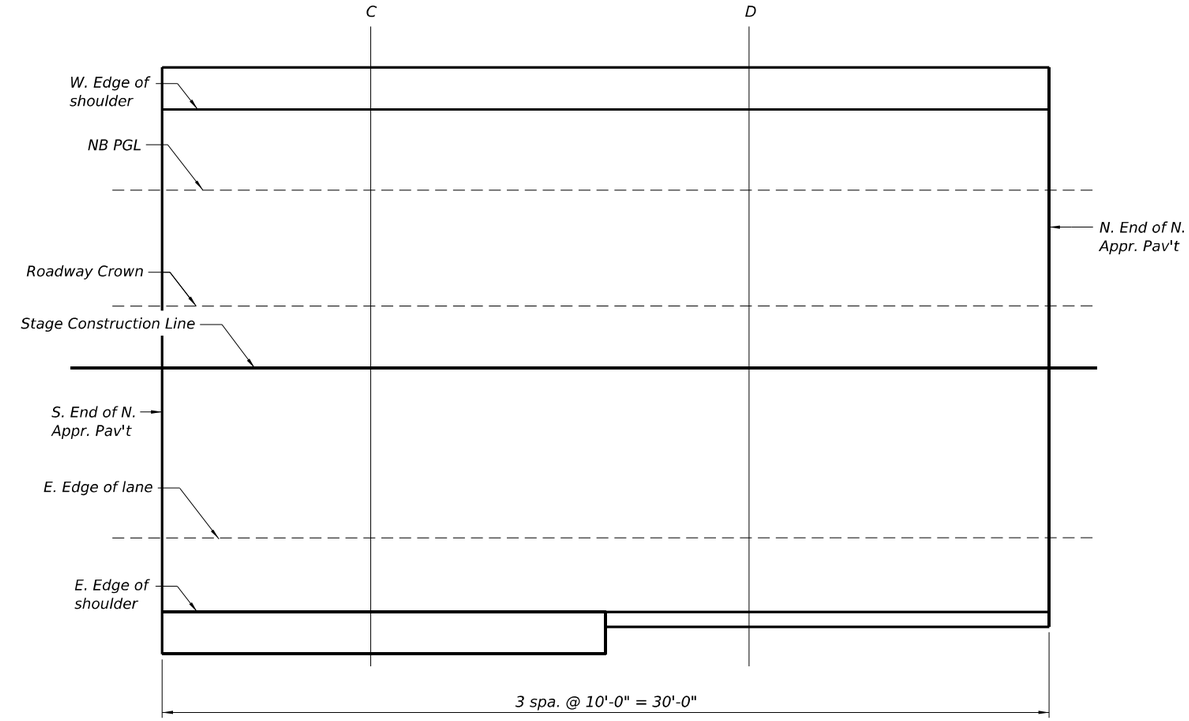

NORTH APPROACH SLAB PLAN

N

W. EDGE OF SHOULDER

Location	Sta.	Offset (ft)	Theoretical Grade Elevation	Theoretical Grade Elevation Adjusted For Grinding
S. End S. Appr. Slab	792+75.78	-10.00	540.22	540.24
A	792+85.78	-10.00	540.24	540.26
B	792+95.78	-10.00	540.27	540.29
N. End S. Appr. Slab	793+05.78	-10.00	540.29	540.31

STAGE CONSTRUCTION LINE

Location	Sta.	Offset (ft)	Theoretical Grade Elevation	Theoretical Grade Elevation Adjusted For Grinding
S. End S. Appr. Slab	792+75.78	18.46	540.51	540.53
A	792+85.78	18.46	540.53	540.55
B	792+95.78	18.46	540.55	540.57
N. End S. Appr. Slab	793+05.78	18.46	540.57	540.59

W. EDGE OF SHOULDER

Location	Sta.	Offset (ft)	Theoretical Grade Elevation	Theoretical Grade Elevation Adjusted For Grinding
S. End N. Appr. Slab	804+30.78	-10.00	540.27	540.29
C	804+40.78	-10.00	540.25	540.27
D	804+50.78	-10.00	540.23	540.25
N. End N. Appr. Slab	804+60.78	-10.00	540.21	540.23

STAGE CONSTRUCTION LINE

Location	Sta.	Offset (ft)	Theoretical Grade Elevation	Theoretical Grade Elevation Adjusted For Grinding
S. End N. Appr. Slab	804+30.78	18.46	540.56	540.58
C	804+40.78	18.46	540.54	540.56
D	804+50.78	18.46	540.52	540.54
N. End N. Appr. Slab	804+60.78	18.46	540.49	540.51

NB PGL

Location	Sta.	Offset (ft)	Theoretical Grade Elevation	Theoretical Grade Elevation Adjusted For Grinding
S. End S. Appr. Slab	792+75.78	0.00	540.42	540.44
A	792+85.78	0.00	540.44	540.46
B	792+95.78	0.00	540.47	540.49
N. End S. Appr. Slab	793+05.78	0.00	540.49	540.51

E. EDGE OF LANE

Location	Sta.	Offset (ft)	Theoretical Grade Elevation	Theoretical Grade Elevation Adjusted For Grinding
S. End S. Appr. Slab	792+75.78	36.00	540.24	540.26
A	792+85.78	36.00	540.26	540.28
B	792+95.78	36.00	540.29	540.31
N. End S. Appr. Slab	793+05.78	36.00	540.31	540.33

NB PGL

Location	Sta.	Offset (ft)	Theoretical Grade Elevation	Theoretical Grade Elevation Adjusted For Grinding
S. End N. Appr. Slab	804+30.78	0.00	540.47	540.49
C	804+40.78	0.00	540.45	540.47
D	804+50.78	0.00	540.43	540.45
N. End N. Appr. Slab	804+60.78	0.00	540.41	540.43

E. EDGE OF LANE

Location	Sta.	Offset (ft)	Theoretical Grade Elevation	Theoretical Grade Elevation Adjusted For Grinding
S. End N. Appr. Slab	804+30.78	36.00	540.29	540.31
C	804+40.78	36.00	540.27	540.29
D	804+50.78	36.00	540.25	540.27
N. End N. Appr. Slab	804+60.78	36.00	540.23	540.25

ROADWAY CROWN

Location	Sta.	Offset (ft)	Theoretical Grade Elevation	Theoretical Grade Elevation Adjusted For Grinding
S. End S. Appr. Slab	792+75.78	12.00	540.60	540.62
A	792+85.78	12.00	540.62	540.64
B	792+95.78	12.00	540.65	540.67
N. End S. Appr. Slab	793+05.78	12.00	540.67	540.69

E. EDGE OF SHOULDER

Location	Sta.	Offset (ft)	Theoretical Grade Elevation	Theoretical Grade Elevation Adjusted For Grinding
S. End S. Appr. Slab	792+75.78	46.00	540.04	540.06
A	792+85.78	46.00	540.06	540.08
B	792+95.78	46.00	540.09	540.11
N. End S. Appr. Slab	793+05.78	46.00	540.11	540.13

ROADWAY CROWN

Location	Sta.	Offset (ft)	Theoretical Grade Elevation	Theoretical Grade Elevation Adjusted For Grinding
S. End N. Appr. Slab	804+30.78	12.00	540.65	540.67
C	804+40.78	12.00	540.63	540.65
D	804+50.78	12.00	540.61	540.63
N. End N. Appr. Slab	804+60.78	12.00	540.59	540.61

E. EDGE OF SHOULDER

Location	Sta.	Offset (ft)	Theoretical Grade Elevation	Theoretical Grade Elevation Adjusted For Grinding
S. End N. Appr. Slab	804+30.78	46.00	540.09	540.11
C	804+40.78	46.00	540.07	540.09
D	804+50.78	46.00	540.05	540.07
N. End N. Appr. Slab	804+60.78	46.00	540.03	540.05

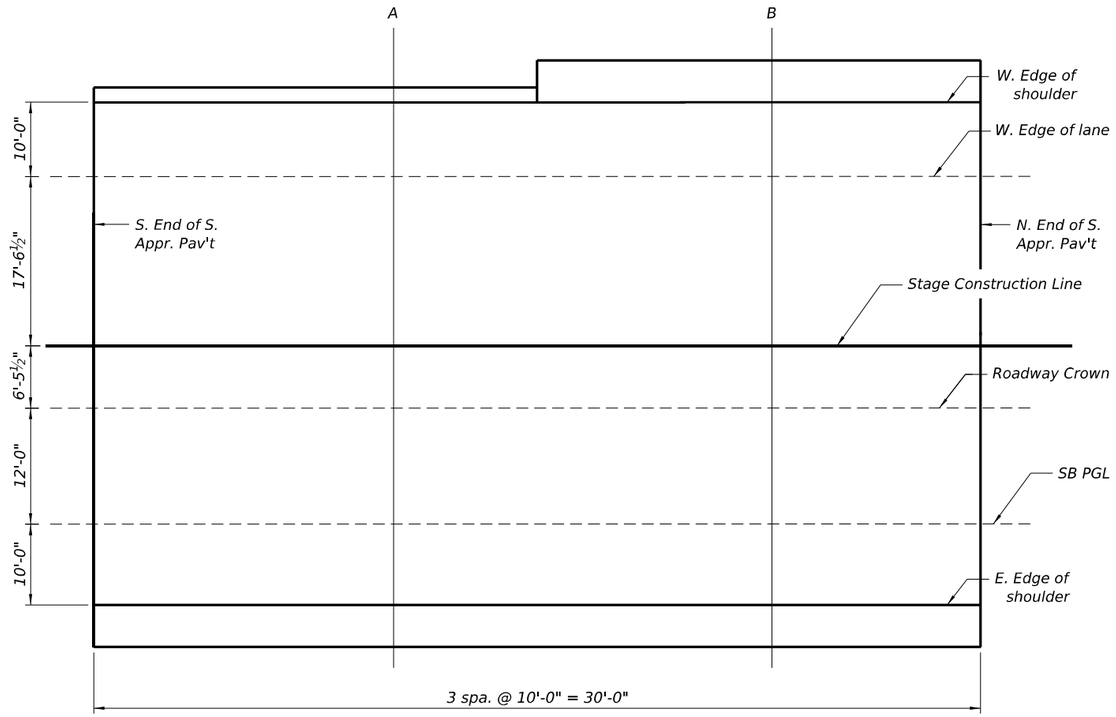

SOUTH APPROACH SLAB PLAN

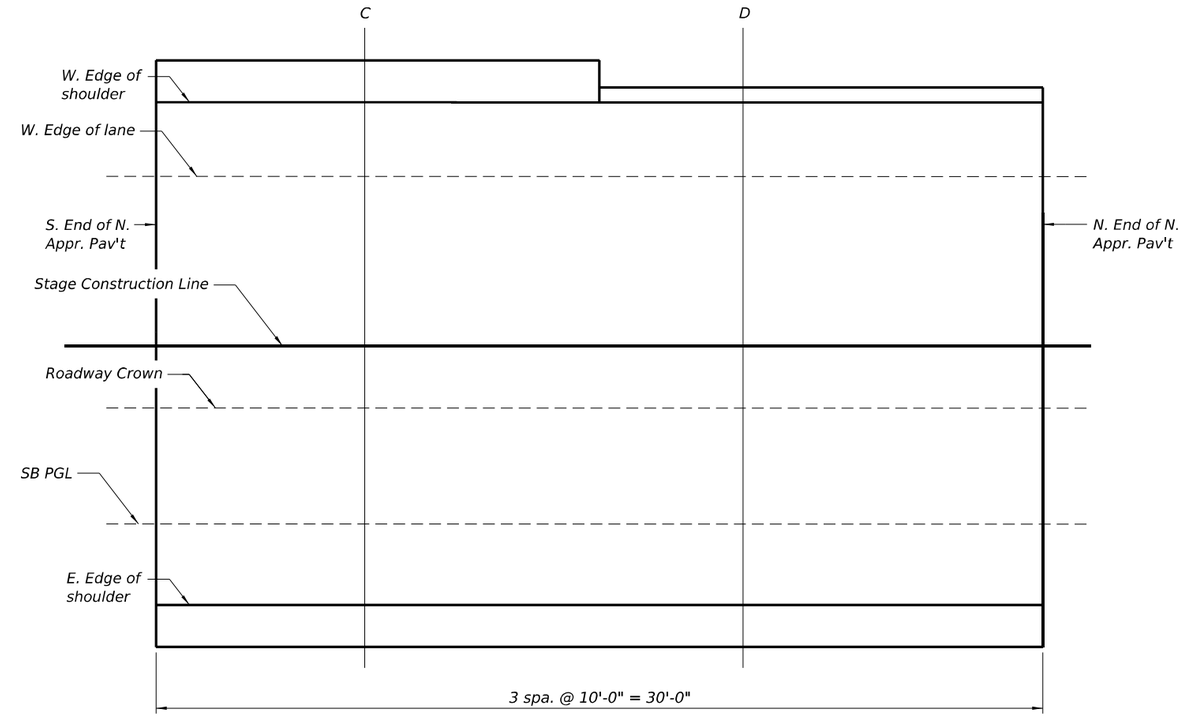

NORTH APPROACH SLAB PLAN

N

W. EDGE OF SHOULDER

Location	Sta.	Offset (ft)	Theoretical Grade Elevation	Theoretical Grade Elevation Adjusted For Grinding
S. End S. Appr. Slab	792+75.78	-46.00	540.04	540.06
A	792+85.78	-46.00	540.06	540.08
B	792+95.78	-46.00	540.09	540.11
N. End S. Appr. Slab	793+05.78	-46.00	540.11	540.13

ROADWAY CROWN

Location	Sta.	Offset (ft)	Theoretical Grade Elevation	Theoretical Grade Elevation Adjusted For Grinding
S. End S. Appr. Slab	792+75.78	-12.00	540.60	540.62
A	792+85.78	-12.00	540.62	540.64
B	792+95.78	-12.00	540.65	540.67
N. End S. Appr. Slab	793+05.78	-12.00	540.67	540.69

W. EDGE OF SHOULDER

Location	Sta.	Offset (ft)	Theoretical Grade Elevation	Theoretical Grade Elevation Adjusted For Grinding
S. End N. Appr. Slab	804+30.78	-46.00	540.09	540.11
C	804+40.78	-46.00	540.07	540.09
D	804+50.78	-46.00	540.05	540.07
N. End N. Appr. Slab	804+60.78	-46.00	540.03	540.05

ROADWAY CROWN

Location	Sta.	Offset (ft)	Theoretical Grade Elevation	Theoretical Grade Elevation Adjusted For Grinding
S. End N. Appr. Slab	804+30.78	-12.00	540.65	540.67
C	804+40.78	-12.00	540.63	540.65
D	804+50.78	-12.00	540.61	540.63
N. End N. Appr. Slab	804+60.78	-12.00	540.59	540.61

W. EDGE OF LANE

Location	Sta.	Offset (ft)	Theoretical Grade Elevation	Theoretical Grade Elevation Adjusted For Grinding
S. End S. Appr. Slab	792+75.78	-36.00	540.24	540.26
A	792+85.78	-36.00	540.26	540.28
B	792+95.78	-36.00	540.29	540.31
N. End S. Appr. Slab	793+05.78	-36.00	540.31	540.33

SB PGL

Location	Sta.	Offset (ft)	Theoretical Grade Elevation	Theoretical Grade Elevation Adjusted For Grinding
S. End S. Appr. Slab	792+75.78	0.00	540.42	540.44
A	792+85.78	0.00	540.44	540.46
B	792+95.78	0.00	540.47	540.49
N. End S. Appr. Slab	793+05.78	0.00	540.49	540.51

W. EDGE OF LANE

Location	Sta.	Offset (ft)	Theoretical Grade Elevation	Theoretical Grade Elevation Adjusted For Grinding
S. End N. Appr. Slab	804+30.78	-36.00	540.29	540.31
C	804+40.78	-36.00	540.27	540.29
D	804+50.78	-36.00	540.25	540.27
N. End N. Appr. Slab	804+60.78	-36.00	540.23	540.25

SB PGL

Location	Sta.	Offset (ft)	Theoretical Grade Elevation	Theoretical Grade Elevation Adjusted For Grinding
S. End N. Appr. Slab	804+30.78	0.00	540.47	540.49
C	804+40.78	0.00	540.45	540.47
D	804+50.78	0.00	540.43	540.45
N. End N. Appr. Slab	804+60.78	0.00	540.41	540.43

STAGE CONSTRUCTION LINE

Location	Sta.	Offset (ft)	Theoretical Grade Elevation	Theoretical Grade Elevation Adjusted For Grinding
S. End S. Appr. Slab	792+75.78	-18.46	540.51	540.53
A	792+85.78	-18.46	540.53	540.55
B	792+95.78	-18.46	540.55	540.57
N. End S. Appr. Slab	793+05.78	-18.46	540.57	540.59

E. EDGE OF SHOULDER

Location	Sta.	Offset (ft)	Theoretical Grade Elevation	Theoretical Grade Elevation Adjusted For Grinding
S. End S. Appr. Slab	792+75.78	10.00	540.22	540.24
A	792+85.78	10.00	540.24	540.26
B	792+95.78	10.00	540.27	540.29
N. End S. Appr. Slab	793+05.78	10.00	540.29	540.31

STAGE CONSTRUCTION LINE

Location	Sta.	Offset (ft)	Theoretical Grade Elevation	Theoretical Grade Elevation Adjusted For Grinding
S. End N. Appr. Slab	804+30.78	-18.46	540.56	540.58
C	804+40.78	-18.46	540.54	540.56
D	804+50.78	-18.46	540.52	540.54
N. End N. Appr. Slab	804+60.78	-18.46	540.49	540.51

E. EDGE OF SHOULDER

Location	Sta.	Offset (ft)	Theoretical Grade Elevation	Theoretical Grade Elevation Adjusted For Grinding
S. End N. Appr. Slab	804+30.78	10.00	540.27	540.29
C	804+40.78	10.00	540.25	540.27
D	804+50.78	10.00	540.23	540.25
N. End N. Appr. Slab	804+60.78	10.00	540.21	540.23

FILE NAME: pw://cmtengi-pw.bentley.com:cmtc-connect-projects/Documents/IDOT/21004103-00/410300/Bridge/Sangamon River Bridges/CADD_Sheets/0840018 & 0840019-72K98-022-SB Bridge Approach Slab Elevations

CMT
License No. 184-000613

USER NAME = bholland	DESIGNED - VT	REVISED -	
	DRAWN - VT	REVISED -	
PLOT SCALE = N/A	CHECKED - DH	REVISED -	
PLOT DATE = 3/21/2024	DATE - MARCH 2024	REVISED -	

STATE OF ILLINOIS
DEPARTMENT OF TRANSPORTATION

SB BRIDGE APPROACH SLAB ELEVATIONS
STRUCTURE NO. 084-0018 (NB) & 084-0019 (SB)

SCALE: | SHEET 22 OF 67 SHEETS | STA. | TO STA.

F.A.I. RTE.	SECTION	COUNTY	TOTAL SHEETS	SHEET NO.
55	(84-2BR-1)D,BY,BP,BRR	SANGAMON	139	64
		CONTRACT NO. 72K98		
		ILLINOIS	FED. AID PROJECT	

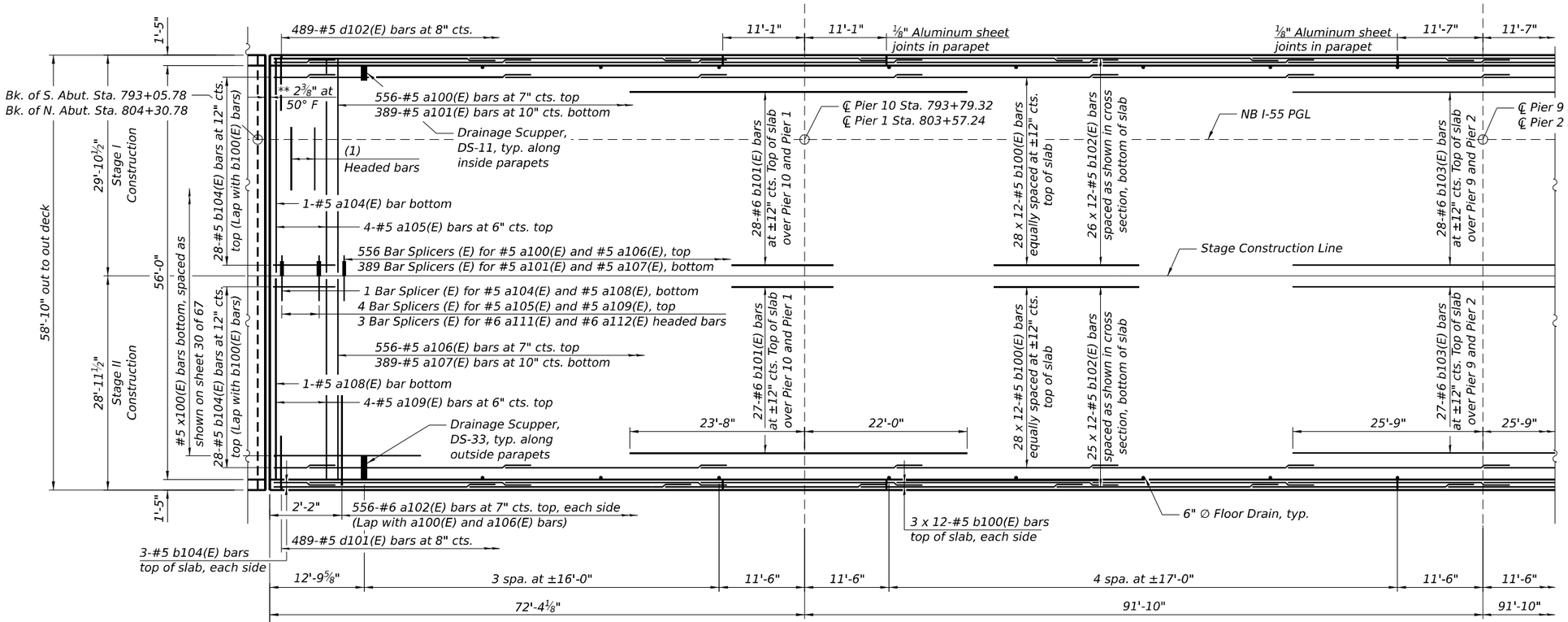

(1) 3-#6 a103(E) bars at 6" cts., bottom between beams unless noted otherwise
3-#6 a110(E) bars at 6" cts., bottom between Beams 11 & 12, and 12 & 13 for the NB bridge, and Beams 8 & 9, and 9 & 10 for the SB bridge.
3-#6 a111(E) bars at 6" cts., bottom between Stage Construction Line and Beam 15 for the NB bridge, and Beam 6 and Stage Construction Line for the SB bridge.
3-#6 a112(E) bars at 6" cts., bottom between Beam 16 and Stage Construction Line for the NB bridge, and Beam 5 and Stage Construction Line for the SB bridge.

UNITS 1 AND 3 PARTIAL PLAN

(NB bridge shown, SB bridge similar)
(NB Unit 3 shown in mirrored view about the east-west line)

MINIMUM BAR LAP

#5 bar = 3'-6"
#6 bar = 3'-7"

Notes:
1. See sheets 27 thru 30 of 67 for superstructure details and Bill of Material.
2. Bars indicated thus 28 x 12-#5 etc. indicates 28 lines of bars with 12 lengths per line.
3. See sheets 41 and 43 of 67 for beam numbering on NB and SB bridges.

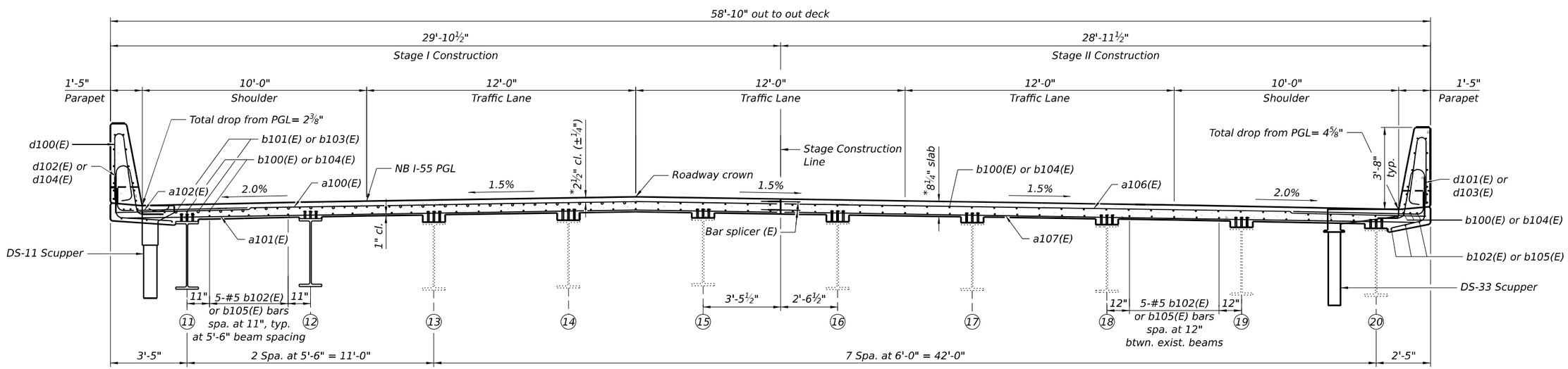

UNITS 1 AND 3 CROSS SECTION

(Looking North)
(NB bridge shown, SB bridge similar)

* Prior to grinding
** Dimension showing concrete opening. For joint opening see sheet 36 of 67.

FILE NAME: pw://cmtengi-pw.bentley.com:cmt-connect-projects/Documents/IDOT/21094103-00/410300/Bridge/Sangamon River Bridges/CADD_Sheets/0840018 & 0840015-72K98-023-Superstructure - I

CMT
License No. 184-000613
© Copyright CMT, Inc.

USER NAME = bholland	DESIGNED - BLH	REVISED -	
	DRAWN - BLH	REVISED -	
PLOT SCALE = N/A	CHECKED - DH	REVISED -	
PLOT DATE = 3/21/2024	DATE - MARCH 2024	REVISED -	

STATE OF ILLINOIS
DEPARTMENT OF TRANSPORTATION

SUPERSTRUCTURE - I
STRUCTURE NO. 084-0018 (NB) & 084-0019 (SB)

SCALE: | SHEET 23 OF 67 SHEETS | STA. | TO STA.

F.A.I. RTE.	SECTION	COUNTY	TOTAL SHEETS	SHEET NO.
55	(84-2BR-1)D,BY,BP,BRR	SANGAMON	139	65
		CONTRACT NO. 72K98		
	ILLINOIS	FED. AID PROJECT		

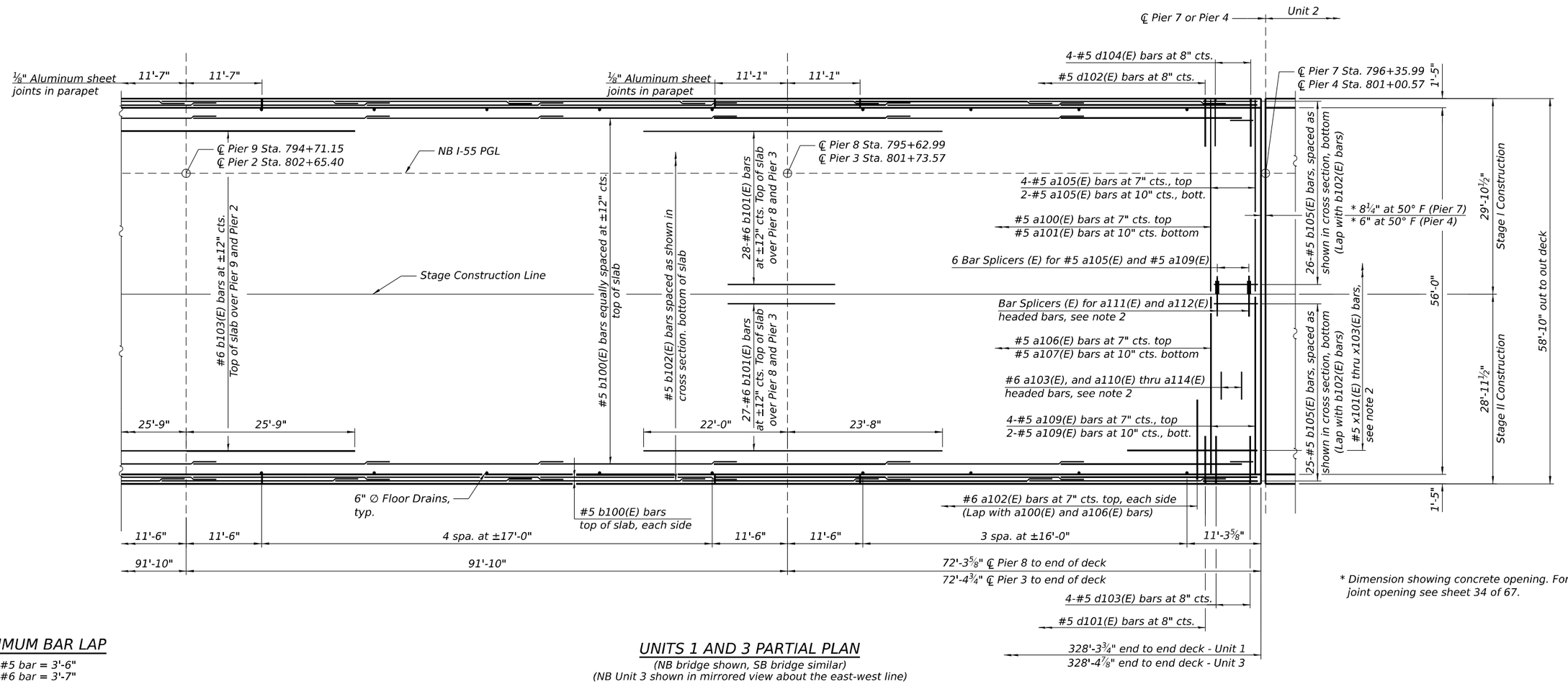

* Dimension showing concrete opening. For joint opening see sheet 34 of 67.

MINIMUM BAR LAP

#5 bar = 3'-6"
#6 bar = 3'-7"

UNITS 1 AND 3 PARTIAL PLAN

(NB bridge shown, SB bridge similar)
(NB Unit 3 shown in mirrored view about the east-west line)

Notes:
1. See sheets 27 thru 30 of 67 for superstructure details and Bill of Material.
2. See sheet 32 of 67 for billing and location of a103(E) bars, a110(E) thru a114(E) bars, bar splicers, and x101(E) thru x103(E) bars at modular joint.

FILE NAME: pw://cmtengi-pw.bentley.com:cmt-connect-projects/Documents/IDOT/21094103-00/410300/Bridge/Sangamon River Bridges/CADD_Sheets/0840018 & 0840019-72K98-024-Superstructure - II

CMT
License No. 184-000813 © Copyright CMT, Inc.

USER NAME = bholland	DESIGNED - BLH	REVISED -	
	DRAWN - BLH	REVISED -	
PLOT SCALE = N/A	CHECKED - DH	REVISED -	
PLOT DATE = 3/21/2024	DATE - MARCH 2024	REVISED -	

STATE OF ILLINOIS
DEPARTMENT OF TRANSPORTATION

SUPERSTRUCTURE - II
STRUCTURE NO. 084-0018 (NB) & 084-0019 (SB)

SCALE: | SHEET 24 OF 67 SHEETS | STA. | TO STA.

F.A.I. RTE.	SECTION	COUNTY	TOTAL SHEETS	SHEET NO.
55	(84-2BR-1)D,BY,BP,BRR	SANGAMON	139	66
		CONTRACT NO.	72K98	
		ILLINOIS	FED. AID PROJECT	

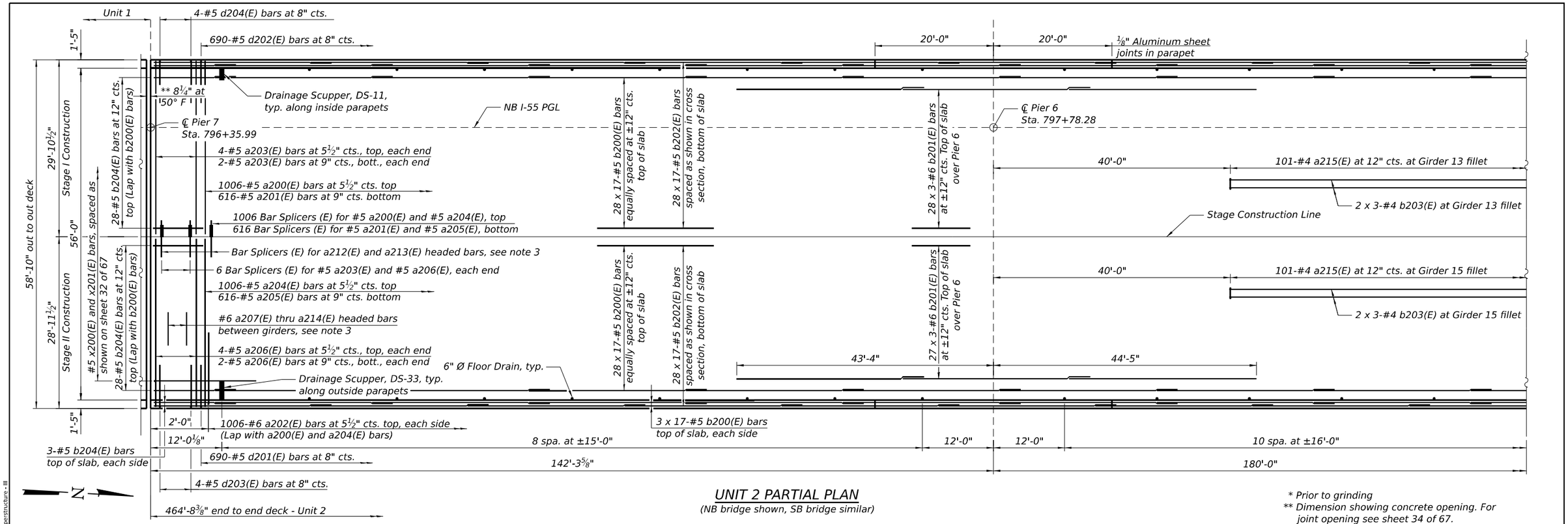

UNIT 2 PARTIAL PLAN

(NB bridge shown, SB bridge similar)

* Prior to grinding

** Dimension showing concrete opening. For joint opening see sheet 34 of 67.

MINIMUM BAR LAP

#4 bar = 2'-7"
#5 bar = 3'-6"
#6 bar = 3'-7"

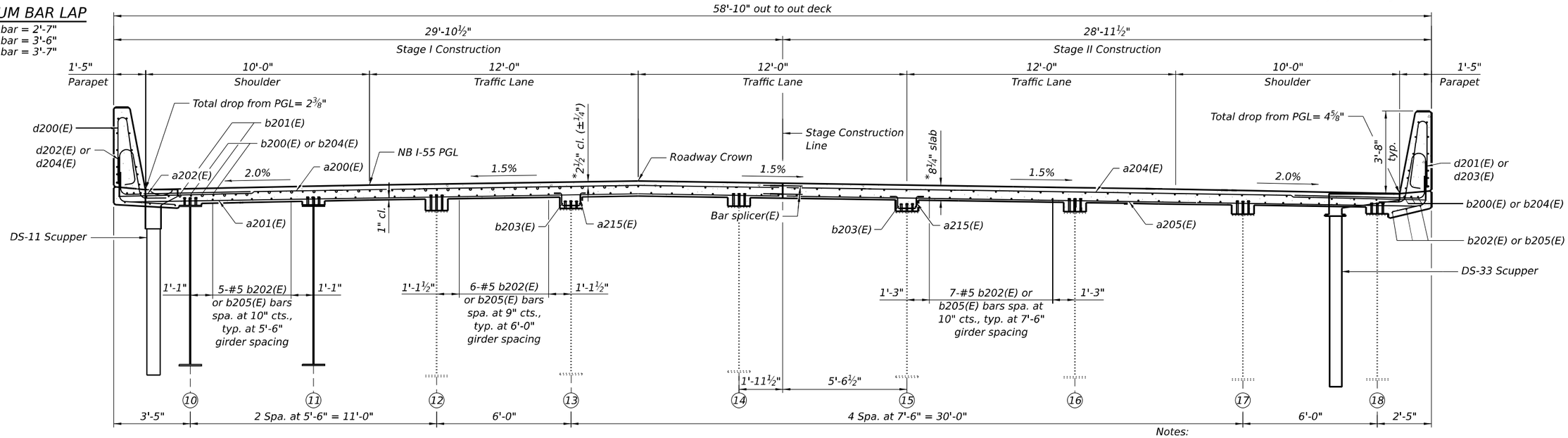

NEAR PIER

UNIT 2 CROSS SECTION

(Looking North)
(NB bridge shown, SB bridge similar)

NEAR MIDSPAN

Notes:
1. See sheets 27 thru 30 of 67 for superstructure details and Bill of Material.
2. Bars indicated thus 28 x 17-#5 etc. indicates 28 lines of bars with 17 lengths per line.
3. See sheet 32 of 67 for billing and location of a207(E) thru a214(E), x200(E), x201(E), and bar splicers at modular joint.
4. See sheet 42 of 67 for girder numbering on NB and SB bridges.

CMT License No. 184-000813 © Copyright CMT, Inc.	USER NAME = bholland	DESIGNED - BLH	REVISED -	STATE OF ILLINOIS DEPARTMENT OF TRANSPORTATION	SUPERSTRUCTURE - III STRUCTURE NO. 084-0018 (NB) & 084-0019 (SB)
		DRAWN - BLH	REVISED -		
	PLOT SCALE = N/A	CHECKED - DH	REVISED -		
	PLOT DATE = 3/21/2024	DATE - MARCH 2024	REVISED -		SCALE: SHEET 25 OF 67 SHEETS STA. TO STA.

F.A.I. RTE.	SECTION	COUNTY	TOTAL SHEETS	SHEET NO.
55	(84-2BR-1)D,BY,BP,BRR	SANGAMON	139	67
		CONTRACT NO.	72K98	
		ILLINOIS	FED. AID PROJECT	

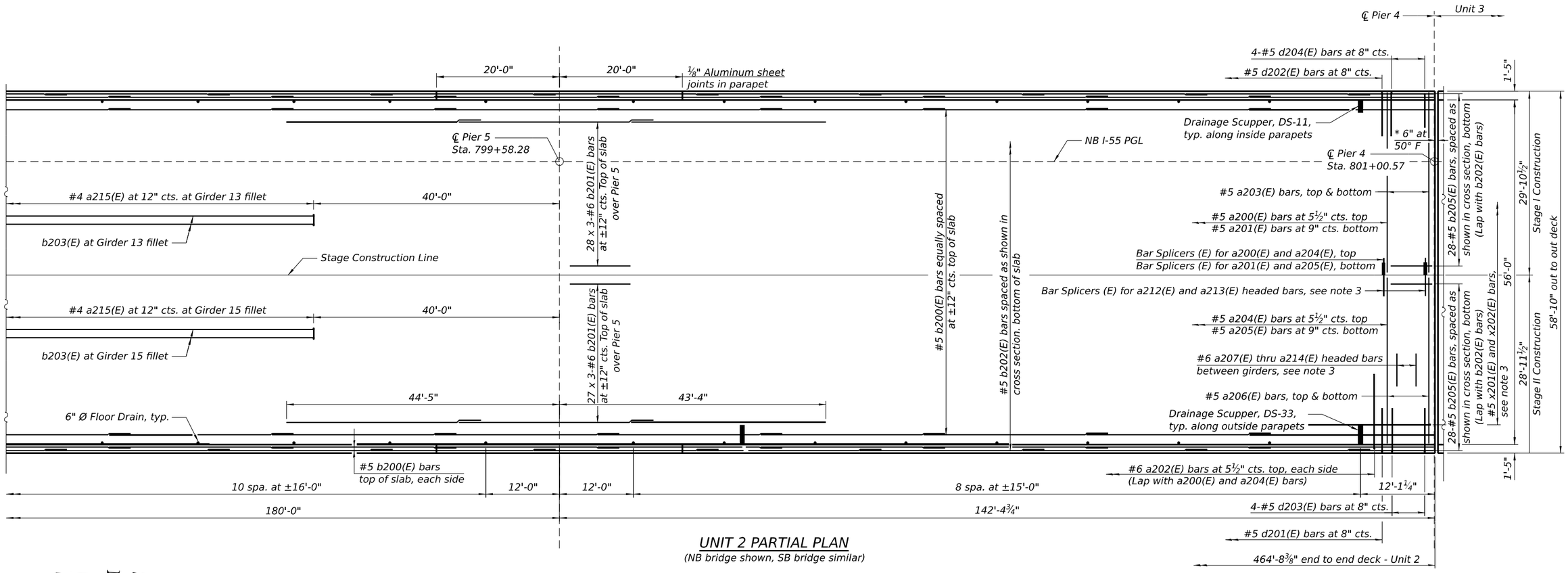

UNIT 2 PARTIAL PLAN

(NB bridge shown, SB bridge similar)

N

MINIMUM BAR LAP

#4 bar = 2'-7"
#5 bar = 3'-6"
#6 bar = 3'-7"

* Dimension showing concrete opening. For joint opening see sheet 34 of 67.

Notes:
1. See sheets 27 thru 30 of 67 for superstructure details and Bill of Material.
2. Bars indicated thus 28 x 3-#6 etc. indicates 28 lines of bars with 3 lengths per line.
3. See sheet 32 of 67 for billing and location of a207(E) thru a214(E), x201(E), x202(E), and bar splicers at modular joint.

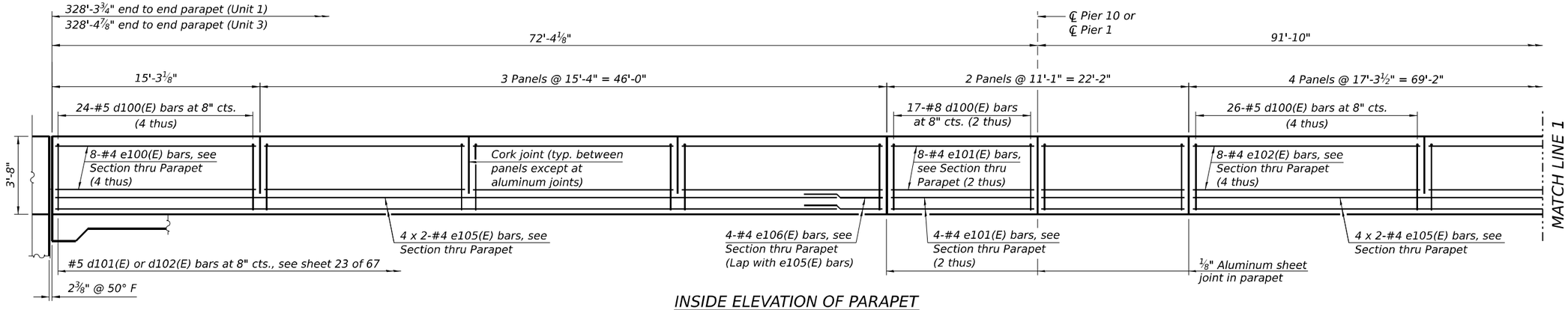

INSIDE ELEVATION OF PARAPET

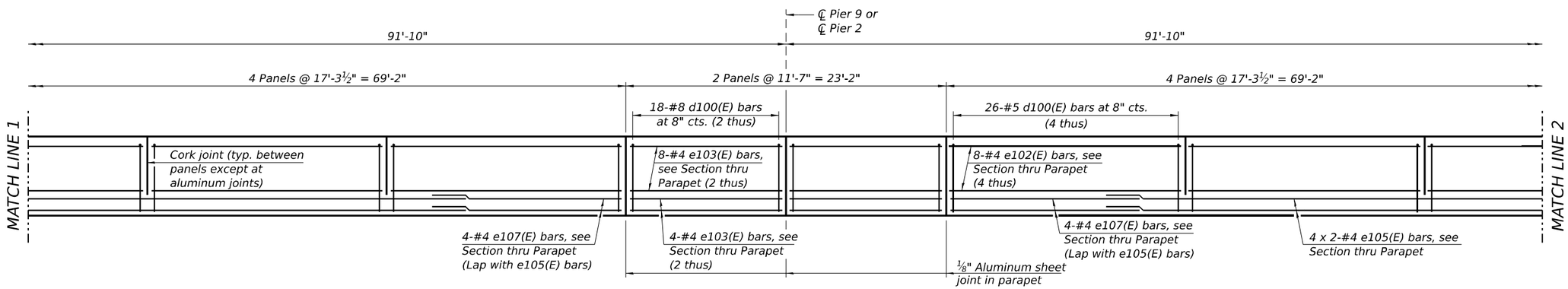

INSIDE ELEVATION OF PARAPET

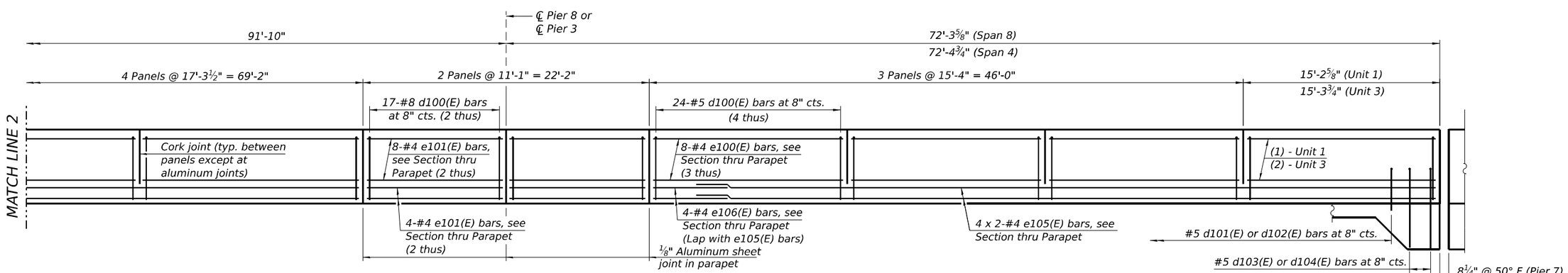

MINIMUM BAR LAP:

#4 bar = 2'-5"

INSIDE ELEVATION OF PARAPET

(1) 8-#4 e104(E) bars, see
Section thru Parapet
(2) 8-#4 e100(E) bars, see
Section thru Parapet

Notes:
1. See sheet 29 of 67 for section thru parapet.
2. Bars indicated thus 4 x 2-#4 etc. indicates 4 lines of bars with 2 lengths per line.
3. See sheets 32 thru 34 of 67 for modular joint details.

FILE NAME: pw://cmtengp-pw.bentley.com:cmt-connect-projects/Documents/IDOT/21004103-00410300/Bridge/Sangamon River Bridges/CADD_Sheets/0840018 & 0840015-72K98-427-Superstructure Details - I

CMT
License No. 184-002613

USER NAME = bholland	DESIGNED - BLH	REVISED -	
	DRAWN - BLH	REVISED -	
PLOT SCALE = N/A	CHECKED - DH	REVISED -	
PLOT DATE = 3/21/2024	DATE - MARCH 2024	REVISED -	

STATE OF ILLINOIS
DEPARTMENT OF TRANSPORTATION

SUPERSTRUCTURE DETAILS - I
STRUCTURE NO. 084-0018 (NB) & 084-0019 (SB)

SCALE: | SHEET 27 OF 67 SHEETS | STA. | TO STA.

F.A.I. RTE.	SECTION	COUNTY	TOTAL SHEETS	SHEET NO.
55	(84-2BR-1)D,BY,BP,BRR	SANGAMON	139	69
		CONTRACT NO. 72K98		
		ILLINOIS FED. AID PROJECT		

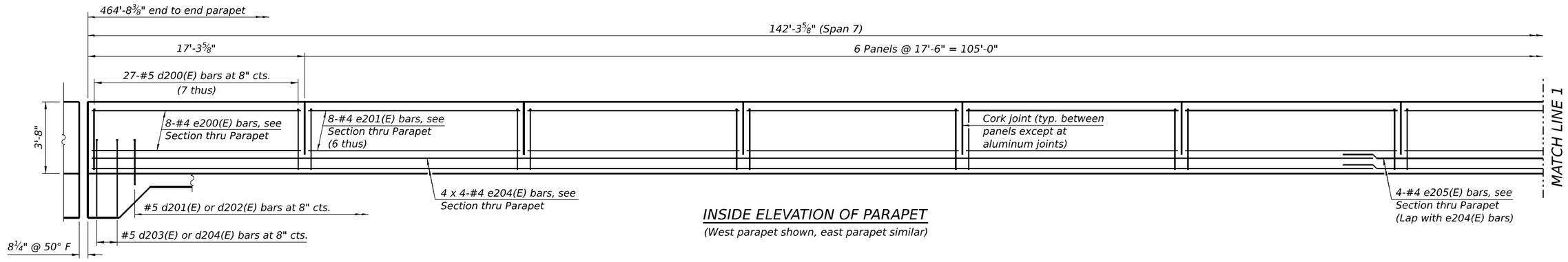

INSIDE ELEVATION OF PARAPET

(West parapet shown, east parapet similar)

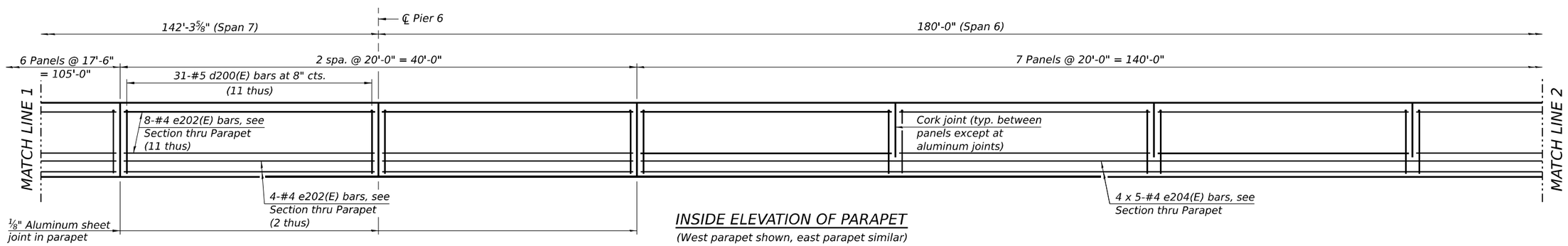

INSIDE ELEVATION OF PARAPET

(West parapet shown, east parapet similar)

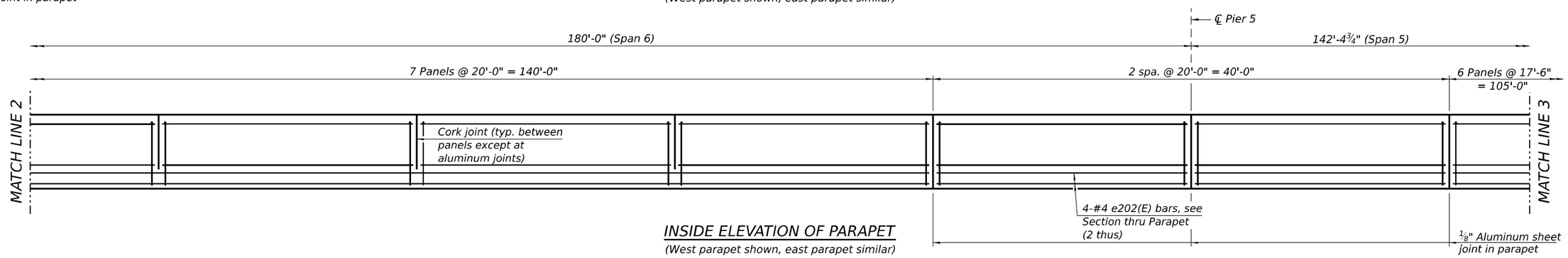

INSIDE ELEVATION OF PARAPET

(West parapet shown, east parapet similar)

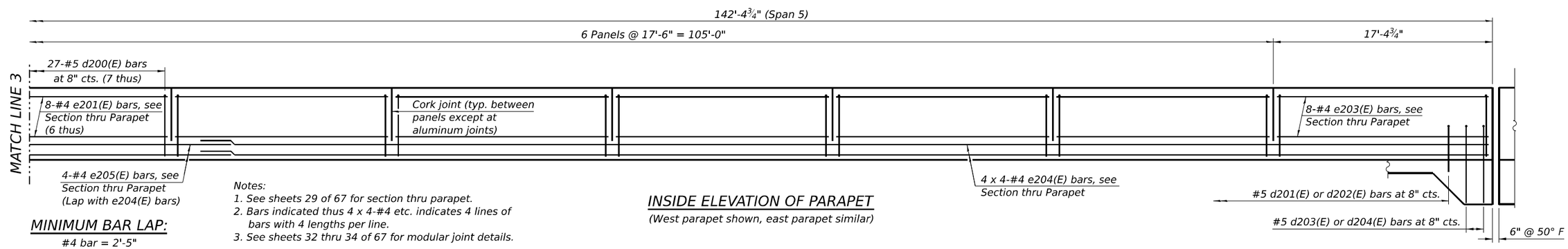

INSIDE ELEVATION OF PARAPET

(West parapet shown, east parapet similar)

Notes:
1. See sheets 29 of 67 for section thru parapet.
2. Bars indicated thus 4 x 4-#4 etc. indicates 4 lines of bars with 4 lengths per line.
3. See sheets 32 thru 34 of 67 for modular joint details.

MINIMUM BAR LAP:

#4 bar = 2'-5"

FILE NAME: pw://cmtengi-pw.bentley.com:cmt-connect-projects/Documents/IDOT/21094103-00/410300/Bridge/Sangamon River Bridges/CADD_Sheets/0840018 & 0840019-72K98-028-Superstructure Details - II

CMT License No. 184-000613 © Copyright CMT, Inc.

USER NAME = bholland	DESIGNED - BLH	REVISED -	
	DRAWN - BLH	REVISED -	
PLOT SCALE = N/A	CHECKED - DH	REVISED -	
PLOT DATE = 3/21/2024	DATE - MARCH 2024	REVISED -	

STATE OF ILLINOIS
DEPARTMENT OF TRANSPORTATION

SUPERSTRUCTURE DETAILS - II
STRUCTURE NO. 084-0018 (NB) & 084-0019 (SB)

SCALE: | SHEET 28 OF 67 SHEETS | STA. TO STA.

F.A.I. RTE.	SECTION	COUNTY	TOTAL SHEETS	SHEET NO.
55	(84-2BR-1)D,BY,BP,BRR	SANGAMON	139	70
		CONTRACT NO. 72K98		
		ILLINOIS FED. AID PROJECT		

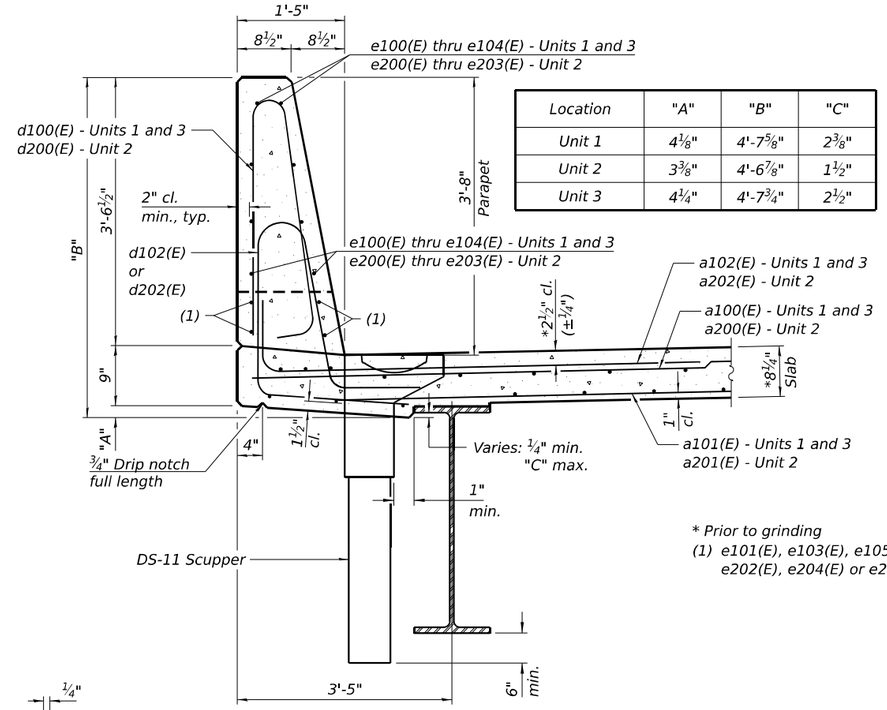

Location	"A"	"B"	"C"
Unit 1	4⅛"	4'-7⅝"	2⅜"
Unit 2	3⅜"	4'-6⅞"	1½"
Unit 3	4¼"	4'-7¾"	2½"

SECTION THRU MEDIAN PARAPET

(Looking North)
(NB bridge shown, SB bridge similar)

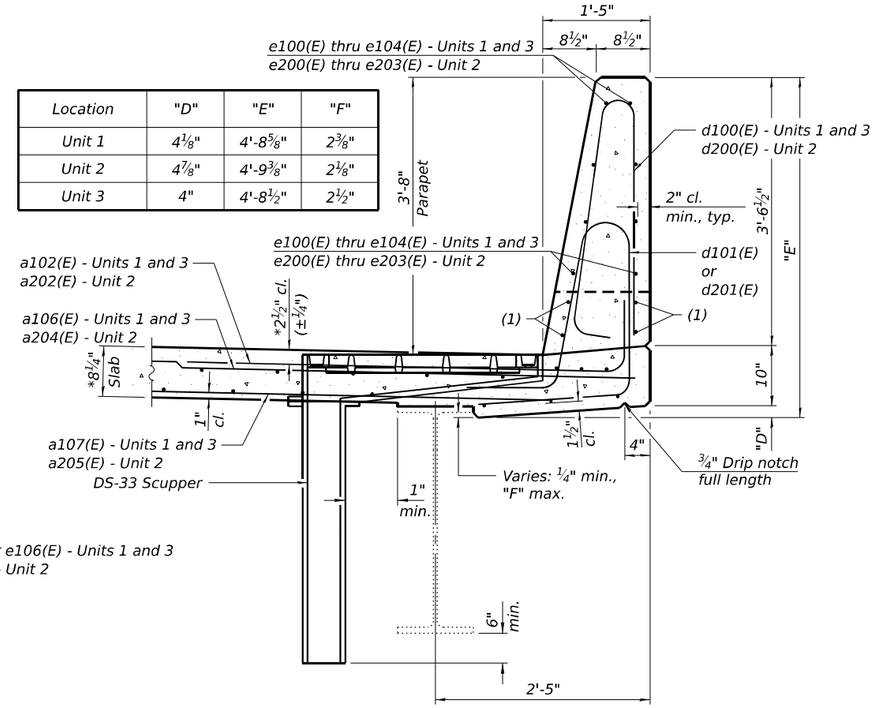

Location	"D"	"E"	"F"
Unit 1	4⅛"	4'-8⅝"	2⅜"
Unit 2	4⅞"	4'-9⅜"	2⅛"
Unit 3	4"	4'-8½"	2½"

SECTION THRU OUTSIDE PARAPET

(Looking North)
(NB bridge shown, SB bridge similar)

* Prior to grinding
(1) e101(E), e103(E), e105(E), or e106(E) - Units 1 and 3
e202(E), e204(E) or e205(E) - Unit 2

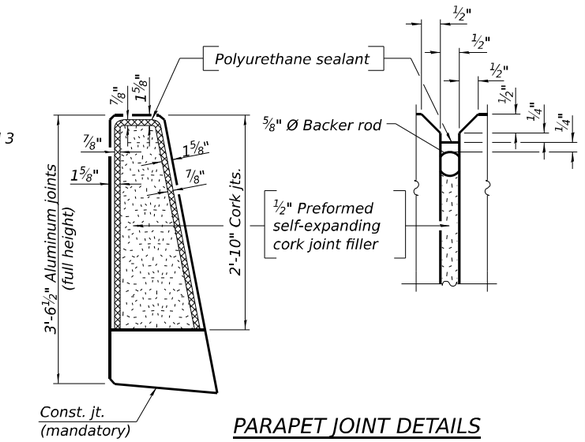

PARAPET JOINT DETAILS

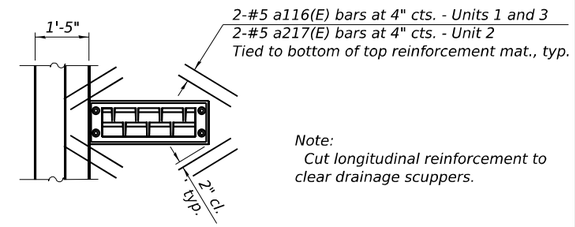

Note:
Cut longitudinal reinforcement to clear drainage scuppers.

PLAN (DS-33)

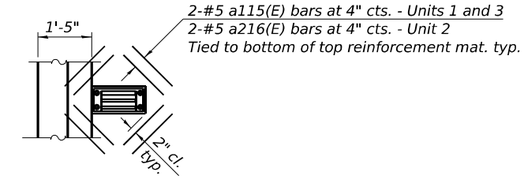

PLAN (DS-11)

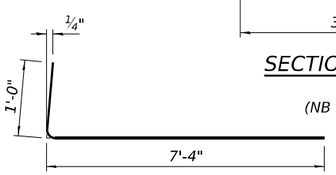

BARS a102(E) and a202(E)

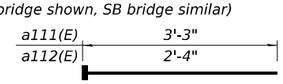

BARS a111(E) and a112(E)

(Headed. 200-#6 Bar terminators)

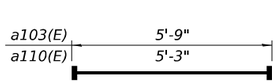

BARS a103(E) and a110(E)

(Headed. 1,600-#6 Bar terminators)

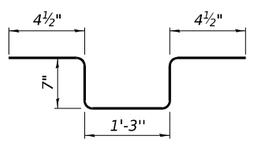

BAR a215(E)

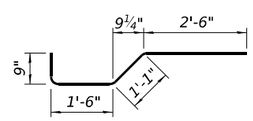

BAR x100(E)

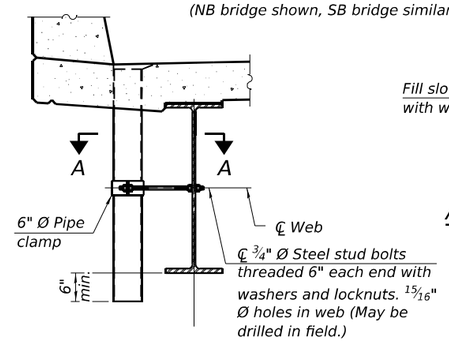

SECTION THRU PARAPET AT FLOOR DRAIN

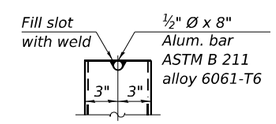

ALUMINUM TUBE

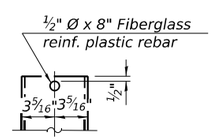

FIBERGLASS PIPE

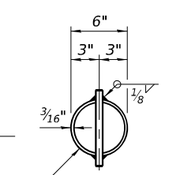

TOP PLAN

(Showing aluminum tube)

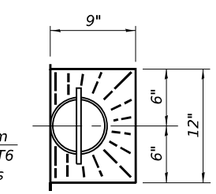

TOP PLAN

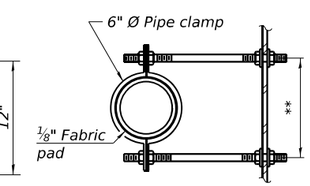

SECTION A-A

**Dimension as required by pipe clamp

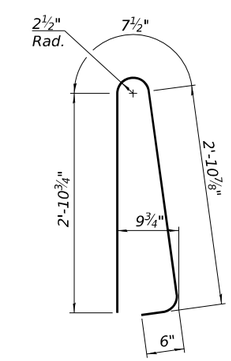

BAR d100(E) and d200(E)

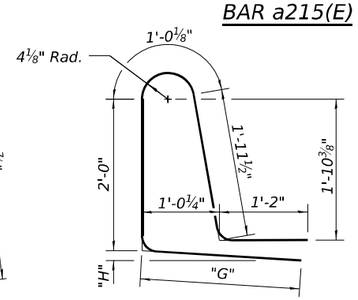

Bar	"G"	"H"
d101(E)	1'-8"	4"
d102(E)	2'-8"	4"
d201(E)	1'-5"	4"
d202(E)	2'-5"	3"

BARS d101(E), d102(E), d201(E), and d202(E)

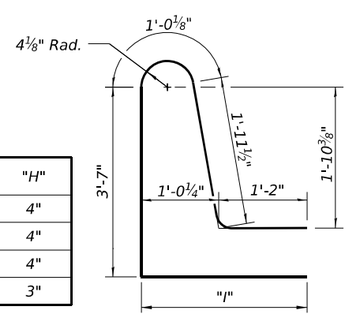

Bar	"I"
d103(E)	2'-1"
d104(E)	3'-1"
d203(E)	2'-1"
d204(E)	3'-1"

BARS d103(E), d104(E), d203(E), and d204(E)

Notes:
1. Fiberglass pipe shall conform to ASTM D2996, with short-time rupture strength hoop tensile stress of 30,000 p.s.i. minimum.
2. The exterior surfaces of the floor drains shall be painted according to Article 506 with the finish coat as specified. The exterior surfaces of the drains shall be cleaned according to the Society of Protective Coating's Spec. SSPC-SP1 prior to painting.
3. The top portion of aluminum floor drains shall be coated with 5 mils of either bitumen paint or epoxy paint to minimize reaction with wet concrete.
4. The clamping device shall be galvanized according to AASHTO M 232. Cost of clamping device included with Floor Drains.
5. The 3/16" minimum aluminum sheet shall be ASTM B 209 alloy 3003-H14 and coated with 5 mils of either bitumen paint or epoxy paint to minimize reaction with wet concrete. Cost included with Concrete Superstructure.
6. The Polyurethane Sealant shall be according to Article 1050.04 of the Std. Spec. and the color shall be gray.
7. Bar terminators, paid for separately. See Total Bill of Material.
8. For bar bend details at modular joint edge beams, see sheet 34 of 67.

CMT
License No. 184-000613 © Copyright CMT, Inc.

USER NAME = bholland	DESIGNED - BLH	REVISED -	
	DRAWN - BLH	REVISED -	
PLOT SCALE = N/A	CHECKED - DH	REVISED -	
PLOT DATE = 3/21/2024	DATE - MARCH 2024	REVISED -	

STATE OF ILLINOIS
DEPARTMENT OF TRANSPORTATION

SUPERSTRUCTURE DETAILS - III
STRUCTURE NO. 084-0018 (NB) & 084-0019 (SB)

SCALE: SHEET 29 OF 67 SHEETS STA. TO STA.

F.A.I. RTE.	SECTION	COUNTY	TOTAL SHEETS	SHEET NO.
55	(84-2BR-1)D,BY,BP,BRR	SANGAMON	139	71
		CONTRACT NO. 72K98		
		ILLINOIS FED. AID PROJECT		

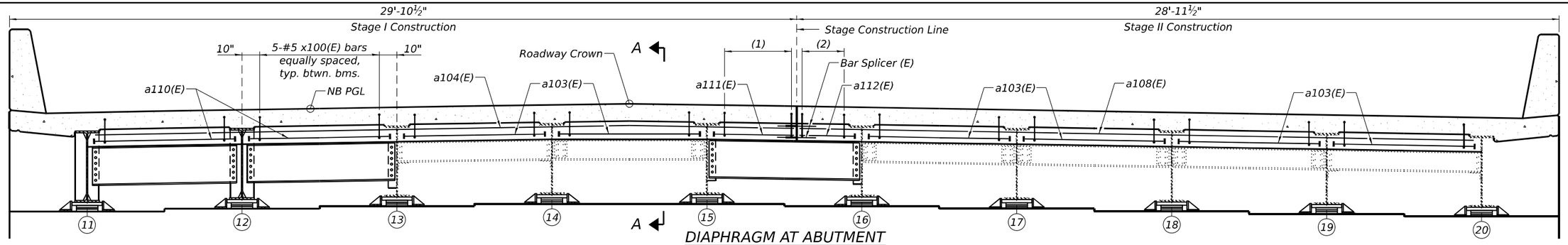

DIAPHRAGM AT ABUTMENT

(Looking North. NB north abutment shown, NB south abutment and SB abutments similar)

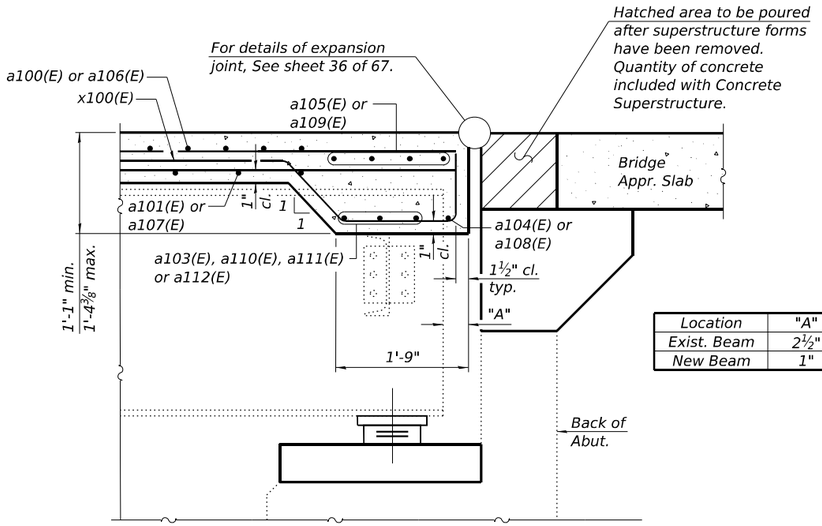

(1) 3-#5 x100(E) bars equally spaced
(2) 2-#5 x100(E) bars equally spaced

Location	"A"
Exist. Beam	2½"
New Beam	1"

SECTION A-A

(Full diaphragm not shown for clarity)

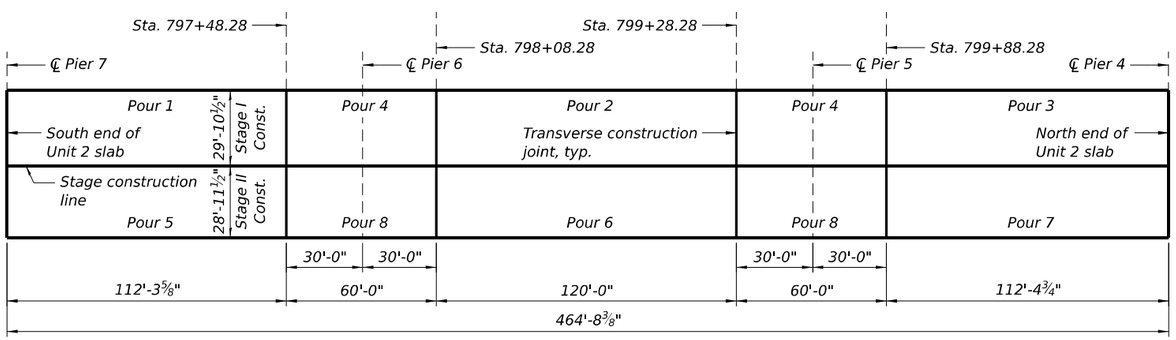

DECK POURING SEQUENCE - UNIT 2

(NB bridge shown, SB similar)

Note:
1. When the deck pour is stopped for the day at one or more of the transverse bonded construction joints in the deck pouring sequence as shown, the next pour shall not be made until both of the following are met:
   1. At least 72 hours shall have elapsed from the end of the previous pour.
   2. The concrete strength shall have attained a minimum flexural strength of 675 psi or a minimum compressive strength of 4000 psi.

NB & SB UNIT 1 SUPERSTRUCTURE BILL OF MATERIAL

Bar	No.	Size	Length	Shape
a100(E)	1112	#5	29'-7"	
a101(E)	778	#5	29'-7"	
a102(E)	2224	#6	8'-4"	
a103(E)	300	#6	5'-9"	
a104(E)	2	#5	29'-7"	
a105(E)	20	#5	29'-7"	
a106(E)	1112	#5	28'-8"	
a107(E)	778	#5	28'-8"	
a108(E)	2	#5	28'-8"	
a109(E)	20	#5	28'-8"	
a110(E)	100	#6	5'-3"	
a111(E)	50	#6	3'-3"	
a112(E)	50	#6	2'-4"	
a113(E)	44	#6	3'-1"	
a114(E)	44	#6	2'-1"	
a115(E)	48	#5	1'-6"	
a116(E)	48	#5	2'-0"	
b100(E)	1488	#5	30'-0"	
b101(E)	220	#6	45'-8"	
b102(E)	1224	#5	30'-0"	
b103(E)	110	#6	51'-6"	
b104(E)	124	#5	8'-4"	
b105(E)	102	#5	8'-4"	
d100(E)	2016	#5	7'-0"	
d101(E)	978	#5	7'-11"	
d102(E)	978	#5	8'-11"	
d103(E)	8	#5	9'-10"	
d104(E)	8	#5	10'-10"	
e100(E)	224	#4	15'-0"	
e101(E)	192	#4	10'-9"	
e102(E)	256	#4	17'-0"	
e103(E)	192	#4	11'-3"	
e104(E)	32	#4	14'-11"	
e105(E)	128	#4	30'-0"	
e106(E)	32	#4	5'-9"	
e107(E)	32	#4	13'-8"	
x100(E)	90	#5	5'-10"	
x101(E)	104	#5	4'-7"	
x102(E)	104	#5	6'-3"	
Floor Drains			Each	68
Concrete Superstructure			Cu. Yd.	1,289.7
Protective Coat			Sq. Yd.	4,735
Reinforcement Bars, Epoxy Coated			Pound	303,800
Bar Splicers			Each	2,188
Bridge Deck Grooving (Longitudinal)			Sq. Yd.	2,628
Bar Terminator			Each	1,076
Diamond Grinding (Bridge Section)			Sq. Yd.	3,795

NB & SB UNIT 2 SUPERSTRUCTURE BILL OF MATERIAL

Bar	No.	Size	Length	Shape
a200(E)	2012	#5	29'-7"	
a201(E)	1232	#5	29'-7"	
a202(E)	4024	#6	8'-4"	
a203(E)	24	#5	29'-7"	
a204(E)	2012	#5	28'-8"	
a205(E)	1232	#5	28'-8"	
a206(E)	24	#5	28'-8"	
a207(E)	8	#6	3'-1"	
a208(E)	80	#6	14'-1"	
a209(E)	16	#6	5'-3"	
a210(E)	176	#6	5'-9"	
a211(E)	264	#6	7'-2"	
a212(E)	88	#6	1'-9"	
a213(E)	88	#6	5'-4"	
a214(E)	88	#6	2'-1"	
a215(E)	404	#4	3'-2"	
a216(E)	32	#5	1'-6"	
a217(E)	32	#5	2'-0"	
b200(E)	2108	#5	30'-0"	
b201(E)	660	#6	31'-8"	
b202(E)	1904	#5	30'-0"	
b203(E)	24	#4	35'-0"	
b204(E)	124	#5	10'-2"	
b205(E)	112	#5	10'-2"	
d200(E)	2876	#5	7'-0"	
d201(E)	1380	#5	7'-11"	
d202(E)	1380	#5	8'-11"	
d203(E)	16	#5	9'-10"	
d204(E)	16	#5	10'-10"	
e200(E)	32	#4	17'-0"	
e201(E)	384	#4	17'-2"	
e202(E)	416	#4	19'-8"	
e203(E)	32	#4	17'-1"	
e204(E)	208	#4	30'-0"	
e205(E)	32	#4	11'-8"	
x200(E)	228	#5	6'-3"	
x201(E)	228	#5	4'-7"	
x202(E)	228	#5	6'-0"	
Floor Drains			Each	108
Concrete Superstructure			Cu. Yd.	1,842.0
Protective Coat			Sq. Yd.	6,701
Reinforcement Bars, Epoxy Coated			Pound	481,790
Bar Splicers			Each	3,804
Bridge Deck Grooving (Longitudinal)			Sq. Yd.	3,718
Bar Terminator			Each	1,440
Diamond Grinding (Bridge Section)			Sq. Yd.	5,370

NB & SB UNIT 3 SUPERSTRUCTURE BILL OF MATERIAL

Bar	No.	Size	Length	Shape
a100(E)	1112	#5	29'-7"	
a101(E)	778	#5	29'-7"	
a102(E)	2224	#6	8'-4"	
a103(E)	300	#6	5'-9"	
a104(E)	2	#5	29'-7"	
a105(E)	20	#5	29'-7"	
a106(E)	1112	#5	28'-8"	
a107(E)	778	#5	28'-8"	
a108(E)	2	#5	28'-8"	
a109(E)	20	#5	28'-8"	
a110(E)	100	#6	5'-3"	
a111(E)	50	#6	3'-3"	
a112(E)	50	#6	2'-4"	
a113(E)	44	#6	3'-1"	
a114(E)	44	#6	2'-1"	
a115(E)	48	#5	1'-6"	
a116(E)	48	#5	2'-0"	
b100(E)	1488	#5	30'-0"	
b101(E)	220	#6	45'-8"	
b102(E)	1224	#5	30'-0"	
b103(E)	110	#6	51'-6"	
b104(E)	124	#5	8'-4"	
b105(E)	102	#5	8'-4"	
d100(E)	2016	#5	7'-0"	
d101(E)	978	#5	7'-11"	
d102(E)	978	#5	8'-11"	
d103(E)	8	#5	9'-10"	
d104(E)	8	#5	10'-10"	
e100(E)	256	#4	15'-0"	
e101(E)	192	#4	10'-9"	
e102(E)	256	#4	17'-0"	
e103(E)	192	#4	11'-3"	
e105(E)	128	#4	30'-0"	
e106(E)	32	#4	5'-9"	
e107(E)	32	#4	13'-8"	
x100(E)	90	#5	5'-10"	
x101(E)	104	#5	4'-7"	
x103(E)	104	#5	6'-0"	
Floor Drains			Each	68
Concrete Superstructure			Cu. Yd.	1,287.1
Protective Coat			Sq. Yd.	4,737
Reinforcement Bars, Epoxy Coated			Pound	303,770
Bar Splicers			Each	2,188
Bridge Deck Grooving (Longitudinal)			Sq. Yd.	2,628
Bar Terminator			Each	1,076
Diamond Grinding (Bridge Section)			Sq. Yd.	3,796

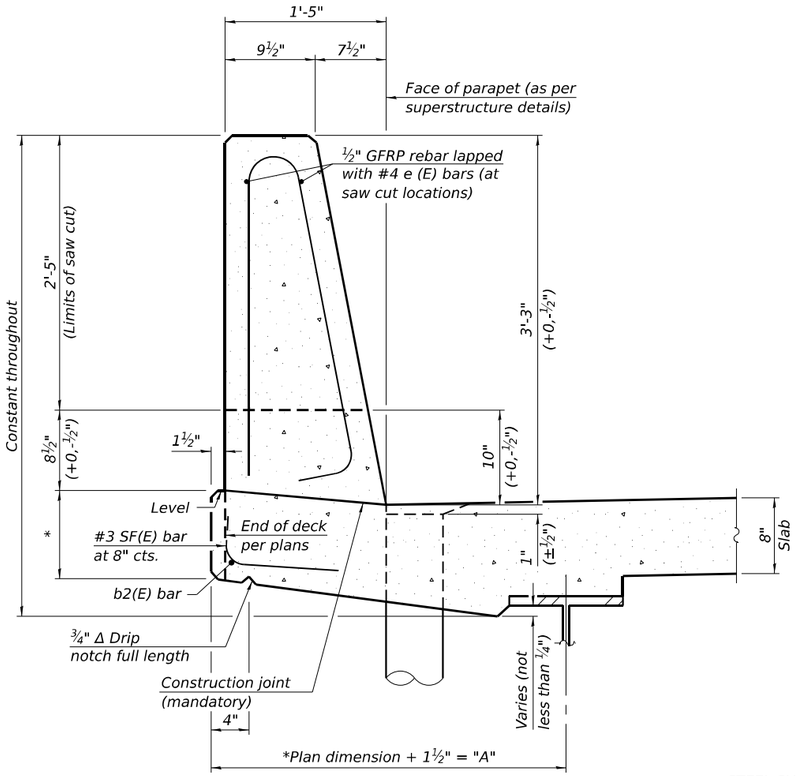

39" CONSTANT-SLOPE PARAPET SECTION

(Showing dimensions, d(E), and ½" Ø GFRP rebar)

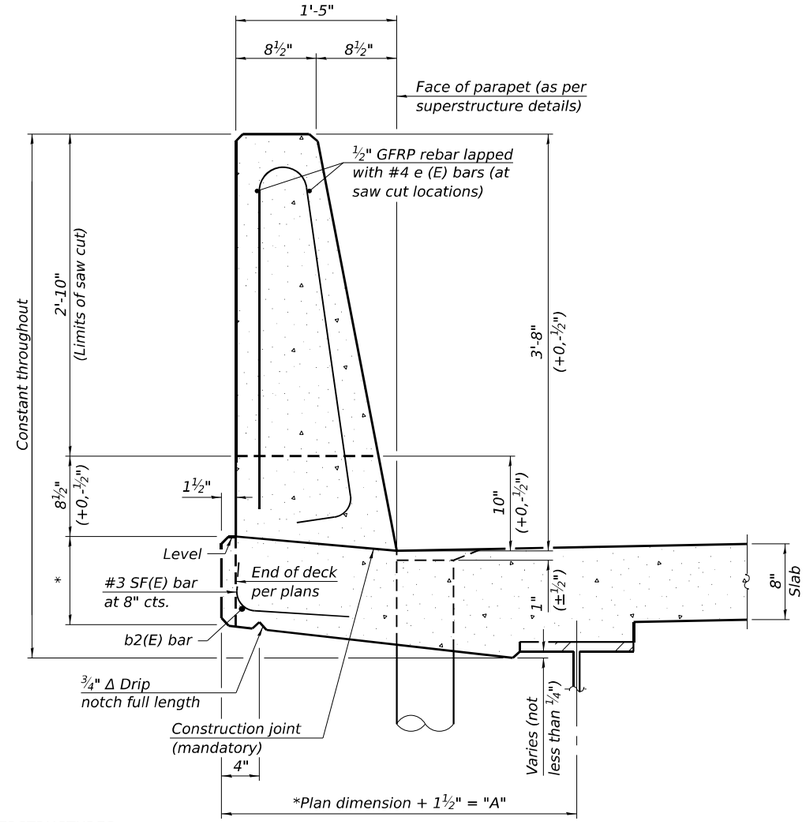

44" CONSTANT-SLOPE PARAPET SECTION

(Showing dimensions, d(E), and ½" Ø GFRP rebar)

STEEL SUPERSTRUCTURES

*See Superstructure Details.

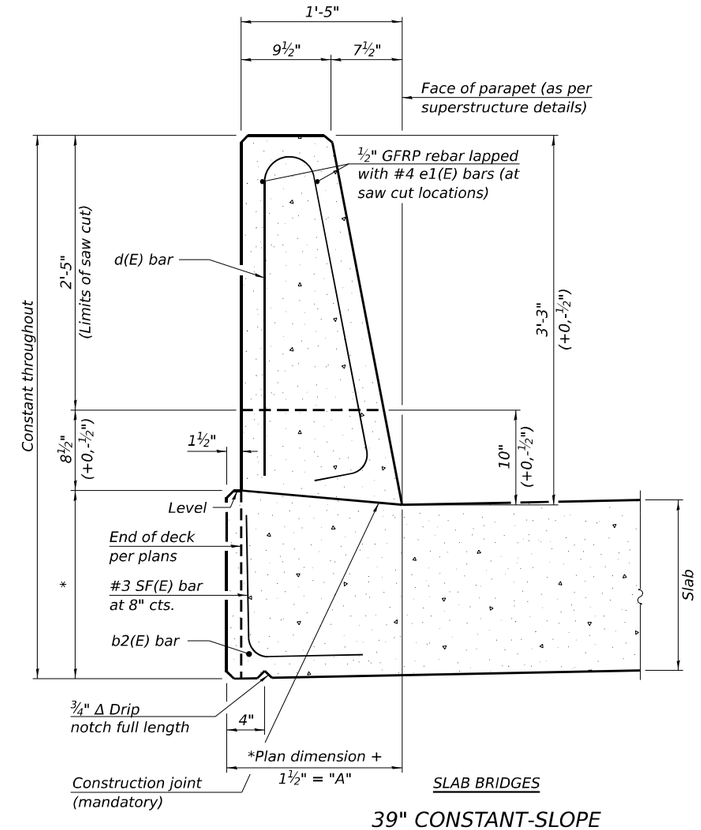

SLAB BRIDGES

39" CONSTANT-SLOPE PARAPET SECTION

(Showing dimensions, d(E), and ½" Ø GFRP rebar)

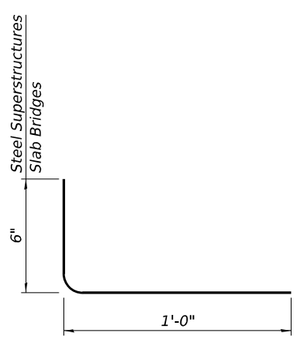

SF(E) BAR

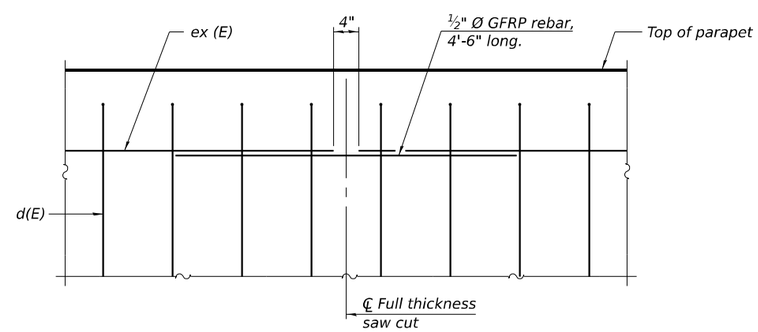

DETAIL - GFRP REBAR STIFFENING ELEVATION

(Place as shown in parapet section at each parapet joint location.)

Notes:
All dimensions shall remain the same as shown on superstructure details, except dimension "A" which is to be revised as shown.
Additional concrete needed to revise dimension "A" (39" and 44" parapets):
Steel Superstructures: 0.00348 cu. yds./ft.
Slab Bridge Superstructures: cu. yds./ft.
Place full depth aluminum sheets as shown on superstructure details.
Replace all cork joint filler locations with a full thickness saw cut.
Steel and slab superstructures shown. Other superstructure types similar.

SFP 39-44 10/27/2023

FILE NAME: pw://cmtengp-pw.bentley.com:cmt-connect-projects/Documents:IDOT/21004103-00/410300/Bridge/Sangamon River Bridges/CADD_Sheets/0840018 & 0840019-72K98-033-Concrete Parapet Slipforming Option

CMT License No. 184-000613 © Copyright CMT, Inc.

USER NAME = bholland	DESIGNED - BLH	REVISED -	
	DRAWN - BLH	REVISED -	
PLOT SCALE = N/A	CHECKED - DH	REVISED -	
PLOT DATE = 3/21/2024	DATE - MARCH 2024	REVISED -	

STATE OF ILLINOIS
DEPARTMENT OF TRANSPORTATION

CONCRETE PARAPET SLIPFORMING OPTION
STRUCTURE NO. 084-0018 (NB) & 084-0019 (SB)

SCALE: SHEET 31 OF 67 SHEETS STA. TO STA.

F.A.I. RTE.	SECTION	COUNTY	TOTAL SHEETS	SHEET NO.
55	(84-2BR-1)D,BY,BP,BRR	SANGAMON	139	73
		CONTRACT NO. 72K98		
		ILLINOIS FED. AID PROJECT		

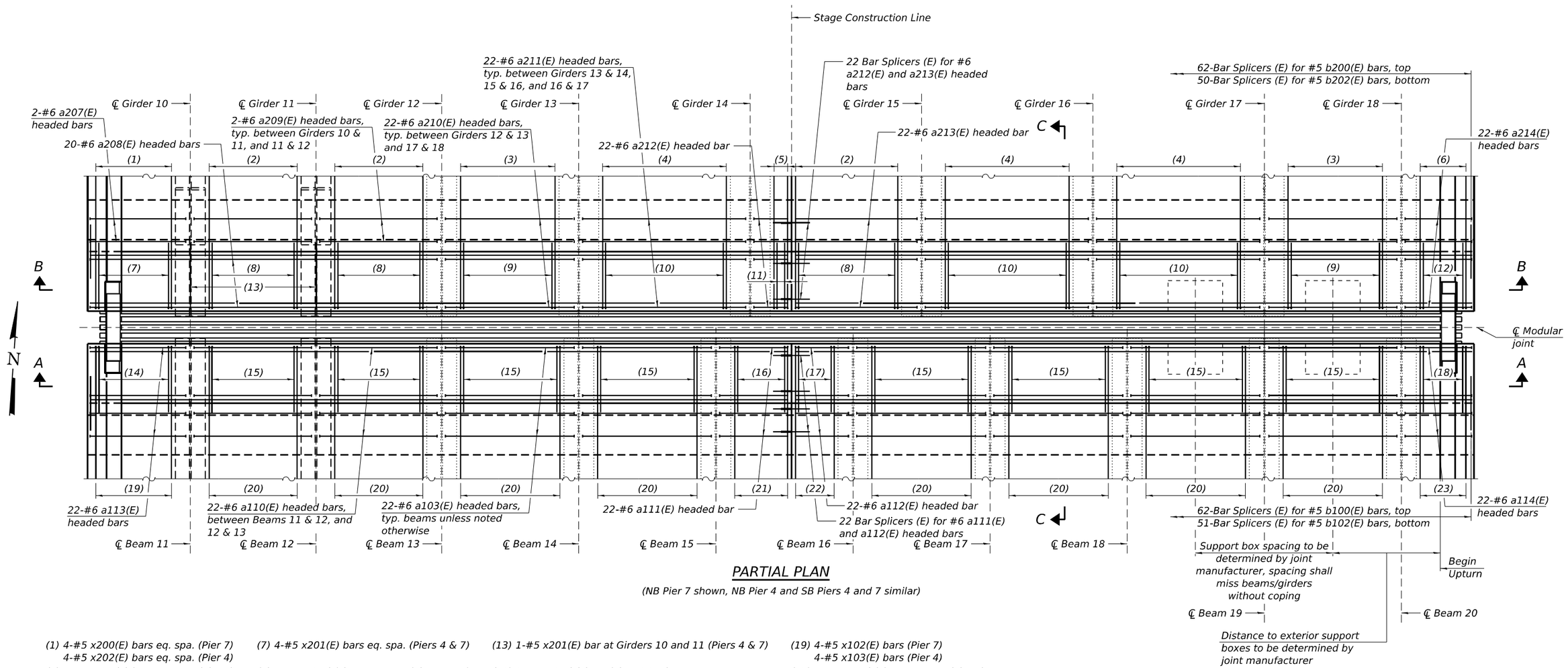

PARTIAL PLAN

(NB Pier 7 shown, NB Pier 4 and SB Piers 4 and 7 similar)

(1) 4-#5 x200(E) bars eq. spa. (Pier 7)
4-#5 x202(E) bars eq. spa. (Pier 4)

(2) 5-#5 x200(E) bars eq. spa. (Pier 7)
5-#5 x202(E) bars eq. spa. (Pier 4)

(3) 6-#5 x200(E) bars eq. spa. (Pier 7)
6-#5 x202(E) bars eq. spa. (Pier 4)

(4) 7-#5 x200(E) bars eq. spa. (Pier 7)
7-#5 x202(E) bars eq. spa. (Pier 4)

(5) 2-#5 x200(E) bars eq. spa. (Pier 7)
2-#5 x202(E) bars eq. spa. (Pier 4)

(6) 3-#5 x200(E) bars eq. spa. (Pier 7)
3-#5 x202(E) bars eq. spa. (Pier 4)

(7) 4-#5 x201(E) bars eq. spa. (Piers 4 & 7)

(8) 5-#5 x201(E) bars eq. spa. (Piers 4 & 7)

(9) 6-#5 x201(E) bars eq. spa. (Piers 4 & 7)

(10) 7-#5 x201(E) bars eq. spa. (Piers 4 & 7)

(11) 2-#5 x201(E) bars eq. spa. (Piers 4 & 7)

(12) 3-#5 x201(E) bars eq. spa. (Piers 4 & 7)

(13) 1-#5 x201(E) bar at Girders 10 and 11 (Piers 4 & 7)

(14) 4-#5 x101(E) bars (Piers 4 & 7)

(15) 5-#5 x101(E) bars eq. spa. (Piers 4 & 7)

(16) 3-#5 x101(E) bars eq. spa. (Piers 4 & 7)

(17) 2-#5 x101(E) bars eq. spa. (Piers 4 & 7)

(18) 3-#5 x101(E) bars (Piers 4 & 7)

(19) 4-#5 x102(E) bars (Pier 7)
4-#5 x103(E) bars (Pier 4)

(20) 5-#5 x102(E) bars eq. spa. (Pier 7)
5-#5 x103(E) bars eq. spa. (Pier 4)

(21) 3-#5 x102(E) bars eq. spa. (Pier 7)
3-#5 x103(E) bars eq. spa. (Pier 4)

(22) 2-#5 x102(E) bars eq. spa. (Pier 7)
2-#5 x103(E) bars eq. spa. (Pier 4)

(23) 3-#5 x102(E) bars (Pier 7)
3-#5 x103(E) bars (Pier 4)

Notes:
1. See sheet 33 of 67 for Section A-A and Section B-B.
2. See sheet 34 of 67 for Section C-C, bar bend details, and Bill of Material.
3. See sheets 41 thru 43 of 67 for beam/girder numbering on NB and SB bridges.

FILE NAME: pw://cmtengp-pw.bentley.com:cmc-connect-projects/Documents/IDOT/21094103-00/410300/Bridge/Sangamon River Bridges/CADD_Sheets/0840018 & 0840019-72K98-032-Modular Joint Details - I

CMT License No. 184-000613 © Copyright CMT, Inc.

USER NAME = bholland	DESIGNED - BLH	REVISED -	
	DRAWN - BLH	REVISED -	
PLOT SCALE = N/A	CHECKED - DH	REVISED -	
PLOT DATE = 3/21/2024	DATE - MARCH 2024	REVISED -	

STATE OF ILLINOIS
DEPARTMENT OF TRANSPORTATION

MODULAR JOINT DETAILS - I
STRUCTURE NO. 084-0018 (NB) & 084-0019 (SB)

SCALE: SHEET 32 OF 67 SHEETS STA. TO STA.

F.A.I. RTE.	SECTION	COUNTY	TOTAL SHEETS	SHEET NO.
55	(84-2BR-1)D,BY,BP,BRR	SANGAMON	139	74
		CONTRACT NO. 72K98		
		ILLINOIS FED. AID PROJECT		

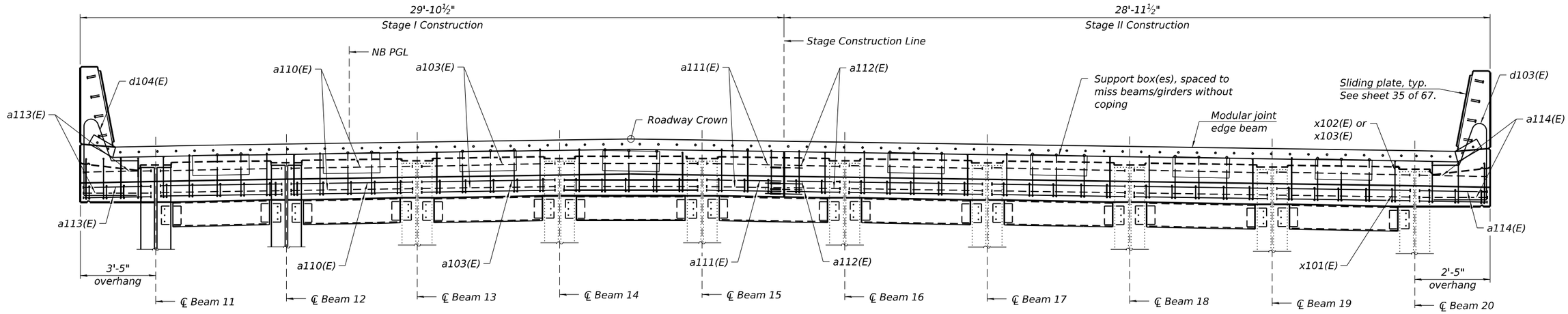

SECTION A-A

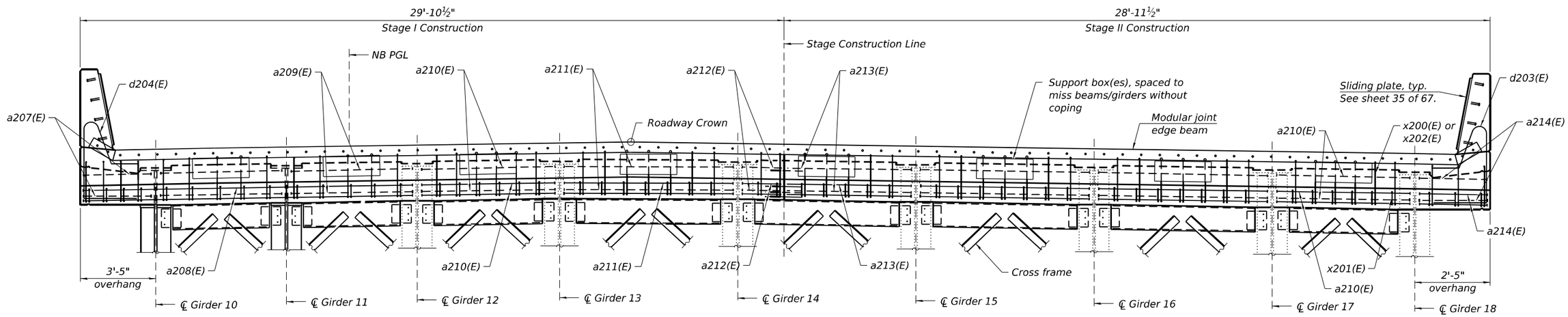

SECTION B-B

Note:
1. See sheets 41 thru 43 of 67 for beam/girder numbering on NB and SB bridges.

FILE NAME: pw://cmtengi-pw.bentley.com:cmt-connect-projects/Documents:IDOT/21004103-00/410300/Bridge/Sangamon River Bridges/CADD_Sheets/0840018 & 0840015-72K98-033-Modular Joint Details - II

CMT
License No. 184-000613

USER NAME = bholland	DESIGNED - BLH	REVISED -	
	DRAWN - BLH	REVISED -	
PLOT SCALE = N/A	CHECKED - DH	REVISED -	
PLOT DATE = 3/21/2024	DATE - MARCH 2024	REVISED -	

STATE OF ILLINOIS
DEPARTMENT OF TRANSPORTATION

MODULAR JOINT DETAILS - II
STRUCTURE NO. 084-0018 (NB) & 084-0019 (SB)

SCALE: | SHEET 33 OF 67 SHEETS | STA. | TO STA.

F.A.I. RTE.	SECTION	COUNTY	TOTAL SHEETS	SHEET NO.
55	(84-2BR-1)D,BY,BP,BRR	SANGAMON	139	75
		CONTRACT NO. 72K98		
		ILLINOIS	FED. AID PROJECT	

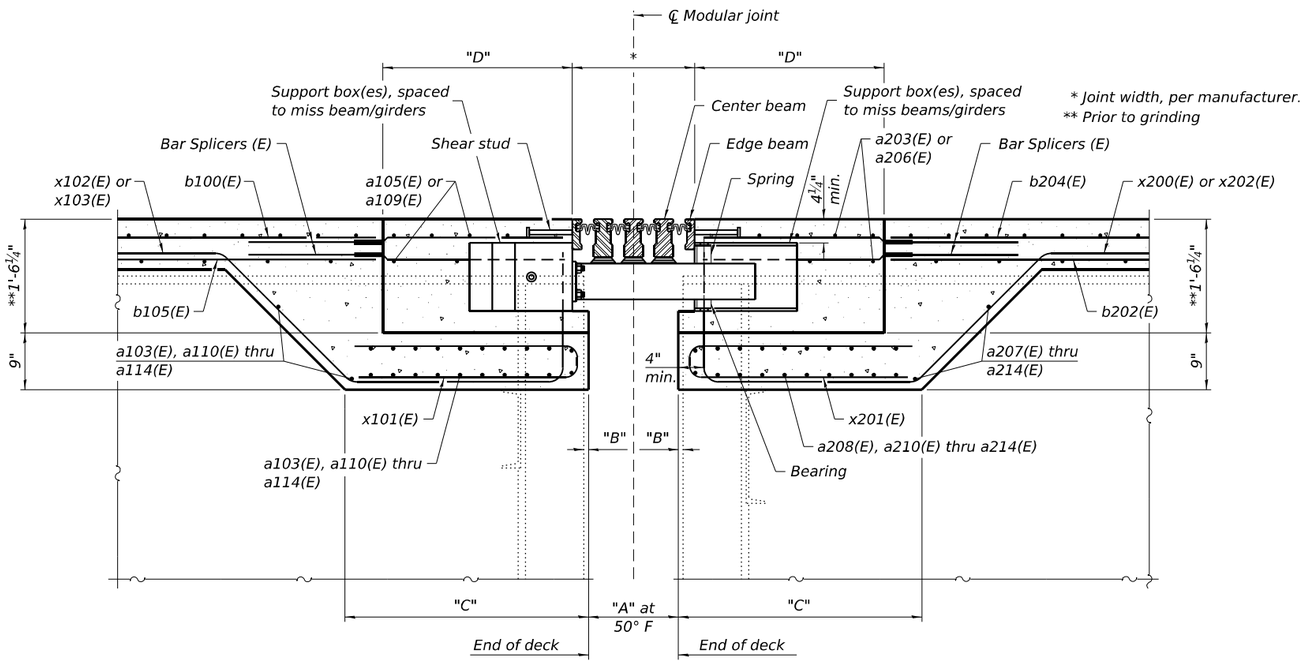

SECTION C-C

(Pier 7 shown, Pier 4 similar)

Location	"A"	"B" at new beams/girders	"B" at existing beams/girders	"C"	"D"
Pier 4	6"	½"	2¼"	27"	21"
Pier 7	8¼"	⅝"	1 1/16"	30"	24"

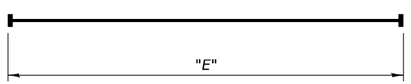

HEADED BAR

Bar	"E"	Bar size	Number of bar terminators
a113(E)	3'-1"	#6	176
a114(E)	2'-1"	#6	176
a207(E)	3'-1"	#6	16
a208(E)	14'-1"	#6	160
a209(E)	5'-3"	#6	32
a210(E)	5'-9"	#6	352
a211(E)	7'-3"	#6	528
a214(E)	2'-1"	#6	176

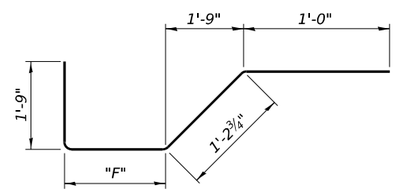

BAR

Bar	"F"
x102(E)	2'-3"
x103(E)	2'-0"
x200(E)	2'-3"
x202(E)	2'-0"

Notes:

1. Actual dimensions may vary depending on modular joint manufacturer's design.
2. Modular expansion joint assembly shall be installed after the concrete ledge below the blockout has been poured and reached required strength as specified on the General Plan and Elevation.
3. Modular expansion joints shall be adjusted for temperature prior to pouring the blockout area.
4. Modular expansion joints shall be assembled in their final relative position with ends in place for shop inspection and acceptance.
5. For modular joint cross frame and diaphragm details, see sheets 47 and 48 of 67.
6. Bars in the blockout may be adjusted in the field if necessary to miss joint support boxes, as approved by the Engineer.
7. See sheets 3 and 4 of 67 for staging details.
8. Cut x102(E), x103(E), x200(E), and x202(E) bars as required at support boxes.
9. See sheets 23 thru 26 of 67 for primary slab reinforcement size and spacing.
10. See sheet 35 of 67 for sliding plate details.
11. Bar terminators, paid for separately. See Total Bill of Material.

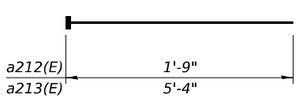

BARS a212(E) and a213(E)

(Headed. 176-#6 Bar terminators)

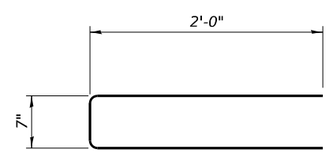

BARS x101(E) and x201(E)

Location	Total Long. Movement (in.)	Total Lateral Movement (in.)	Joint Size (in.)
Pier 4	5¼"	0"	6"
Pier 7	7⅝"	0"	9"

BILL OF MATERIAL

Item	Unit	Quantity
Modular Expansion Joint 6"	Foot	118
Modular Expansion Joint 9"	Foot	118

FILE NAME: pw://cmtengi-pw.bentley.com:cmt-connect-projects/Documents/IDOT/21094103-00/410300/Bridge/Sangamon River Bridges/CADD_Sheets/0840018 & 0840019-72K98-034-Modular Joint Details - III

CMT
License No. 184-000813 © Copyright CMT, Inc.

USER NAME = bholland	DESIGNED - BLH	REVISED -	
	DRAWN - BLH	REVISED -	
PLOT SCALE = N/A	CHECKED - DH	REVISED -	
PLOT DATE = 3/21/2024	DATE - MARCH 2024	REVISED -	

STATE OF ILLINOIS
DEPARTMENT OF TRANSPORTATION

MODULAR JOINT DETAILS - III
STRUCTURE NO. 084-0018 (NB) & 084-0019 (SB)

SCALE: SHEET 34 OF 67 SHEETS STA. TO STA.

F.A.I. RTE.	SECTION	COUNTY	TOTAL SHEETS	SHEET NO.
55	(84-2BR-1)D,BY,BP,BRR	SANGAMON	139	76
		CONTRACT NO. 72K98		
		ILLINOIS FED. AID PROJECT		

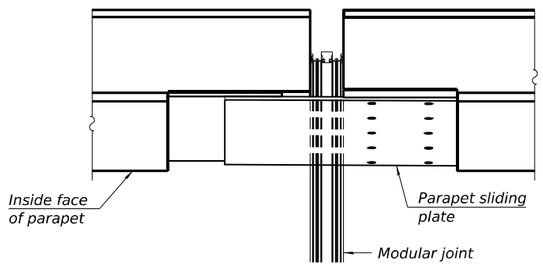

PLAN AT PARAPET

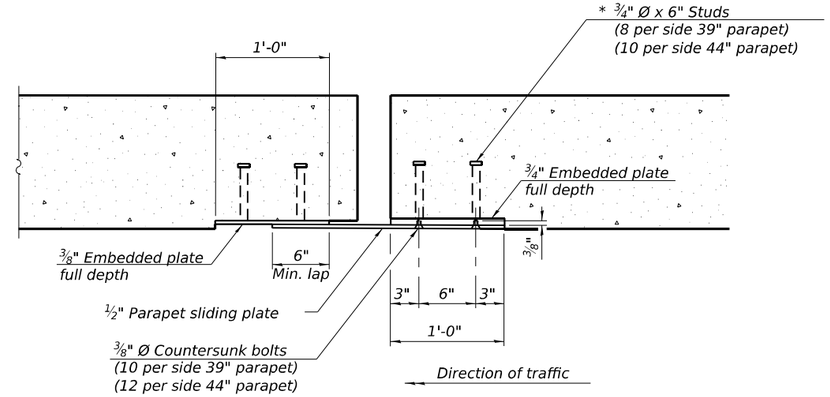

SECTION B-B

Notes:
All steel components shall be galvanized after fabrication according to Article 520.03 of the Standard Specifications.
Cost of parapet sliding plates, embedded plates, and anchorage studs, is included with Modular Expansion Joint _".
Actual dimension of joint opening may vary based on modular joint manufacturer's design.

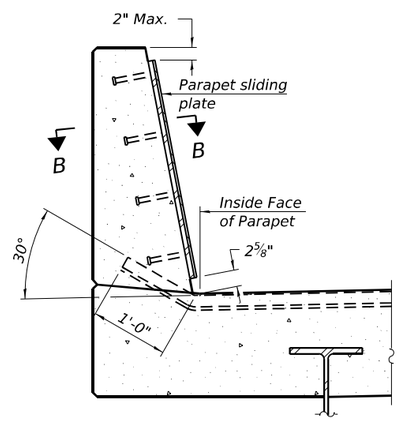

SECTION AT PARAPET

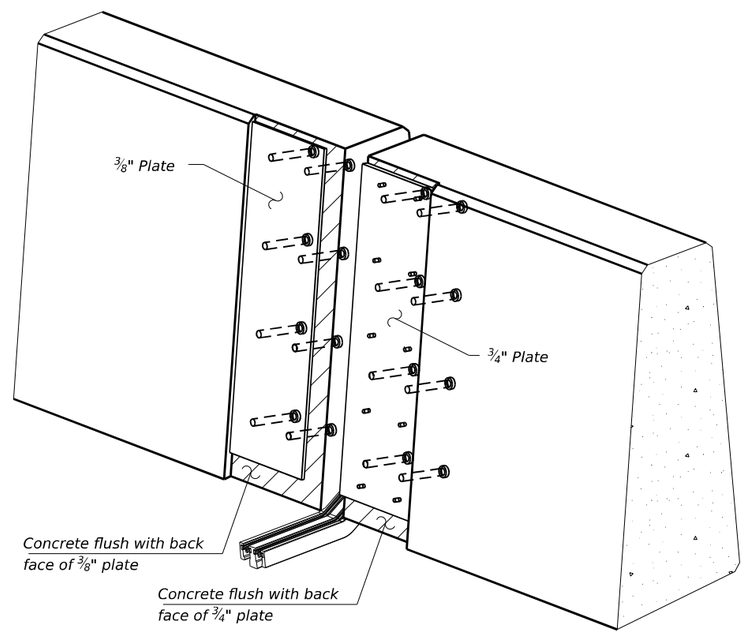

TRIMETRIC VIEW
(Showing embedded plates only)

* Granular or solid flux filled headed studs conforming to Article 1006.32 of the Standard Specifications, automatically end welded.

EJ-MOD-PSP 5-15-2023

FILE NAME: pw://centerpiew.bentley.com:cmt-connect-projects/Documents/IDOT/21004103-00/410300/Bridge/Sangamon River Bridges/CADD_Sheets/0840018 & 0840019-72K98-035-Modular Joint Sliding Plate Details

CMT
License No. 184-000613 © Copyright CMT, Inc.

USER NAME = bholland	DESIGNED - BLH	REVISED -	
	DRAWN - BLH	REVISED -	
PLOT SCALE = N/A	CHECKED - DH	REVISED -	
PLOT DATE = 3/21/2024	DATE - MARCH 2024	REVISED -	

STATE OF ILLINOIS
DEPARTMENT OF TRANSPORTATION

MODULAR JOINT SLIDING PLATE DETAILS
STRUCTURE NO. 084-0018 (NB) & 084-0019 (SB)

SCALE: SHEET 35 OF 67 SHEETS STA. TO STA.

F.A.I. RTE.	SECTION	COUNTY	TOTAL SHEETS	SHEET NO.
55	(84-2BR-1)D,BY,BP,BRR	SANGAMON	139	77
		CONTRACT NO. 72K98		
	ILLINOIS	FED. AID PROJECT		

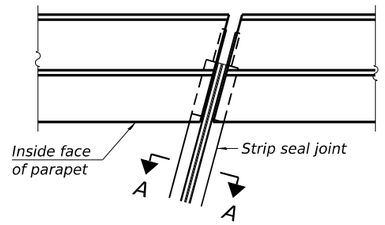

FOR SKEWS ≤ 30°

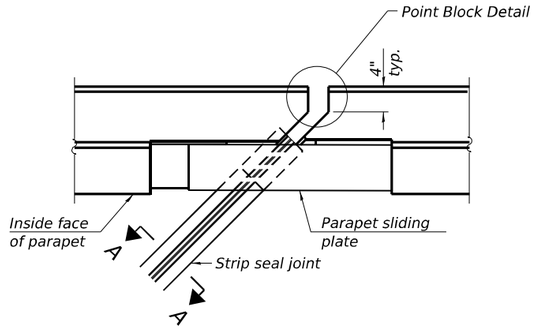

FOR SKEWS > 30°

PLAN AT PARAPET

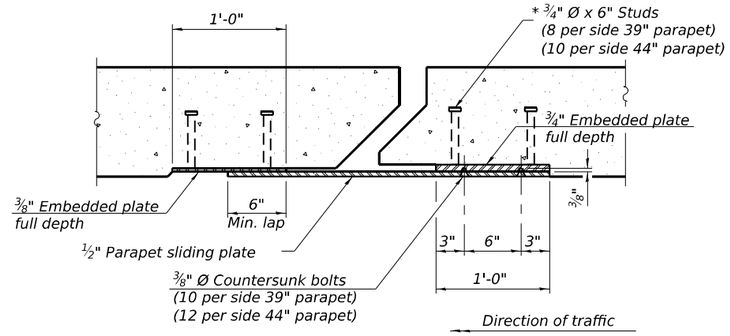

SECTION B-B

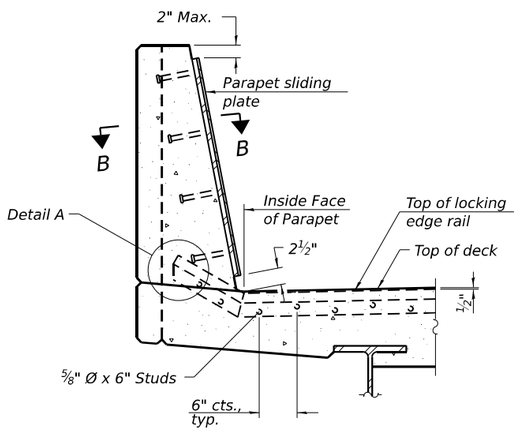

SECTION AT PARAPET

(Skews > 30° shown. Skews ≤ 30° similar except as shown in plan view.)

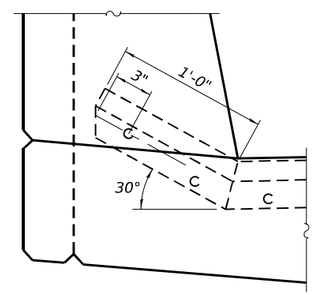

DETAIL A

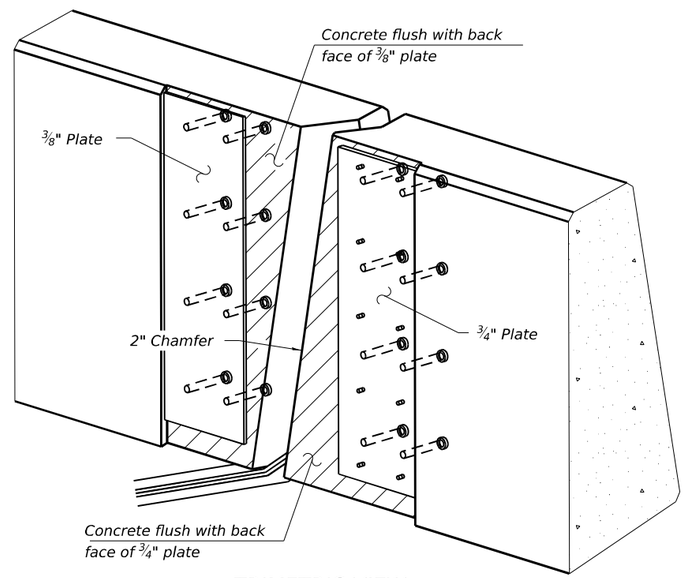

TRIMETRIC VIEW

(Showing embedded plates only)

Notes:

The strip seal shall be made continuous and shall have a minimum thickness of ¼". The configuration of the strip seal shall match the configuration of the locking edge rails. Open or "webbed" strip seal gland configurations are not permitted. The gland shall be sized for a maximum rated movement of 4 inches.

The locking edge rails depicted are configured for typical applications and are conceptual only. The actual configuration of the locking edge rails and matching strip seal may vary from manufacturer to manufacturer provided they fit the application and meet the minimum anchorage shown. Flanged edge rails, however, will not be allowed. Locking edge rails may exceed the 4½" maximum depth provided the anchorage system is revised according to the manufacturer's recommendation.

The manufacturer's recommended installation methods shall be followed.

All steel components shall be galvanized after fabrication according to Article 520.03 of the Standard Specifications.

The Maximum space between locking edge rail segments shall be c" and sealed with a suitable sealant; however, any rail joint within 10' measured perpendicular to the face of the curb or parapet shall be welded as shown in the locking edge rail splice detail.

Cost of parapet sliding plates, embedded plates, and anchorage studs included with Preformed Joint Strip Seal.

39" constant slope barrier shown, 44" constant slope barrier similar as noted.

The concrete opening below the strip seal will vary based on the locking edge rail chosen by the Contractor. Deck and parapet lengths shown elsewhere in the plans are dimensioned to the concrete opening, not the joint opening, and are based on the rolled locking edge rail. If the Contractor elects to use a different locking edge rail, dimensional adjustments may be required. One exception to this would be the strip seal joint at the end of the precast bridge approach slab. For these cases the pavement connector length shall be adjusted, not the length of the bridge approach slab.

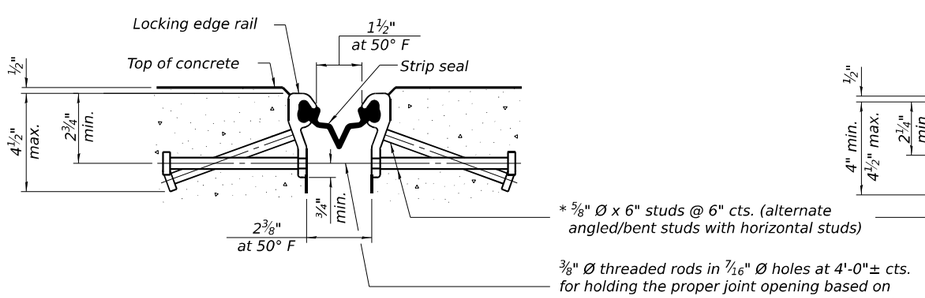

SHOWING ROLLED RAIL JOINT

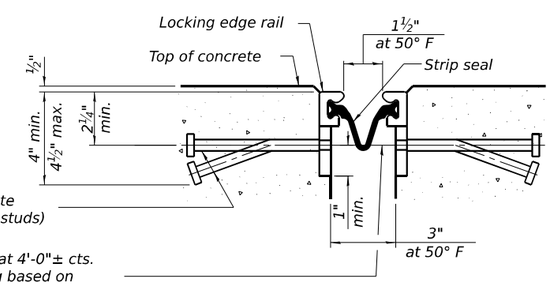

SHOWING WELDED RAIL JOINT

SECTION A-A

* Granular or solid flux filled headed studs conforming to Article 1006.32 of the Std. Specs., automatically end welded.

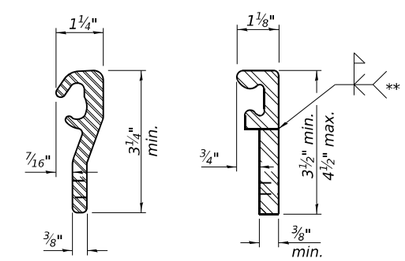

ROLLED (EXTRUDED) RAIL

WELDED RAIL

LOCKING EDGE RAILS

** Back gouge not required if complete joint penetration is verified by mock-up.

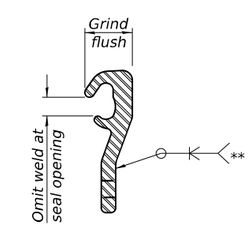

LOCKING EDGE RAIL SPLICE

The inside of the locking edge rail groove shall be free of weld residue. Rolled rail shown, welded rail similar.

BILL OF MATERIAL

Item	Unit	Total
Preformed Joint Strip Seal	Foot	236

FILE NAME: pw://cmtengp-pw.bentley.com:cmt-connect-projects/Documents/IDOT/21004103-00/410300/Bridge/Sangamon River Bridges/CADD_Sheets/0840018 & 0840019-72K98-435-Modified Preformed Joint Strip Seal

CMT
License No. 184-000613
© Copyright CMT, Inc.

USER NAME = bholland	DESIGNED - BLH	REVISED -	
	DRAWN - BLH	REVISED -	
PLOT SCALE = N/A	CHECKED - DH	REVISED -	
PLOT DATE = 3/21/2024	DATE - MARCH 2024	REVISED -	

STATE OF ILLINOIS
DEPARTMENT OF TRANSPORTATION

MODIFIED PREFORMED JOINT STRIP SEAL
STRUCTURE NO. 084-0018 (NB) & 084-0019 (SB)

SCALE: | SHEET 36 OF 67 SHEETS | STA. | TO STA.

F.A.I. RTE.	SECTION	COUNTY	TOTAL SHEETS	SHEET NO.
55	(84-2BR-1)D,BY,BP,BRR	SANGAMON	139	78
		CONTRACT NO. 72K98		
		ILLINOIS FED. AID PROJECT		

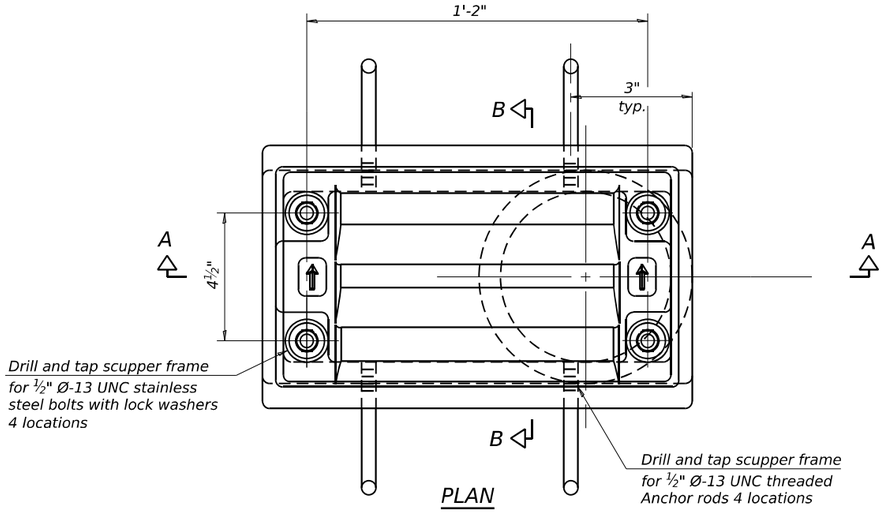

PLAN

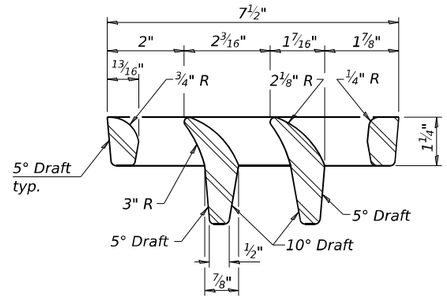

VANE GRATE DETAIL

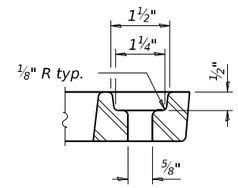

GRATE BOLT HOLE DETAIL

Notes:

All cast iron parts shall be gray iron conforming to the requirements of AASHTO M105, Class 35B and AASHTO M306.

Bolts, anchor rods, nuts and washers shall be according to ASTM A307 and shall be galvanized according to AASHTO M232. As an alternate stainless steel may be used.

Stainless steel hardware shall be according to Article 1006.29(d) of the Standard Specifications.

Structural steel weldments of equal sections and of the same configuration may be substituted for the cast iron scupper frames and downspouts; however, the scupper grates shall remain cast iron. Fillet or full penetration welds shall be used for the weldments. Details shall be submitted to the Engineer for approval.

Structural steel scupper frames and downspouts, when utilized, shall be galvanized according to AASHTO M111.

As an alternate, fiberglass may be used for downspouts according to ASTM D2996 with a short-time rupture strength hoop tensile stress of 30,000 psi min. in lieu of the cast iron or structural steel.

Exterior surfaces of downspouts and exterior exposed surfaces of the scupper frame below deck shall be treated as specified on sheet 2 of 67.

The Contractor shall take appropriate measures to assure that Protective Coat is not applied to the scupper.

Cost of the grate, frame, downspout, anchor rods, nuts and washers including complete installation of the scupper shall be paid for at the contract unit price for Drainage Scuppers, DS-11.

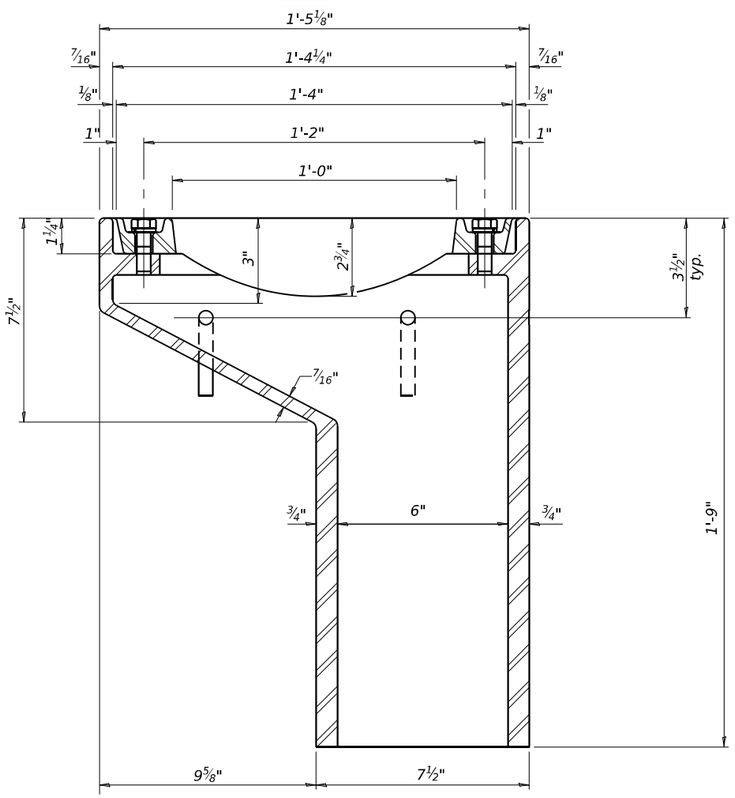

SECTION A-A

See sheet 29 of 67 for scupper location relative to parapet.

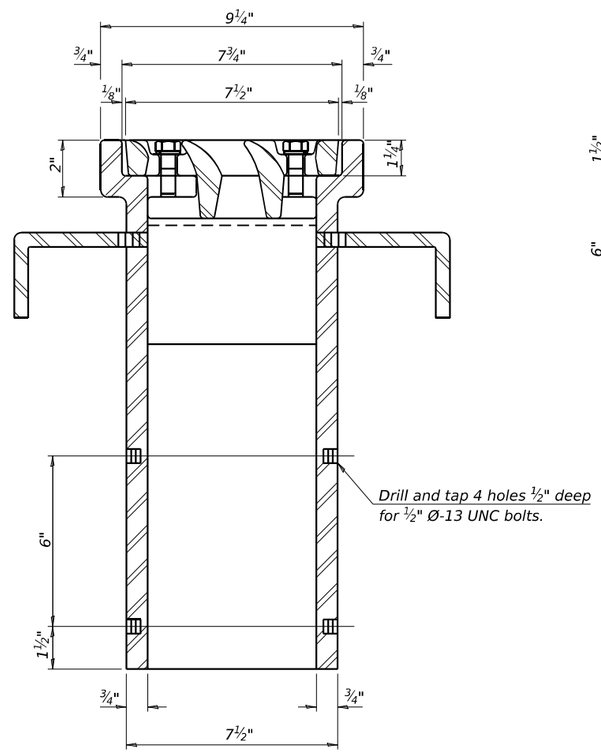

SECTION B-B

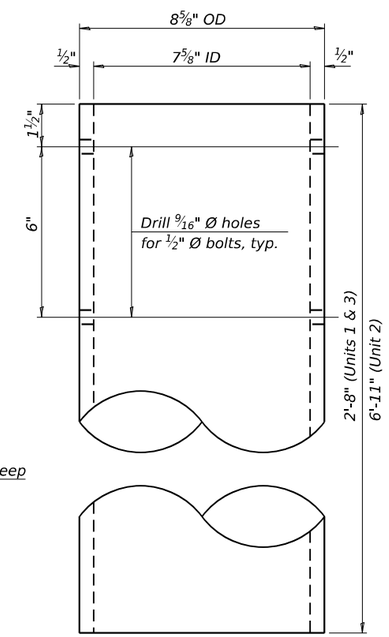

DOWNSPOUT

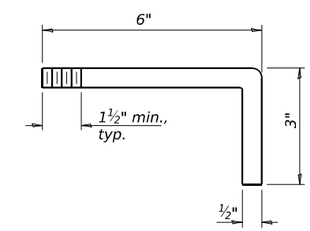

ANCHOR ROD DETAIL

BILL OF MATERIAL

ITEM	UNIT	QUANTITY
Drainage Scuppers, DS-11	Each	8

DS-11 5-15-2023

FILE NAME: pw://cmtengp-pw.sentiey.com:cmt-connect-projects/Documents:IDOT/21094103-00/410300/Bridge/Sangamon River Bridges/CADD_Sheets/0840018 & 0840019-72K98-037-Drainage Scupper, DS-11

CMT License No. 184-000613 © Copyright CMT, Inc.

USER NAME = bholland	DESIGNED - BLH	REVISED -	
	DRAWN - BLH	REVISED -	
PLOT SCALE = N/A	CHECKED - DH	REVISED -	
PLOT DATE = 3/21/2024	DATE - MARCH 2024	REVISED -	

STATE OF ILLINOIS
DEPARTMENT OF TRANSPORTATION

DRAINAGE SCUPPER, DS-11
STRUCTURE NO. 084-0018 (NB) & 084-0019 (SB)

SCALE: SHEET 37 OF 67 SHEETS STA. TO STA.

F.A.I. RTE.	SECTION	COUNTY	TOTAL SHEETS	SHEET NO.
55	(84-2BR-1)D,BY,BP,BRR	SANGAMON	139	79
		CONTRACT NO. 72K98		
		ILLINOIS	FED. AID PROJECT	

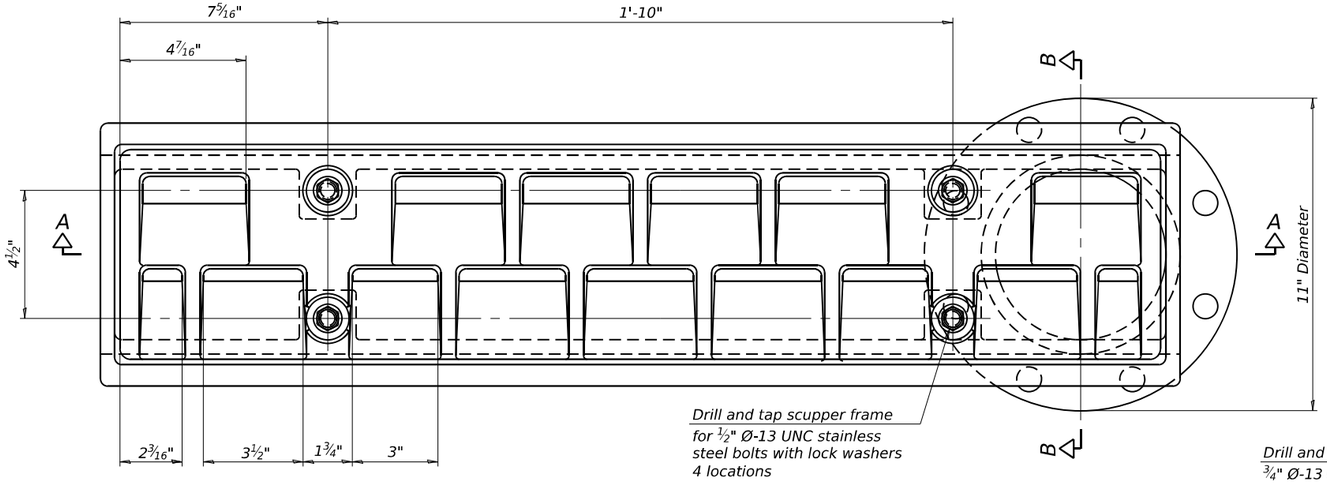

PLAN

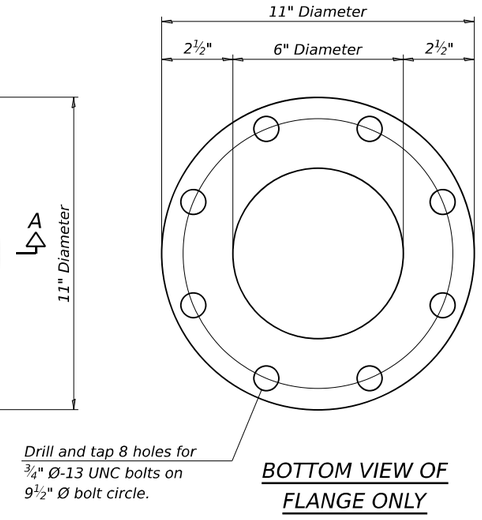

BOTTOM VIEW OF FLANGE ONLY

Notes:

All cast iron parts shall be gray iron conforming to the requirements of AASHTO M105, Class 35B and AASHTO M306.

Bolts, nuts and washers shall be according to ASTM A307 and shall be galvanized according to AASHTO M232. As an alternate stainless steel may be used.

Stainless steel hardware shall be according to Article 1006.29(d) of the Standard Specifications.

Structural steel weldments of equal sections and of the same configuration may be substituted for the cast iron scupper frames and downspouts; however, the scupper grates shall remain cast iron. Fillet or full penetration welds shall be used for the weldments. Details shall be submitted to the Engineer for approval.

Structural steel scupper frames and downspouts, when utilized, shall be galvanized according to AASHTO M111.

As an alternate, fiberglass may be used for downspouts according to ASTM D2996 with a short-time rupture strength hoop tensile stress of 30,000 psi min. in lieu of the cast iron or structural steel.

Exterior surfaces of downspouts and exterior exposed surfaces of the scupper frame below deck shall be treated as specified on sheet 2 of 67.

The Contractor shall take appropriate measures to assure that Protective Coat is not applied to the scupper.

Cost of the grate, frame, downspout, nuts and washers including complete installation of the scupper shall be paid for at the contract unit price for Drainage Scuppers, DS-33.

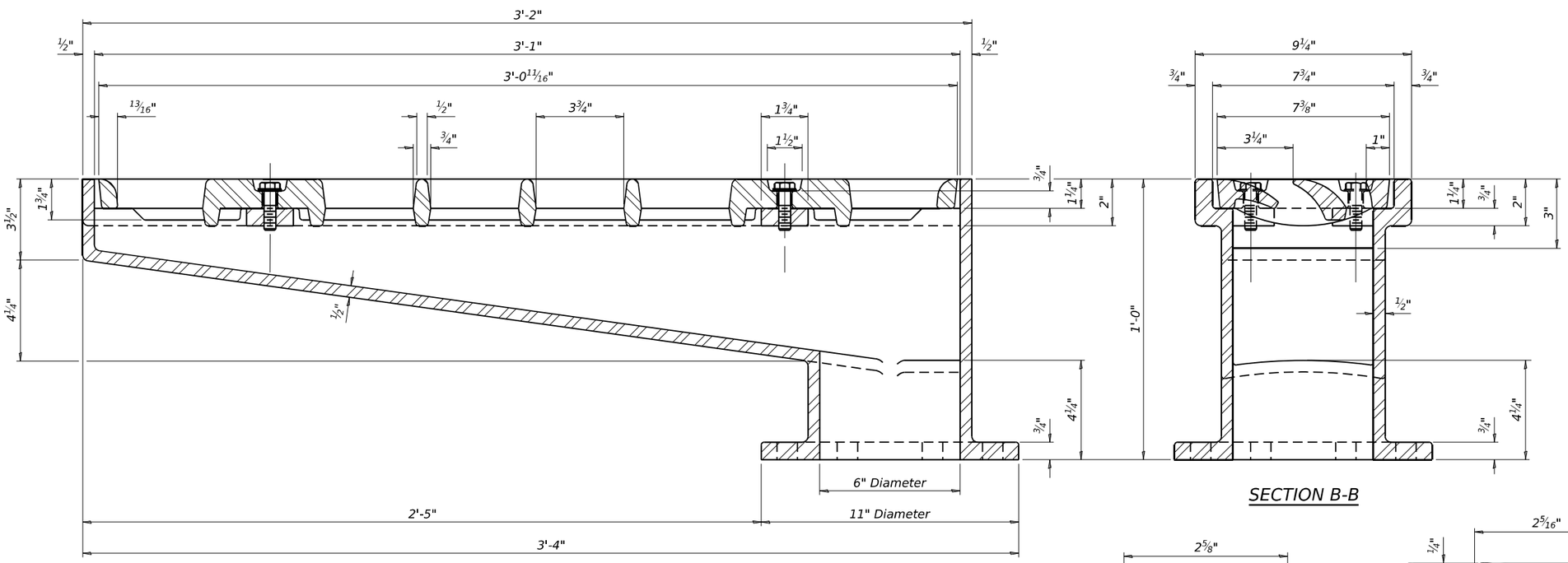

SECTION B-B

SECTION A-A

See sheet 29 of 67 for scupper location relative to parapet.

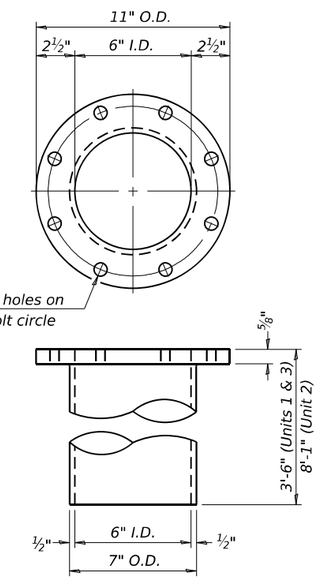

DOWNSPOUT

BILL OF MATERIAL

ITEM	UNIT	QUANTITY
Drainage Scuppers, DS-33	Each	8

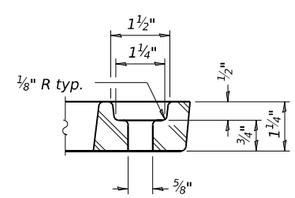

GRATE BOLT HOLE DETAIL

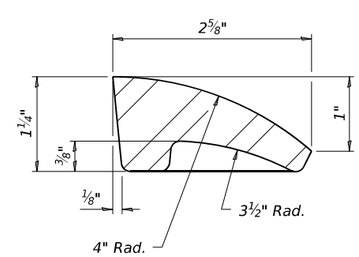

FIRST VANE DETAIL

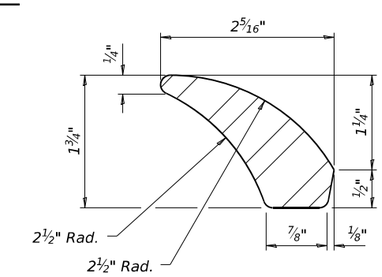

SECOND VANE DETAIL

DS-33 5-15-2023

FILE NAME: pw://cmtengp-pw.bentley.com:cmt-connect-projects/Documents/IDOT/21094103-00/410300/Bridge/Sangamon River Bridges/CADD_Sheets/0840018 & 0840019-72K98-038-Drainage Scupper, DS-33

CMT License No. 184-000613 © Copyright CMT, Inc.

USER NAME = bholland	DESIGNED - BLH	REVISED -	
	DRAWN - BLH	REVISED -	
PLOT SCALE = N/A	CHECKED - DH	REVISED -	
PLOT DATE = 3/21/2024	DATE - MARCH 2024	REVISED -	

STATE OF ILLINOIS
DEPARTMENT OF TRANSPORTATION

DRAINAGE SCUPPER, DS-33
STRUCTURE NO. 084-0018 (NB) & 084-0019 (SB)

SCALE: SHEET 38 OF 67 SHEETS STA. TO STA.

F.A.I. RTE.	SECTION	COUNTY	TOTAL SHEETS	SHEET NO.
55	(84-2BR-1)D,BY,BP,BRR	SANGAMON	139	80
		CONTRACT NO. 72K98		
		ILLINOIS FED. AID PROJECT		

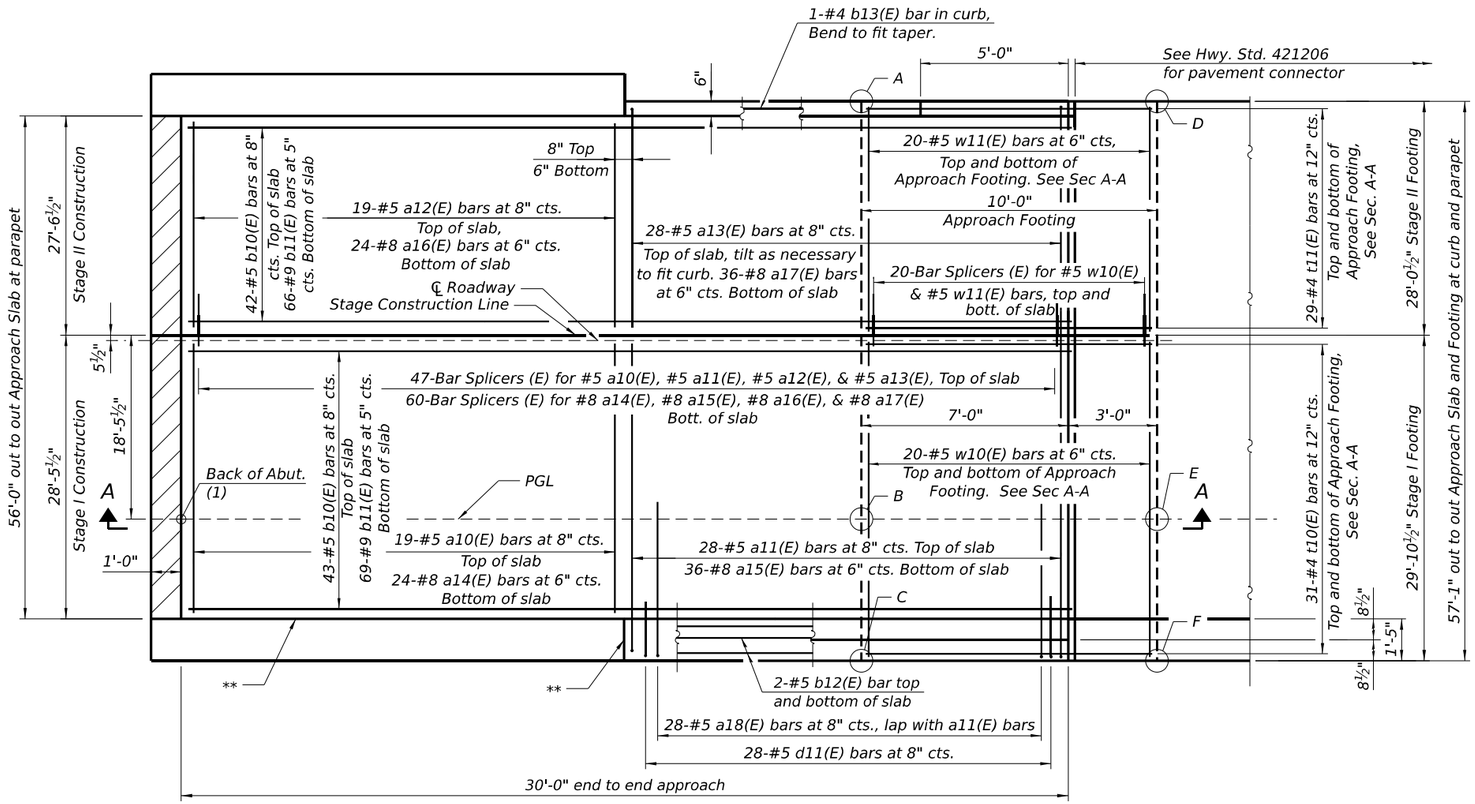

(1) Sta. 793+05.78 (S. approach)
Sta. 804+30.78 (N. approach)

SOUTHBOUND NORTH APPROACH PLAN

(SB north approach slab shown; NB south approach slab similar by 180° rotation)
(SB south approach symmetric along the E-W line; NB north approach slab symmetric about ℄ FAI Route 55 line)

** ½" Preformed Expansion Joint Filler according to Article 1051.09 of the Standard Specifications; full depth of slab, full length of parapet.

TOP AND BOTTOM ELEVATIONS FOR APPROACH FOOTING

SB South Approach			
Point	Location	Top	Bottom
A	NW corner	538.80	537.97
B	North PGL	539.37	538.54
C	NE corner	538.96	538.13
D	SW corner	538.78	537.95
E	North PGL	539.35	538.52
F	SW corner	538.94	538.11

NB South Approach			
Point	Location	Top	Bottom
A	NE corner	538.80	537.97
B	North PGL	539.37	538.54
C	NW corner	538.96	538.13
D	SE corner	538.78	537.95
E	North PGL	539.35	538.52
F	SW corner	538.94	538.11

SB North Approach			
Point	Location	Top	Bottom
A	SW corner	538.79	537.96
B	South PGL	539.36	538.53
C	SE corner	538.95	538.12
D	NW corner	538.76	537.93
E	North PGL	539.33	538.50
F	NE corner	538.93	538.10

NB North Approach			
Point	Location	Top	Bottom
A	SE corner	538.79	537.96
B	South PGL	539.36	538.53
C	SW corner	538.95	538.12
D	NE corner	538.76	537.93
E	North PGL	539.33	538.50
F	NW corner	538.93	538.10

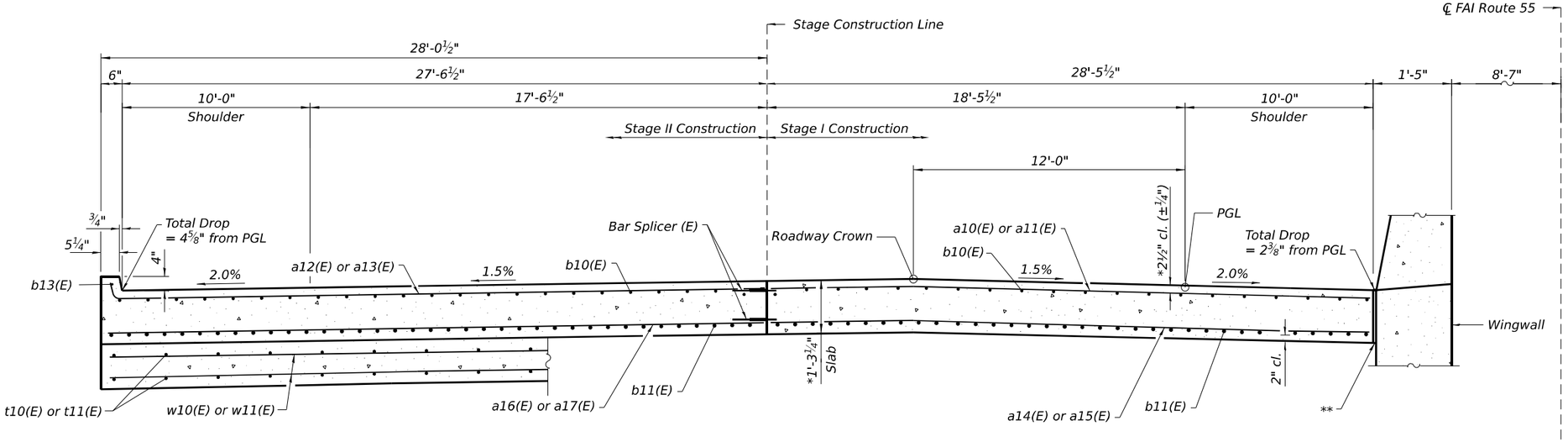

AT APPROACH FOOTING

CROSS SECTION

(Looking North)

NEAR ABUTMENT

* Prior to grinding

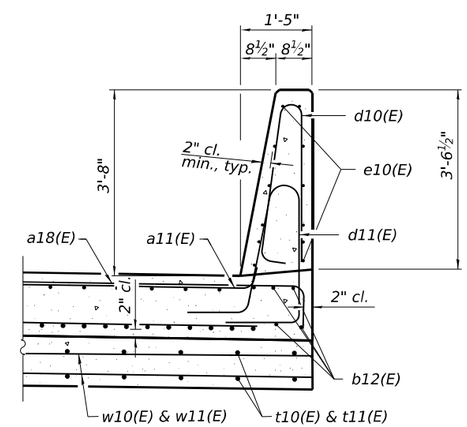

PARAPET AND SLAB SECTION NEAR APPROACH FOOTING

FILE NAME: pw://cmtengp-pw.bentley.com:cmt-connect-projects/Documents/IDOT/21094103-00/410300/Bridge/Sangamon River Bridges/CADD_Sheets/0840018 & 0840019-72K98-039-North & South Approach Slab Plan

CMT
License No. 184-000613 © Copyright CMT, Inc.

USER NAME = bholland	DESIGNED - VT	REVISED -	
	DRAWN - VT	REVISED -	
PLOT SCALE = N/A	CHECKED - DH	REVISED -	
PLOT DATE = 3/21/2024	DATE - MARCH 2024	REVISED -	

STATE OF ILLINOIS
DEPARTMENT OF TRANSPORTATION

NORTH & SOUTH APPROACH SLAB PLAN
STRUCTURE NO. 084-0018 (NB) & 084-0019 (SB)

SCALE: | SHEET 39 OF 67 SHEETS | STA. TO STA.

F.A.I. RTE.	SECTION	COUNTY	TOTAL SHEETS	SHEET NO.
55	(84-2BR-1)D,BY,BP,BRR	SANGAMON	139	81
		CONTRACT NO. 72K98		
		ILLINOIS FED. AID PROJECT		

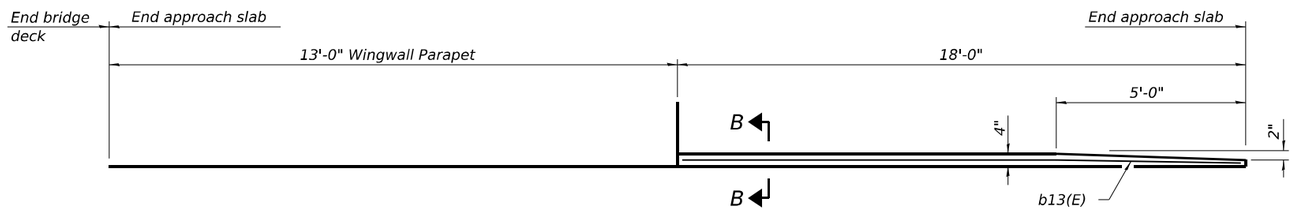

INSIDE ELEVATION OF WEST PARAPET AND CURB

(SB North Approach shown. NB South Approach similar by 180° rotation)
(SB south approach symmetric along the E-W line; NB north approach slab symmetric about ℄ FAI Route 55 line)

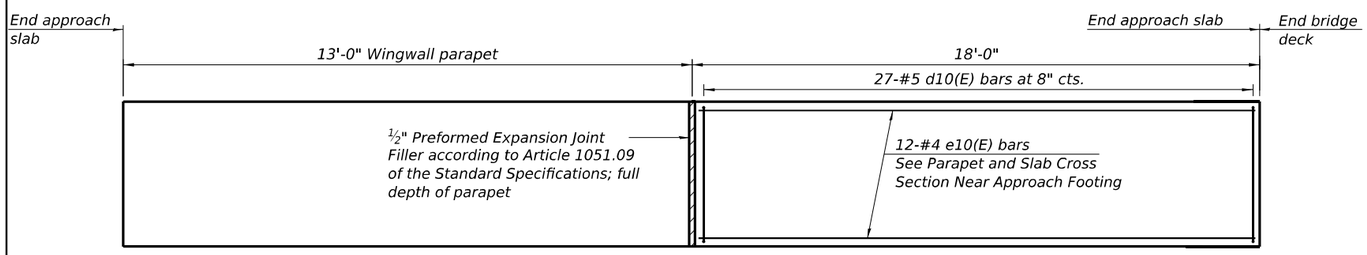

INSIDE ELEVATION OF EAST PARAPET

(SB North Approach shown. NB South Approach similar by 180° rotation)
(SB south approach symmetric along the E-W line; NB north approach slab symmetric about ℄ FAI Route 55 line)

Notes:

1. The joint opening shall be adjusted for temperature per Article 520.04 of the Standard Specifications. However, since this detail is for jointless structures, the length of bridge used to calculate the adjustment shall be equal to half the total bridge length plus the length of the bridge approach slab.
2. Parapet concrete shall be paid for as Concrete Superstructure.
3. Approach slab shall be paid for as Concrete Superstructure (Approach Slab).
4. Approach footing concrete shall be paid for as Concrete Structures.
5. The approach footing maximum applied service bearing pressure (Qmax) = 2.0 ksf.
6. Cost of excavation for approach footing included with Concrete Structures.

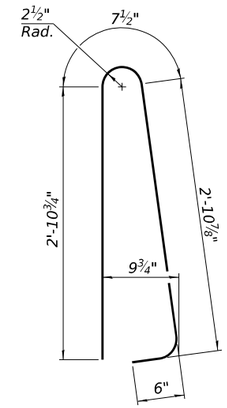

BAR d10(E)

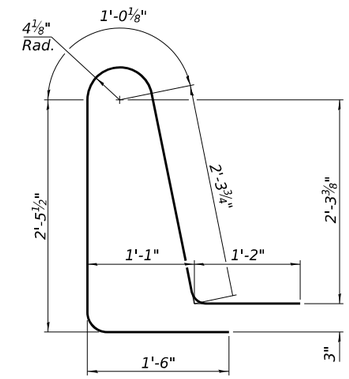

BAR d11(E)

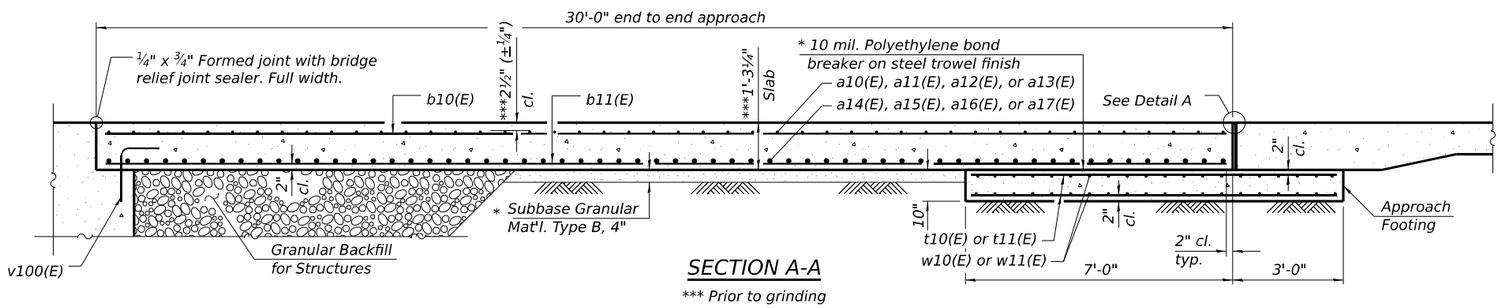

SECTION A-A

*** Prior to grinding

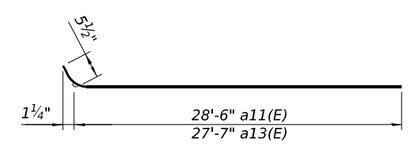

BAR a11(E) & a13(E)

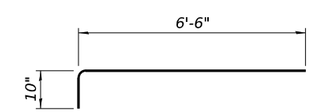

BAR a18(E)

FOUR APPROACHES BILL OF MATERIAL

Bar	No.	Size	Length	Shape
a10(E)	76	#5	28'-1"	
a11(E)	112	#5	29'-0"	
a12(E)	76	#5	27'-2"	
a13(E)	112	#5	28'-1"	
a14(E)	96	#8	28'-1"	
a15(E)	144	#8	29'-7"	
a16(E)	96	#8	27'-4"	
a17(E)	144	#8	27'-9"	
a18(E)	112	#5	7'-4"	
b10(E)	340	#5	29'-8"	
b11(E)	540	#9	29'-8"	
b12(E)	16	#5	17'-8"	
b13(E)	4	#4	17'-8"	
d10(E)	108	#5	7'-0"	
d11(E)	112	#5	8'-6"	
e10(E)	48	#4	17'-8"	
t10(E)	248	#4	9'-8"	
t11(E)	232	#4	9'-8"	
w10(E)	160	#5	29'-7"	
w11(E)	160	#5	27'-9"	
Concrete Structures		Cu. Yd.	70.5	
Concrete Superstructure		Cu. Yd.	10.2	
Protective Coat		Sq. Yd.	861	
Concrete Superstructure (Approach Slab)		Cu. Yd.	314.8	
Reinforcement Bars, Epoxy Coated		Pound	128,500	
Bar Splicers		Each	508	
Bridge Deck Grooving (Longitudinal)		Sq. Yd.	496	
Diamond Grinding (Bridge Section)		Sq. Yd.	717	

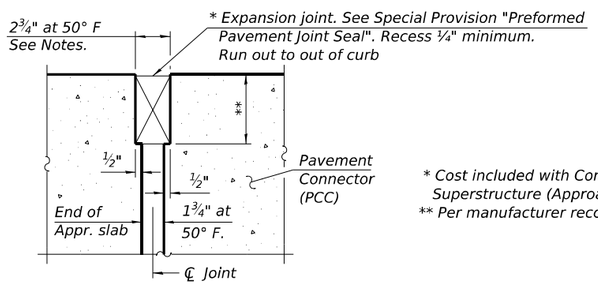

DETAIL A

* Cost included with Concrete Superstructure (Approach Slab).
** Per manufacturer recommendations

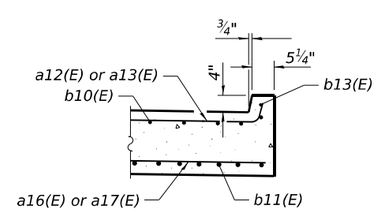

SECTION B-B

FILE NAME: pw://cmtengi-pw.sentiey.com:cmt-connect-projects/Documents/IDOT/21004103-00/410300/Bridge/Sangamon River Bridges/CADD_Sheets/0840018 & 0840019-72K98-010-North & South Approach Slab Details

CMT License No. 184-000613 © Copyright CMT, Inc.

USER NAME = bholland	DESIGNED - VT	REVISED -	
	DRAWN - VT	REVISED -	
PLOT SCALE = N/A	CHECKED - DH	REVISED -	
PLOT DATE = 3/21/2024	DATE - MARCH 2024	REVISED -	

STATE OF ILLINOIS
DEPARTMENT OF TRANSPORTATION

NORTH & SOUTH APPROACH SLAB DETAILS
STRUCTURE NO. 084-0018 (NB) & 084-0019 (SB)

SCALE: | SHEET 40 OF 67 SHEETS | STA. | TO STA.

F.A.I. RTE.	SECTION	COUNTY	TOTAL SHEETS	SHEET NO.
55	(84-2BR-1)D,BY,BP,BRR	SANGAMON	139	82
		CONTRACT NO. 72K98		
		ILLINOIS	FED. AID PROJECT	

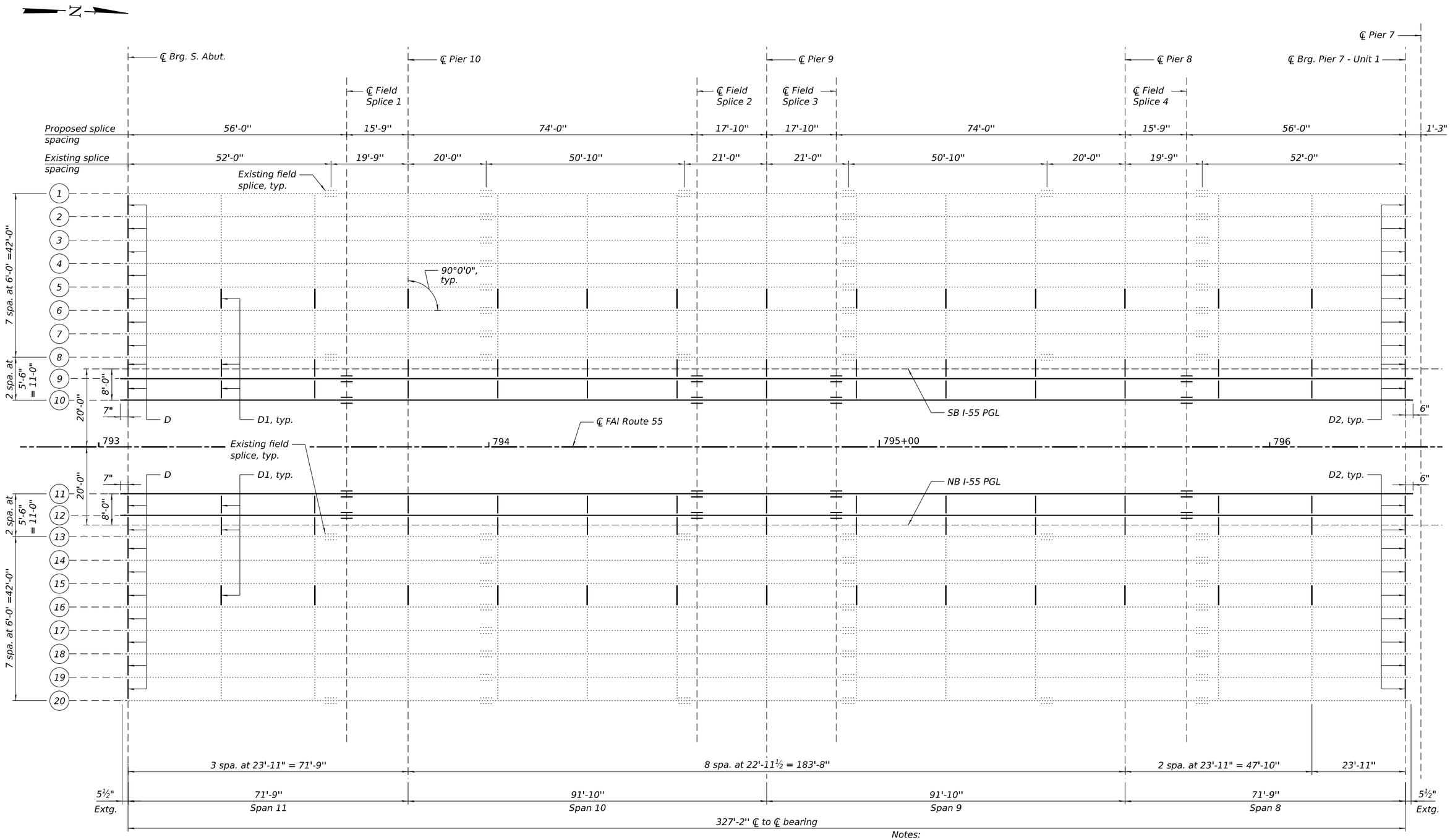

FRAMING PLAN - UNIT 1

Notes:
1. See sheet 44 of 67 for field splice details and Section A-A.
2. See sheet 47 of 67 for diaphragm details.
3. D denotes "Diaphragm."
4. All cross frames or diaphragms shall be installed as steel is erected and secured with erection pins and bolts except as otherwise noted. Individual cross frames or diaphragms at supports may be temporarily disconnected to install bearing anchor bolts.

FILE NAME: pw://centeniq-pw.bentley.com:cmt-connect-projects/Documents/IDOT/21004103-00/410300/Bridge/Sangamon River Bridges/CADD_Sheets/0840015 & 0840018 & 0840015-72K98-043-Framing Plan - I

CMT
License No. 184-002613 © Copyright CMT, Inc.

USER NAME = bholland	DESIGNED - MAC	REVISED -	
	DRAWN - MAC	REVISED -	
PLOT SCALE = N/A	CHECKED - DH	REVISED -	
PLOT DATE = 3/21/2024	DATE - MARCH 2024	REVISED -	

STATE OF ILLINOIS
DEPARTMENT OF TRANSPORTATION

FRAMING PLAN - I
STRUCTURE NO. 084-0018 (NB) & 084-0019 (SB)

SCALE: | SHEET 41 OF 67 SHEETS | STA. | TO STA.

F.A.I. RTE.	SECTION	COUNTY	TOTAL SHEETS	SHEET NO.
55	(84-2BR-1)D,BY,BP,BRR	SANGAMON	139	83
		CONTRACT NO. 72K98		
		ILLINOIS FED. AID PROJECT		

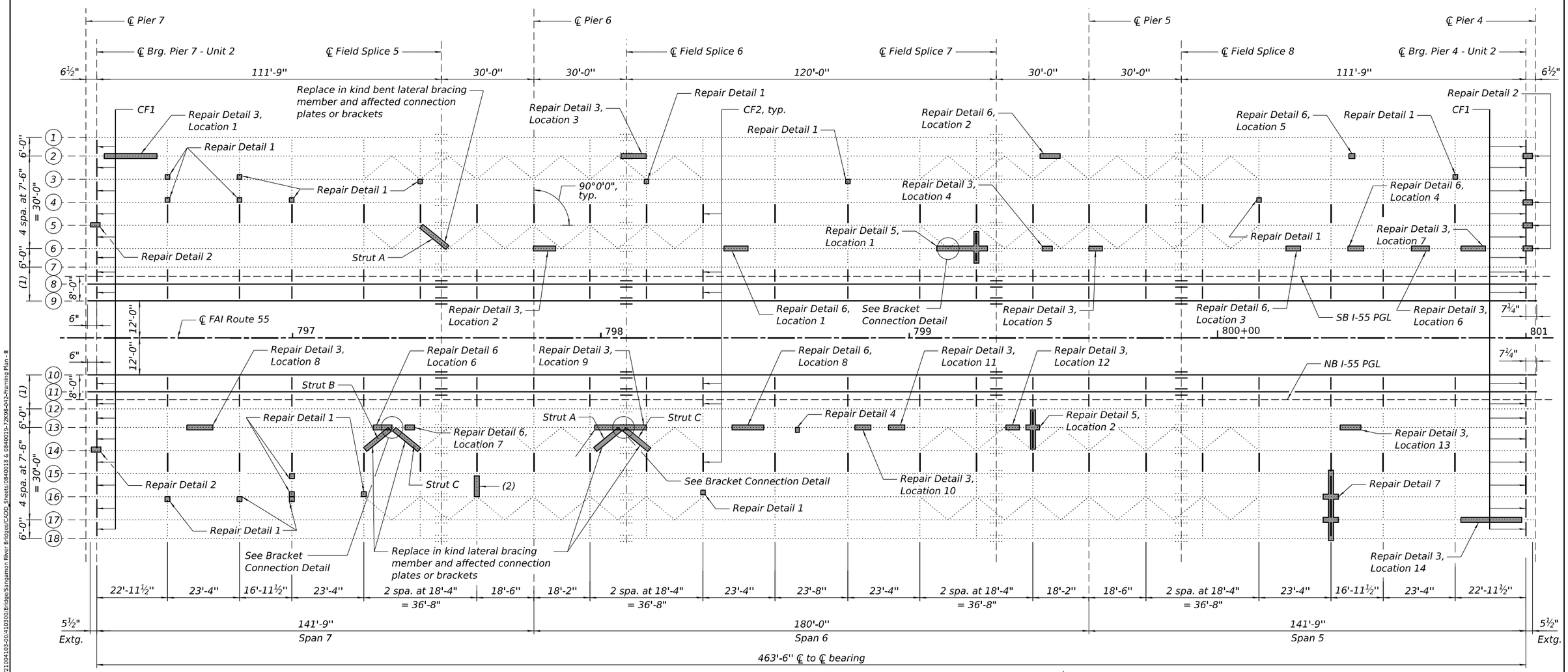

(1) 2 spa. at 5'-6" = 11'-0"
(2) Replace in kind bottom chord member 2L 3½ X 3 X 5/16, field verify existing hole spacing for connection to ⅜" plate

FRAMING PLAN - UNIT 2

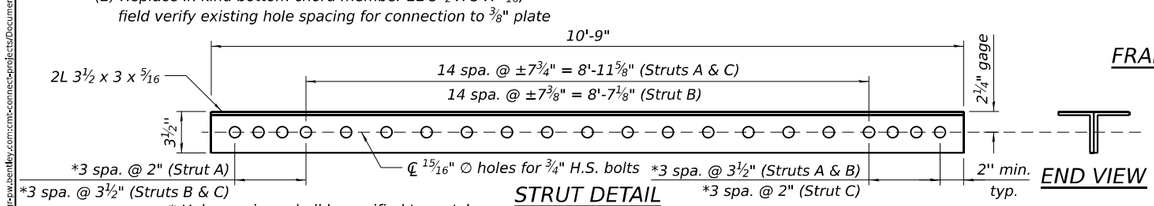

* Hole spacings shall be verified to match existing hole spacings at bracket connections

STRUT DETAIL
(Looking North)

END VIEW

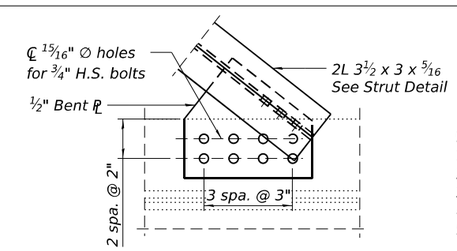

BRACKET CONNECTION DETAIL

Notes:
1. See sheet 45 of 67 for field splice details and Section A-A.
2. See sheet 48 of 67 for cross frame details.
3. CF denotes "Cross Frame."
4. See sheets 49 and 50 of 67 for repair details.
5. All cross frames or diaphragms shall be installed as steel is erected and secured with erection pins and bolts except as otherwise noted. Individual cross frames or diaphragms at supports may be temporarily disconnected to install bearing anchor bolts.

FILE NAME: pw://cmtengrgw.bentley.com:cmt-connect-projects/Documents/IDOT21094103-00410300/Bridge/Sangamon River Bridges/CADD_Sheets/0840018 & 0840019-72K98-0424-Framing Plan - II

CMT
License No. 184-000813 © Copyright CMT, Inc.

USER NAME = bholland	DESIGNED - MAC	REVISED -	
	DRAWN - MAC	REVISED -	
PLOT SCALE = N/A	CHECKED - DH	REVISED -	
PLOT DATE = 3/21/2024	DATE - MARCH 2024	REVISED -	

STATE OF ILLINOIS
DEPARTMENT OF TRANSPORTATION

FRAMING PLAN - II
STRUCTURE NO. 084-0018 (NB) & 084-0019 (SB)

SCALE: | SHEET 42 OF 67 SHEETS | STA. | TO STA.

F.A.I. RTE.	SECTION	COUNTY	TOTAL SHEETS	SHEET NO.
55	(84-2BR-1)D,BY,BP,BRR	SANGAMON	139	84
		CONTRACT NO. 72K98		
		ILLINOIS FED. AID PROJECT		

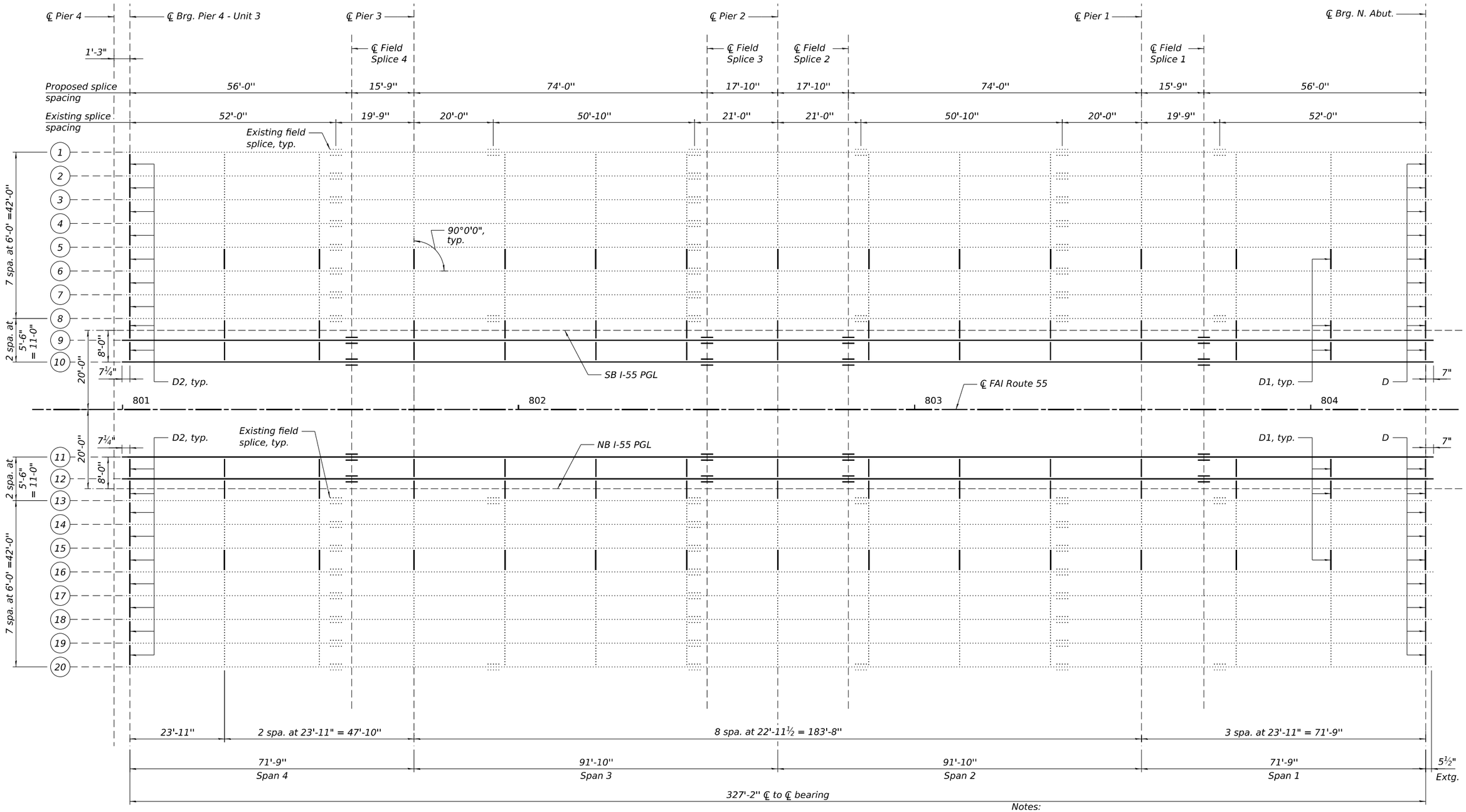

FRAMING PLAN - UNIT 3

Notes:
1. See sheet 44 of 67 for field splice details and Section A-A.
2. See sheet 47 of 67 for diaphragm details.
3. D denotes "Diaphragm."
4. All cross frames or diaphragms shall be installed as steel is erected and secured with erection pins and bolts except as otherwise noted. Individual cross frames or diaphragms at supports may be temporarily disconnected to install bearing anchor bolts.

FILE NAME: pw://centerpiew.bentley.com:cmt-connect-projects/Documents/IDOT/21004103-00/410300/Bridge/Sangamon River Bridges/CADD_Sheets/0840018 & 0840015-72K98-043-Framing Plan - III

CMT
License No. 184-000613
© Copyright CMT, Inc.

USER NAME = bholland	DESIGNED - MAC	REVISED -	
	DRAWN - MAC	REVISED -	
PLOT SCALE = N/A	CHECKED - DH	REVISED -	
PLOT DATE = 3/21/2024	DATE - MARCH 2024	REVISED -	

STATE OF ILLINOIS
DEPARTMENT OF TRANSPORTATION

FRAMING PLAN - III
STRUCTURE NO. 084-0018 (NB) & 084-0019 (SB)

SCALE: | SHEET 43 OF 67 SHEETS | STA. | TO STA.

F.A.I. RTE.	SECTION	COUNTY	TOTAL SHEETS	SHEET NO.
55	(84-2BR-1)D,BY,BP,BRR	SANGAMON	139	85
		CONTRACT NO. 72K98		
		ILLINOIS	FED. AID PROJECT	

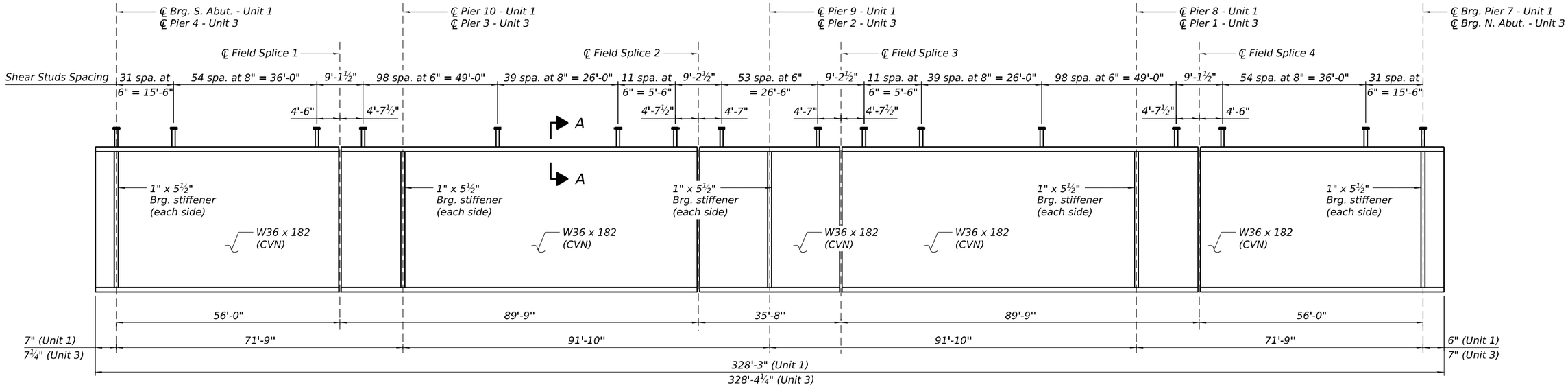

BEAMS 9 THRU 12 ELEVATION - UNITS 1 & 3

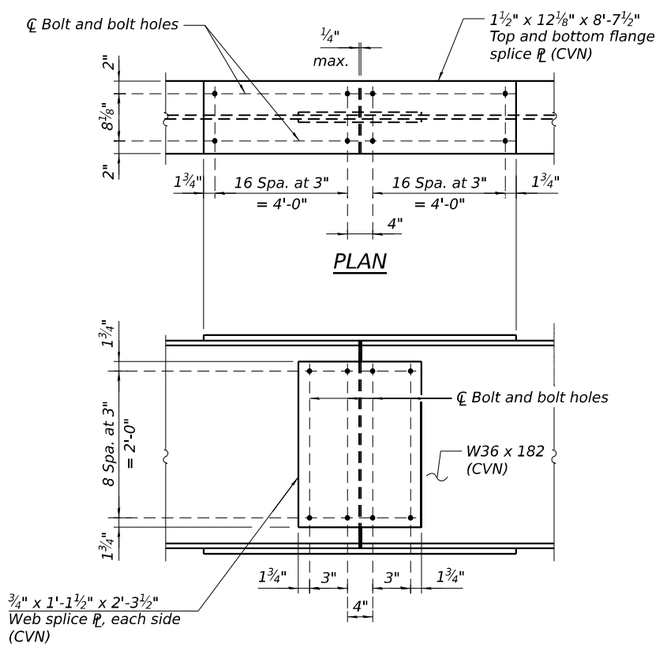

PLAN

ELEVATION

SPLICE DETAIL

Field Splice 1 thru 4
(32 Required)

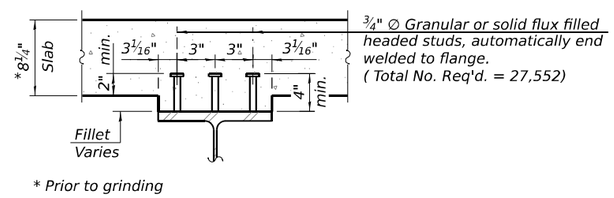

SECTION A-A

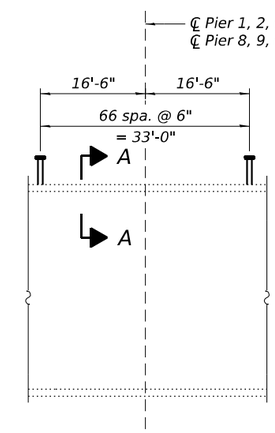

SHEAR STUD SPACING AT EXISTING BEAMS 1, 8. 13 & 20

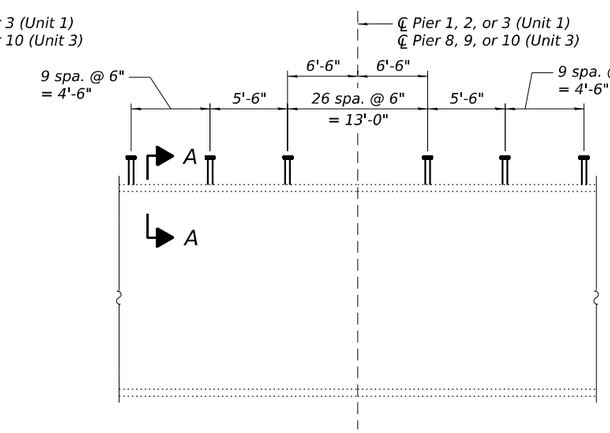

SHEAR STUD SPACING AT EXISTING BEAMS 2 THRU 7 & 14 THRU 19

TOP OF BEAM ELEVATIONS

(For fabrication only)

Unit 1	Beam 10 / 11	Beam 9 / 12
℄ Brg. S. Abut.	539.61	539.72
℄ Field Splice 1	539.61	539.72
℄ Pier 10	539.64	539.75
℄ Field Splice 2	539.78	539.89
℄ Pier 9	539.80	539.91
℄ Field Splice 3	539.83	539.94
℄ Pier 8	539.91	540.02
℄ Field Splice 4	539.92	540.03
℄ Brg. Pier 7	540.08	540.19

Unit 3	Beam 10 / 11	Beam 9 / 12
℄ Brg. Pier 4	540.08	540.19
℄ Field Splice 1	539.91	540.02
℄ Pier 3	539.90	540.01
℄ Field Splice 2	539.82	539.93
℄ Pier 2	539.79	539.90
℄ Field Splice 3	539.77	539.88
℄ Pier 1	539.63	539.74
℄ Field Splice 4	539.60	539.71
℄ Brg. N. Abut.	539.60	539.71

Notes:
1. Load carrying components designated "CVN" shall conform to the Charpy-V-Notch Impact Energy Requirement, Zone 2.
2. For Bearing Stiffener details, see sheet 47 of 67.
3. Rolled beams, bearing stiffeners, and splice plates shall be AASHTO M270, Grade 50.

CMT
License No. 184-002613

USER NAME = bholland	DESIGNED - MAC	REVISED -	
	DRAWN - MAC	REVISED -	
PLOT SCALE = N/A	CHECKED - DH	REVISED -	
PLOT DATE = 3/21/2024	DATE - MARCH 2024	REVISED -	

STATE OF ILLINOIS
DEPARTMENT OF TRANSPORTATION

BEAM ELEVATION
STRUCTURE NO. 084-0018 (NB) & 084-0019 (SB)

SCALE: | SHEET 44 OF 67 SHEETS | STA. | TO STA.

F.A.I. RTE.	SECTION	COUNTY	TOTAL SHEETS	SHEET NO.
55	(84-2BR-1)D,BY,BP,BRR	SANGAMON	139	86
		CONTRACT NO. 72K98		
		ILLINOIS	FED. AID PROJECT	

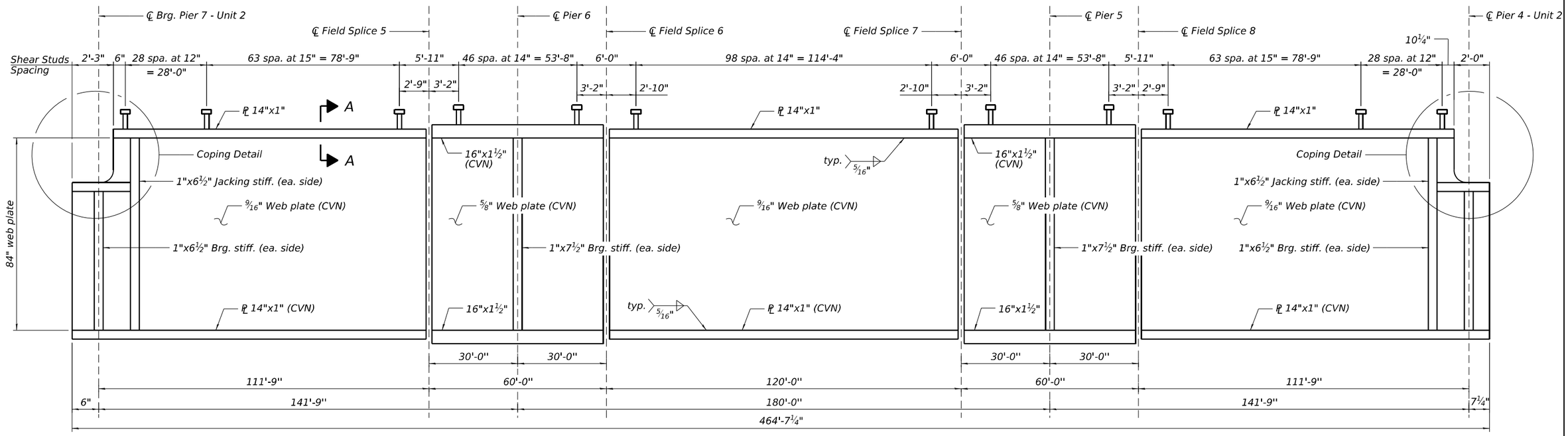

GIRDERS 8 THRU 11 ELEVATION - UNIT 2

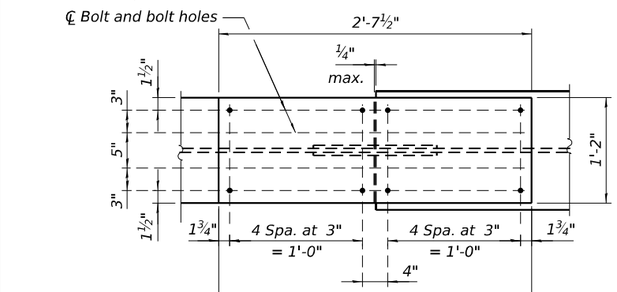

TOP AND BOTTOM FLANGE

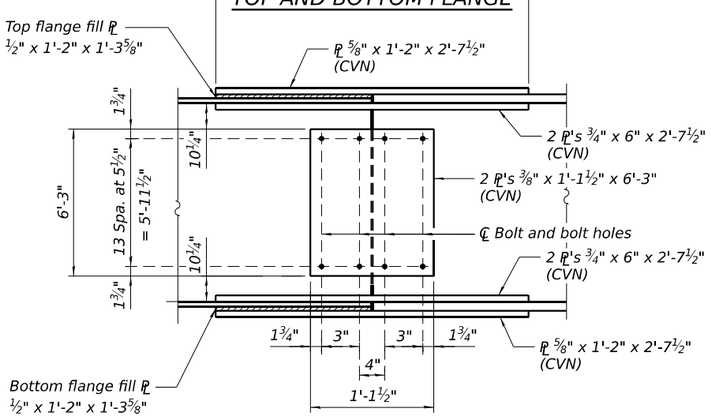

ELEVATION

SPLICE DETAIL

(Field Splice 5 thru 8)
(32 Required)

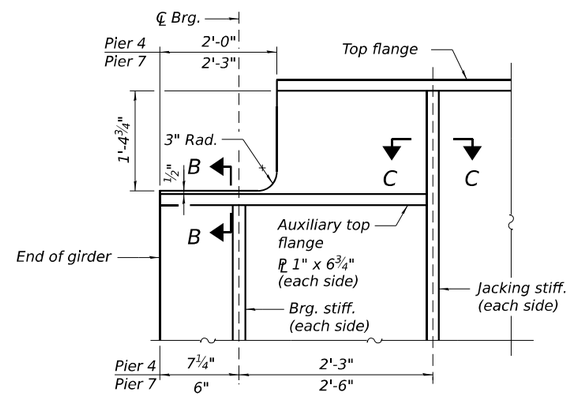

COPING DETAIL

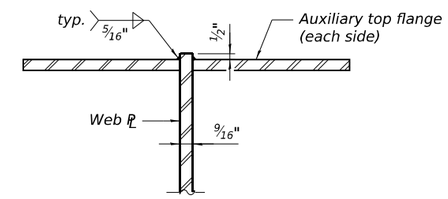

SECTION B-B

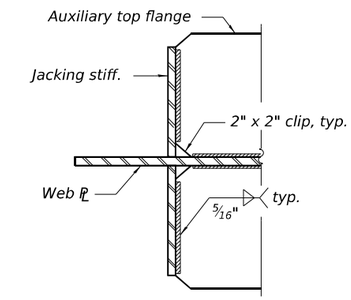

SECTION C-C

TOP OF WEB ELEVATIONS

(For fabrication only)

Unit 2	Girder 9	Girder 8
	10	11
℄ Brg. Pier 7	539.98	540.09
℄ Field Splice 5	539.99	540.10
℄ Pier 6	540.00	540.11
℄ Field Splice 6	540.01	540.12
℄ Field Splice 7	540.01	540.12
℄ Pier 5	540.00	540.11
℄ Field Splice 8	539.99	540.10
℄ Brg. Pier 4	539.98	540.09

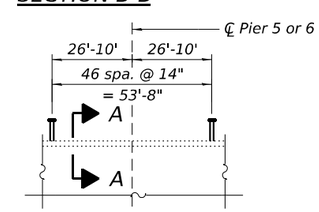

SHEAR STUD SPACING AT EXISTING GIRDERS 1, 7, 12 & 18

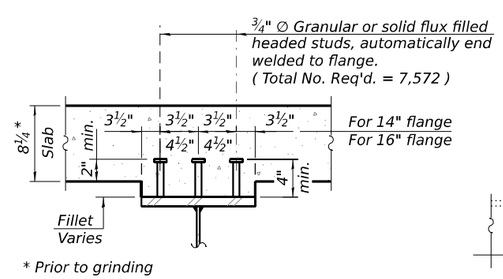

* Prior to grinding

SECTION A-A

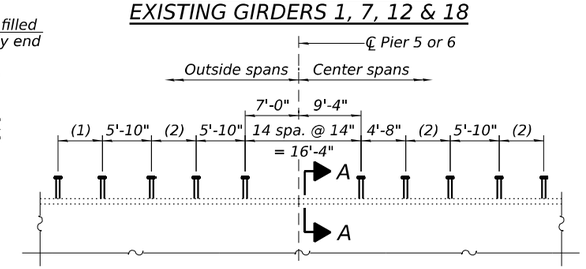

(1) 4 spa. @ 14" = 4'-8"
(2) 3 spa. @ 14" = 3'-6"

SHEAR STUD SPACING AT EXISTING GIRDERS 2 THRU 6 & 13 THRU 17

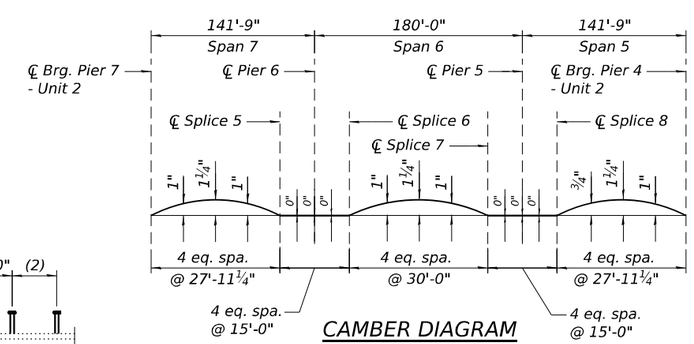

CAMBER DIAGRAM

Notes:
1. Plate girders, bearing & jacking stiffeners, auxiliary top flanges, and splice plates (excluding fill plates) shall be AASHTO M270 Grade 50.
2. Load carrying components designated "CVN" shall conform to the Charpy-V-Notch Impact Energy Requirement, Zone 2.
3. For Bearing Stiffener details see sheet 48 of 67.

FILE NAME: pw://cmtengi-pw.bentley.com:cmtc-connect-projects/Documents/IDOT21004103-00/410300/Bridge/Sangamon River Bridges/CADD_Sheets/0840018 & 0840019-72K98-045-Girder Elevation

CMT
License No. 184-000613

USER NAME = bholland	DESIGNED - MAC	REVISED -	
	DRAWN - MAC	REVISED -	
PLOT SCALE = N/A	CHECKED - DH	REVISED -	
PLOT DATE = 3/21/2024	DATE - MARCH 2024	REVISED -	

STATE OF ILLINOIS
DEPARTMENT OF TRANSPORTATION

GIRDER ELEVATION
STRUCTURE NO. 084-0018 (NB) & 084-0019 (SB)

SCALE: | SHEET 45 OF 67 SHEETS | STA. | TO STA.

F.A.I. RTE.	SECTION	COUNTY	TOTAL SHEETS	SHEET NO.
55	(84-2BR-1)D,BY,BP,BRR	SANGAMON	139	87
		CONTRACT NO. 72K98		
		ILLINOIS	FED. AID PROJECT	

BEAM MOMENT TABLE - UNITS 1 & 3									
Unit 1		0.4 Sp. 11 or 0.6 Sp. 8		Pier 8 or Pier 10		0.5 Sp. 9 & Sp. 10		Pier 9	
Unit 3		0.4 Sp. 4 or 0.6 Sp. 1		Pier 1 or Pier 3		0.5 Sp. 2 & Sp. 3		Pier 2	
		Beam 9 & 12	Beam 10 & 11	Beam 9 & 12	Beam 10 & 11	Beam 9 & 12	Beam 10 & 11	Beam 9 & 12	Beam 10 & 11
Is	(in⁴)	11300	11300	11300	11300	11300	11300	11300	11300
Ic(n)	(in⁴)	28512	29413	13896	14185	28512	29413	13896	14185
Ic(3n)	(in⁴)	20569	21326	13896	14185	20569	21326	13896	14185
Ss	(in³)	623	623	623	623	623	623	623	623
Sc(n)	(in³)	911	919	694	702	911	919	694	702
Sc(3n)	(in³)	813	824	694	702	813	824	694	702
Z	(in³)	718	718	--	--	718	718	--	--
wD	(k/')	0.78	0.85	0.78	0.85	0.78	0.85	0.78	0.85
MD	('k)	270	293	511	556	281	305	546	593
sD	(k/')	0.33	0.33	0.33	0.33	0.33	0.33	0.33	0.33
MsD	('k)	115	115	222	222	118	118	237	237
ML	('k)	413	525	384	488	435	552	420	533
MIM	('k)	105	133	93	118	100	127	97	123
5/3 [ML + I]	('k)	863	1097	795	1010	892	1132	862	1093
Ma	('k)	1623	1956	1986	2324	1678	2022	2138	2500
* Mu	('k)	4039	3963	--	--	4292	4397	--	--
f s D non-comp	(ksi)	5.20	5.65	9.85	10.70	5.41	5.88	10.51	11.42
f s D (comp)	(ksi)	1.70	1.68	3.84	3.80	1.75	1.72	4.09	4.05
f s 5/3[ML + MI]	(ksi)	11.38	14.31	13.74	17.28	11.75	14.77	14.89	18.70
f s (Overload)	(ksi)	18.28	21.64	27.43	31.78	18.91	22.37	29.49	34.17
** f s (Total)	(ksi)	--	--	35.66	41.31	--	--	38.34	44.42
VR	(k)	35.31	44.84	46.02	58.45	35.37	44.92	44.72	56.8

GIRDER MOMENT TABLE - UNIT 2							
		0.4 Sp. 4 or 0.6 Sp. 6		Pier 5 or Pier 6		0.5 Sp. 5	
		Girder 8 & 11	Girder 9 & 10	Girder 8 & 11	Girder 9 & 10	Girder 8 & 11	Girder 9 & 10
Is	(in⁴)	78360	78360	118602	118602	78360	78360
Ic(n)	(in⁴)	155566	160307	128299	129421	155566	160307
Ic(3n)	(in⁴)	116922	120378	128299	129421	116922	120378
Ss	(in³)	1822	1822	2726	2726	1822	1822
Sc(n)	(in³)	2401	2424	2823	2833	2401	2424
Sc(3n)	(in³)	2169	2193	2823	2833	2169	2193
Z	(in³)	--	--	--	--	--	--
wD	(k/')	0.852	0.918	0.941	1.007	0.852	0.918
MD	('k)	1079	1164	2421	2611	1016	1097
sD	(k/')	0.346	0.346	0.346	0.346	0.346	0.346
MsD	('k)	444	445	975	974	429	429
ML	('k)	920	1168	1293	1642	954	1212
MIM	('k)	172	219	226	287	156	198
5/3 [ML + I]	('k)	1820	2312	2532	3215	1850	2350
Ma	('k)	4346	5096	7706	8840	4283	5038
* Mu	('k)	--	--	--	--	--	--
f s D non-comp	(ksi)	7.11	7.66	10.66	11.49	6.69	7.22
f s D (comp)	(ksi)	2.46	2.43	4.14	4.13	2.37	2.35
f s 5/3[ML + MI]	(ksi)	9.10	11.45	10.76	13.62	9.25	11.63
f s (Overload)	(ksi)	18.66	21.54	25.56	29.24	18.31	21.20
** f s (Total)	(ksi)	24.26	28.01	33.23	38.01	23.80	27.57
VR	(k)	40.25	51.12	57.27	72.73	39.82	50.58

Is, Ss: Non-composite moment of inertia and section modulus of the steel section used for computing f s(Total and Overload) due to non-composite dead loads (in.⁴ and in.³).

Ic(n), Sc(n): Composite moment of inertia and section modulus of the steel and deck based upon the modular ratio, "n", used for computing f s(Total and Overload) due to short-term composite live loads (in.⁴ and in.³).

Ic(3n), Sc(3n): Composite moment of inertia and section modulus of the steel and deck based upon 3 times the modular ratio, "3n", used for computing f s(Total and Overload) due to long-term composite (superimposed) dead loads (in.⁴ and in.³).

Z: Plastic Section Modulus of the steel section in non-composite areas (in.³).

wD: Un-factored non-composite dead load (kips/ft.).

MD: Un-factored moment due to non-composite dead load (kip-ft.).

sD: Un-factored long-term composite (superimposed) dead load (kips/ft.)

MsD: Un-factored moment due to long-term composite (superimposed) dead load (kip-ft.).

ML: Un-factored live load moment (kip-ft.).

MI: Un-factored moment due to impact (kip-ft.).

Ma: Factored design moment (kip-ft.).
1.3 [MD + MsD + $\frac{5}{3}$ (ML + MI)]

Mu: Compact composite moment capacity according to AASHTO LFD 10.50.1.1 or compact non-composite moment capacity according to AASHTO LFD 10.48.1 (kip-ft.).

f s (Overload): Sum of stresses as computed from the moments below (ksi).
MD + MsD + $\frac{5}{3}$ (ML + MI)

f s (Total): Sum of stresses as computed from the moments below on non-compact section (ksi).
1.3 [MD + MsD + $\frac{5}{3}$ (ML + MI)]

VR: Maximum L + impact shear range within the composite portion of the span for stud shear connector design (kips).

BEAM REACTION TABLE - UNITS 1 & 3									
Unit 1		S. Abut.		Pier 8 or Pier 10		Pier 9		Pier 7	
Unit 3		N. Abut.		Pier 1 or Pier 3		Pier 2		Pier 4	
		Beam 9 & 12	Beam 10 & 11	Beam 9 & 12	Beam 10 & 11	Beam 9 & 12	Beam 10 & 11	Beam 9 & 12	Beam 10 & 11
R D	(k)	29.92	31.76	99.46	105.50	101.88	108.07	29.92	31.76
R L	(k)	30.29	38.47	44.48	56.49	46.10	58.54	30.29	38.47
R I	(k)	7.70	9.78	10.76	13.66	10.63	13.50	7.70	9.78
R Total	(k)	67.91	80.01	154.70	175.65	158.61	180.11	67.91	80.01

GIRDER REACTION TABLE - UNIT 2					
		Pier 4 or Pier 7		Pier 5 or Pier 6	
		Girder 8 & 11	Girder 9 & 10	Girder 8 & 11	Girder 9 & 10
R D	(k)	61.32	64.77	219.94	231.99
R L	(k)	33.69	42.78	74.59	94.73
R I	(k)	6.31	8.02	13.05	16.57
R Total	(k)	101.32	115.57	307.58	343.29

* Compact section
** Braced non-compact and partially braced section

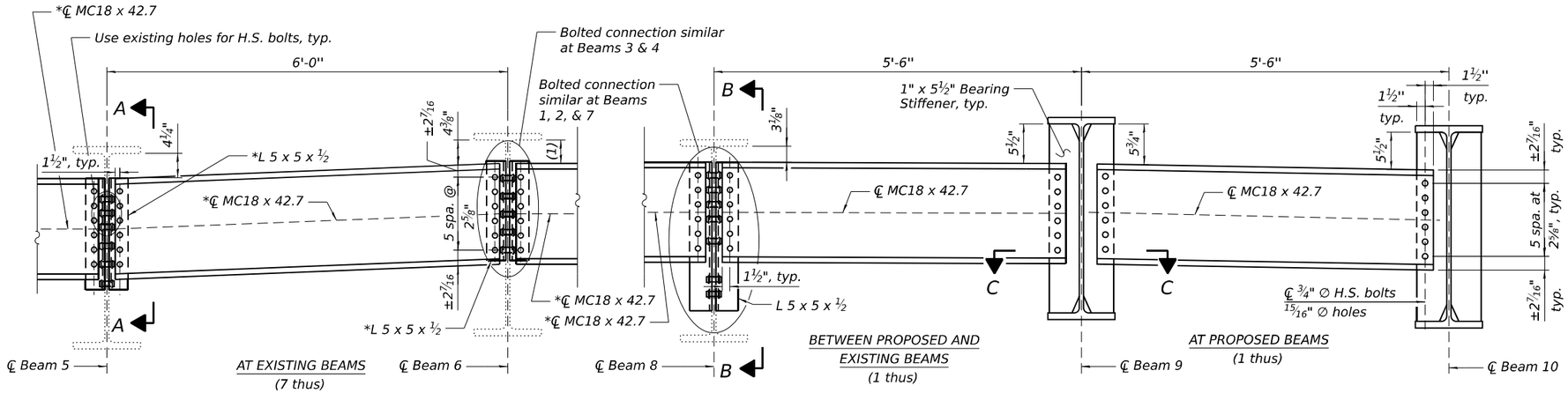

(1) 3" Beams 1 & 2
4¼" Beam 3
5" Beam 4

* Remove existing connection angles and diaphragm member between the indicated beams to replace with sections and members indicated.

ABUTMENT DIAPHRAGM - D

(Looking north)
(SB shown, NB symmetrical about ℄ FAI Route 55)

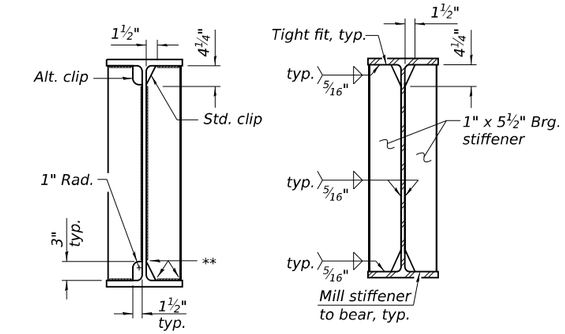

WELD LIMITS AND CLIP DETAILS

SECTION AT BEARING STIFFENER

** Stop welds ¼" (±⅛") from edges as shown, typ.

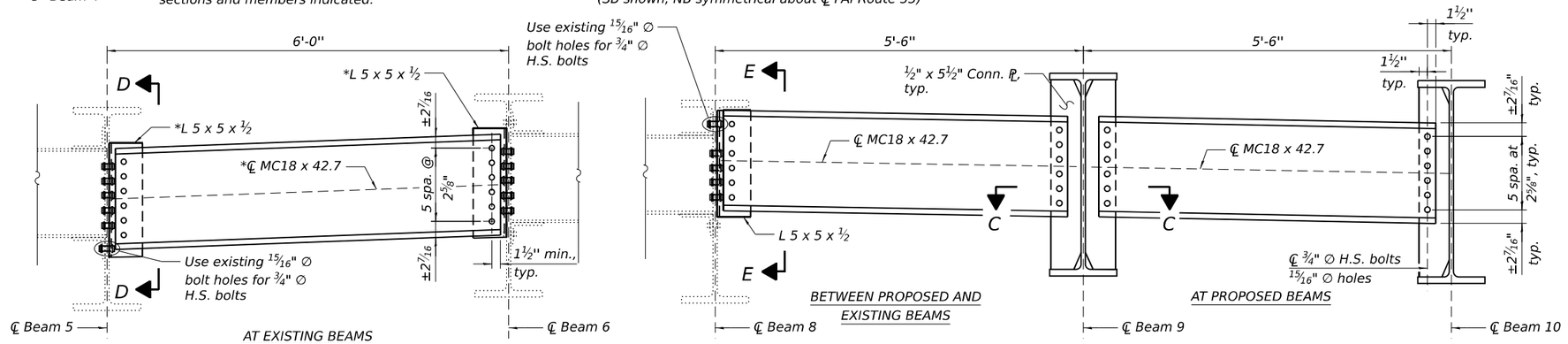

INTERIOR DIAPHRAGM - D1

(Looking north)
(SB shown, NB symmetrical about ℄ FAI Route 55)

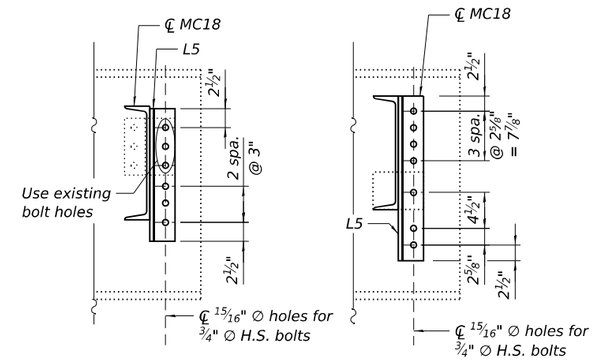

SECTION A-A

SECTION B-B

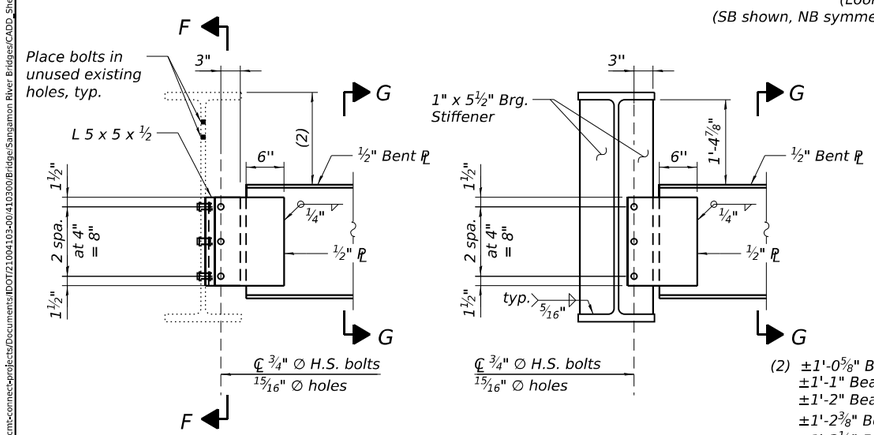

END PIER DIAPHRAGM - D2

(Looking north)

(2) ±1'-0⅝" Beam 8 & Beam 13
±1'-1" Beam 5 & 7, & Beam 14 & 16
±1'-2" Beam 4 & 6, & Beam 15 & 17
±1'-2⅜" Beam 1 & 3, & Beam 18 & 20
±1'-2½" Beam 2 & Beam 19

Dimensions shall be verified in the field. The diaphragm shall be parallel to the deck cross slope and be located 2'-3¼" from the top of the deck slab (measurement is prior to deck grinding).

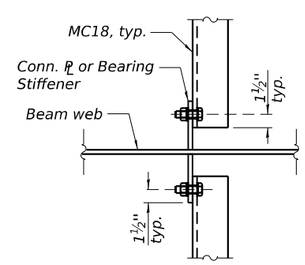

SECTION C-C

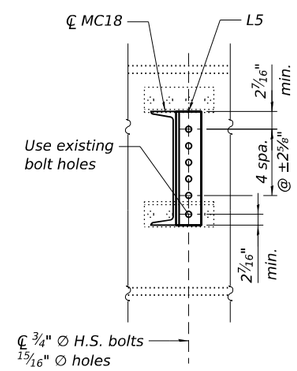

SECTION D-D

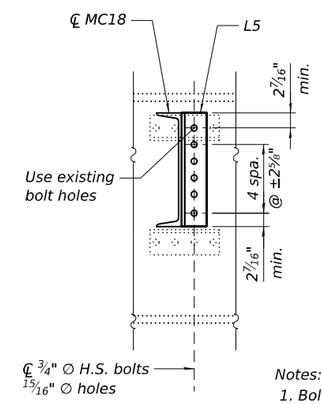

SECTION E-E

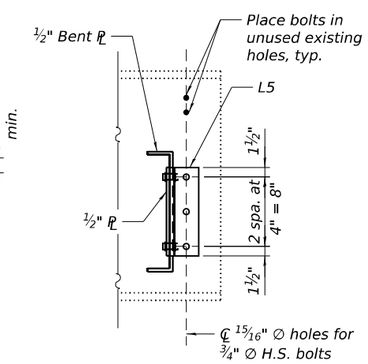

SECTION F-F

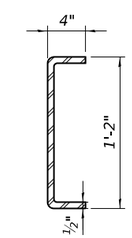

SECTION G-G

Notes:

1. Bolt minimum edge distance shall be 1½" unless noted otherwise.
2. Two hardened washers required for each set of oversized holes.
3. Place bent ℙ diaphragm with flanges outward from ℄ Pier.
4. Alternate channels of equal depth and larger weight are permitted to facilitate material acquisition. Alternate channels, if utilized, shall be provided at no additional cost to the Department.
5. Verify in the field all dimensions, including existing bolt hole locations.
6. Existing connection plates or angles, and diaphragm members to be removed shall be included in payment for Structural Steel Removal.

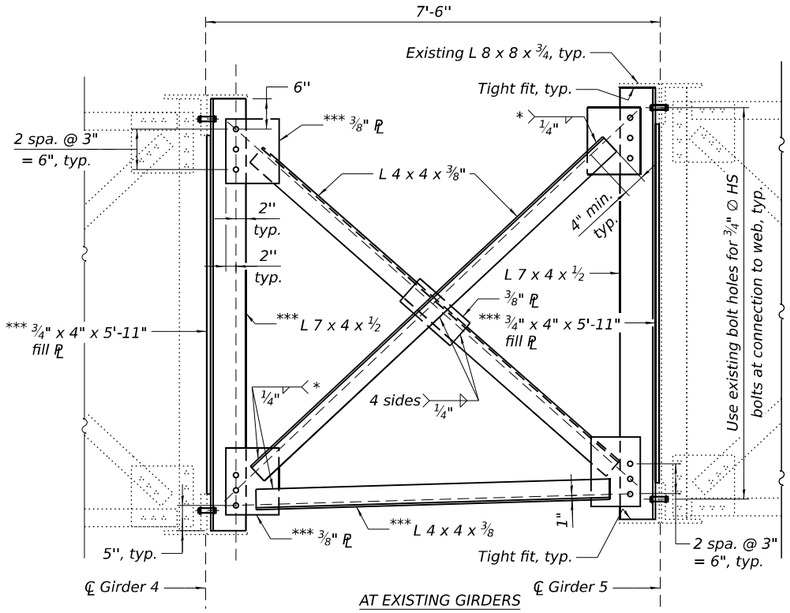

AT EXISTING GIRDERS

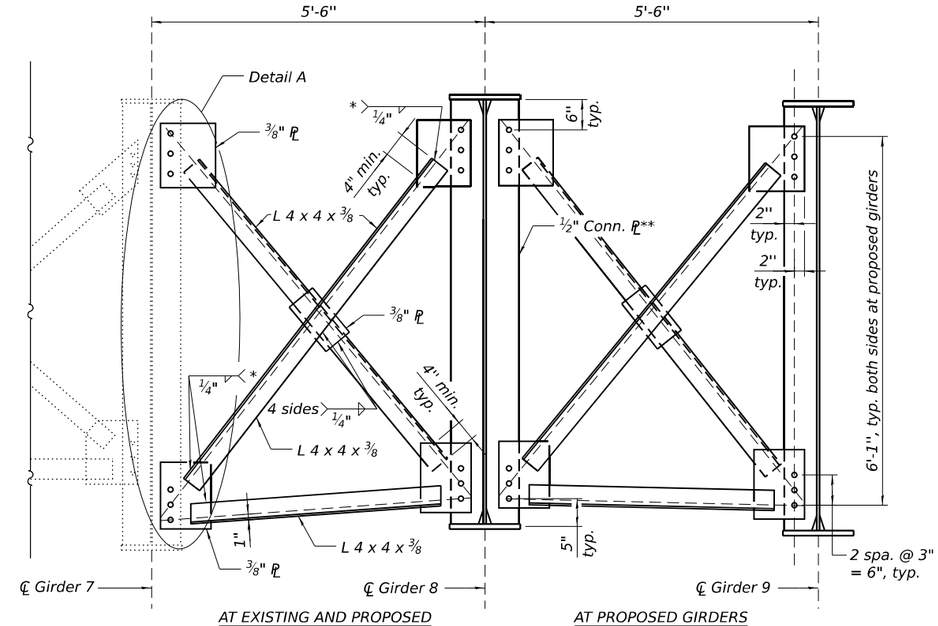

AT EXISTING AND PROPOSED GIRDER

AT PROPOSED GIRDERS

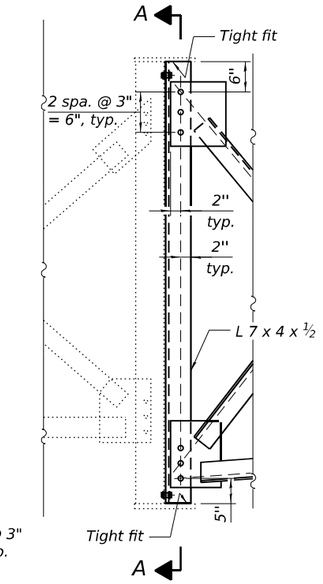

INTERIOR CROSS FRAME

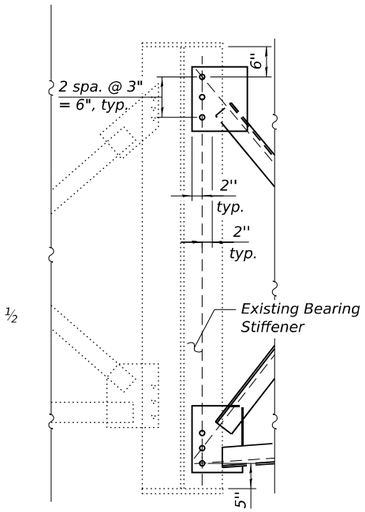

INT. CROSS FRAME AT PIER 5 OR 6

DETAIL A

* Fillet weld angles along 3 sides on one face of connection plate or channel
** Or bearing stiffener at piers
*** Remove existing connection angles, fill plates, cross frame members between the indicated girders to replace with sections and members indicated.

INTERIOR CROSS FRAME - CF2

(Looking north)
(SB shown, NB symmetrical about ℄ FAI Foute 55)
(Girder 9 exterior adjacent connection plate or bearing stiffener not shown)

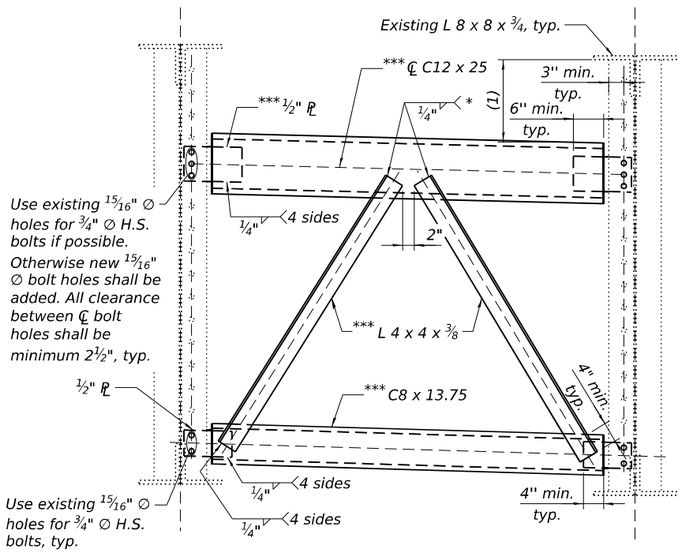

AT EXISTING GIRDERS

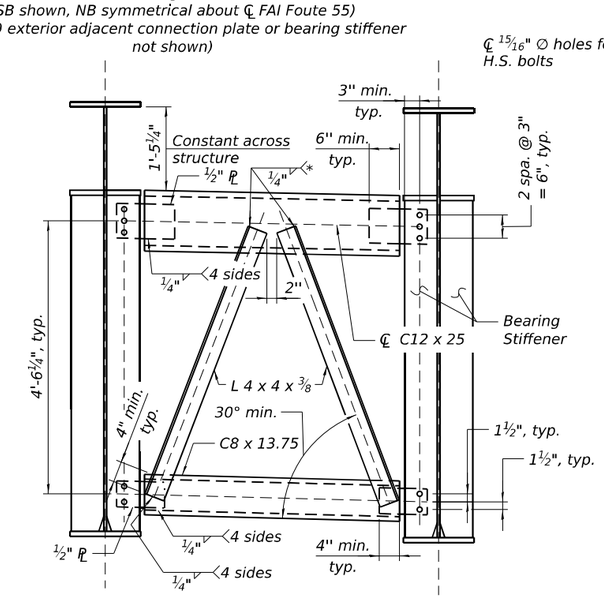

AT PROPOSED GIRDERS

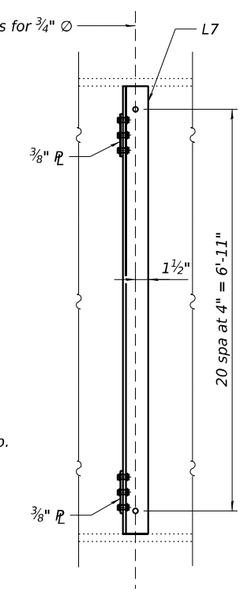

SECTION A-A

END CROSS FRAME - CF1

(1) ± 1'-2⅝" Girder 7 & Girder 12
± 1'-2¼" Girder 6 & Girder 13
± 1'-4" Girder 5 & Girder 14
± 1'-2½" Girder 4 & Girder 15
± 1'-3¾" Girder 3 & Girder 16
± 1'-4⅞" Girder 2 & Girder 17
± 1'-4⅜" Girder 1 & Girder 18

Dimensions shall be verified in the field. The top chord shall be parallel to the deck cross slope and be located 2'-3¼" from the top of the deck slab (measurement is prior to deck grinding).

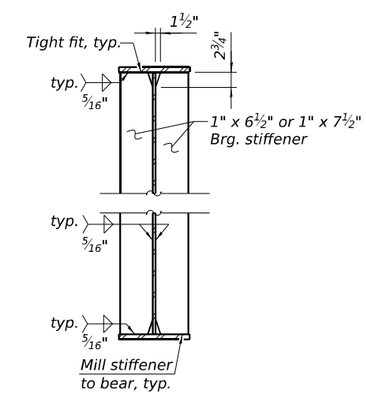

SECTION AT BEARING STIFFENER

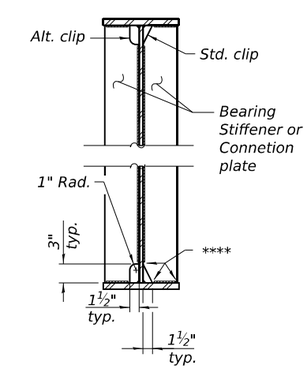

WELD LIMITS AND CLIP DETAILS

**** Stop welds ¼" (±⅛") from edges as shown, typ.

Notes:
1. Two hardened washers required for each set of oversized holes.
2. Place C12 x 25 flanges outward from ℄ pier.
3. Verify in the field all dimensions, including existing bolt hole locations, prior to ordering fill plates.
4. Existing connection plates or angles, fill plates, and cross frame members to be removed shall be included in payment for Structural Steel Removal.

CMT
License No. 184-000613
© Copyright CMT, Inc.

USER NAME = bholland	DESIGNED - MAC	REVISED -	STATE OF ILLINOIS DEPARTMENT OF TRANSPORTATION	STRUCTURAL STEEL DETAILS - III STRUCTURE NO. 084-0018 (NB) & 084-0019 (SB)	
	DRAWN - MAC	REVISED -			
PLOT SCALE = N/A	CHECKED - DH	REVISED -			
PLOT DATE = 3/21/2024	DATE - MARCH 2024	REVISED -		SCALE: SHEET 48 OF 67 SHEETS STA. TO STA.	

F.A.I. RTE.	SECTION	COUNTY	TOTAL SHEETS	SHEET NO.
55	(84-2BR-1)D,BY,BP,BRR	SANGAMON	139	90
		CONTRACT NO. 72K98		
		ILLINOIS FED. AID PROJECT		

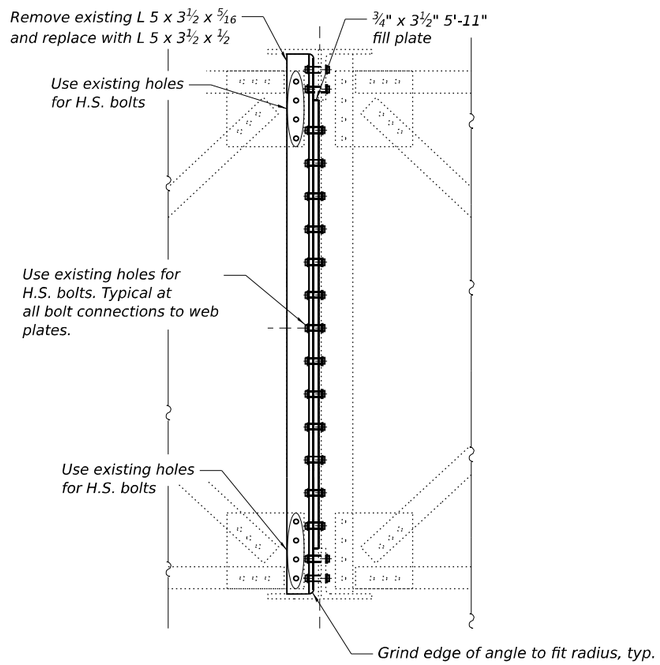

REPAIR DETAIL 1

(16 thus)

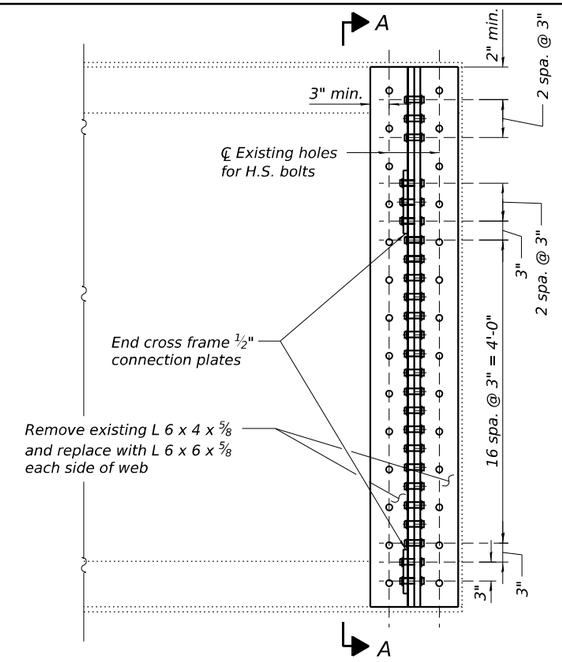

GIRDER END ELEVATION

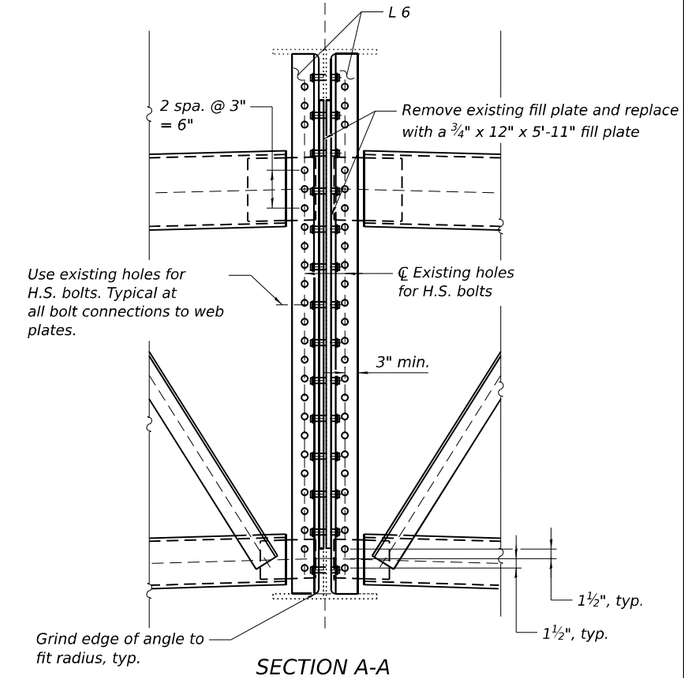

SECTION A-A

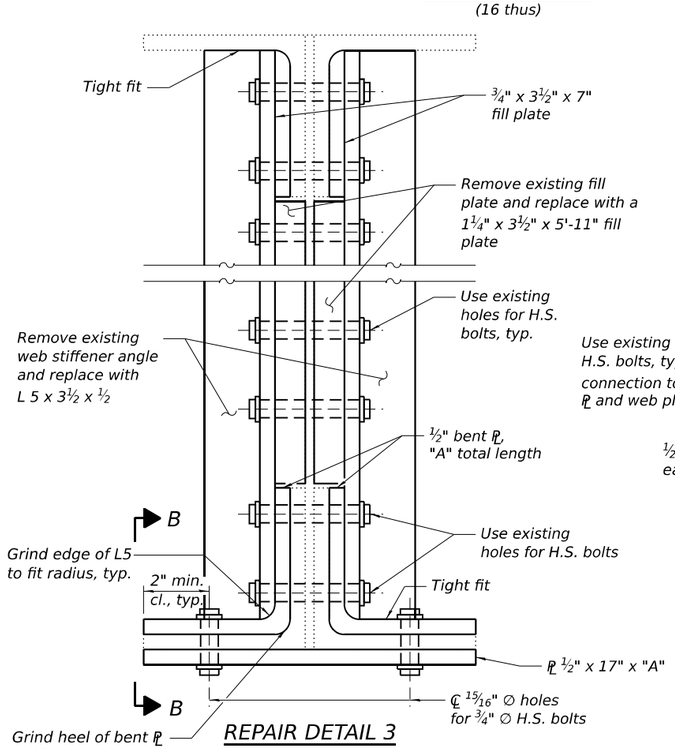

REPAIR DETAIL 3

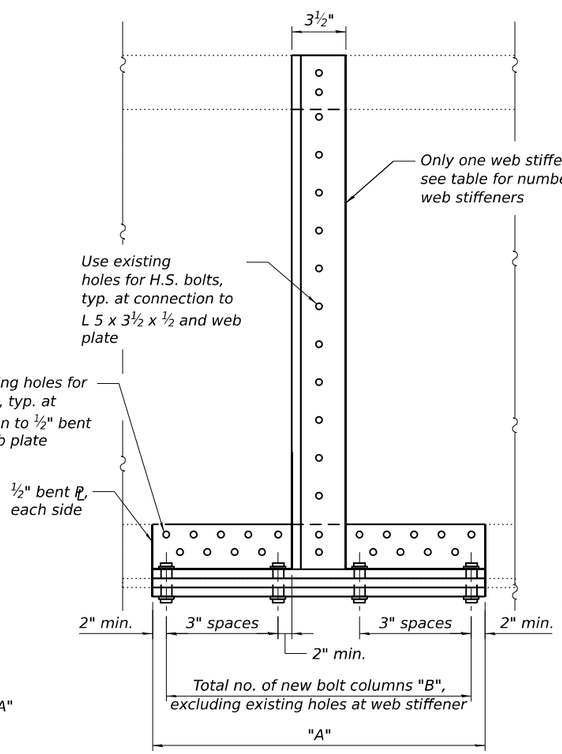

SECTION B-B

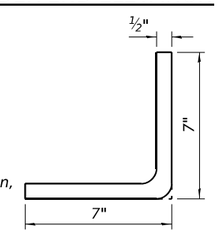

SECTION THROUGH BENT PLATE

REPAIR DETAIL 2

(6 thus)

	Location	"A"	*No. web stiff. & fill plates	"B"
	1	15'-10½"	4	58
(a)	2	7'-5½"	2	11
(b)	3	6'-5½"	2	6
(a)	4	8'-4"	2	18
	5	6'-0½"	2	21
	6	7'-3½"	2	26
	7	9'-9½"	2	36
(c)	8	8'-5½"	4	29
(b)	9	12'-6½"	4	27
	10	4'-4"	0	17
(a)	11	8'-5"	2	10
	12	3'-7"	0	14
(c)	13	7'-6½"	2	27
	14	22'-8½"	6	81

* Number shown accounts for web stiffeners and fill plates on each side of the web

(a) Remove existing bottom flange cover plates and replace with new cover plates detailed herein. Use ¾" X 16" fill plate for bottom of bottom plate for locations 1 and 4. Use existing holes at existing cover plate locations. The number of bolts shown in column "B" are for new bolt holes outside of the existing cover plate location.

(b) Remove bottom existing splice plate at bottom L shape member and replace with new splice plates. Use existing holes where splice is located. The number of bolts shown in column "B" are for new bolt holtes outside of the existing splice location.

(c) Remove partial bottom lateral bracing bracket.

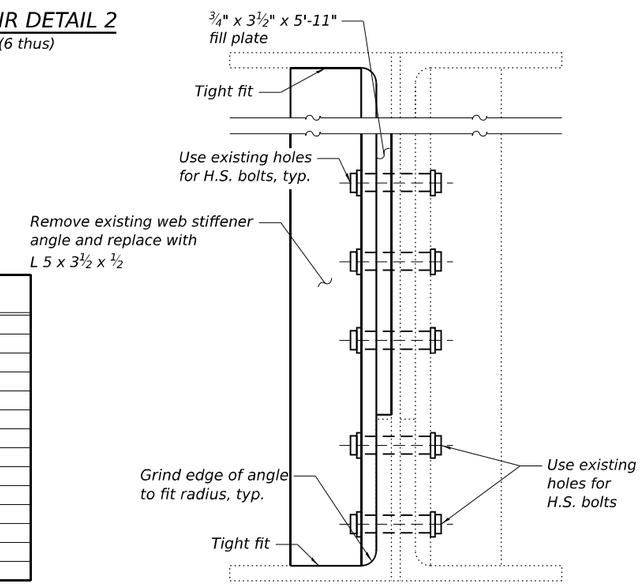

REPAIR DETAIL 4

Notes:

1. All new steel for repair details on this sheet shall be AASHTO M270 Grade 50 and be paid for as Structural Steel Repair.
2. Existing connection/stiffener plates or angles and fill plates to be removed shall be included in payment for Structural Steel Removal.
3. All existing steel to remain shall be cleaned and repainted after removals and prior to attaching new structural steel.
4. Verify in the field all dimensions, including existing bolt hole locations and prior to ordering fill plates.

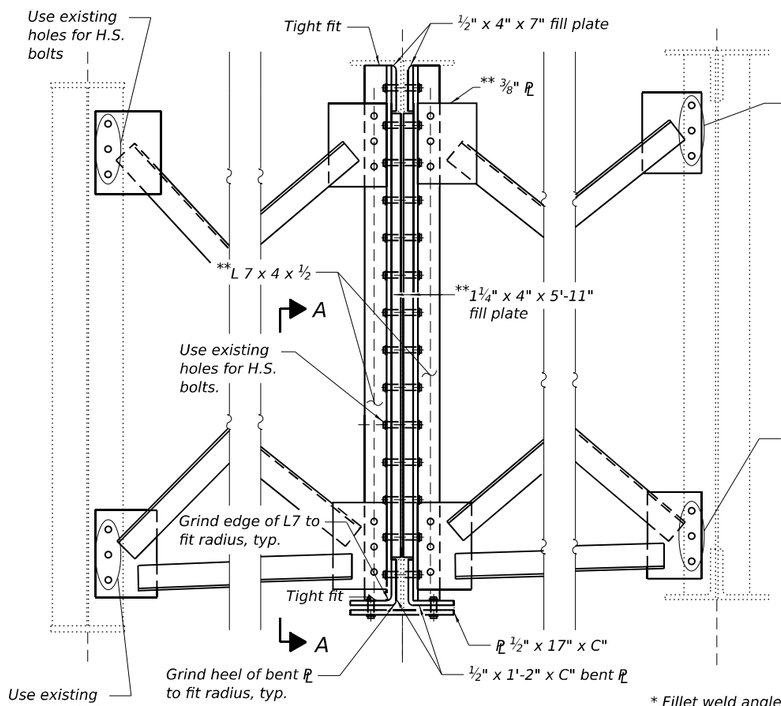

REPAIR DETAIL 5

(Looking north; see Repair Detail 7 for cross frame details)

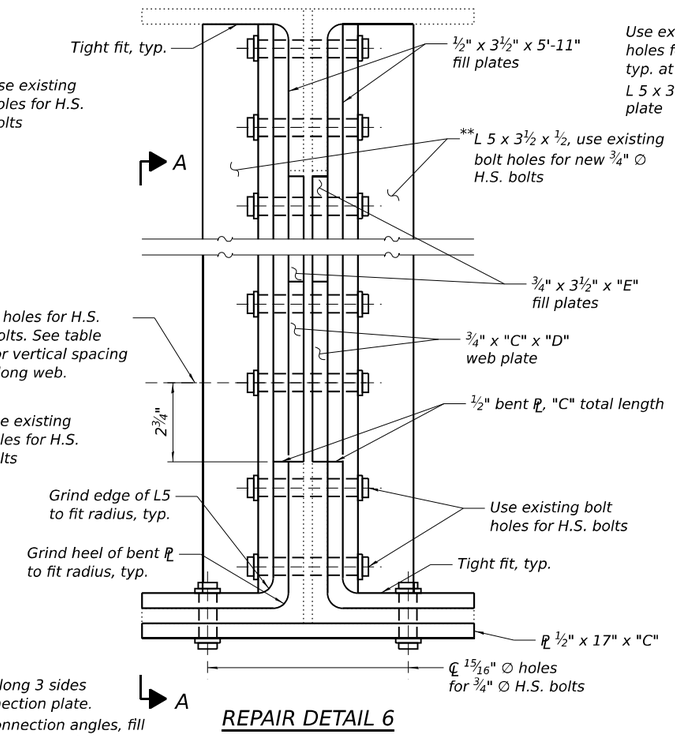

REPAIR DETAIL 6

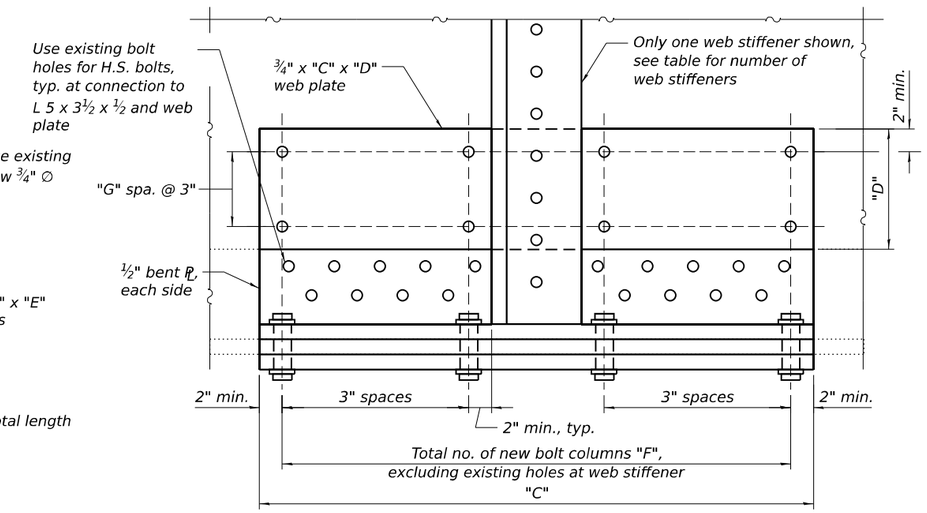

SECTION A-A

	Repair Detail, Location	"C"	"D"	"E"	***No. web stiff. & fill plates	"F"	"G"
(a)	5, 1	17'-1"	N/A	N/A	4	--	N/A
(b)	5, 2	13'-0"	N/A	N/A	4	17	N/A
	6, 1	14'-1½"	3'-1"	2'-10"	0	51	11
(c)	6, 2	8'-1"	3'-1"	2'-10"	4	17	11
	6, 3	7'-6½"	2'-1"	3'-10"	2	27	7
	6, 4	6'-0½"	1'-7"	4'-4"	2	21	5
	6, 5	4'-6½"	1'-1"	4'-10"	2	15	3
	6, 6	7'-3½"	2'-1"	3'-10"	2	26	7
(c) (d)	6, 7	6'-4"	1'-1"	4'-10"	2	7	3
	6, 8	13'-4½"	2'-1"	3'-10"	2	47	7

*** Number shown accounts for web stiffeners and fill plates on each side.

(a) No record of existing cover plate available. Existing hole locations and new hole locations shall be verified prior to furnishing new cover plates.
(b) Remove existing cover plate locations. The number of bolts shown in column "B" are for new bolt holes outside of the existing cover plate location.
(c) Remove existing ⅜" bottom flange cover plates and replace with new cover plates detailed herein. Use ¾" X 16" fill plate for bottom of bottom plate at Location 2. The number of bolts shown in column "B" are for new bolt holes outside of the existing cover plate location.
(d) Remove bottom lateral bracing members at Location 7 and replace with new lateral bracing, see sheet 42 of 67.

* Fillet weld angles along 3 sides on one face of connection plate.
** Remove existing connection angles, fill plates, and cross frame members to replace with sections and members indicated.

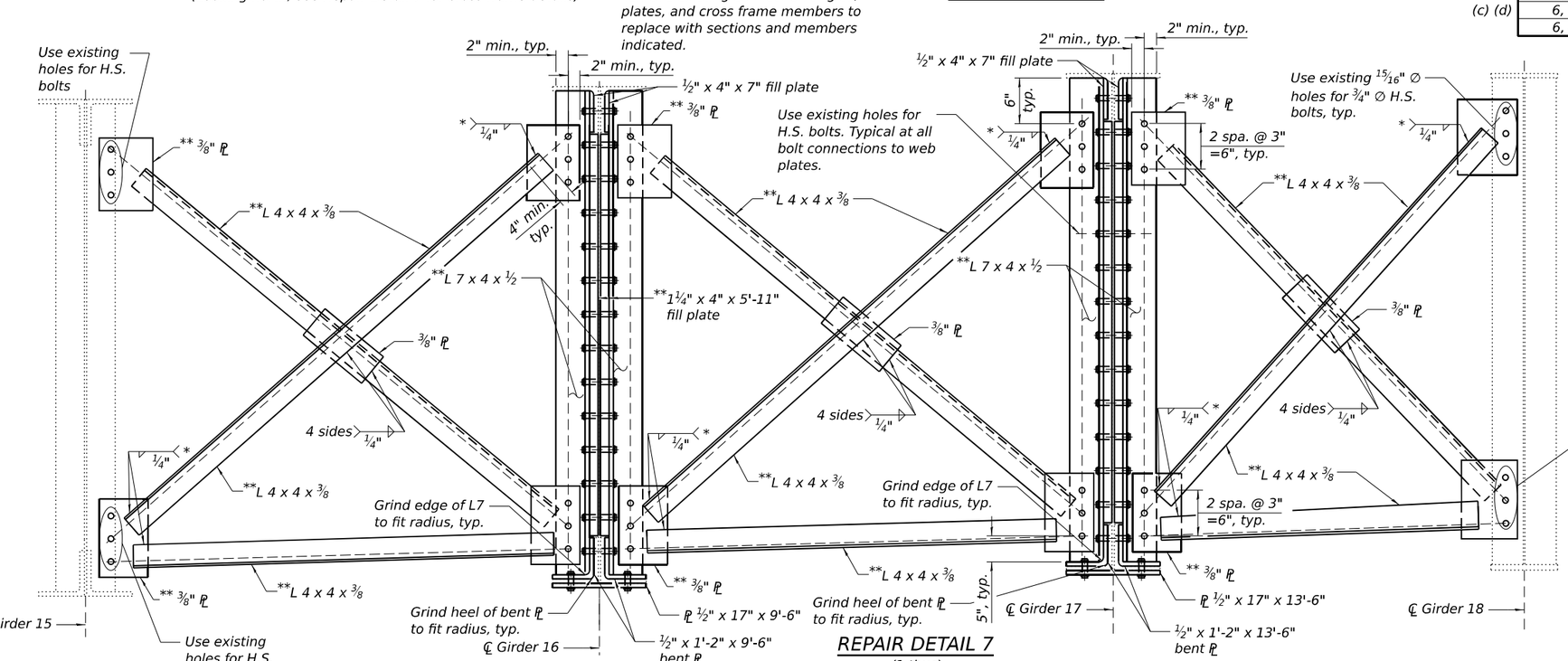

REPAIR DETAIL 7

(1 thus)
(Looking north)

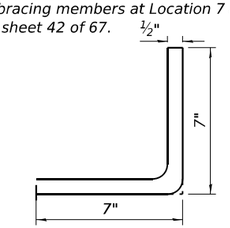

SECTION THROUGH BENT PLATE

Notes:
1. All new steel for repair details on this sheet, except cross-frames and connection plates, shall be AASHTO M270 Grade 50 and shall be paid for as Structural Steel Repair.
2. Existing connection/stiffener plates or angles, fill plates, and cross frame members to be removed shall be included in payment for Structural Steel Removal.
3. All existing steel to remain shall be cleaned and repainted after removals and prior to attaching new structural steel.
4. Verify in the field all dimensions, including existing bolt hole locations, prior to ordering fill plates.

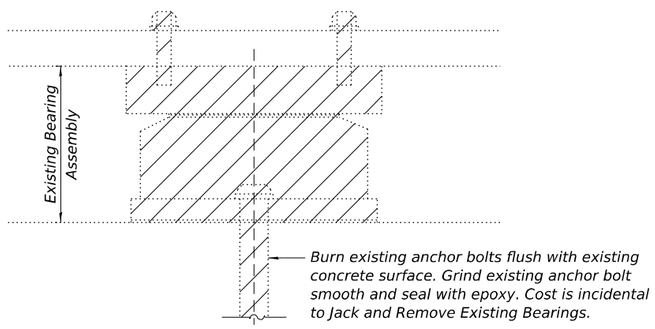

EXISTING BEARING REMOVAL DETAIL

(Existing Type II bearings shown, all existing elastomeric bearing types similar)

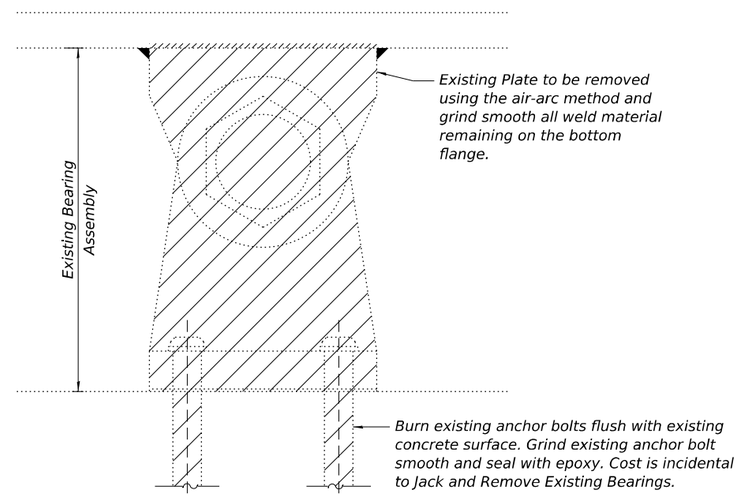

EXISTING BEARING REMOVAL DETAIL

(At Pier 5, Girders 2 thru 6 and 13 thru 17)

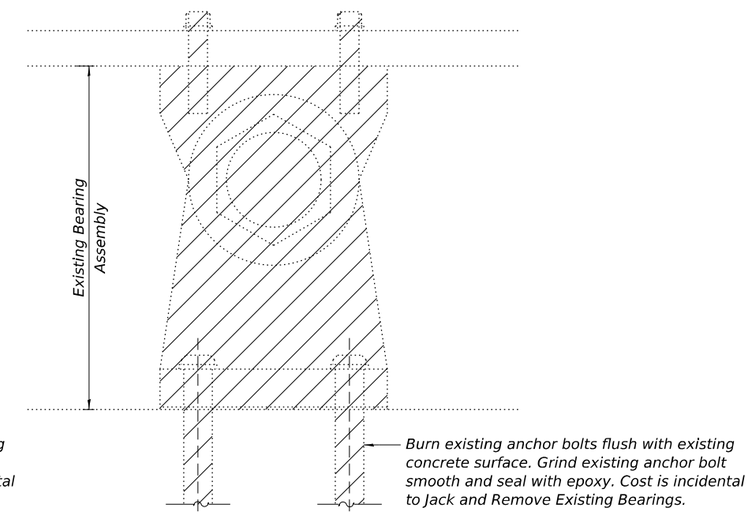

EXISTING BEARING REMOVAL DETAIL

(At Pier 5, Girders 1, 7, 12, and 18)

CMT License No. 184-000613 © Copyright CMT, Inc.	USER NAME = bholland	DESIGNED - BLH	REVISED -	STATE OF ILLINOIS DEPARTMENT OF TRANSPORTATION	BEARING REMOVAL DETAILS STRUCTURE NO. 084-0018 (NB) & 084-0019 (SB)
		DRAWN - BLH	REVISED -		
	PLOT SCALE = N/A	CHECKED - DH	REVISED -		
	PLOT DATE = 3/21/2024	DATE - MARCH 2024	REVISED -		SCALE: SHEET 51 OF 67 SHEETS STA. TO STA.

F.A.I. RTE.	SECTION	COUNTY	TOTAL SHEETS	SHEET NO.
55	(84-2BR-1)D,BY,BP,BRR	SANGAMON	139	93
		CONTRACT NO. 72K98		
		ILLINOIS FED. AID PROJECT		

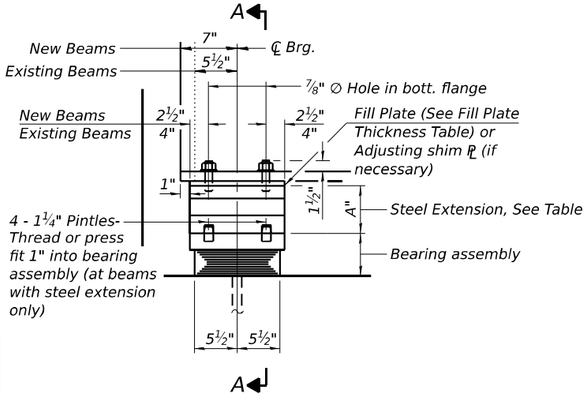

ELEVATION AT N. AND S. ABUT.

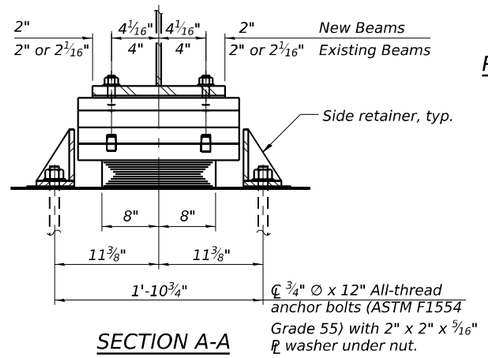

SECTION A-A

TYPE I ELASTOMERIC EXP. BRG.

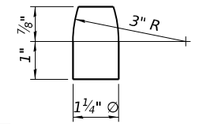

PINTLE

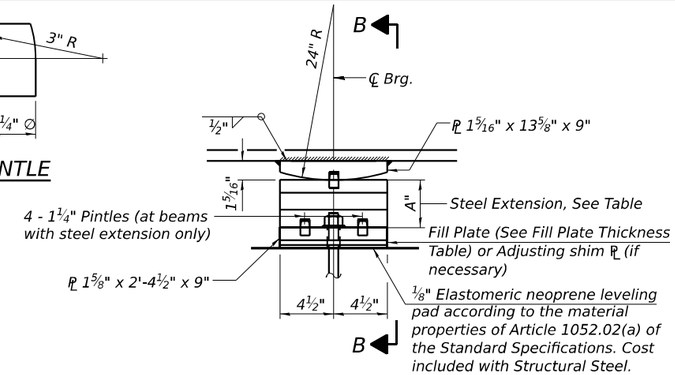

ELEVATION AT PIER 1 & PIER 10

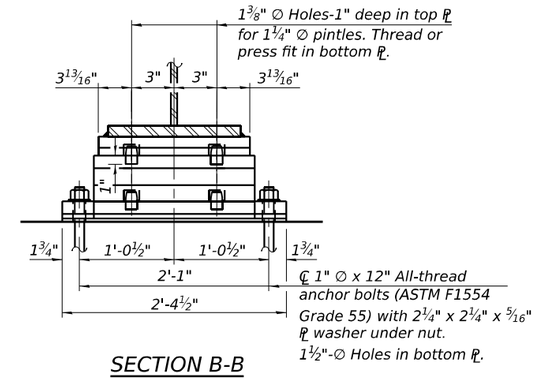

SECTION B-B

FIXED BEARING

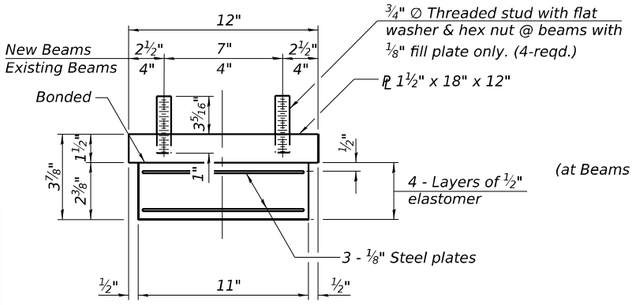

BEARING ASSEMBLY

Note:
Shim plates shall not be placed under bearing assembly.

FILL PLATE THICKNESS

(at Beams 1 thru 5 & Beams 16 thru 19, and Beam 20 at S. Abut.)

N. & S. Abut.	Piers 1 & 10
⅛"	5/16"

STEEL EXTENSION TABLE

(at Beams 6 thru 8 & 14 thru 15, and Beam 13 at S. Abut.)

Location	A	B	C	D	E
N. & S. Abut.	3⅛"	1"	1⅛"	12"	1'-6"
Piers 1 & 10	3 5/16"	1"	1 5/16"	9"	1'-1⅝"

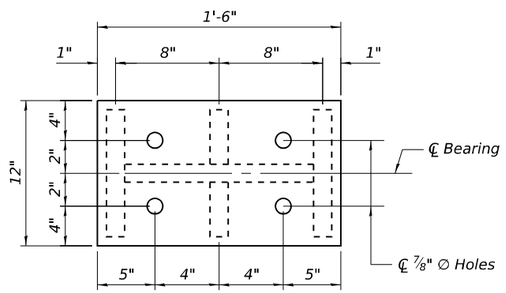

PLAN TOP AND BOTTOM PLATE

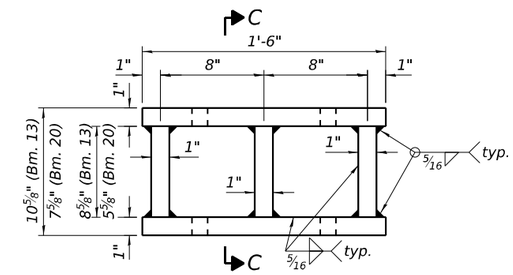

ELEVATION

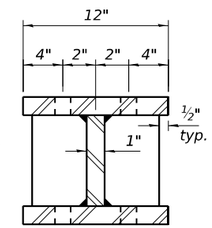

SECTION C-C

FABRICATED STEEL EXTENSION DETAIL

(at Beams 13 & 20 at the north abutment)

Notes:
1. Side retainers and stainless steel plates shall be included in the cost of Elastomeric Bearing Assembly, Type I.
2. Anchor bolts and side retainers at all supports shall be installed as each member is erected unless an equivalent temporary means of lateral restraint is used.
3. The structural steel plates of the Bearing Assembly shall conform to the requirements of AASHTO M270 Grade 50.
4. Two ⅛ in. adjusting shims shall be provided for each bearing in addition to all other plates or shims and placed as shown on the bearing details.
5. Prior to ordering any material, the Contractor shall verify in the field all bearing height and shim thickness dimensions.
6. No steel extension or fill plates required for Beams 9 thru 12.
7. Cost of steel extension and fill plates included with Furnishing and Erecting Structural Steel pay item.
8. Beams 13 and 20 at the north abutment shall have the concrete pedestal removed prior to installing new bearing assemblies.

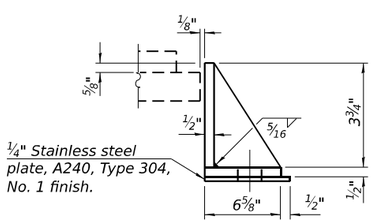

SIDE RETAINER

Equivalent rolled angle with stiffeners will be allowed in lieu of welded plates.

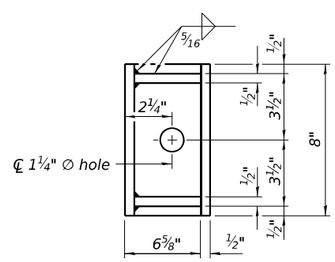

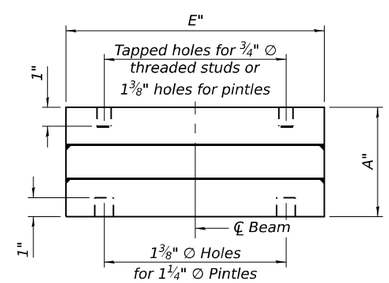

END VIEW

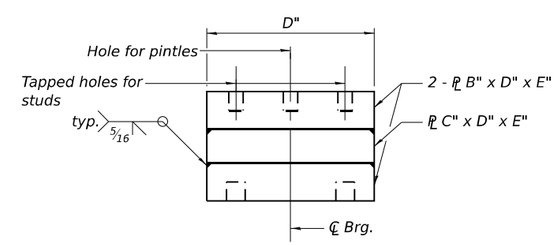

ELEVATION

STEEL EXTENSION DETAIL

(See table for dimensions)

BILL OF MATERIAL

Item	Unit	Total
Elastomeric Bearing Assembly Type I	Each	40
Anchor Bolts, ¾"	Each	80
Anchor Bolts, 1"	Each	80

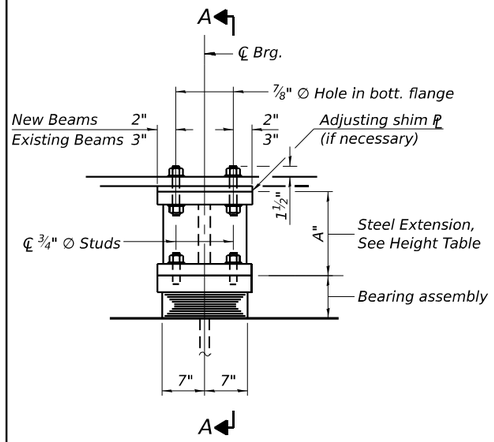

ELEVATION AT PIER 2 and PIER 9

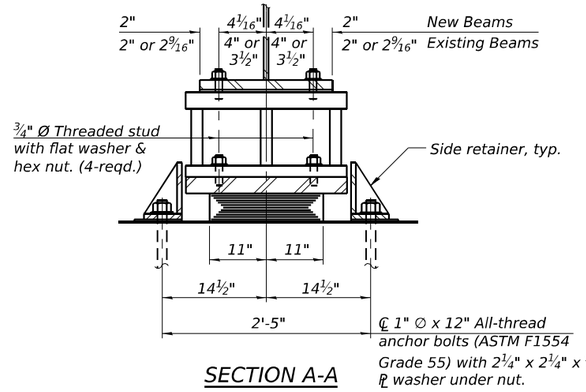

SECTION A-A

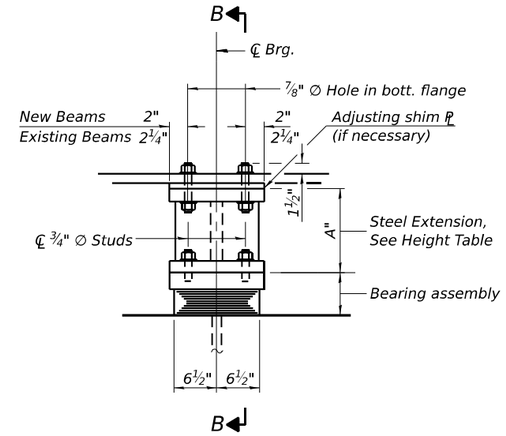

ELEVATION AT PIER 3 and PIER 8

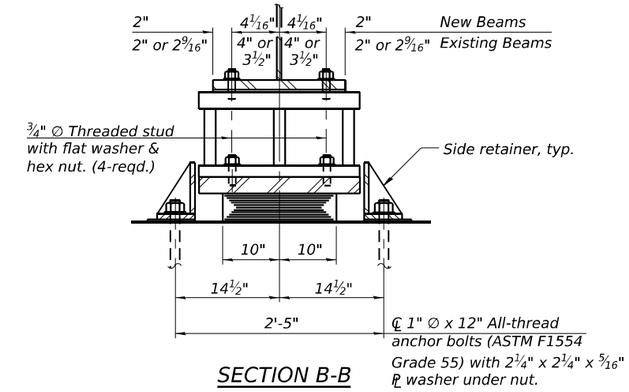

SECTION B-B

TYPE I ELASTOMERIC EXP. BRG.

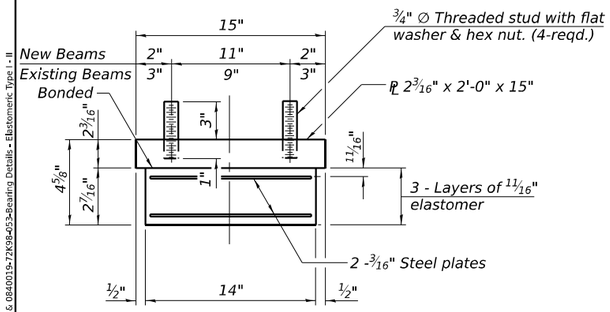

BEARING ASSEMBLY

(at Piers 2 & 9)

Note:
Shim plates shall not be placed under bearing assembly.

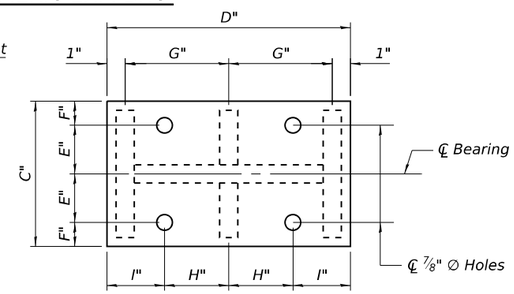

PLAN TOP AND BOTTOM PLATE

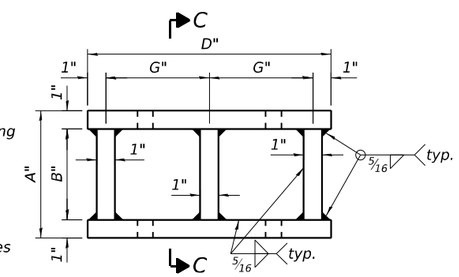

ELEVATION

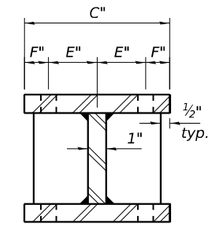

SECTION C-C

TYPE I ELASTOMERIC EXP. BRG.

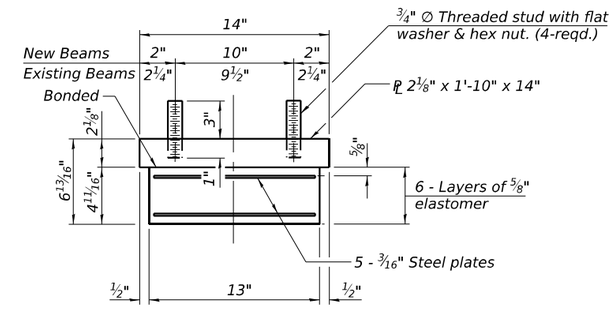

BEARING ASSEMBLY

(at Piers 3 & 8)

Note:
Shim plates shall not be placed under bearing assembly.

FABRICATED STEEL EXTENSION DETAIL

(See tables for dimensions A" thru G")

STEEL EXTENSION HEIGHT TABLE (NB)

Location	Height	Bm. 13	Bm. 14	Bm. 15	Bm. 16	Bm. 17	Bm. 18	Bm. 19	Bm. 20
Piers 2 & 9	A"	11¾"	13¼"	13¼"	10¼"	10¼"	10¼"	10¼"	8¾"
	B"	9¾"	11¼"	11¼"	8¼"	8¼"	8¼"	8¼"	6¾"
Piers 3 & 8	A"	9 9/16"	11 1/16"	11 1/16"	8 1/16"	8 1/16"	8 1/16"	8 1/16"	6 9/16"
	B"	7 9/16"	9 1/16"	9 1/16"	6 1/16"	6 1/16"	6 1/16"	6 1/16"	4 9/16"

STEEL EXTENSION HEIGHT TABLE (SB)

Location	Height	Bm. 1	Bm. 2	Bm. 3	Bm. 4	Bm. 5	Bm. 6	Bm. 7	Bm. 8
Piers 2 & 9	A"	8¾"	10¼"	10¼"	10¼"	10¼"	13¼"	13¼"	11¾"
	B"	6¾"	8¼"	8¼"	8¼"	8¼"	11¼"	11¼"	9¾"
Piers 3 & 8	A"	6 9/16"	8 1/16"	8 1/16"	8 1/16"	8 1/16"	11 1/16"	11 1/16"	9 9/16"
	B"	4 9/16"	6 1/16"	6 1/16"	6 1/16"	6 1/16"	9 1/16"	9 1/16"	7 9/16"

STEEL EXTENSION PLAN DIMENSIONS

Location	C	D	E	F	G
Piers 2 & 9	15"	2'-0"	4½"	3"	11"
Piers 3 & 8	14"	1'-10"	4¾"	2¼"	10"

STEEL EXTENSION PLAN DIMENSIONS

Location	Dimension	Bm. 1& 20	Bm. 2 & 19	Bm. 3 & 18	Bm. 4 & 17	Bm. 5 & 16	Bm. 6 & 15	Bm. 7 & 14	Bm. 8 & 13
Piers 2 & 9	H"	4"	3½"	3½"	3½"	3½"	3½"	3½"	4"
	I"	8"	8½"	8½"	8½"	8½"	8½"	8½"	8"
Piers 3 & 8	H"	4"	3½"	3½"	3½"	3½"	3½"	3½"	4"
	I"	7"	7½"	7½"	7½"	7½"	7½"	7½"	7"

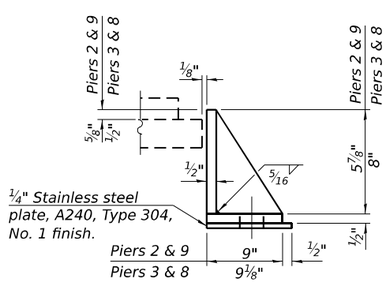

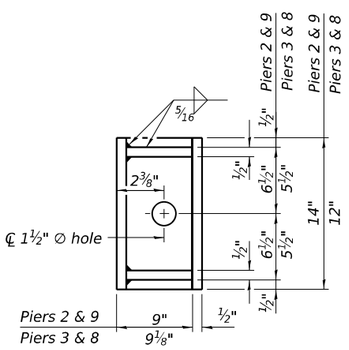

SIDE RETAINER

Equivalent rolled angle with stiffeners will be allowed in lieu of welded plates.

Notes:

1. Side retainers and stainless steel plates shall be included in the cost of Elastomeric Bearing Assembly, Type I.
2. Anchor bolts and side retainers at all supports shall be installed as each member is erected unless an equivalent temporary means of lateral restraint is used.
3. The structural steel plates of the Bearing Assembly shall conform to the requirements of AASHTO M270 Grade 50.
4. Two 1/8 in. adjusting shims shall be provided for each bearing in addition to all other plates or shims and placed as shown on the bearing details.
5. Prior to ordering any material, the Contractor shall verify in the field all bearing height and shim thickness dimensions.
6. No steel extension or fill plates required for Beams 9 thru 12.
7. Cost of steel extension and fill plates included with Furnishing and Erecting Structural Steel pay item.

BILL OF MATERIAL

Item	Unit	Total
Elastomeric Bearing Assembly Type I	Each	80
Anchor Bolts, 1"	Each	160

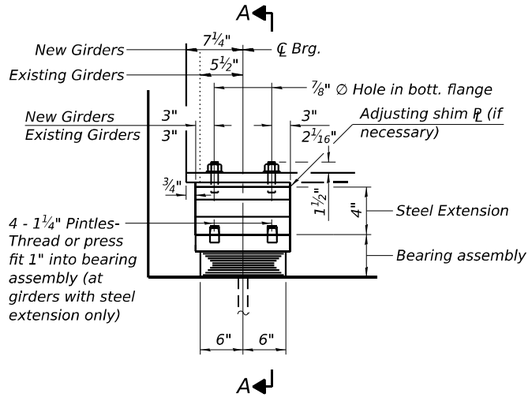

ELEVATION AT PIER 4 - UNIT 2
FOR STACKED PLATE STEEL EXTENSION
(at Girders 1 & 18)

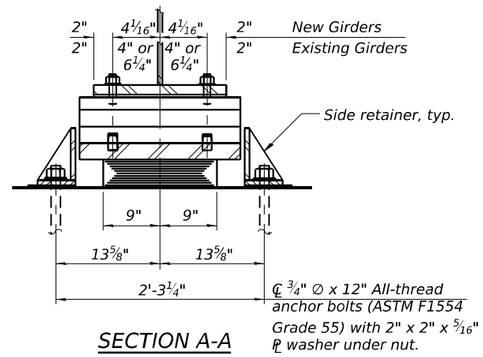

SECTION A-A

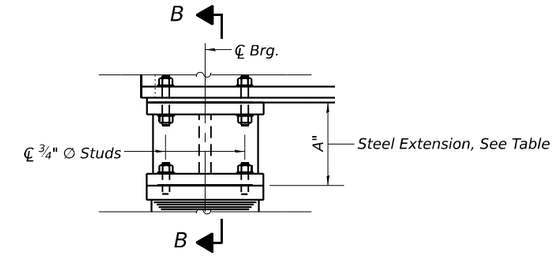

ELEVATION AT PIER 4 - UNIT 2
FOR FABRICATED STEEL EXTENSION
(at Girders 2 thru 7 and 12 thru 17)

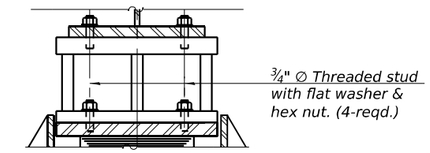

SECTION B-B

TYPE I ELASTOMERIC EXP. BRG.

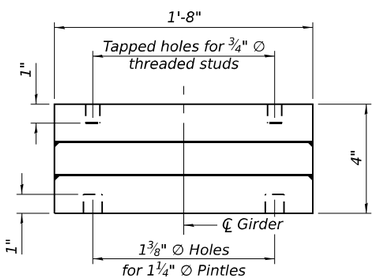

END VIEW

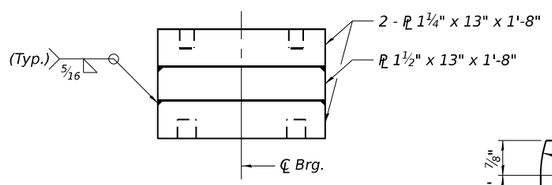

ELEVATION

STACKED PLATE DETAIL
(at Girders 1 & 18)

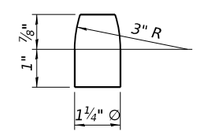

PINTLE

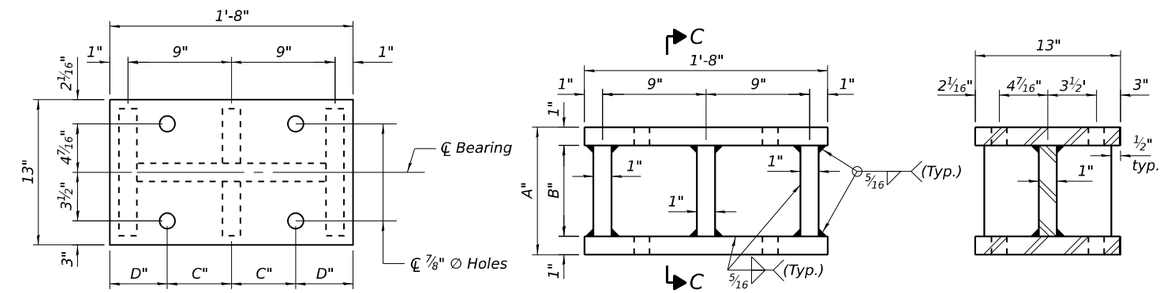

PLAN TOP AND BOTTOM PLATE

ELEVATION

SECTION C-C

FABRICATED STEEL EXTENSION DETAIL
(at Girders 2 thru 7 & Girders 12 thru 17)
(See tables for dimensions)

FABRICATED STEEL EXTENSION TABLE (NB)

Girder	A	B	C	D
12	7"	5"	4"	6"
13	9⅞"	7⅞"	6¼"	3¾"
14	11⅜"	9⅜"	6¼"	3¾"
15 & 16	8⅜"	6⅜"	6¼"	3¾"
17	6⅞"	4⅞"	6¼"	3¾"

FABRICATED STEEL EXTENSION TABLE (SB)

Girder	A	B	C	D
2	6⅞"	4⅞"	6¼"	3¾"
3 & 4	8⅜"	6⅜"	6¼"	3¾"
5	11⅜"	9⅜"	6¼"	3¾"
6	9⅞"	7⅞"	6¼"	3¾"
7	7"	5"	4"	6"

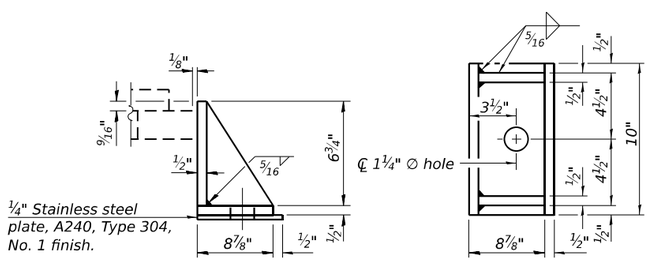

SIDE RETAINER
Equivalent rolled angle with stiffeners will be allowed in lieu of welded plates.

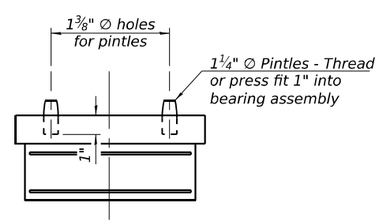

BEARING ASSEMBLY
(at Girders 1 & 18)

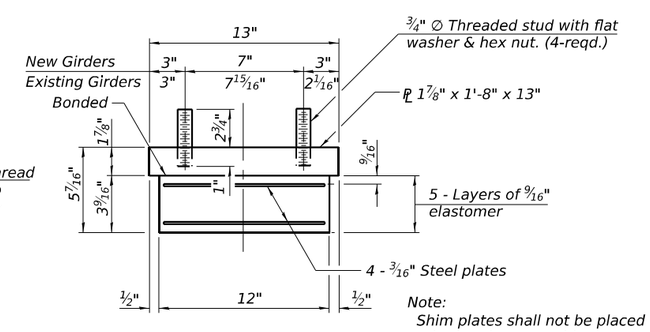

Note:
Shim plates shall not be placed under bearing assembly.

BEARING ASSEMBLY
(at Girders 2 thru 7 and 12 thru 17)

Notes:
1. Side retainers and stainless steel plates shall be included in the cost of Elastomeric Bearing Assembly, Type I.
2. Anchor bolts and side retainers at all supports shall be installed as each member is erected unless an equivalent temporary means of lateral restraint is used.
3. The structural steel plates of the Bearing Assembly shall conform to the requirements of AASHTO M270 Grade 50.
4. Two ⅛ in. adjusting shims shall be provided for each bearing in addition to all other plates or shims and placed as shown on the bearing details.
5. Prior to ordering any material, the Contractor shall verify in the field all bearing height and shim thickness dimensions.
6. No steel extension or fill plates required for Girders 8 thru 11.
7. Cost of steel extension and fill plates included with Furnishing and Erecting Structural Steel pay item.

BILL OF MATERIAL

Item	Unit	Total
Elastomeric Bearing Assembly Type I	Each	18
Anchor Bolts, ¾"	Each	36

CMT
License No. 184-000613

USER NAME = bholland	DESIGNED - BLH	REVISED -	
	DRAWN - BLH	REVISED -	
PLOT SCALE = N/A	CHECKED - DH	REVISED -	
PLOT DATE = 3/21/2024	DATE - MARCH 2024	REVISED -	

STATE OF ILLINOIS
DEPARTMENT OF TRANSPORTATION

BEARING DETAILS - ELASTOMERIC TYPE I - III
STRUCTURE NO. 084-0018 (NB) & 084-0019 (SB)

SCALE: | SHEET 54 OF 67 SHEETS | STA. | TO STA.

F.A.I. RTE.	SECTION	COUNTY	TOTAL SHEETS	SHEET NO.
55	(84-2BR-1)D,BY,BP,BRR	SANGAMON	139	96
		CONTRACT NO. 72K98		
		ILLINOIS	FED. AID PROJECT	

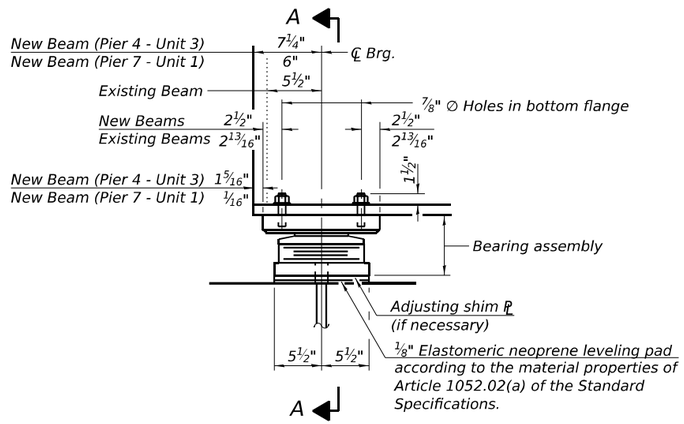

ELEVATION AT PIER 4 - UNIT 3 & PIER 7 - UNIT 1

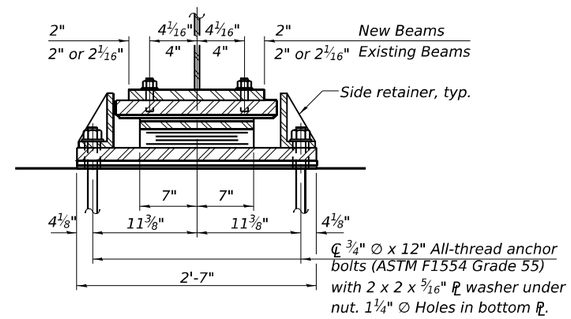

SECTION A-A

TYPE II ELASTOMERIC EXP. BRG.

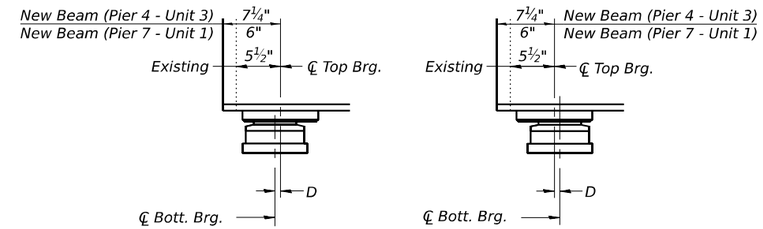

BELOW 50°F. ABOVE 50°F.

D=⅛" per each 100' of expansion for every 15° temp. change from the normal temp. of 50°F.

EXPANSION BEARING ORIENTATION

The above diagrams are for informational purposes only to show the amount of expected offset "D" for the current temperature in the field.

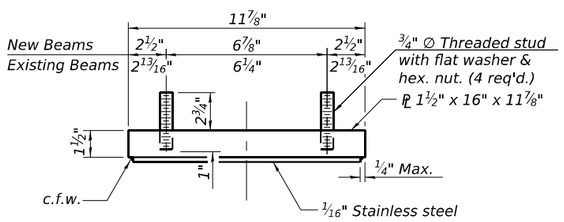

TOP BEARING ASSEMBLY

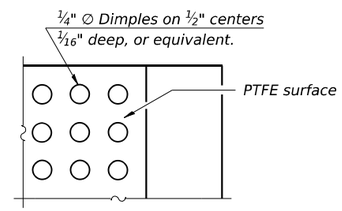

PLAN-PTFE SURFACE

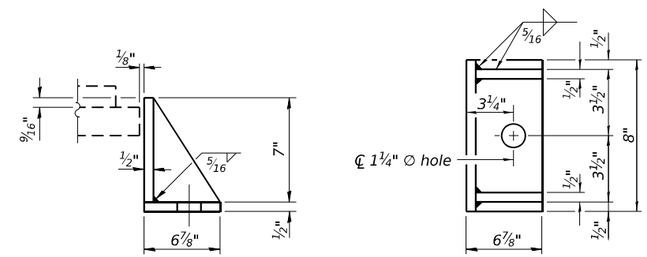

SIDE RETAINER

Equivalent rolled angle with stiffeners will be allowed in lieu of welded plates.

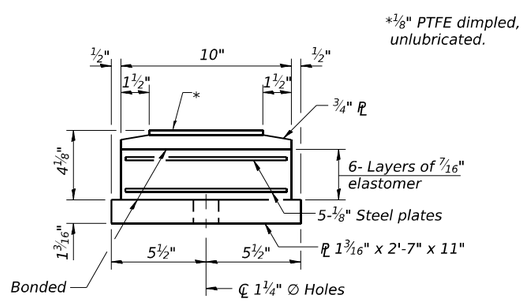

BOTTOM BEARING ASSEMBLY

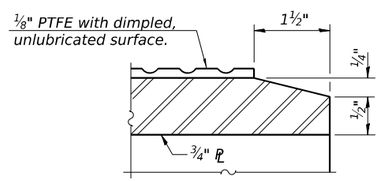

SECTION THRU PTFE

Notes:

1. Side retainers and leveling pad required for the elastomeric bearing assembly shall be included in the cost of Elastomeric Bearing Assembly, Type II.
2. The ⅛" PTFE sheet shall be bonded directly to the top steel plate with a two-component, medium viscosity epoxy resin, conforming to the requirements of the Federal Specification MMM-A-134, Type I. The bond agent shall be applied on the full area of the contact surfaces.
3. Bonding of ⅛" PTFE sheet during vulcanizing process will be permitted provided the process and method of adjusting assembly height is approved by the Engineer.
4. Anchor bolts and side retainers at all supports shall be installed as each member is erected unless an equivalent temporary means of lateral restraint is used.
5. The structural steel plates of the Bearing Assembly shall conform to the requirements of AASHTO M270 Grade 50.
6. Two ⅛ in. adjusting shims shall be provided for each bearing in addition to all other plates or shims and placed as shown on the bearing details.
7. No steel extension or fill plates required for Beams 9 thru 12.
8. Cost of steel extension and fill plates included with Furnishing and Erecting Structural Steel pay item.

BILL OF MATERIAL

Item	Unit	Total
Elastomeric Bearing Assembly Type II	Each	40
Anchor Bolts, ¾"	Each	80

CMT
License No. 184-000613

USER NAME = bholland	DESIGNED - BLH	REVISED -	
	DRAWN - BLH	REVISED -	
PLOT SCALE = N/A	CHECKED - DH	REVISED -	
PLOT DATE = 3/21/2024	DATE - MARCH 2024	REVISED -	

STATE OF ILLINOIS
DEPARTMENT OF TRANSPORTATION

BEARING DETAILS - ELASTOMERIC TYPE II - I
STRUCTURE NO. 084-0018 (NB) & 084-0019 (SB)

SCALE: SHEET 55 OF 67 SHEETS STA. TO STA.

F.A.I. RTE.	SECTION	COUNTY	TOTAL SHEETS	SHEET NO.
55	(84-2BR-1)D,BY,BP,BRR	SANGAMON	139	97
		CONTRACT NO. 72K98		
		ILLINOIS FED. AID PROJECT		

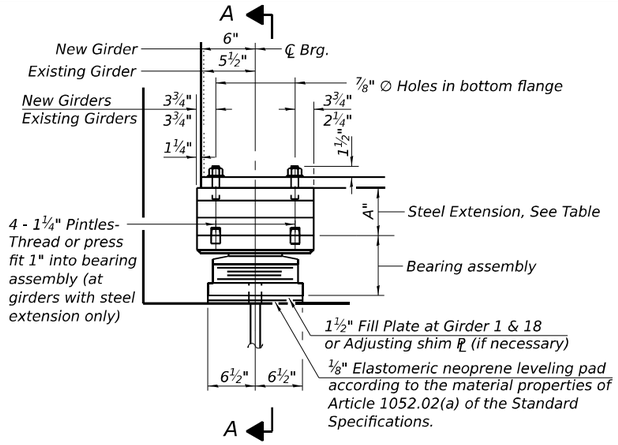

ELEVATION AT PIER 7 - UNIT 2
FOR STACKED PLATE STEEL EXTENSION

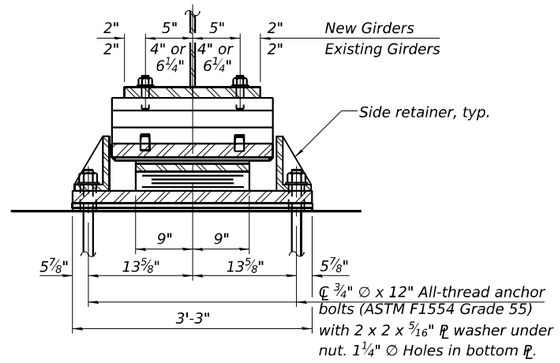

SECTION A-A

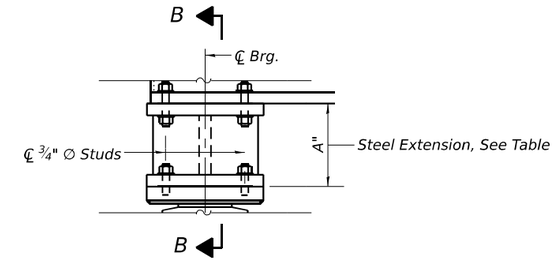

ELEVATION AT PIER 7 - UNIT 2
FOR FABRICATED STEEL EXTENSION

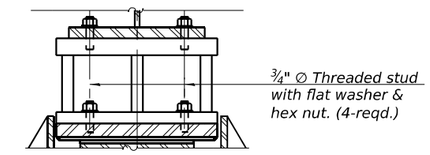

SECTION B-B

TYPE II ELASTOMERIC EXP. BRG.

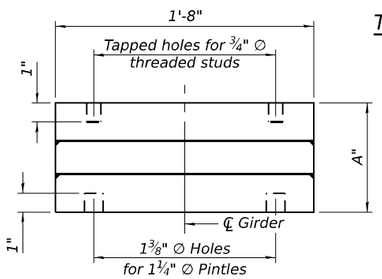

END VIEW

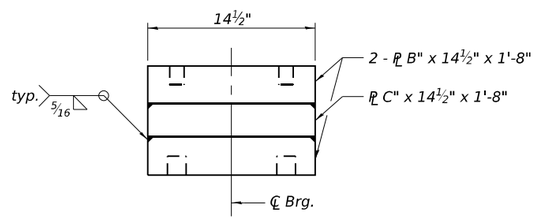

ELEVATION

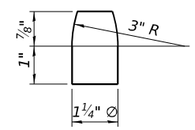

PINTLE

STACKED PLATE DETAIL
(See tables for dimensions)

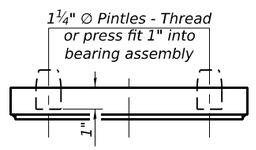

TOP BEARING ASSEMBLY
(at girders with stacked plate extension)

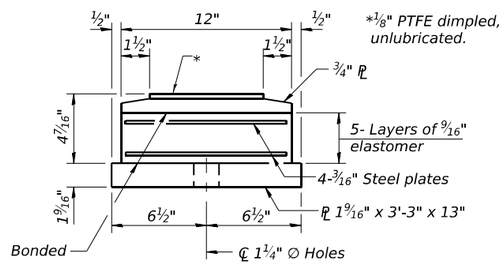

BOTTOM BEARING ASSEMBLY

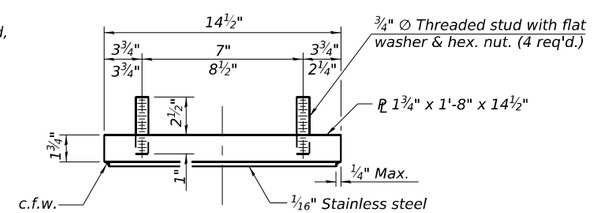

TOP BEARING ASSEMBLY
(at girders with fill plate & fabricated extension)

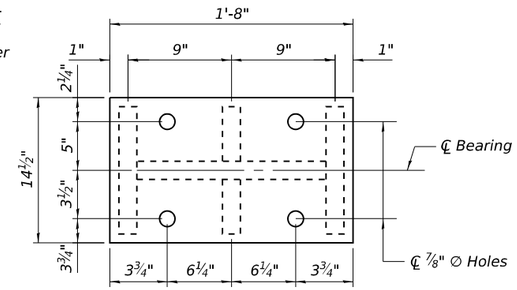

PLAN TOP AND BOTTOM PLATE

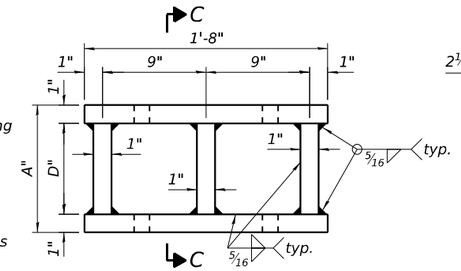

ELEVATION

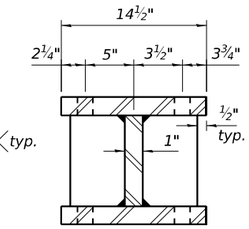

SECTION C-C

FABRICATED STEEL EXTENSION DETAIL
(See tables for dimensions)

STEEL EXTENSION TABLE (NB)

Girder	Type	A	B	C	D
12	Stacked Plate	4½"	1½"	1½"	-
13	Fabricated	7⅜"	-	-	5⅜"
14	Fabricated	8⅞"	-	-	6⅞"
15 & 16	Stacked Plate	5⅞"	2"	1⅞"	-
17	Stacked Plate	4⅜"	1½"	1⅜"	-
18	Fill Plate	1½"	-	-	-

STEEL EXTENSION TABLE (SB)

Girder	Type	A	B	C	D
1	Fill Plate	1½"	-	-	-
2	Stacked Plate	4⅜"	1½"	1⅜"	-
3 & 4	Stacked Plate	5⅞"	2"	1⅞"	-
5	Fabricated	8⅞"	-	-	6⅞"
6	Fabricated	7⅜"	-	-	5⅜"
7	Stacked Plate	4½"	1½"	1½"	-

Notes:

1. Side retainers and leveling pad required for the elastomeric bearing assembly shall be included in the cost of Elastomeric Bearing Assembly, Type II.
2. The ⅛" PTFE sheet shall be bonded directly to the top steel plate with a two-component, medium viscosity epoxy resin, conforming to the requirements of the Federal Specification MMM-A-134, Type I. The bond agent shall be applied on the full area of the contact surfaces.
3. Bonding of ⅛" PTFE sheet during vulcanizing process will be permitted provided the process and method of adjusting assembly height is approved by the Engineer.
4. Anchor bolts and side retainers at all supports shall be installed as each member is erected unless an equivalent temporary means of lateral restraint is used.
5. The structural steel plates of the Bearing Assembly shall conform to the requirements of AASHTO M270 Grade 50.
6. Two ⅛ in. adjusting shims shall be provided for each bearing in addition to all other plates or shims and placed as shown on the bearing details.
7. No steel extension or fill plates required for Girders 8 thru 11.
8. Cost of steel extension and fill plates included with Furnishing and Erecting Structural Steel pay item.

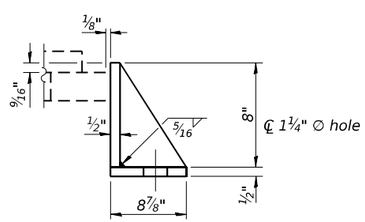

SIDE RETAINER

Equivalent rolled angle with stiffeners will be allowed in lieu of welded plates.

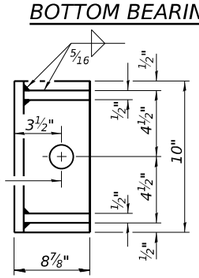

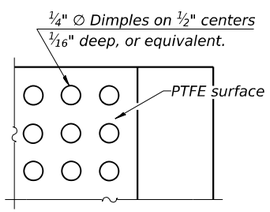

PLAN-PTFE SURFACE

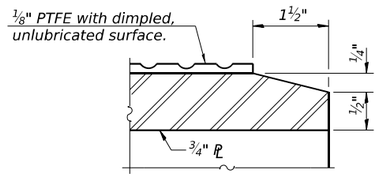

SECTION THRU PTFE

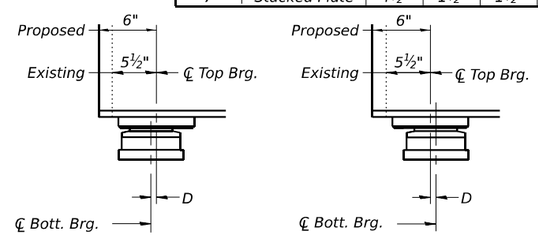

BELOW 50°F. ABOVE 50°F.

D=⅛" per each 100' of expansion for every 15° temp. change from the normal temp. of 50°F.

EXPANSION BEARING ORIENTATION

The above diagrams are for informational purposes only to show the amount of expected offset "D" for the current temperature in the field.

BILL OF MATERIAL

Item	Unit	Total
Elastomeric Bearing Assembly Type II	Each	18
Anchor Bolts, ¾"	Each	36

FILE NAME: pw://centerpoint-pw.bentley.com:cmt-connect-projects/Documents/IDOT/21004103-00/410300/Bridge/Sangamon River Bridges/CADD_Sheets/0840018 & 0840015-72K98-056-Bearing Details - Elastomeric Type II - II

CMT
License No. 184-000613
© Copyright CMT, Inc.

USER NAME = bholland	DESIGNED - BLH	REVISED -	
	DRAWN - BLH	REVISED -	
PLOT SCALE = N/A	CHECKED - DH	REVISED -	
PLOT DATE = 3/21/2024	DATE - MARCH 2024	REVISED -	

STATE OF ILLINOIS
DEPARTMENT OF TRANSPORTATION

BEARING DETAILS - ELASTOMERIC TYPE II - II
STRUCTURE NO. 084-0018 (NB) & 084-0019 (SB)

SCALE: | SHEET 56 OF 67 SHEETS | STA. | TO STA.

F.A.I. RTE.	SECTION	COUNTY	TOTAL SHEETS	SHEET NO.
55	(84-2BR-1)D,BY,BP,BRR	SANGAMON	139	98
		CONTRACT NO. 72K98		
		ILLINOIS	FED. AID PROJECT	

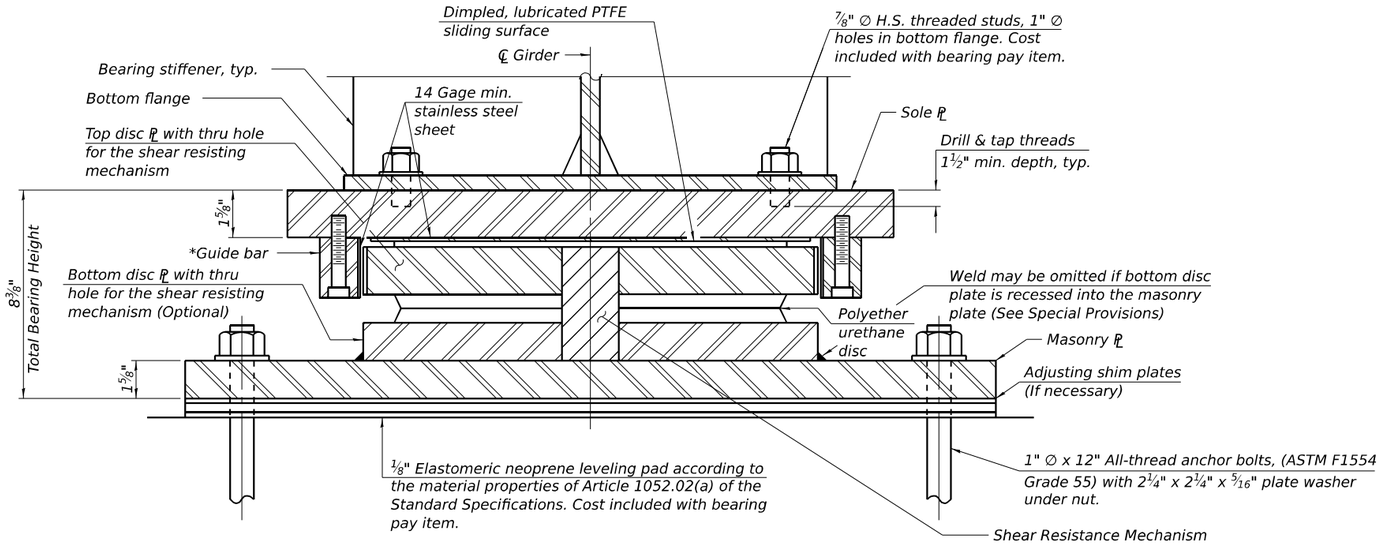

SECTION THRU BEARING AT PIER 6

(at Girders 1 thru 4, 8 thru 11, and 15 thru 18)

*As alternates to the bolted connection shown, the guide bars may be connected to the sole plate by groove welds or the guide bars and sole plate may be fabricated as a single piece.

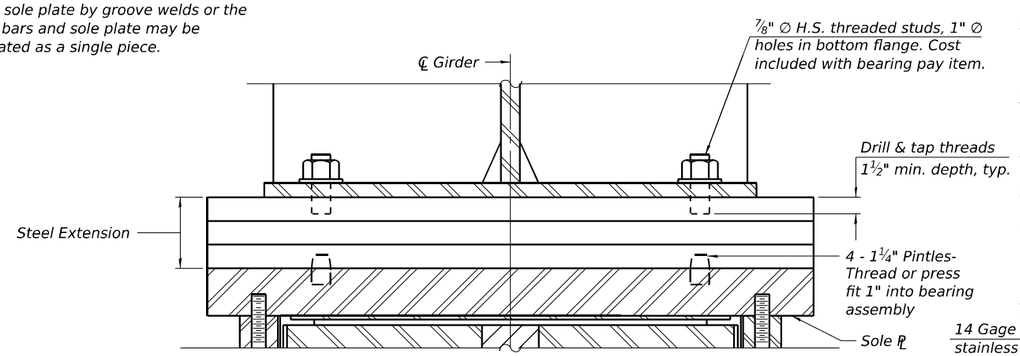

SECTION THRU BEARING AT PIER 6

(at Girders 5 thru 7 and 12 thru 14)

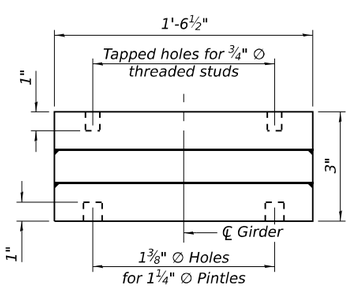

END VIEW

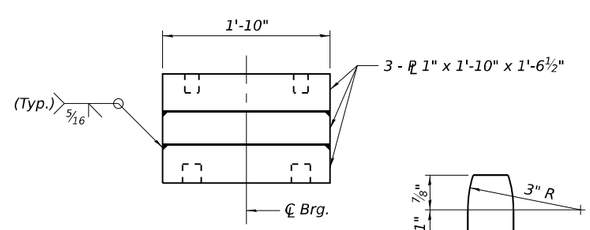

ELEVATION

STEEL EXTENSION DETAIL

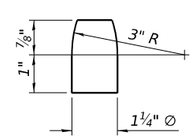

PINTLE

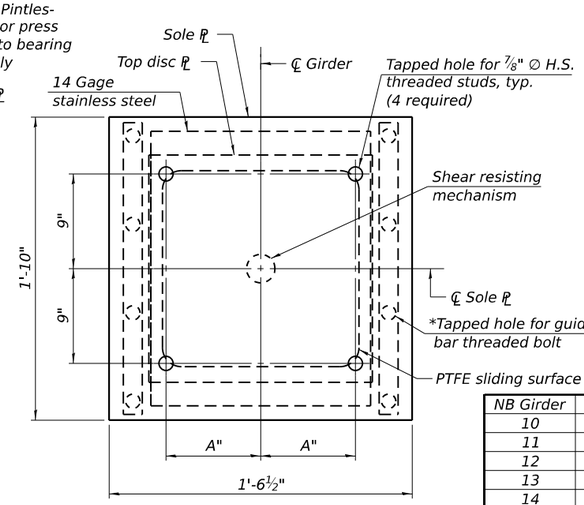

SOLE PLATE AND TOP DISC PLATE PLAN

NB Girder	A"
10	6"
11	6"
12	6"
13	5"
14	5"
15	5"
16	5"
17	5"
18	6"

SB Girder	A"
1	6"
2	5"
3	5"
4	5"
5	5"
6	5"
7	6"
8	6"
9	6"

Notes:

1. Two ⅛ in. adjusting shims shall be provided for each bearing in addition to all other plates or shims and placed as shown on bearing details. Shim plates not included in total bearing height. Cost included with bearing pay item.
2. Total bearing height is estimated based on manufacturer data. Actual bearing height may differ from contract plans. The Contractor shall be responsible for verifying bearing heights and adjusting seat elevations at new girder lines, if required, prior to placing pier concrete.
3. Steel extension heights are based on the detailed bearing height on this sheet. If the manufacturer's bearing height differs from that shown herein, the Contractor shall provide adjustments for the steel extension plates.
4. Cost of steel extension included with Furnishing and Erecting Structural Steel pay item.
5. Prior to ordering any material, the Contractor shall verify in the field all bearing height and shim thickness dimensions.
6. No steel extension or fill plates required for Girders 8 thru 11.

DESIGN DATA

Unfactored Vertical Dead Load Reaction (R_{DL})	232 kips
Unfactored Vertical Live Load without Impact Reaction (R_{LL})	95 kips
Maximum Strength or Extreme Event Lateral Reaction (H_u)	47 kips
Maximum Strength Limit State Rotation	0.0037 rad
Service I Factored Lateral Reaction	66 kips
Service I Rotation	0.0014 rad
Strength IV Factored Longitudinal Movement	2.56 in.
Service I Factored Vertical Reaction	327 kips
Strength IA Factored Vertical Reaction	573 kips

Service I Load Factors = 1.0DL + 1.0LL
Strength IA Load Factors = 1.3(1.0DL + 2.20LL)
Strength IV Load Factors = 1.3(1.0TU)
All live loads are without impact
DL Reaction includes wearing surface in accordance with AASHTO LFD 3.3.3

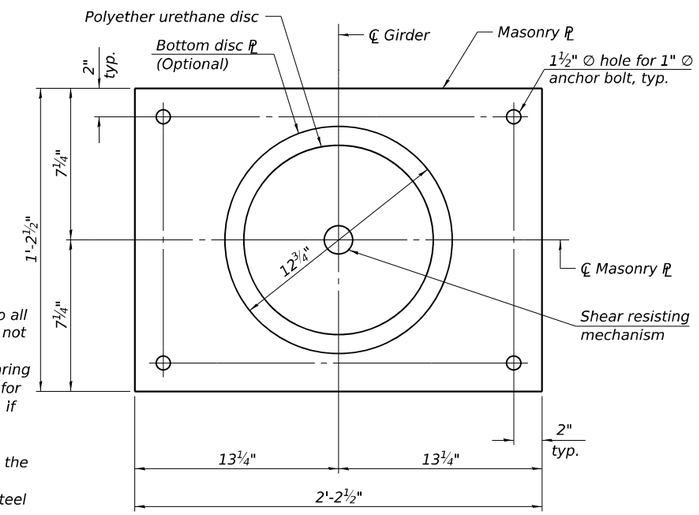

MASONRY PLATE AND BOTTOM DISC PLATE PLAN

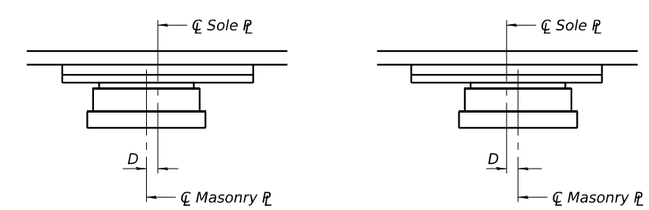

BELOW 50°F.
(Move masonry PL away from fixed bearing)

ABOVE 50°F.
(Move masonry PL toward fixed bearing)

SETTING ANCHOR BOLTS AT EXPANSION BEARING

D=⅛" per each 100' of expansion for every 15° temp. change from the normal temp. of 50° F.

BILL OF MATERIAL

	Item	Unit	Total
**	High Load Multi-Rotational Bearings, Disc, Guided Expansion-400K	Each	18
	Anchor Bolts, 1"	Each	72

** The value specified in the pay item name is an approximate vertical load capacity that is used for letting and bidding purposes only. Exact bearing capacity will vary subject to final design.

FILE NAME: pw://cmtengp-pw.bentley.com:cmt-connect-projects/Documents/IDOT/21004103-00/41030/Bridge/Sangamon River Bridges/CADD_Sheets/0840018 & 0840019-72K98-057-Guided Expansion HLMR Disc Bearing Details

CMT
License No. 184-000613

USER NAME = bholland	DESIGNED - BLH	REVISED -	
	DRAWN - BLH	REVISED -	
PLOT SCALE = N/A	CHECKED - DH	REVISED -	
PLOT DATE = 3/21/2024	DATE - MARCH 2024	REVISED -	

STATE OF ILLINOIS
DEPARTMENT OF TRANSPORTATION

GUIDED EXPANSION HLMR DISC BEARING DETAILS
STRUCTURE NO. 084-0018 (NB) & 084-0019 (SB)

SCALE: | SHEET 57 OF 67 SHEETS | STA. | TO STA.

F.A.I. RTE.	SECTION	COUNTY	TOTAL SHEETS	SHEET NO.
55	(84-2BR-1)D,BY,BP,BRR	SANGAMON	139	99
		CONTRACT NO. 72K98		
		ILLINOIS FED. AID PROJECT		

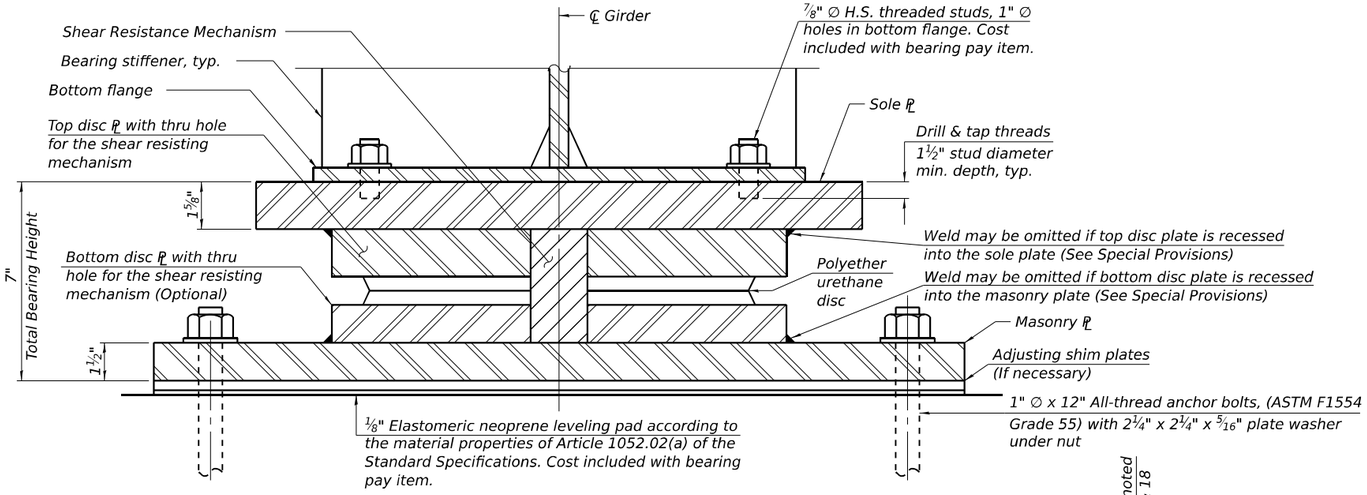

SECTION THRU BEARING AT PIER 5

(at Girders 8 thru 11)

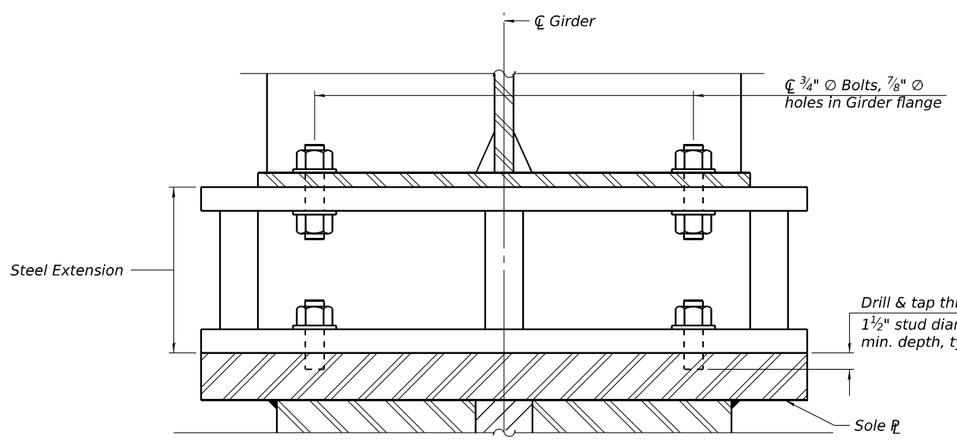

SECTION THRU BEARING AT PIER 5

(at Girders 1 thru 7 and 12 thru 18)

DESIGN DATA

Unfactored Vertical Dead Load Reaction (R_{DL})	232 kips
Unfactored Vertical Live Load without Impact Reaction (R_{LL})	95 kips
Maximum Strength or Extreme Event Lateral Reaction (H_u)	47 kips
Maximum Strength Limit State Rotation	0.0037 rad
Service I Factored Lateral Reaction	66 kips
Service I Rotation	0.0014 rad
Strength IV Factored Longitudinal Movement	Fixed
Service I Factored Vertical Reaction	327 kips
Strength IA Factored Vertical Reaction	573 kips

Service I Load Factors = 1.0DL + 1.0LL
Strength IA Load Factors = 1.3(1.0DL + 2.20LL)
Strength IV = 1.3(1.0TU)
All live loads are without impact
DL Reaction includes wearing surface in accordance with AASHTO LFD 3.3.3

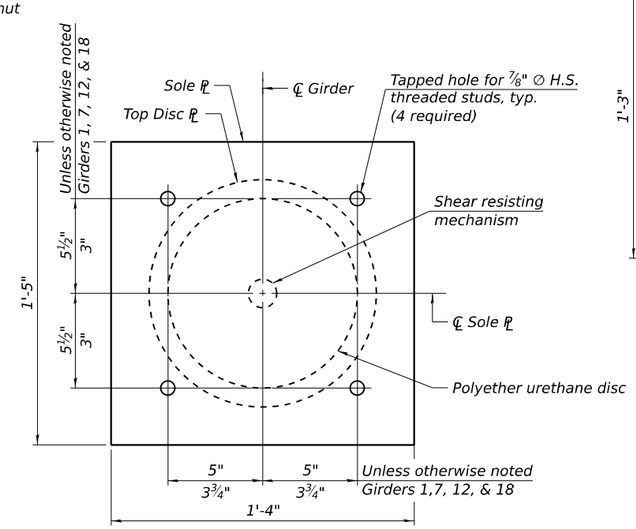

SOLE PLATE AND TOP DISC PLATE PLAN

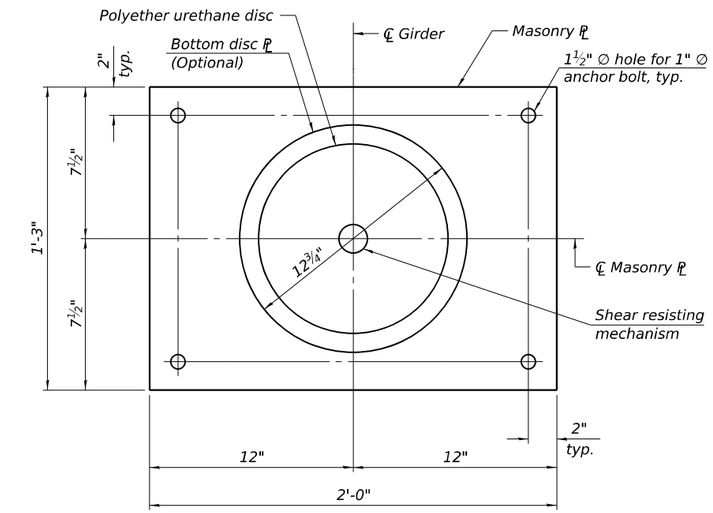

MASONRY PLATE AND BOTTOM DISC PLATE PLAN

Notes:

1. Two ⅛ in. adjusting shims shall be provided for each bearing in addition to all other plates or shims and placed as shown on bearing details. Shim plates not included in total bearing height. Cost included with bearing pay item.
2. Total bearing height is estimated based on manufacturer data. Actual bearing height may differ from contract plans. The Contractor shall be responsible for verifying bearing heights and adjusting seat elevations at new girder lines, if required, prior to placing pier concrete.
3. Steel extension heights are based on the detailed bearing height on this sheet. If the manufacturer's bearing height differs from that shown herein, the Contractor shall provide adjustments for the steel extension plates.
4. Cost of steel extension included with Furnishing and Erecting Structural Steel pay item.
5. Prior to ordering any material, the Contractor shall verify in the field all bearing height and shim thickness dimensions.
6. No steel extension or fill plates required for Girders 8 thru 11.

STEEL EXTENSION HEIGHT (NB)

Girder	A	B
12 thru 14	13⅞"	11⅞"
15 thru 18	10⅞"	8⅞"

STEEL EXTENSION HEIGHT (SB)

Girder	A	B
1 thru 4	10⅞"	8⅞"
5 thru 7	13⅞"	11⅞"

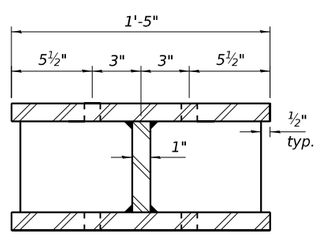

SECTION A-A

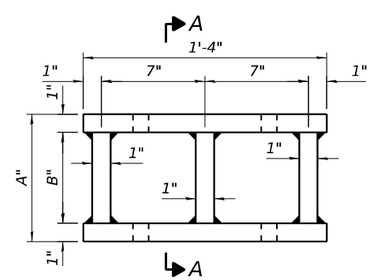

ELEVATION

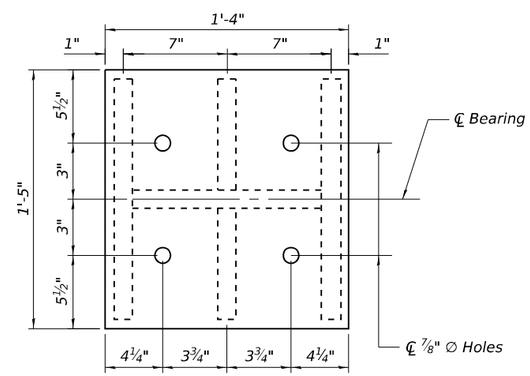

PLAN TOP AND BOTTOM PLATE

STEEL EXTENSION DETAIL

BILL OF MATERIAL

	Item	Unit	Total
*	High Load Multi-Rotational Bearing, Disc, Fixed-400k	Each	18
	Anchor Bolts, 1"	Each	72

* The value specified in the pay item name is an approximate vertical load capacity that is used for letting and bidding purposes only. Exact bearing capacity will vary subject to final design.

FILE NAME: pw://cmtengi-pw.bentley.com:cmtc-connect-projects/Documents/IDOT/21094103-00/410300/Bridge/Sangamon River Bridges/CADD_Sheets/0840018 & 0840019-72K98-058-Fixed HLMR Disc Bearing Details

CMT License No. 184-000613 © Copyright CMT, Inc.

USER NAME = bholland	DESIGNED - BLH	REVISED -	
	DRAWN - BLH	REVISED -	
PLOT SCALE = N/A	CHECKED - DH	REVISED -	
PLOT DATE = 3/21/2024	DATE - MARCH 2024	REVISED -	

STATE OF ILLINOIS
DEPARTMENT OF TRANSPORTATION

FIXED HLMR DISC BEARING DETAILS
STRUCTURE NO. 084-0018 (NB) & 084-0019 (SB)

SCALE: | SHEET 58 OF 67 SHEETS | STA. | TO STA.

F.A.I. RTE.	SECTION	COUNTY	TOTAL SHEETS	SHEET NO.
55	(84-2BR-1)D,BY,BP,BRR	SANGAMON	139	100
		CONTRACT NO. 72K98		
		ILLINOIS FED. AID PROJECT		

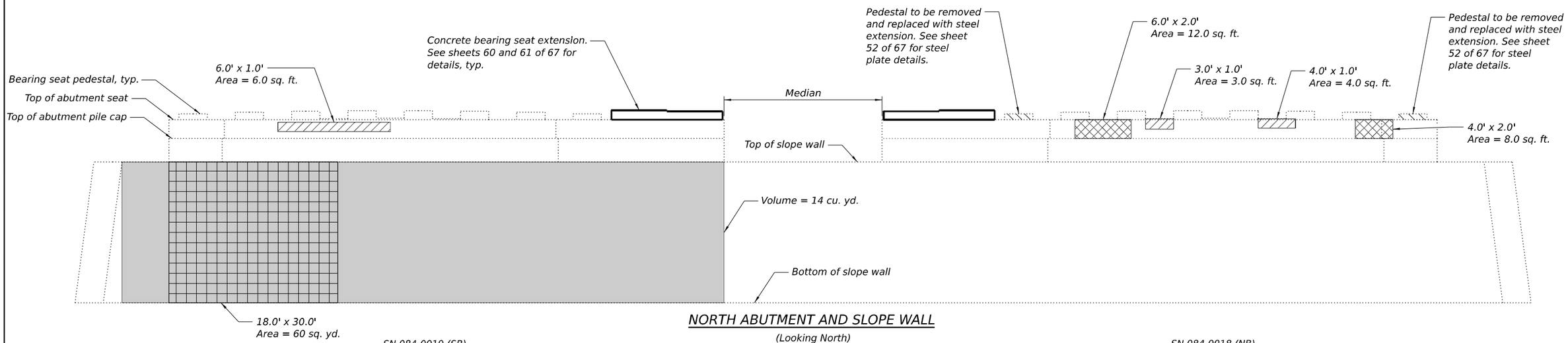

SN 084-0019 (SB)

NORTH ABUTMENT AND SLOPE WALL

(Looking North)
(Showing abutment seat and unfolded view of slope wall)

SN 084-0018 (NB)

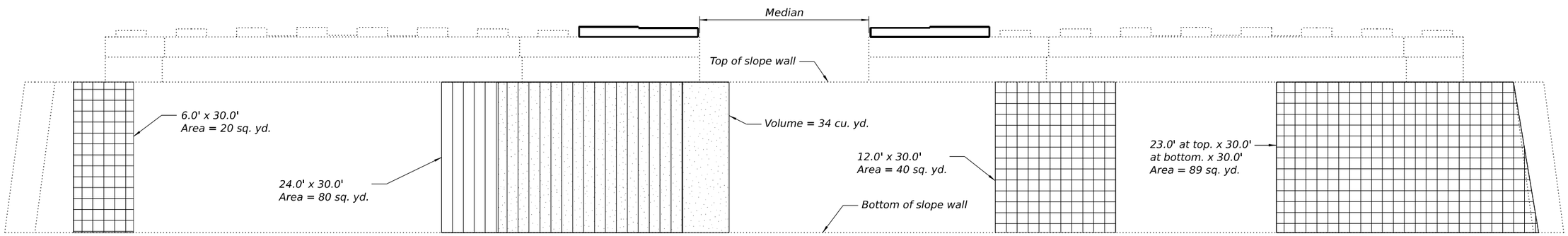

SN 084-0018 (NB)

SOUTH ABUTMENT AND SLOPE WALL

(Looking South)
(Showing abutment seat and unfolded view of slope wall)

SN 084-0018 (SB)

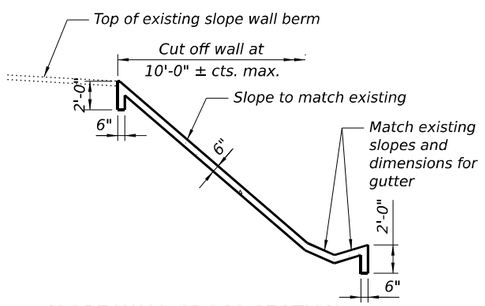

SLOPE WALL CROSS SECTION

LEGEND

- Concrete Removal
- Structural Repair of Concrete (Depth Equal to or Less than 5 Inches)
- Structural Repair of Concrete (Depth Greater than 5 Inches)
- Slope Wall Repair
- Slope Wall Removal and Slope Wall 6 Inch
- Porous Granular Backfill
- Slope Wall Slurry Pumping

BILL OF MATERIAL

ITEM	UNIT	TOTAL
Porous Granular Backfill	Cu. Yd.	34
Concrete Removal	Cu. Yd.	0.4
Slope Wall Removal	Sq. Yd.	80
Slope Wall 6 Inch	Sq. Yd.	80
Structural Repair of Concrete (Depth Equal to or Less than 5 Inches)	Sq. Ft.	13
Structural Repair of Concrete (Depth Greater than 5 Inches)	Sq. Ft.	20
Slope Wall Repair	Sq. Yd.	209
Slope Wall Slurry Pumping	Cu. Yd.	14

Notes:
1. The areas for the slope wall repairs shown are approximate in dimension and location.
   The voided areas shall be filled with Slope Wall Slurry Pumping or Porous Granular Backfill as directed by the Engineer. Approximate quantities and locations are herein. Small areas of slope wall may need to be removed to access the voids in the slope walls. Any removals shall be repaired. Cost of removal and repairs shall be included with Slope Wall Slurry Pumping. See Special Provisions.
2. See sheets 60 and 61 of 67 for abutment backwall and wingwall repairs.
3. Slope wall shall be reinforced with welded wire fabric, 6 in. x 6 in. - W4.0 x W4.0, weighing 58 lbs. per 100 sq. ft.

CMT
License No. 184-000813

USER NAME = bholland	DESIGNED - DH	REVISED -	
	DRAWN - VT/BLH	REVISED -	
PLOT SCALE = N/A	CHECKED - DH	REVISED -	
PLOT DATE = 3/21/2024	DATE - MARCH 2024	REVISED -	

STATE OF ILLINOIS
DEPARTMENT OF TRANSPORTATION

ABUTMENT REPAIRS - I
STRUCTURE NO. 084-0018 (NB) & 084-0019 (SB)

SCALE: | SHEET 59 OF 67 SHEETS | STA. | TO STA.

F.A.I. RTE.	SECTION	COUNTY	TOTAL SHEETS	SHEET NO.
55	(84-2BR-1)D,BY,BP,BRR	SANGAMON	139	101
		CONTRACT NO. 72K98		
		ILLINOIS	FED. AID PROJECT	

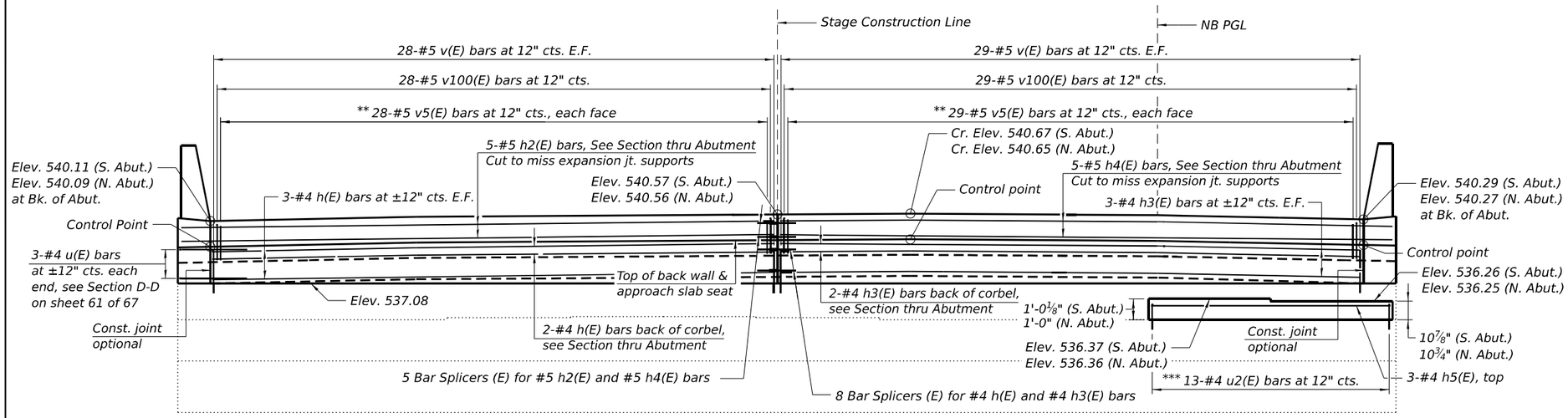

ELEVATION

(NB bridge south abutment shown, other abutments similar)

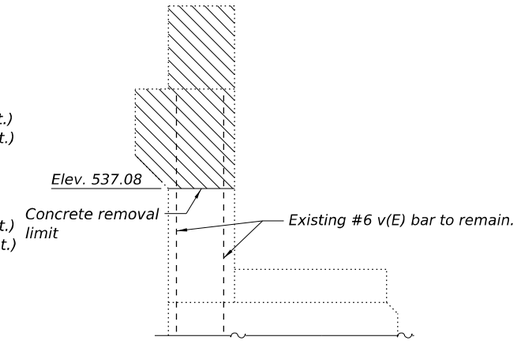

ABUTMENT REMOVAL DETAILS

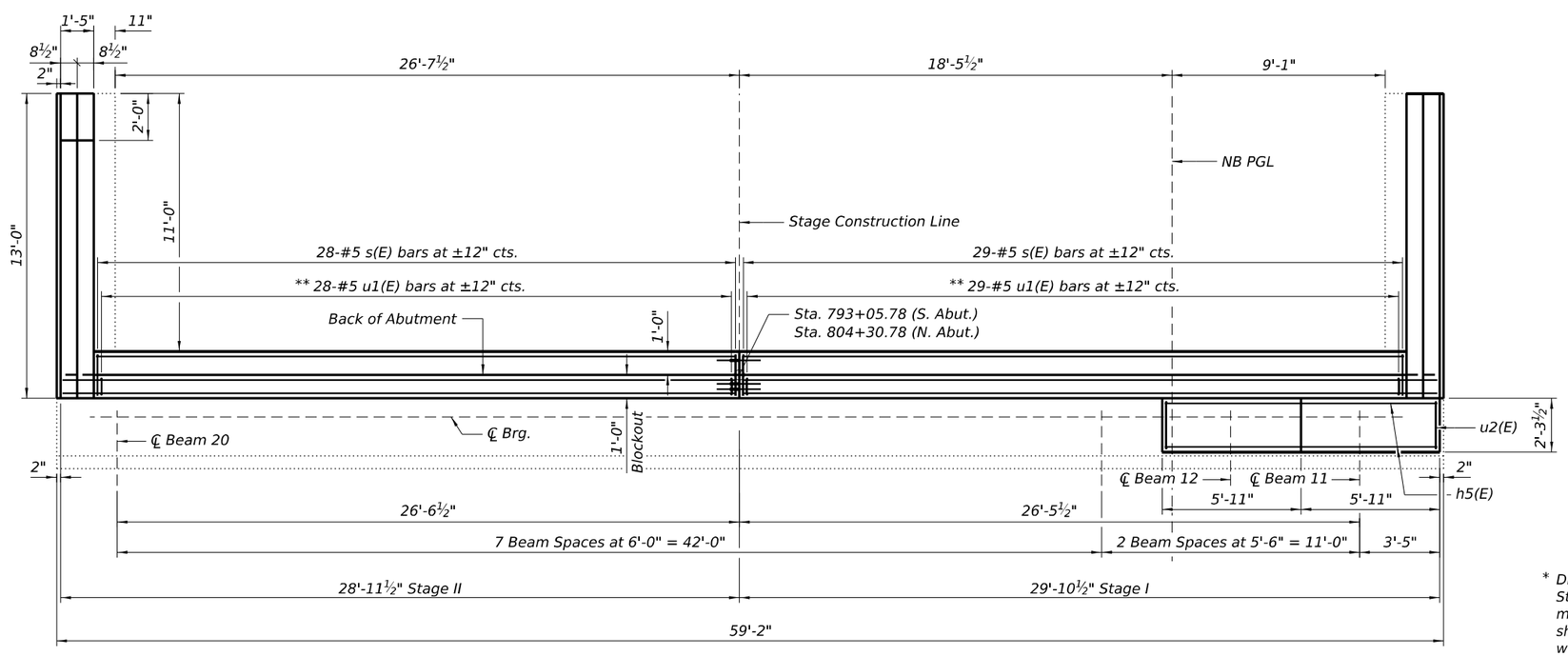

PLAN

(NB bridge south abutment shown, other abutments similar)

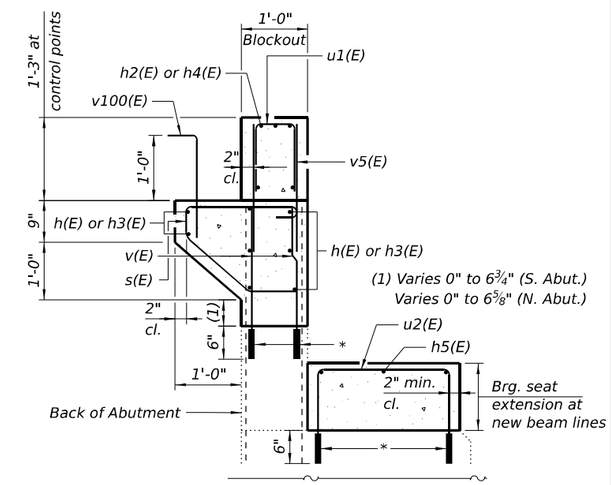

SECTION THRU ABUTMENT

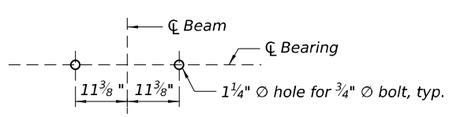

ANCHOR BOLT LAYOUT

LEGEND

Concrete Removal

* Drill and set #5 v(E) and #4 u2(E) bars according to Article 509.06 of the Standard Specification. Drilled holes shall be roughed or scored per manufacturer's recommendations. Depth of hole shall be 6". Contractor shall take all necessary precautions to prevent drilled hole interference with existing reinforcement bars.

** Spaced to miss expansion joint supports or members according to approved shop drawings and as approved by the Engineer.

*** Space to miss anchor bolts

Note:
Existing reinforcement shall be cleaned, straightened, and incorporated into the new construction. Cost included with Concrete Removal.

FILE NAME: pw://cmtengi-pw.bentley.com:cmt-connect-projects/Documents/IDOT/21094103-00/410300/Bridge/Sangamon River Bridges/CADD_Sheets/0840018 & 0840015-72K98-060-Abutment Repairs - II

CMT
License No. 184-000613
© Copyright CMT, Inc.

USER NAME = bholland	DESIGNED - BLH	REVISED -	
	DRAWN - VT/BLH	REVISED -	
PLOT SCALE = N/A	CHECKED - DH	REVISED -	
PLOT DATE = 3/21/2024	DATE - MARCH 2024	REVISED -	

STATE OF ILLINOIS
DEPARTMENT OF TRANSPORTATION

ABUTMENT REPAIRS - II
STRUCTURE NO. 084-0018 (NB) & 084-0019 (SB)

SCALE: | SHEET 60 OF 67 SHEETS | STA. | TO STA.

F.A.I. RTE.	SECTION	COUNTY	TOTAL SHEETS	SHEET NO.
55	(84-2BR-1)D,BY,BP,BRR	SANGAMON	139	102
		CONTRACT NO. 72K98		
	ILLINOIS	FED. AID PROJECT		

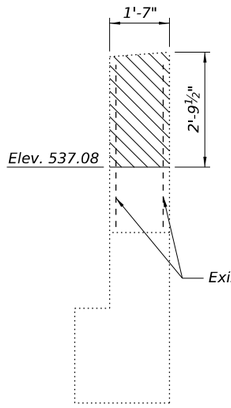

MEDIAN WING WALL REMOVAL DETAILS

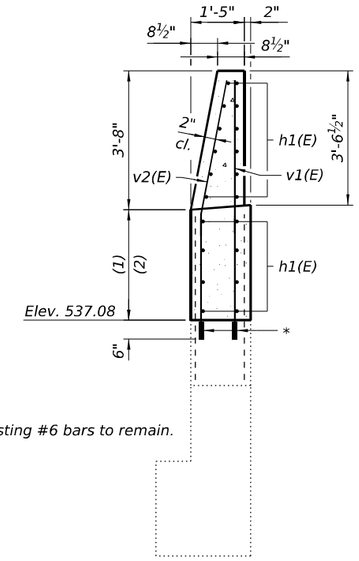

SECTION A-A

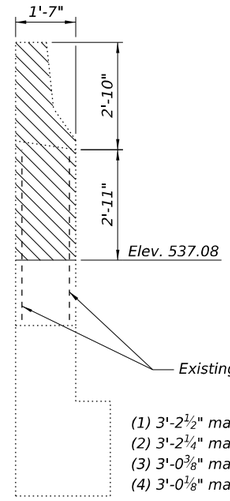

OUTSIDE WING WALL REMOVAL DETAILS

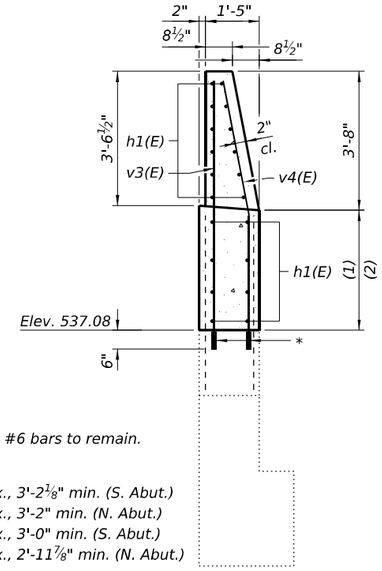

(1) 3'-2½" max., 3'-2⅛" min. (S. Abut.)
(2) 3'-2¼" max., 3'-2" min. (N. Abut.)
(3) 3'-0⅜" max., 3'-0" min. (S. Abut.)
(4) 3'-0⅛" max., 2'-11⅞" min. (N. Abut.)

SECTION B-B

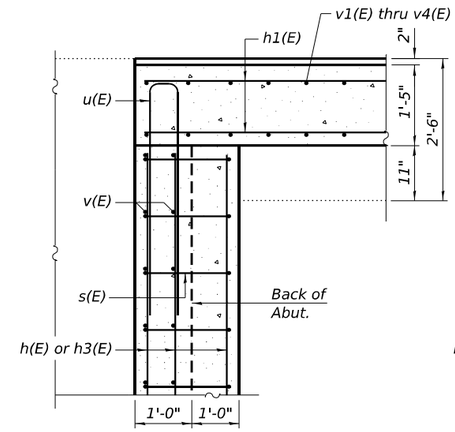

SECTION C-C

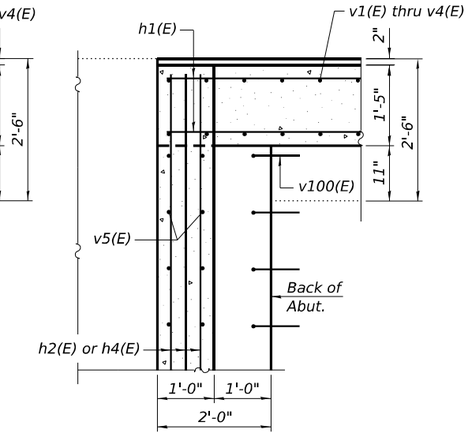

SECTION D-D

* Drill and set #5 v1(E), v2(E), v3(E), and v4(E) bars according to Article 509.06 of the Standard Specification. Drilled holes shall be roughed or scored per manufacturer's recommendations. Depth of hole shall be 6". Contractor shall take all necessary precautions to prevent drilled hole interference with existing reinforcement bars.

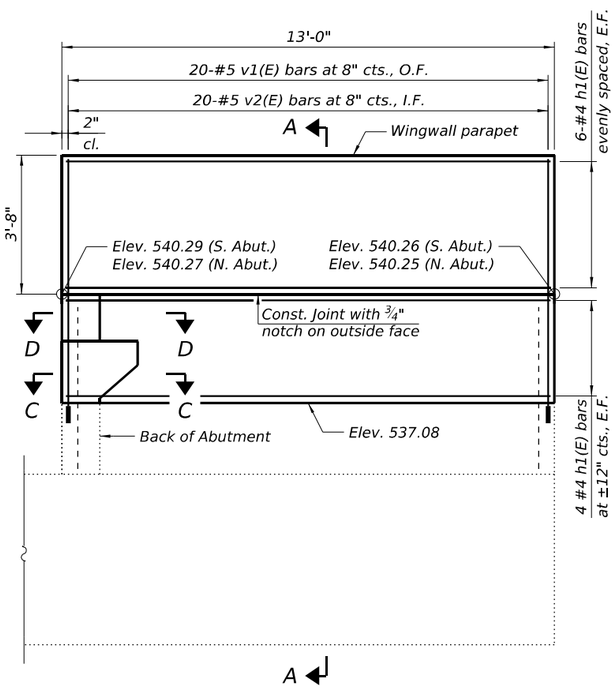

MEDIAN WING WALL ELEVATION

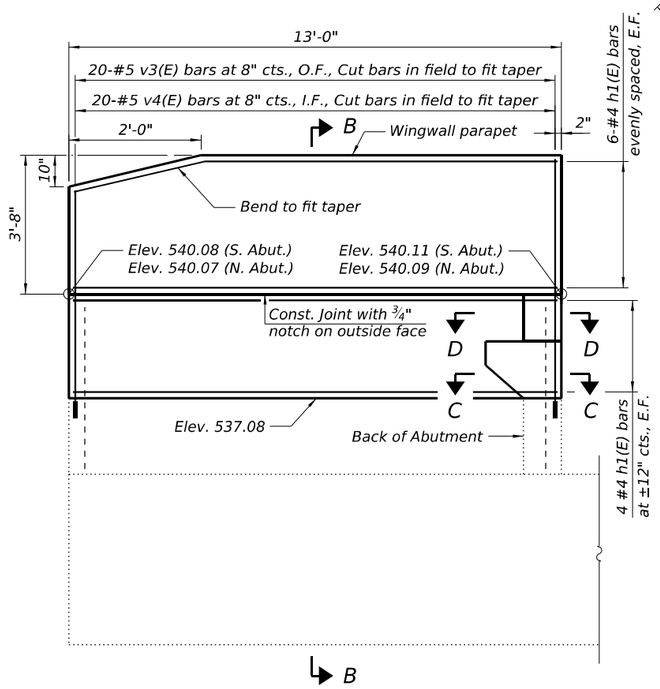

OUTSIDE WING WALL ELEVATION

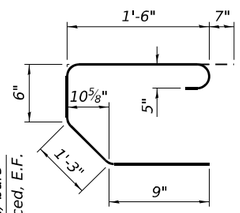

BAR s2(E)

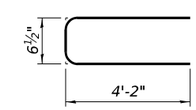

BAR u(E)

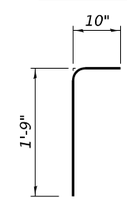

BAR v100(E)

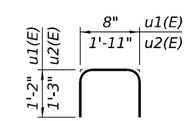

BARS u1(E) and u2(E)

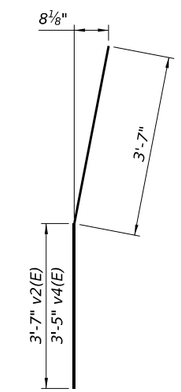

BARS v2(E) and v4(E)

BILL OF MATERIAL

Bar	No.	Size	Length	Shape
h(E)	32	#4	27'-3"	
h1(E)	160	#4	12'-8"	
h2(E)	20	#5	28'-10"	
h3(E)	32	#4	28'-2"	
h4(E)	20	#5	29'-9"	
h5(E)	12	#4	11'-6"	
s(E)	228	#5	4'-7"	
u(E)	24	#4	8'-11"	
u1(E)	228	#5	3'-0"	
u2(E)	52	#4	4'-5"	
v(E)	456	#5	1'-11"	
v1(E)	80	#5	7'-2"	
v2(E)	80	#5	7'-2"	
v3(E)	80	#5	7'-0"	
v4(E)	80	#5	7'-0"	
v5(E)	456	#5	2'-3"	
v100(E)	228	#5	2'-7"	
Concrete Removal			Cu. Yd.	53.9
Concrete Structures			Cu. Yd.	69.5
Reinforcement Bars, Epoxy Coated			Pound	10,920
Bar Splicers			Each	52
Concrete Sealer			Sq. Ft.	948

Notes:
1. Blockout area to be poured separately after superstructure falsework has been removed and after approach slab side formwork has been removed.
2. Quantity of concrete in wingwall parapet and blockout area included with Concrete Superstructure on sheet 30 of 67.
3. The top of backwall and approach slab seat shall have a constant slope determined from the control points shown.
4. Concrete Sealer shall be applied to the new concrete at the top and front faces of the blockout, backwall, bearing seats, and wingwalls.
5. Elevations at bottom of parapets shown are after grinding.
6. Existing reinforcement shall be cleaned, straightened, and incorporated into the new construction. Cost included with Concrete Removal.

LEGEND

Concrete Removal

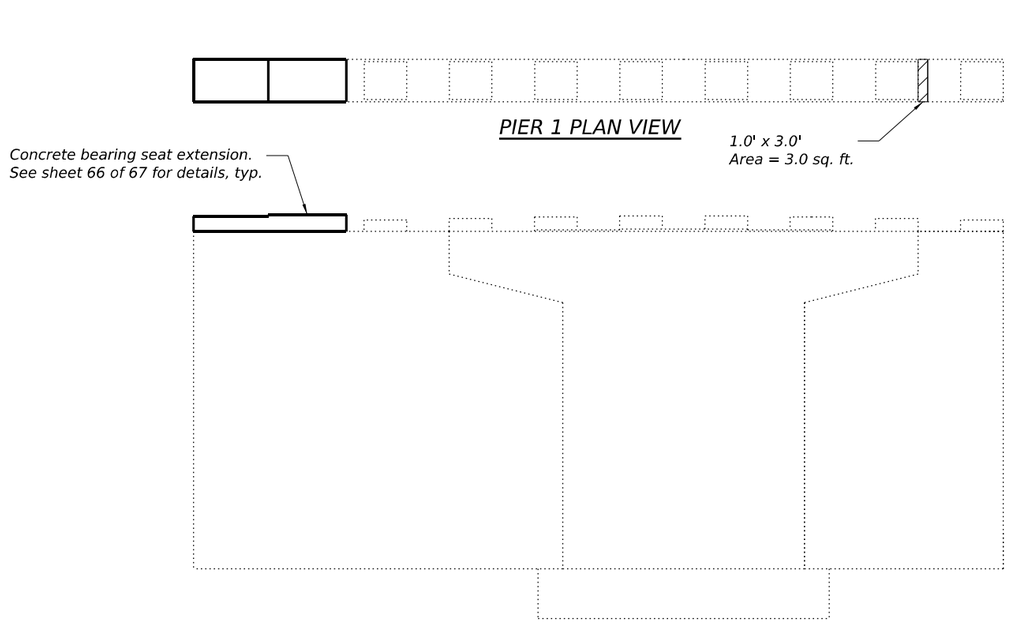

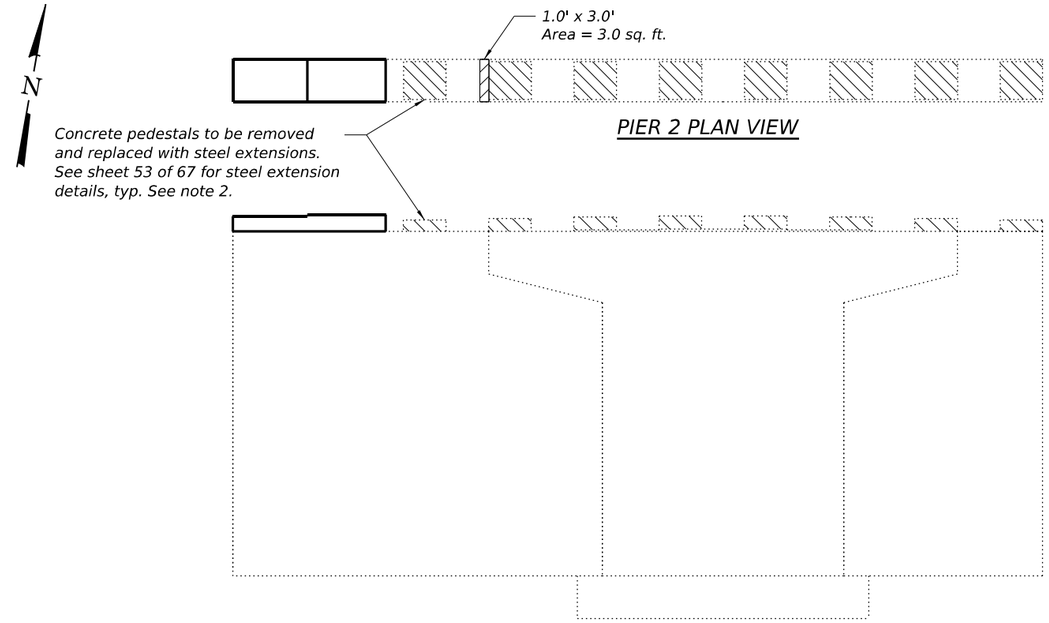

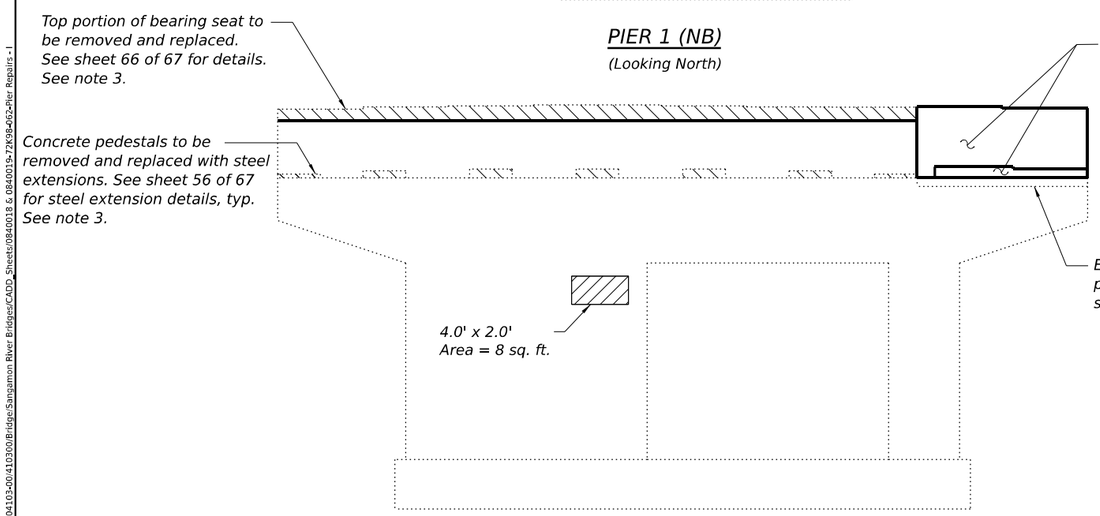

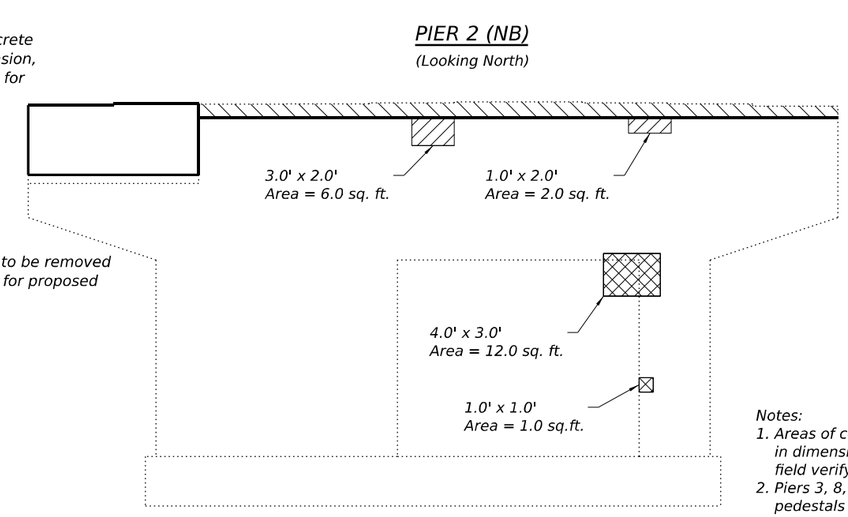

LEGEND

- Concrete Removal
- Structural Repair of Concrete (Depth Equal to or Less than 5 Inches)
- Structural Repair of Concrete (Depth Greater than 5 Inches)

BILL OF MATERIAL

ITEM	UNIT	TOTAL
Concrete Removal	Cu. Yd.	3.5
Structural Repair of Concrete (Depth Equal to or Less than 5 Inches)	Sq. Ft.	22
Structural Repair of Concrete (Depth Greater than 5 Inches)	Sq. Ft.	13

Notes:

1. Areas of concrete repairs shown are approximate in dimensions and location. The Contractor shall field verify all repair locations and areas.
2. Piers 3, 8, & 9 will also have the concrete pedestals removed and replaced with steel extensions. See sheet 53 of 67 for steel extension details. Quantity for Concrete Removal of NB Piers 3, 8, & 9 pedestals are included in the Bill of Material on this sheet.
3. Similar to Pier 7 shown on this sheet, Pier 4 will have the top portion of the Unit 3 bearing seat removed and replaced, see sheet 66 of 67 for details and quantities. The concrete pedestals for the bearings at Unit 2 will also be removed and replaced with steel extensions. See Sheet 54 of 67 for steel extension details. Quantities for Concrete Removal of the NB Piers 4 and 7 pedestals are included in the Bill of Material on this sheet.

CMT
License No. 184-000613

USER NAME = bholland	DESIGNED - DH	REVISED -	
	DRAWN - VT/BLH	REVISED -	
PLOT SCALE = N/A	CHECKED - DH	REVISED -	
PLOT DATE = 3/21/2024	DATE - MARCH 2024	REVISED -	

STATE OF ILLINOIS
DEPARTMENT OF TRANSPORTATION

PIER REPAIRS - I
STRUCTURE NO. 084-0018 (NB) & 084-0019 (SB)

SCALE: | SHEET 62 OF 67 SHEETS | STA. | TO STA.

F.A.I. RTE.	SECTION	COUNTY	TOTAL SHEETS	SHEET NO.
55	(84-2BR-1)D,BY,BP,BRR	SANGAMON	139	104
		CONTRACT NO. 72K98		
		ILLINOIS FED. AID PROJECT		

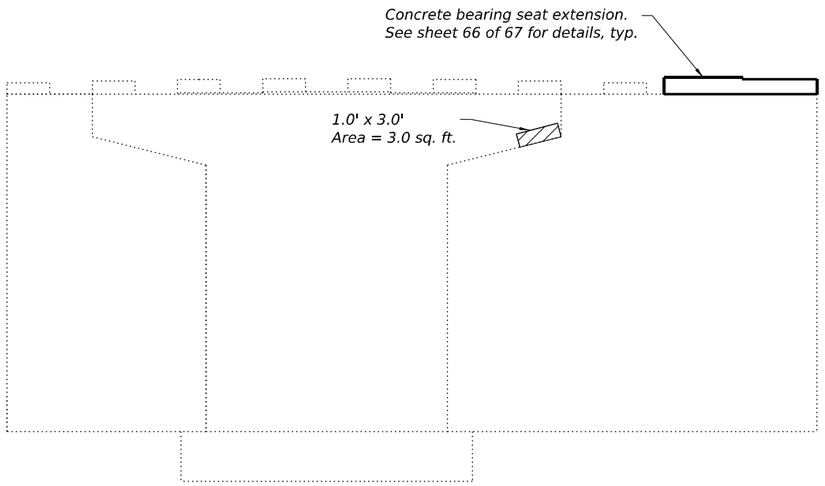

PIER 10 (NB)
(Looking South)

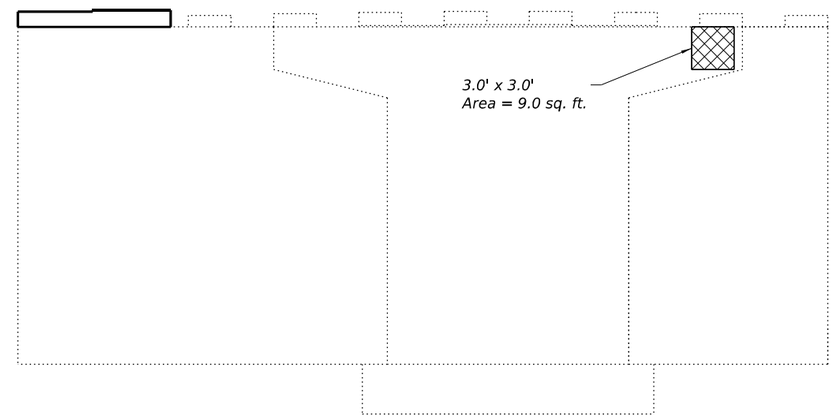

PIER 10 (NB)
(Looking North)

Note:
Areas of concrete repairs shown are approximate in dimensions and location. The Contractor shall field verify all repair locations and areas.

LEGEND

- Structural Repair of Concrete (Depth Equal to or Less than 5 Inches)
- Structural Repair of Concrete (Depth Greater than 5 Inches)

BILL OF MATERIAL

ITEM	UNIT	TOTAL
Structural Repair of Concrete (Depth Equal to or Less than 5 Inches)	Sq. Ft.	3
Structural Repair of Concrete (Depth Greater than 5 Inches)	Sq. Ft.	9

FILE NAME: pw://cmteng-pw.bentley.com:cm-connect-projects/Documents/IDOT/21004103-00/410300/Bridge/Sangamon River Bridges/CADD_Sheets/0840018 & 0840019-72K98-063-Pier Repairs - II

CMT
License No. 184-000613 © Copyright CMT, Inc.

USER NAME = bholland	DESIGNED - DH	REVISED -	
	DRAWN - VT/BLH	REVISED -	
PLOT SCALE = N/A	CHECKED - DH	REVISED -	
PLOT DATE = 3/21/2024	DATE - MARCH 2024	REVISED -	

STATE OF ILLINOIS
DEPARTMENT OF TRANSPORTATION

PIER REPAIRS - II
STRUCTURE NO. 084-0018 (NB) & 084-0019 (SB)

SCALE: | SHEET 63 OF 67 SHEETS | STA. | TO STA.

F.A.I. RTE.	SECTION	COUNTY	TOTAL SHEETS	SHEET NO.
55	(84-2BR-1)D,BY,BP,BRR	SANGAMON	139	105
		CONTRACT NO. 72K98		
	ILLINOIS	FED. AID PROJECT		

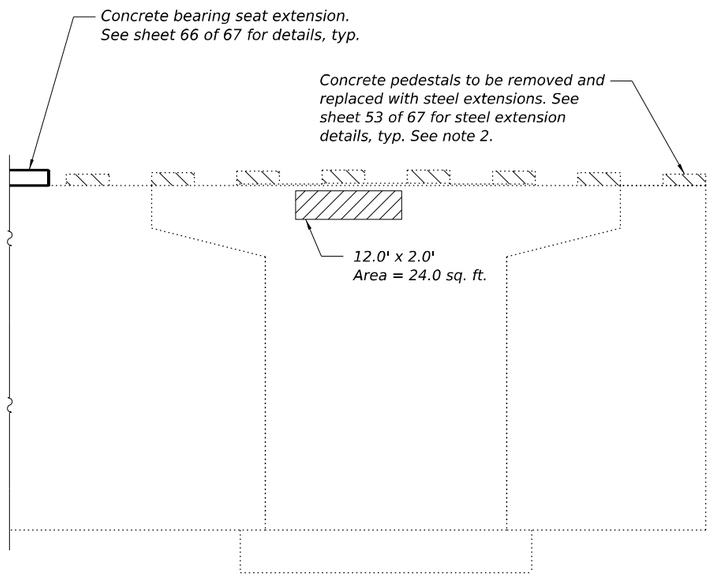

PIER 2 (SB)
(Looking South)

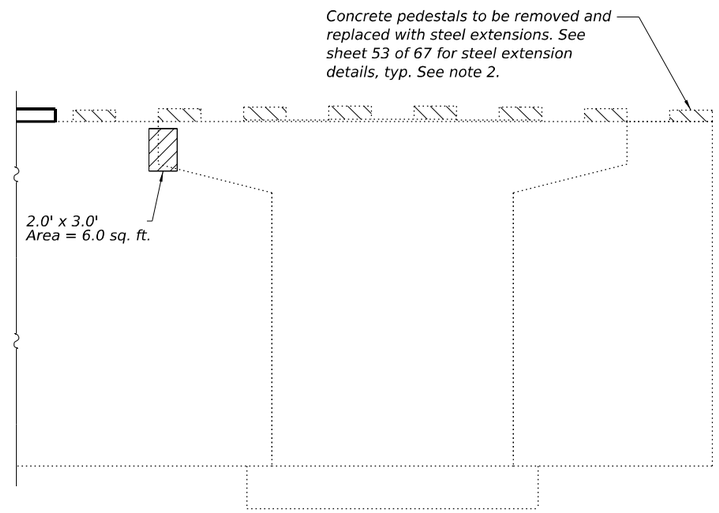

PIER 3 (SB)
(Looking South)

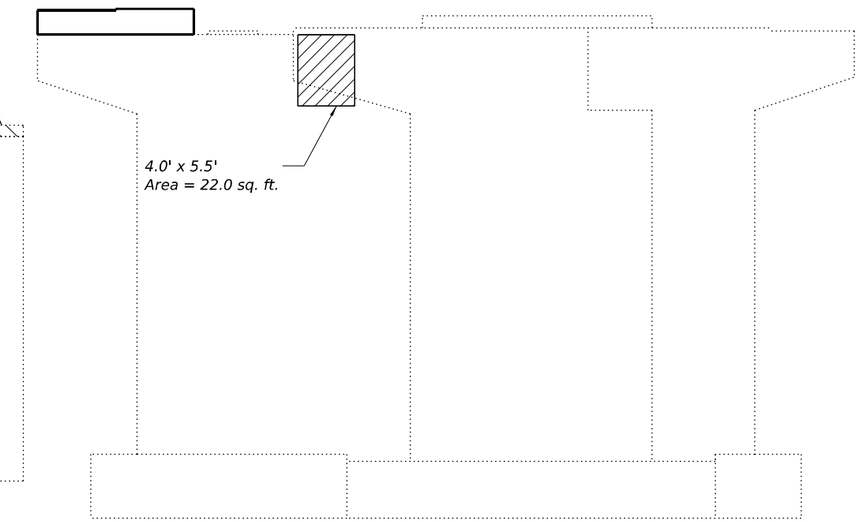

PIER 5 (SB)
(Looking South)

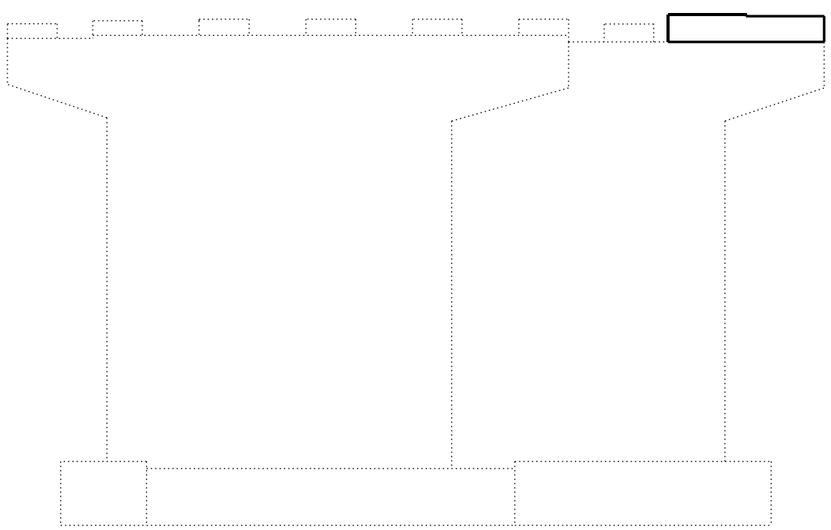

PIER 6 (SB)
(Looking North)

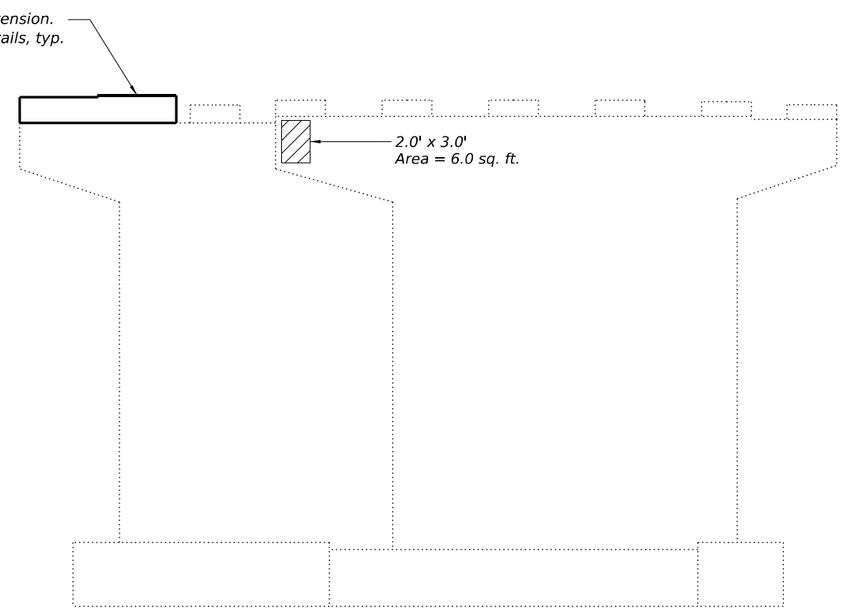

PIER 6 (SB)
(Looking South)

LEGEND

Concrete Removal

Structural Repair of Concrete (Depth Equal to or Less than 5 Inches)

BILL OF MATERIAL

ITEM	UNIT	TOTAL
Concrete Removal	Cu. Yd.	3.0
Structural Repair of Concrete (Depth Equal to or Less than 5 Inches)	Sq. Ft.	58

Notes:
1. Areas of concrete repairs shown are approximate in dimensions and location. The Contractor shall field verify all repair locations and areas.
2. Quantity for Concrete Removal of SB Piers 2 and 3 pedestals are included in the Bill of Material on this sheet.

CMT
License No. 184-000613 © Copyright CMT, Inc.

USER NAME = bholland	DESIGNED - DH	REVISED -	
	DRAWN - VT/BLH	REVISED -	
PLOT SCALE = N/A	CHECKED - DH	REVISED -	
PLOT DATE = 3/21/2024	DATE - MARCH 2024	REVISED -	

STATE OF ILLINOIS
DEPARTMENT OF TRANSPORTATION

PIER REPAIRS - III
STRUCTURE NO. 084-0018 (NB) & 084-0019 (SB)

SCALE: | SHEET 64 OF 67 SHEETS | STA. | TO STA.

F.A.I. RTE.	SECTION	COUNTY	TOTAL SHEETS	SHEET NO.
55	(84-2BR-1)D,BY,BP,BRR	SANGAMON	139	106
		CONTRACT NO.	72K98	
	ILLINOIS	FED. AID PROJECT		

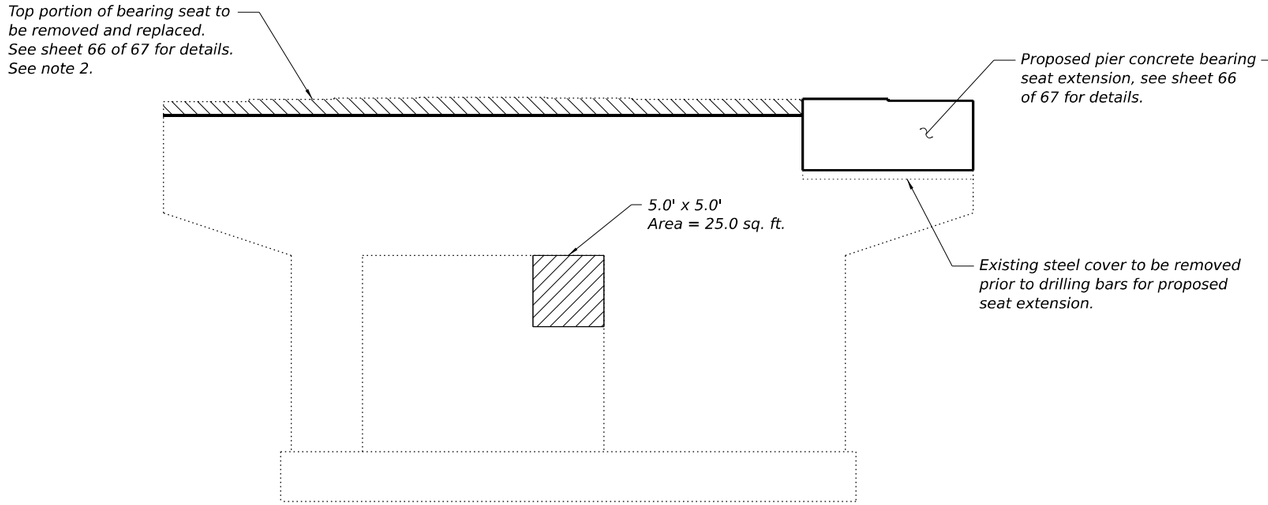

PIER 7 (SB)

(Looking North)

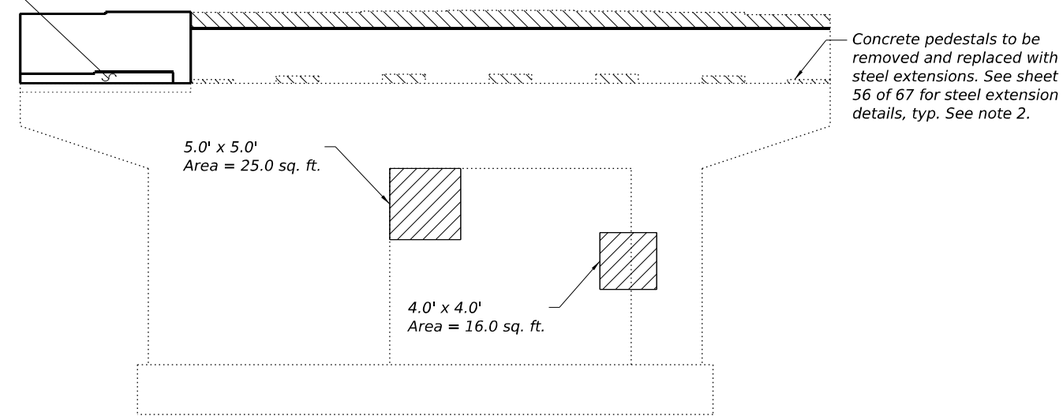

PIER 7 (SB)

(Looking South)

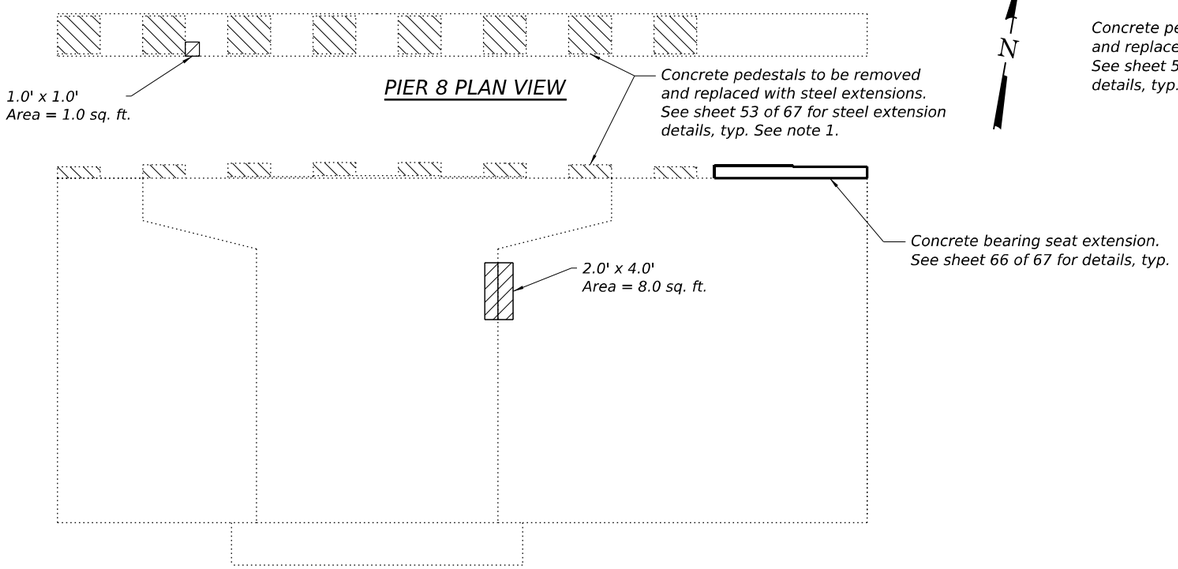

PIER 8 (SB)

(Looking North)

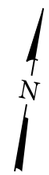

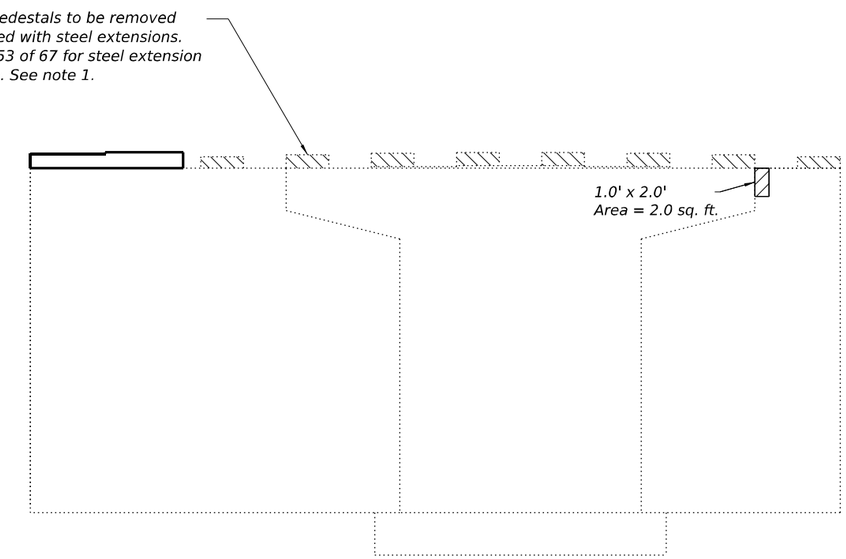

PIER 9 (SB)

(Looking South)

Notes:

1. Areas of concrete repairs shown are approximate in dimensions and location. The Contractor shall field verify all repair locations and areas.
2. Quantity for Concrete Removal of SB Piers 8 and 9 pedestals are included in the Bill of Material on this sheet.
3. Similar to Pier 7 shown on this sheet, Pier 4 will have the top portion of the Unit 3 bearing seat removed and replaced, see sheet 66 of 67 for details and quantities. The concrete pedestals for the bearings at Unit 2 will also be removed and replaced with steel extensions. See sheet 54 of 67 for steel extension details. Quantities for Concrete Removal of the SB Piers 4 and 7 pedestals are included in the Bill of Material on this sheet.

LEGEND

Concrete Removal

Structural Repair of Concrete (Depth Equal to or Less than 5 Inches)

BILL OF MATERIAL

ITEM	UNIT	TOTAL
Concrete Removal	Cu. Yd.	4.7
Structural Repair of Concrete (Depth Equal to or Less than 5 Inches)	Sq. Ft.	77

FILE NAME: pw://cmteng-pw.bentley.com:cmt-connect-projects/Documents:IDOT/21004103-00/41030/Bridge/Sangamon River Bridges/CADD_Sheets:0840018 & 0840019-72K98-065-Pier Repairs - IV

CMT

License No. 184-000613 © Copyright CMT Inc.

USER NAME = bholland	DESIGNED - DH	REVISED -	
	DRAWN - VT/BLH	REVISED -	
PLOT SCALE = N/A	CHECKED - DH	REVISED -	
PLOT DATE = 3/21/2024	DATE - MARCH 2024	REVISED -	

STATE OF ILLINOIS
DEPARTMENT OF TRANSPORTATION

PIER REPAIRS - IV
STRUCTURE NO. 084-0018 (NB) & 084-0019 (SB)

SCALE: SHEET 65 OF 67 SHEETS STA. TO STA.

F.A.I. RTE.	SECTION	COUNTY	TOTAL SHEETS	SHEET NO.
55	(84-2BR-1)D,BY,BP,BRR	SANGAMON	139	107
		CONTRACT NO. 72K98		
		ILLINOIS	FED. AID PROJECT	

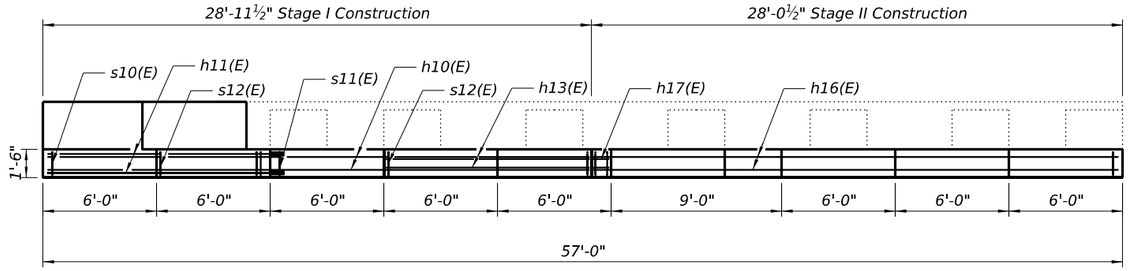

PLAN

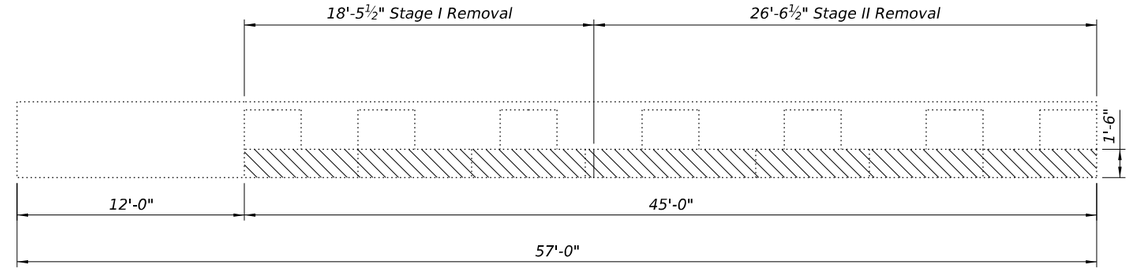

PLAN

(Showing concrete removal)

(1) 4-#5 h11(E) at ± 12" cts.

* Drill and set #5 h11(E), #6 s10(E), #6 s11(E) and #4 s13(E) thru s19(E) bars according to Article 509.06 of the Standard Specifications. Drilled holes shall be roughed or scored per manufacturer's recommendations. Depth of hole shall be 6". Contractor shall take all necessary precautions to prevent drilled hole interference with existing reinforcement bars.

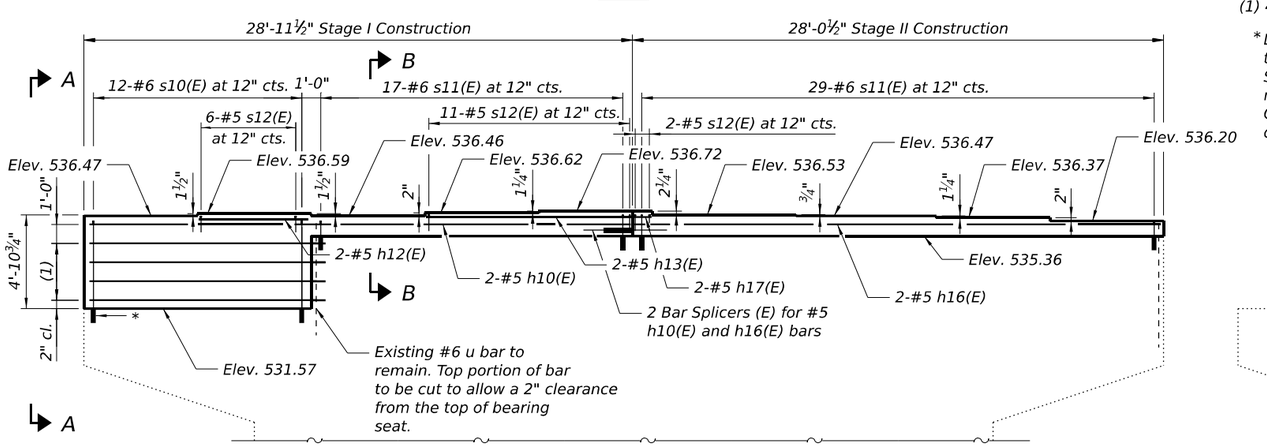

ELEVATION

(Looking north on NB Pier 4 & 7)
(Looking south on SB Pier 4 & 7)

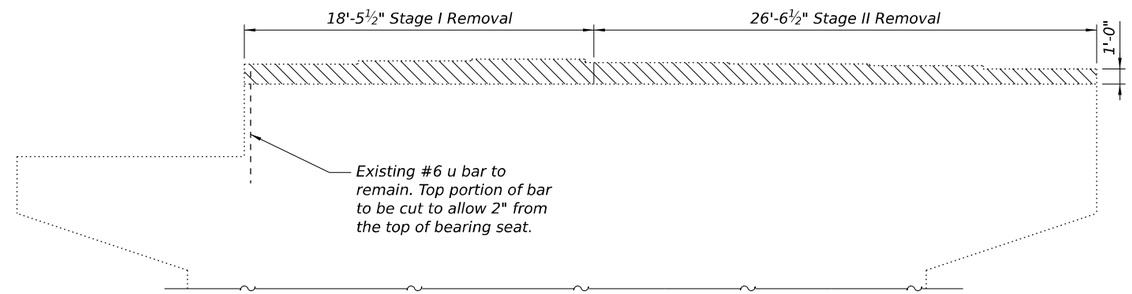

ELEVATION

(Showing concrete removal)
(Looking north on NB Pier 4 & 7)
(Looking south on SB Pier 4 & 7)

LEGEND

Concrete Removal

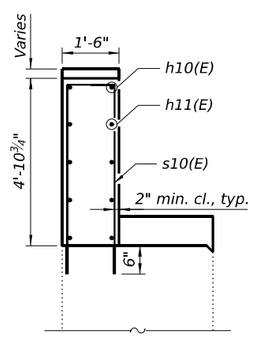

SECTION A-A

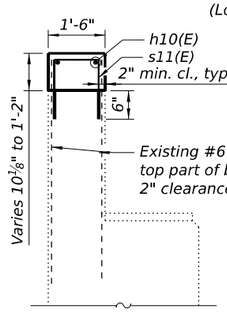

SECTION B-B

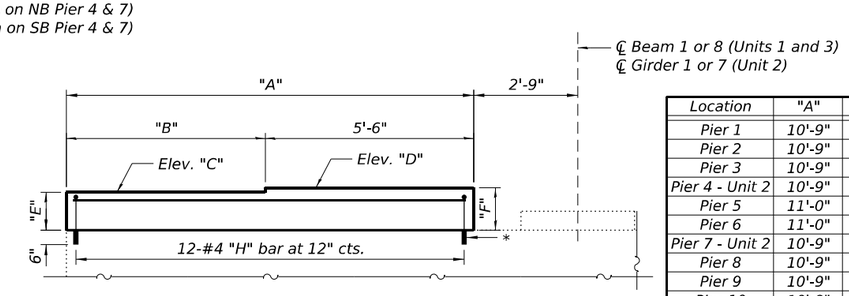

ELEVATION

(Showing concrete bearing seat extension)
(SB bridge shown, NB bridge similar)

Location	"A"	"B"	"C"	"D"	"E"	"F"	"G"	Bar "H"	"I"
Pier 1	10'-9"	5'-3"	536.36	536.47	1'-0¾"	1'-2⅛"	3'-0"	s13(E)	2'-6"
Pier 2	10'-9"	5'-3"	536.38	536.49	11¾"	1'-1⅛"	3'-0"	s14(E)	2'-6"
Pier 3	10'-9"	5'-3"	536.30	536.41	9⅜"	10¾"	3'-0"	s15(E)	2'-6"
Pier 4 - Unit 2	10'-9"	5'-3"	532.44	532.55	10½"	11¾"	2'-6"	s16(E)	2'-6"
Pier 5	11'-0"	5'-6"	532.28	532.39	1'-8½"	1'-9¾"	4'-0"	s17(E)	2'-9"
Pier 6	11'-0"	5'-6"	532.17	532.28	1'-9⅝"	1'-11"	4'-0"	s18(E)	2'-9"
Pier 7 - Unit 2	10'-9"	5'-3"	532.23	532.34	8"	9¼"	2'-6"	s19(E)	2'-6"
Pier 8	10'-9"	5'-3"	536.31	536.42	9½"	10⅞"	3'-0"	s15(E)	2'-6"
Pier 9	10'-9"	5'-3"	536.39	536.50	11⅞"	1'-1½"	3'-0"	s14(E)	2'-6"
Pier 10	10'-9"	5'-3"	536.36	536.47	1'-0¾"	1'-2⅛"	3'-0"	s13(E)	2'-6"

BILL OF MATERIAL

Bar	No.	Size	Length	Shape
h10(E)	8	#5	28'-8"	
h11(E)	32	#5	12'-4"	
h12(E)	8	#5	5'-8"	
h13(E)	8	#5	10'-8"	
h14(E)	48	#4	10'-5"	
h15(E)	16	#4	10'-8"	
h16(E)	8	#5	27'-9"	
h17(E)	8	#5	9"	
s10(E)	48	#6	11'-6"	
s11(E)	184	#6	3'-4"	
s12(E)	76	#5	5'-10"	
s13(E)	48	#4	5'-3"	
s14(E)	48	#4	5'-1"	
s15(E)	48	#4	4'-8"	
s16(E)	24	#4	4'-5"	
s17(E)	24	#4	7'-4"	
s18(E)	24	#4	7'-6"	
s19(E)	24	#4	4'-0"	
Concrete Removal			Cu. Yd.	10.9
Concrete Structures			Cu. Yd.	54.4
Reinforcement Bars, Epoxy Coated			Pound	4,540
Bar Splicers			Each	8
Concrete Sealer			Sq. Ft.	2,541

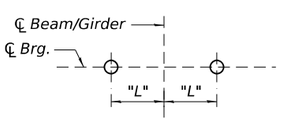

ANCHOR BOLT LAYOUT

Pier	"L"
1 & 10	8"
2, 3, 8, & 9	14½"
4 - Unit 3, 7 - Unit 1	11⅞"
4 - Unit 2	13⅜"
7 - Unit 2	13⅞"

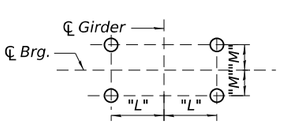

ANCHOR BOLT LAYOUT

Pier	"L"	"M"
5	10"	5½"
6	11¼"	5¼"

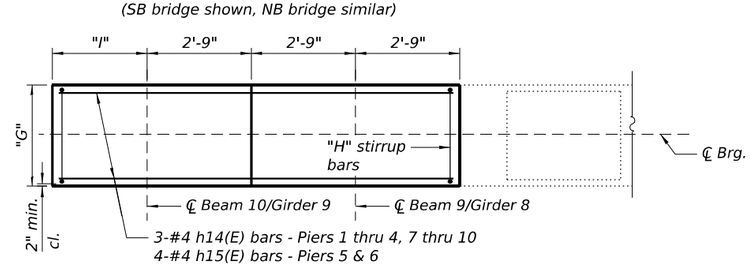

PLAN

(SB bridge shown, NB bridge similar)

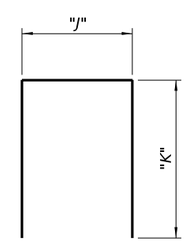

BARS s10(E) thru s19(E)

Bar	"J"	"K"
s10(E)	1'-0"	5'-3"
s11(E)	1'-0"	1'-2"
s12(E)	1'-0"	2'-5"
s13(E)	2'-6"	1'-4½"
s14(E)	2'-6"	1'-3½"
s15(E)	2'-6"	1'-1"
s16(E)	2'-0"	1'-2½"
s17(E)	3'-3"	2'-0½"
s18(E)	3'-3"	2'-1½"
s19(E)	2'-0"	1'-0"

Note:
1. Concrete Sealer shall be applied to all new surfaces of new concrete.
2. Existing reinforcement shall be cleaned, straightened, and incorporated into the new construction. Cost included with Concrete Removal.

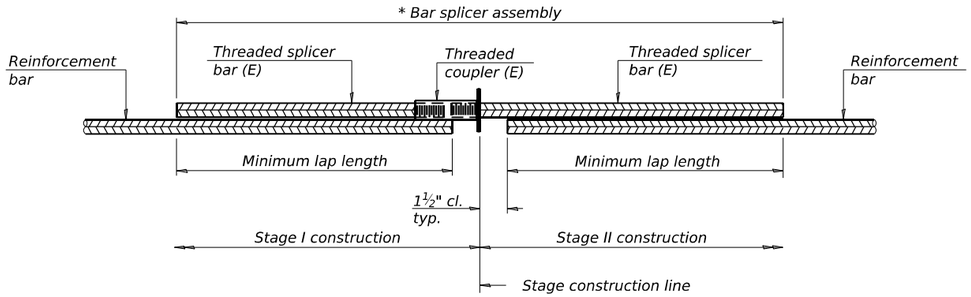

STANDARD BAR SPLICER ASSEMBLY PLAN

Only bar splicer assemblies as presented on the approved QPL list may be used.

Threaded splicer bar length = min. lap length + 1½" + thread length

* Epoxy not required on Bar Splicer Assembly components used in conjunction with black bars.

Location	Bar size	No. assemblies required	Minimum lap length
NB & SB Unit 1 Deck	#5	1,890	3'-6"
NB & SB Unit 1 Deck S. Dia.	#5	5	3'-6"
NB & SB Unit 1 Deck S. Dia.	#6	3	**
NB & SB Unit 1 Pier 7 Mod. Joint	#5	238	3'-6"
NB & SB Unit 1 Pier 7 Mod. Joint	#6	44	**
NB & SB Unit 2 Deck	#5	3,244	3'-6"
NB & SB Unit 2 Pier 7 Mod. Joint	#5	236	3'-6"
NB & SB Unit 2 Pier 7 Mod. Joint	#6	44	***
NB & SB Unit 2 Pier 4 Mod. Joint	#5	236	3'-6"
NB & SB Unit 2 Pier 4 Mod. Joint	#6	44	***
NB & SB Unit 3 Deck	#5	1,890	3'-6"
NB & SB Unit 3 Deck N. Dia.	#5	5	3'-6"
NB & SB Unit 3 Deck N. Dia.	#6	3	**
NB & SB Unit 3 Pier 4 Mod. Joint	#5	238	3'-6"
NB & SB Unit 3 Pier 4 Mod. Joint	#6	44	**
NB & SB S. Approach Slab	#5	134	3'-6"
NB & SB S. Approach Slab	#8	120	4'-9"
NB & SB N. Approach Slab	#5	134	3'-6"
NB & SB N. Approach Slab	#8	120	4'-9"
NB & SB S. Abut. Corbel	#4	16	2'-5"
NB & SB S. Abut. Blockout	#5	10	3'-6"
NB & SB N. Abut. Corbel	#4	16	2'-5"
NB & SB N. Abut. Blockout	#5	10	3'-6"
NB & SB Piers 4 & 7	#5	8	3'-6"

** 3'-3" minimum lap on Stage I side, 2'-4" bar on Stage II side.
*** 1'-9" minimum lap on Stage I side, 5'-4" bar on Stage II side.

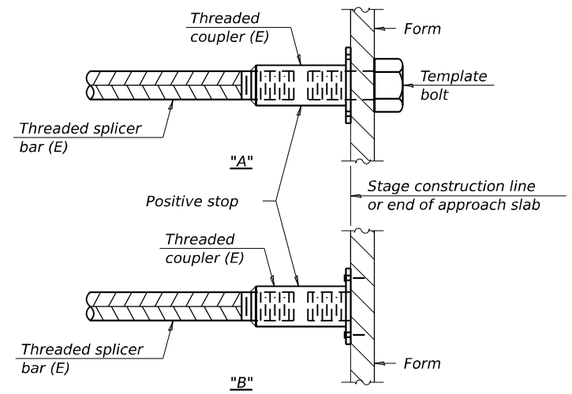

INSTALLATION AND SETTING METHODS

"A" : Set bar splicer assembly by means of a template bolt.
"B" : Set bar splicer assembly by nailing to wood forms or cementing to steel forms.
(E) : Indicates epoxy coating.

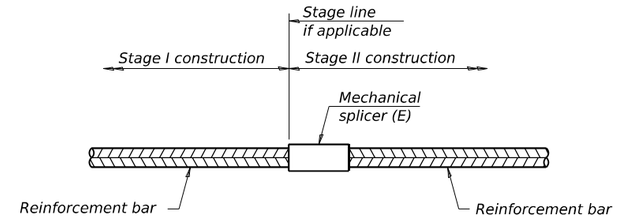

STANDARD MECHANICAL SPLICER

Location	Bar size	No. assemblies required

Notes:
Splicer bars shall be deformed with threaded ends and have a minimum 60 ksi yield strength.
All reinforcement shall be lapped and tied to the splicer bars.
Bar splicer assemblies shall be epoxy coated according to the requirements for reinforcement bars. See Section 508 of the Standard Specifications.
See approved list of bar splicer assemblies and mechanical splicers for alternatives.

BSD-1 5-15-2023

CMT License No. 184-000613 © Copyright CMT, Inc.

USER NAME = bholland	DESIGNED - BLH	REVISED -	
	DRAWN - BLH	REVISED -	
PLOT SCALE = N/A	CHECKED - DH	REVISED -	
PLOT DATE = 3/21/2024	DATE - MARCH 2024	REVISED -	

STATE OF ILLINOIS
DEPARTMENT OF TRANSPORTATION

BAR SPLICER DETAILS
STRUCTURE NO. 084-0018 (NB) & 084-0019 (SB)

SCALE: SHEET 67 OF 67 SHEETS STA. TO STA.

F.A.I. RTE.	SECTION	COUNTY	TOTAL SHEETS	SHEET NO.
55	(84-2BR-1)D,BY,BP,BRR	SANGAMON	139	109
		CONTRACT NO. 72K98		
		ILLINOIS FED. AID PROJECT		

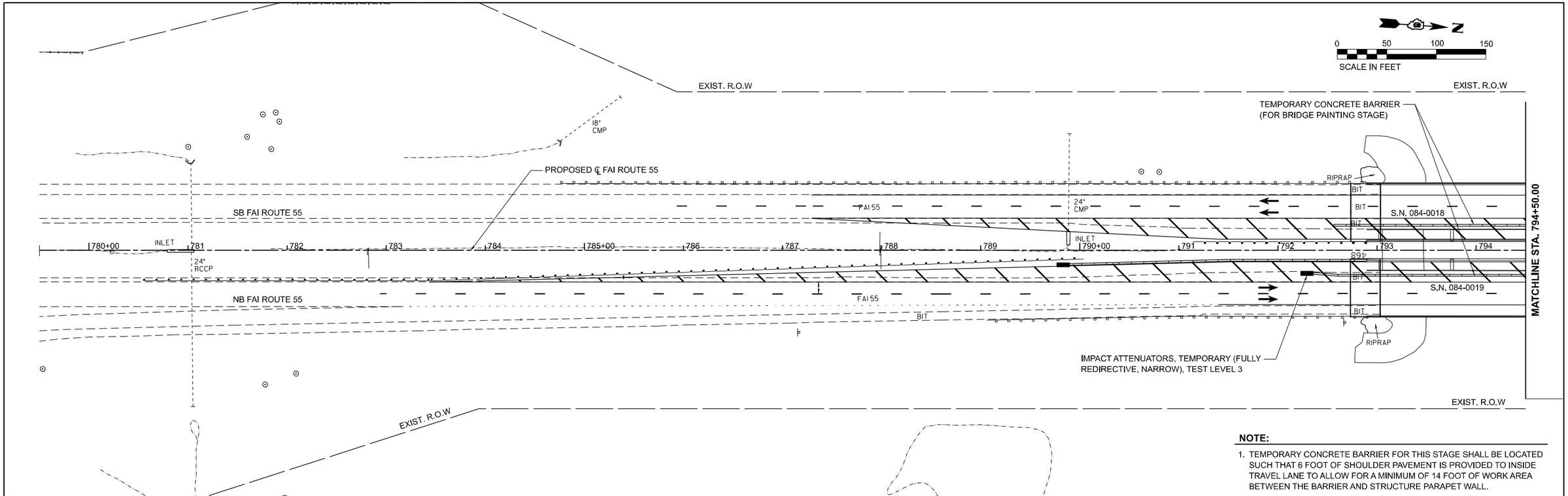

NOTE:

1. TEMPORARY CONCRETE BARRIER FOR THIS STAGE SHALL BE LOCATED SUCH THAT 6 FOOT OF SHOULDER PAVEMENT IS PROVIDED TO INSIDE TRAVEL LANE TO ALLOW FOR A MINIMUM OF 14 FOOT OF WORK AREA BETWEEN THE BARRIER AND STRUCTURE PARAPET WALL.

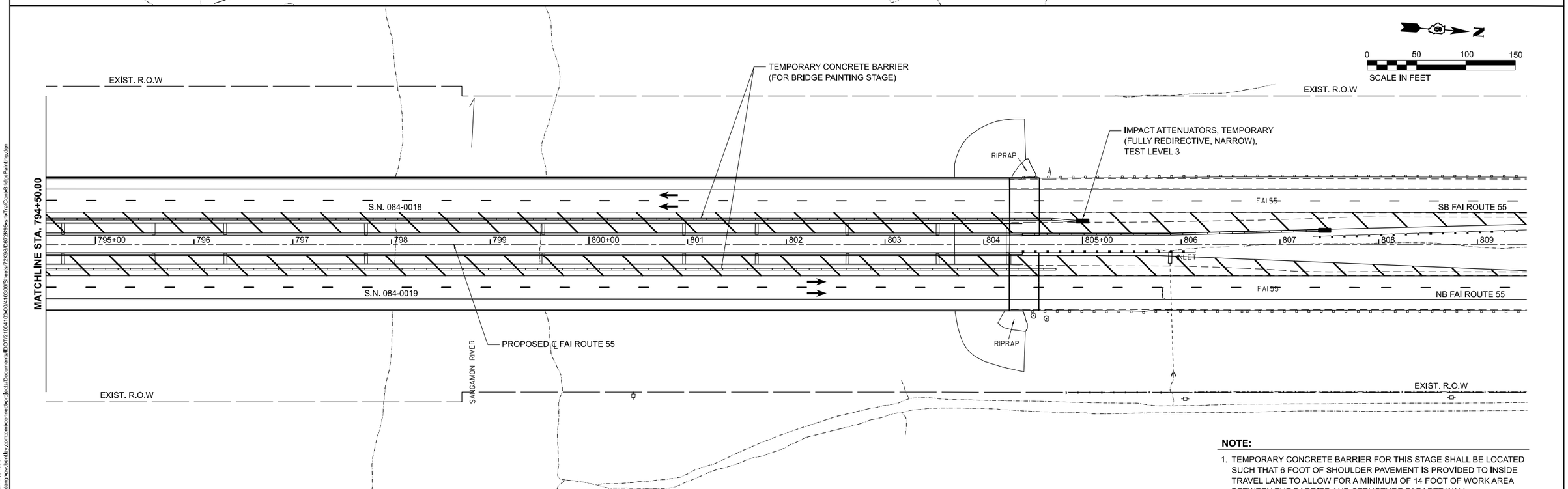

NOTE:

1. TEMPORARY CONCRETE BARRIER FOR THIS STAGE SHALL BE LOCATED SUCH THAT 6 FOOT OF SHOULDER PAVEMENT IS PROVIDED TO INSIDE TRAVEL LANE TO ALLOW FOR A MINIMUM OF 14 FOOT OF WORK AREA BETWEEN THE BARRIER AND STRUCTURE PARAPET WALL.

MODEL: PR_I55 - Plan 1 [Sheet]
FILE NAME: pw://cmelangroup.bentley.com:cmel-connect-projects/Documents/IDOT21004105-40141030/Sheets/72K98/0572K98-sht-TrafficControlBridgePainting.dgn

USER NAME = rheady	DESIGNED - KLT	REVISED -	
	DRAWN - RAH	REVISED -	
PLOT SCALE = 0.16660000 ' / in.	CHECKED - KLT	REVISED -	
PLOT DATE = 3/27/2024	DATE - MARCH 2024	REVISED -	

STATE OF ILLINOIS
DEPARTMENT OF TRANSPORTATION

FAI ROUTE 55 - INTERSTATE 55
TRAFFIC CONTROL FOR BRIDGE PAINTING

SCALE: 1" = 50' | SHEET 1 OF 1 SHEETS | STA. 779+50 TO STA. 809+50

F.A.I. RTE.	SECTION	COUNTY	TOTAL SHEETS	SHEET NO.
I-55	(84-2BR-1)D,BY,BP,BRR	SANGAMON	139	110
		CONTRACT NO. 72K98		
		ILLINOIS	FED. AID PROJECT	

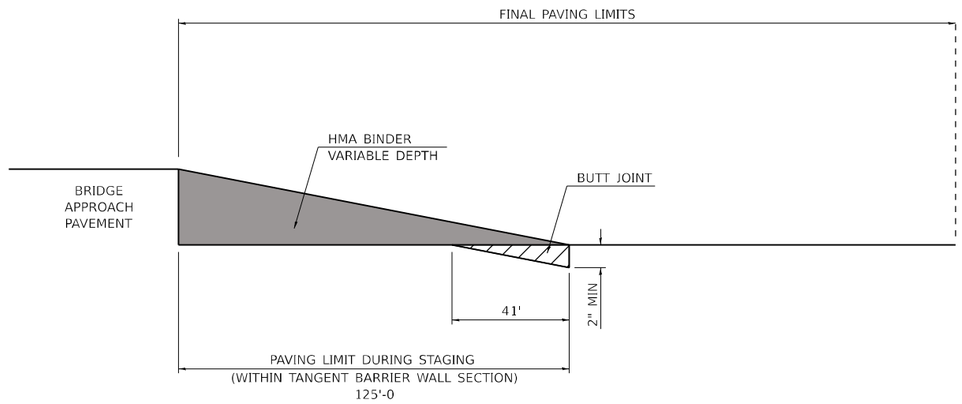

INTERIM STAGE RAMP PAVING DETAIL

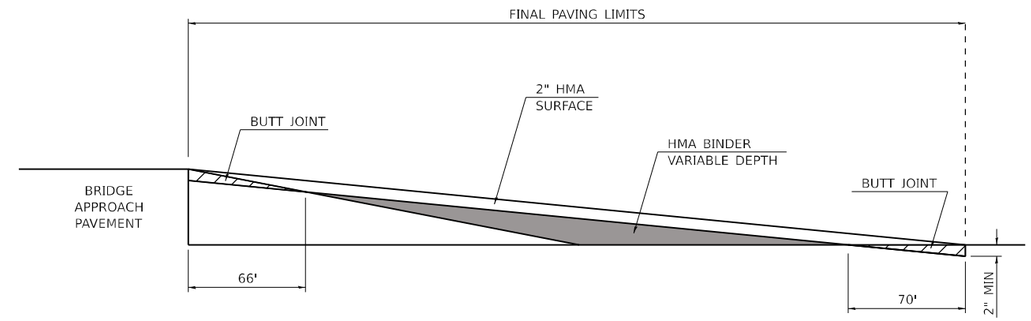

FINAL RAMP PAVING DETAIL

MODEL: Detail01 [Sheet]
FILE NAME: pw://cmtengp-pw.bentley.com:cmt-connect-projects/Documents/IDOT/21094103-00/410300/Sheets/72K98/D672K98-lht-details Const001.dgn

CMT
License No. 184-000613 © Copyright CMT, Inc.

USER NAME = rheady	DESIGNED - IDOT	REVISED -	
	DRAWN - IDOT	REVISED -	
PLOT SCALE = 0.16666667 ' / in.	CHECKED - KLT	REVISED -	
PLOT DATE = 3/28/2024	DATE - $SUBMITDATE$	REVISED -	

STATE OF ILLINOIS
DEPARTMENT OF TRANSPORTATION

FAI ROUTE 55 - INTERSTATE 55
CONSTRUCTION DETAILS - I

SCALE: N.T.S. | SHEET 1 OF 1 SHEETS | STA. TO STA.

F.A.I. RTE.	SECTION	COUNTY	TOTAL SHEETS	SHEET NO.
55	(84-2BR-1)D, BY,BP, BRR	SANGAMON	139	111
		CONTRACT NO. 72K98		
	ILLINOIS	FED. AID PROJECT		

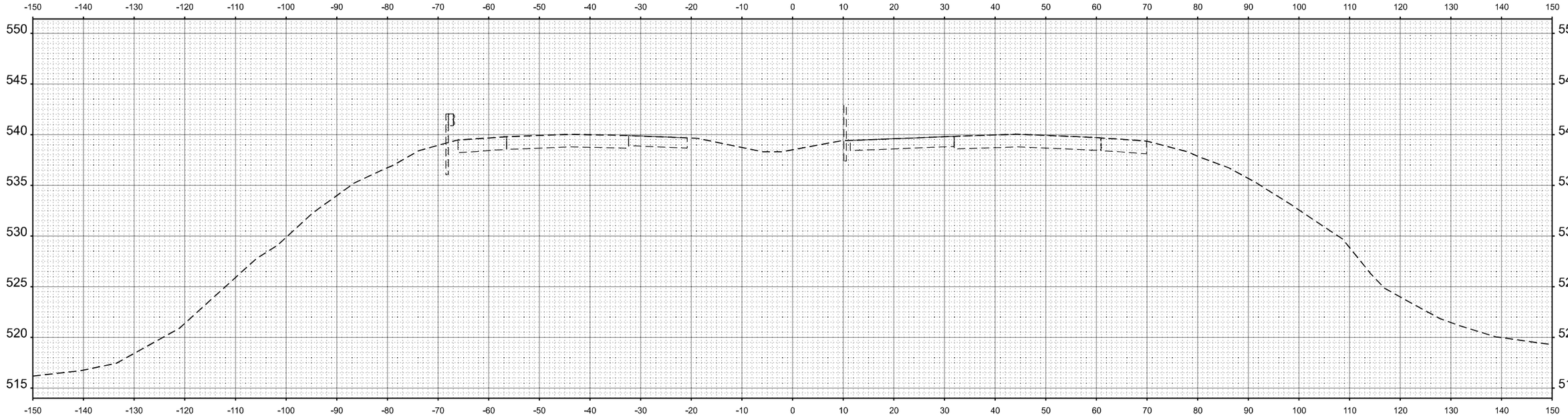

STA 789+00.00

MODEL: SHT-XS-014
FILE NAME: pw://cmengnw.bentley.com:cmeconnect-eu-projects/Documents/DOT21004 10340041030/Sheets/72K98/DM72K98-sh-xs

CMT License No. 184-000613 © Copyright CMT, Inc.	USER NAME = rheady	DESIGNED - MJO	REVISED -	STATE OF ILLINOIS DEPARTMENT OF TRANSPORTATION	FAI ROUTE 55 - INTERSTATE 55 CROSS SECTIONS			F.A.I. RTE.	SECTION	COUNTY	TOTAL SHEETS / SHEET NO.
		DRAWN - VJR	REVISED -					55	(84-2BR-1)D,BY,BP,BRR	SANGAMON	139 / 112
	PLOT SCALE = 0.16660000 ' / in.	CHECKED - KLT	REVISED -							CONTRACT NO. 72K98	
	PLOT DATE = 3/25/2024	DATE - MARCH 2024	REVISED -		SCALE: 1"=10'	SHEET OF SHEETS	STA. TO STA.		ILLINOIS	FED. AID PROJECT	

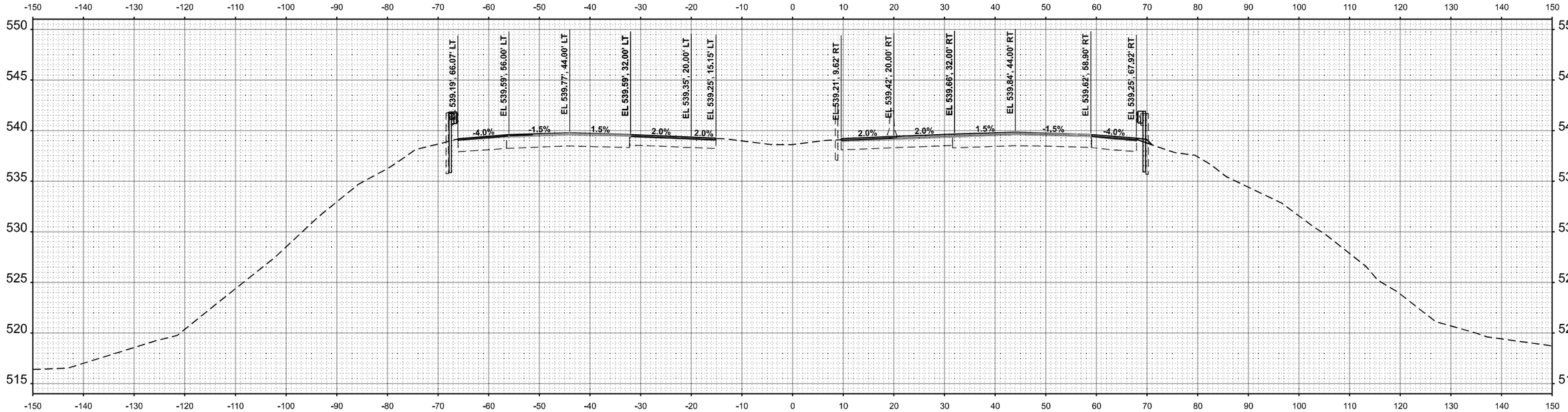

STA 790+00.00

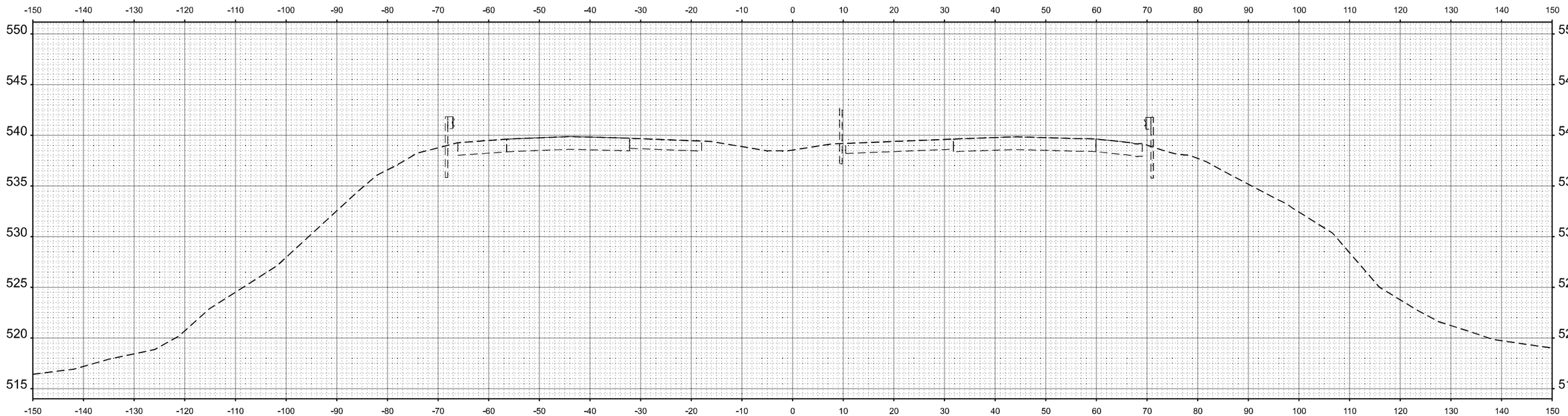

STA 789+50.00

MODEL: SHT-XS-015
FILE NAME: pw://cmengnow.bentley.com:cmenc-connect-eco/projects/Documents/IDOT/21004/10400410300/Sheets/72K98/D872K98sht-xs

CMT
License No. 184-000613 © Copyright CMT, Inc.

USER NAME = rheady	DESIGNED - MJO	REVISED -
	DRAWN - VJR	REVISED -
PLOT SCALE = 0.16660000 ' / in.	CHECKED - KLT	REVISED -
PLOT DATE = 3/25/2024	DATE - MARCH 2024	REVISED -

STATE OF ILLINOIS
DEPARTMENT OF TRANSPORTATION

FAI ROUTE 55 - INTERSTATE 55
CROSS SECTIONS

SCALE: 1"=10' | SHEET OF SHEETS | STA. TO STA.

F.A.I. RTE.	SECTION	COUNTY	TOTAL SHEETS	SHEET NO.
55	(84-2BR-1)D,BY,BP,BRR	SANGAMON	139	113

CONTRACT NO. 72K98

ILLINOIS FED. AID PROJECT

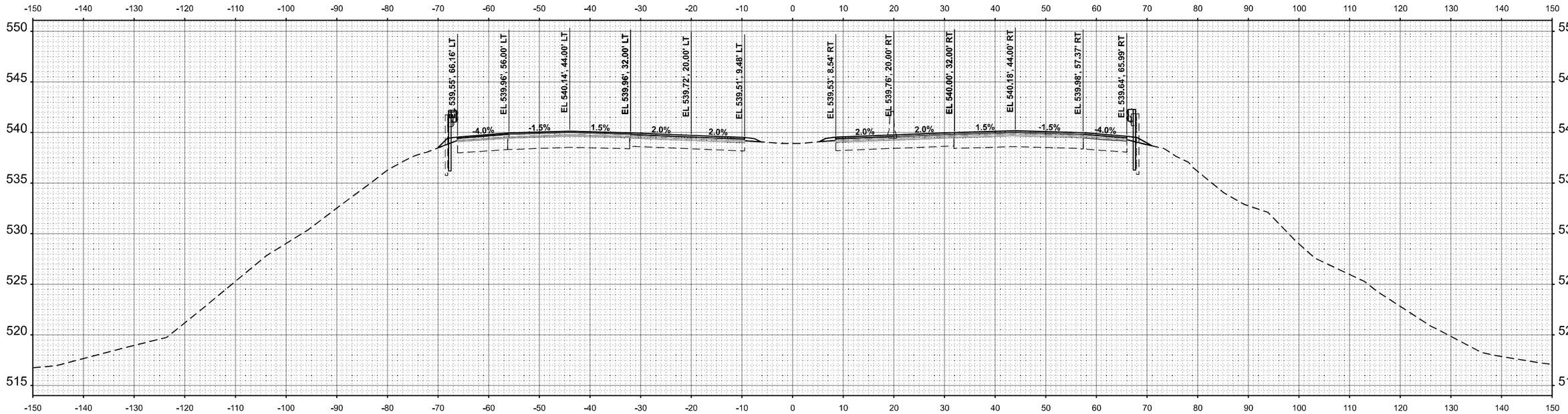

STA 791+00.00

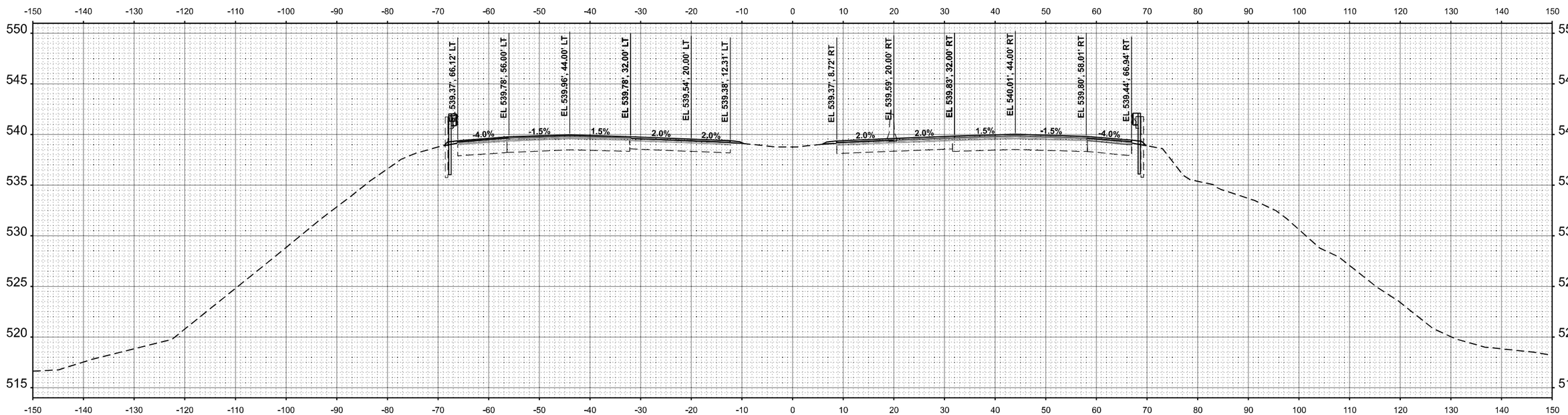

STA 790+50.00

MODEL: SHT-XS-016
FILE NAME: pw://cmtengrgw.bentley.com:cmtengrgw-connect-eu-projects/Documents/DOT21004 10400410300/Sheets/72K98/D872K98sht-xs

CMT
License No. 184-000613 © Copyright CMT, Inc.

USER NAME = rheady	DESIGNED - MJO	REVISED -	
	DRAWN - VJR	REVISED -	
PLOT SCALE = 0.16660000 ' / in.	CHECKED - KLT	REVISED -	
PLOT DATE = 3/25/2024	DATE - MARCH 2024	REVISED -	

STATE OF ILLINOIS
DEPARTMENT OF TRANSPORTATION

FAI ROUTE 55 - INTERSTATE 55
CROSS SECTIONS

SCALE: 1"=10' | SHEET OF SHEETS | STA. TO STA.

F.A.I. RTE.	SECTION	COUNTY	TOTAL SHEETS	SHEET NO.
55	(84-2BR-1)D,BY,BP,BRR	SANGAMON	139	114

CONTRACT NO. 72K98

ILLINOIS | FED. AID PROJECT

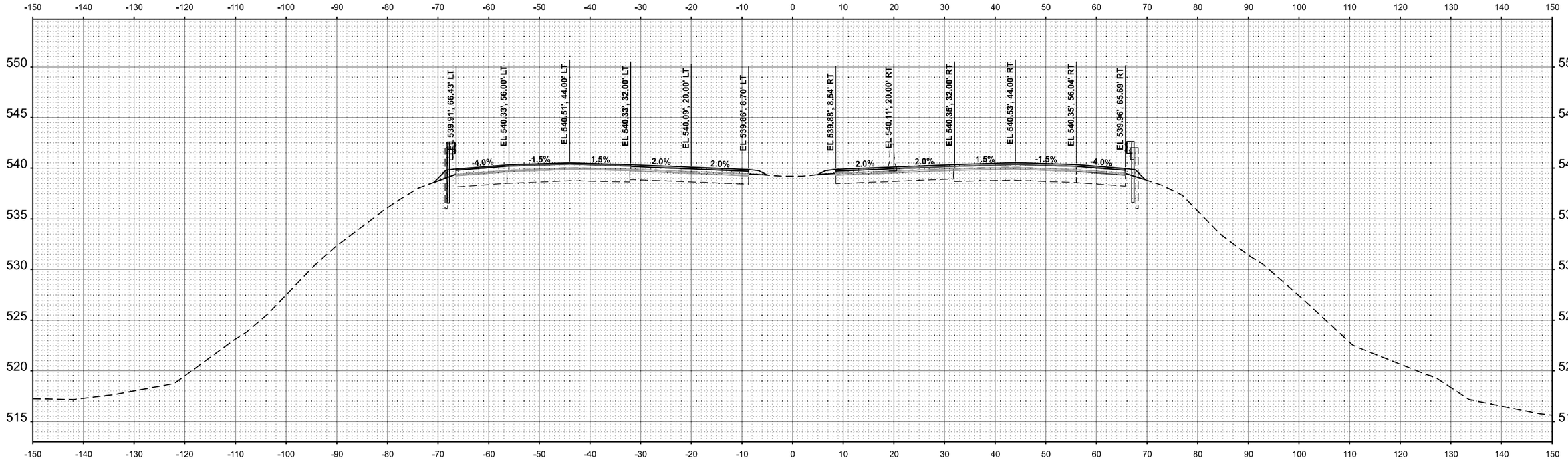

STA 792+00.00

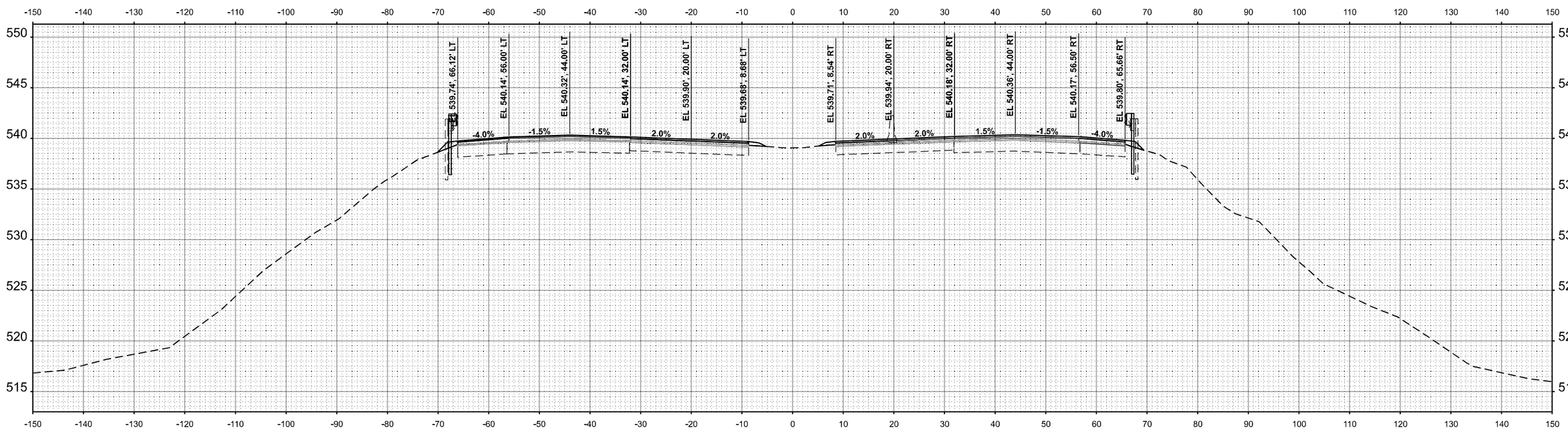

STA 791+50.00

MODEL: SHT-XS-017
FILE NAME: pw://cmengnow.bentley.com:cmenow-connect-eco@eds/Documents/IDOT21004104204410300/Sheets/72K98/D872K98sht-xs

CMT
License No. 184-000613

USER NAME = rheady	DESIGNED - MJO	REVISED -	
	DRAWN - VJR	REVISED -	
PLOT SCALE = 0.16660000 ' / in.	CHECKED - KLT	REVISED -	
PLOT DATE = 3/25/2024	DATE - MARCH 2024	REVISED -	

STATE OF ILLINOIS
DEPARTMENT OF TRANSPORTATION

FAI ROUTE 55 - INTERSTATE 55
CROSS SECTIONS

SCALE: 1"=10' | SHEET OF SHEETS | STA. TO STA.

F.A.I. RTE.	SECTION	COUNTY	TOTAL SHEETS	SHEET NO.
55	(84-2BR-1)D,BY,BP,BRR	SANGAMON	139	115

CONTRACT NO. 72K98

ILLINOIS | FED. AID PROJECT

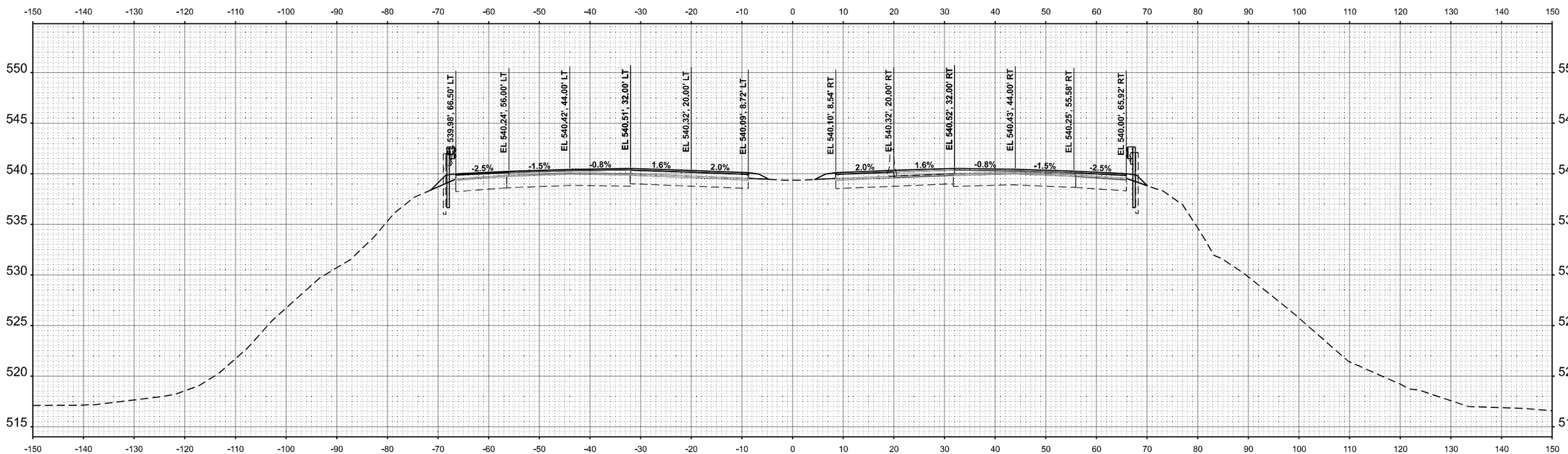

STA 792+50.00

MODEL: SHT-XS-018
FILE NAME: pw://cmtengrgw.bentley.com:cmt-connect-projects/Documents/IDOT21004103-40041030/Sheets/72K98/D972K98-sht-xs

CMT
License No. 184-000613

USER NAME = rheady	DESIGNED - MJO	REVISED -	
	DRAWN - VJR	REVISED -	
PLOT SCALE = 0.16660000 ' / in.	CHECKED - KLT	REVISED -	
PLOT DATE = 3/25/2024	DATE - MARCH 2024	REVISED -	

STATE OF ILLINOIS
DEPARTMENT OF TRANSPORTATION

FAI ROUTE 55 - INTERSTATE 55
CROSS SECTIONS

SCALE: 1"=10' | SHEET OF SHEETS | STA. TO STA.

F.A.I. RTE.	SECTION	COUNTY	TOTAL SHEETS	SHEET NO.
55	(84-2BR-1)D,BY,BP,BRR	SANGAMON	139	116
		CONTRACT NO. 72K98		
		ILLINOIS	FED. AID PROJECT	

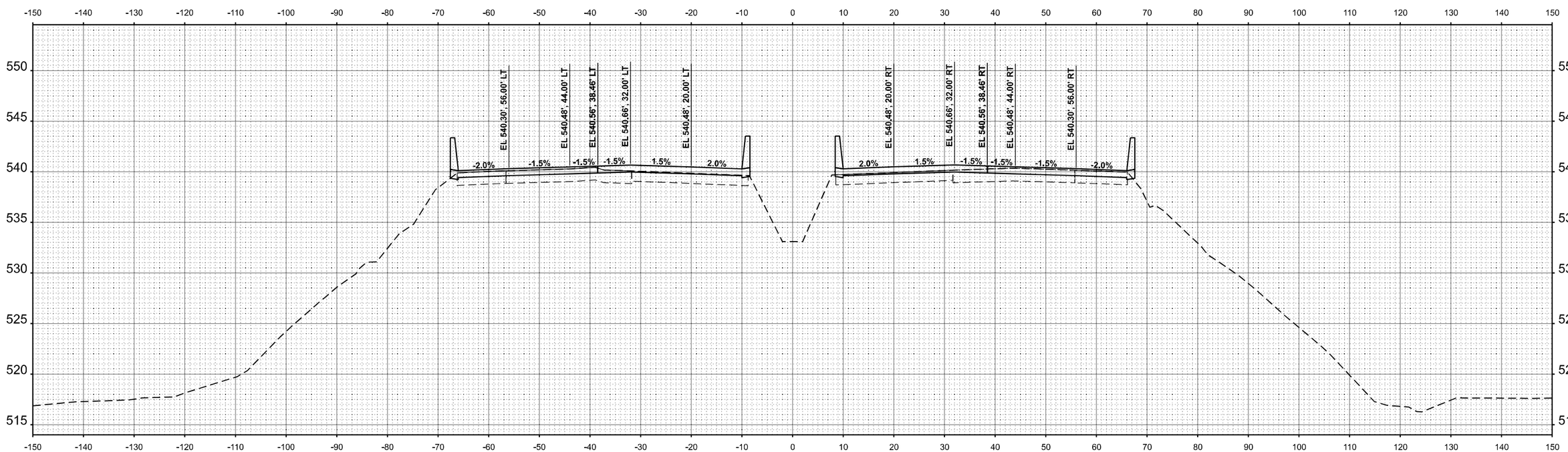

STA 793+00.00

MODEL: SHT-XS-019
FILE NAME: pw://cmengnow.bentley.com:cmenc-connect-eu-projects/Documents/IDOT 210410 40410300/Sheets/72K98/D872K98-sht-xs

CMT
License No. 184-000613 © Copyright CMT, Inc.

USER NAME = rheady	DESIGNED - MJO	REVISED -
	DRAWN - VJR	REVISED -
PLOT SCALE = 0.16660000 ' / in.	CHECKED - KLT	REVISED -
PLOT DATE = 3/25/2024	DATE - MARCH 2024	REVISED -

STATE OF ILLINOIS
DEPARTMENT OF TRANSPORTATION

FAI ROUTE 55 - INTERSTATE 55
CROSS SECTIONS

SCALE: 1"=10' | SHEET OF SHEETS | STA. TO STA.

F.A.I. RTE.	SECTION	COUNTY	TOTAL SHEETS	SHEET NO.
55	(84-2BR-1)D,BY,BP,BRR	SANGAMON	139	117

CONTRACT NO. 72K98

ILLINOIS | FED. AID PROJECT

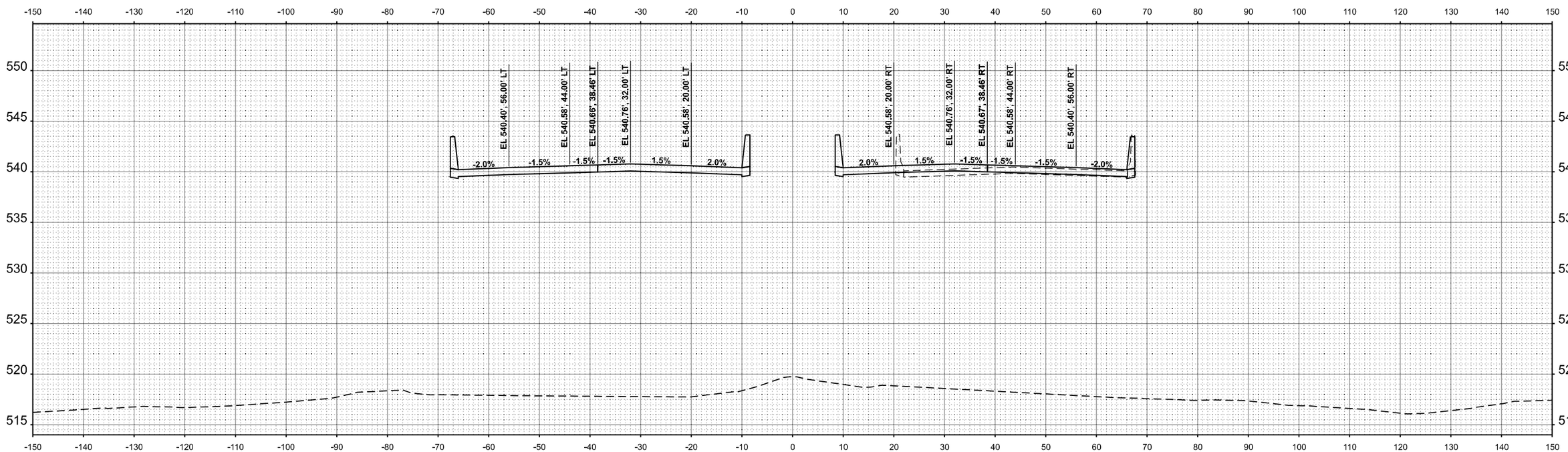

STA 793+50.00

MODEL: SHT-XS-020
FILE NAME: pw://cmengnw.bentley.com:cmengnw-connect-projects/Documents/IDOT21004104040410300/Sheets/72K98/D872K98sht-xs

CMT
License No. 184-000613

USER NAME = rheady	DESIGNED - MJO	REVISED -	
	DRAWN - VJR	REVISED -	
PLOT SCALE = 0.16660000 ' / in.	CHECKED - KLT	REVISED -	
PLOT DATE = 3/25/2024	DATE - MARCH 2024	REVISED -	

STATE OF ILLINOIS
DEPARTMENT OF TRANSPORTATION

FAI ROUTE 55 - INTERSTATE 55
CROSS SECTIONS

SCALE: 1"=10' | SHEET OF SHEETS | STA. TO STA.

F.A.I. RTE.	SECTION	COUNTY	TOTAL SHEETS	SHEET NO.
55	(84-2BR-1)D,BY,BP,BRR	SANGAMON	139	118

CONTRACT NO. 72K98

ILLINOIS | FED. AID PROJECT

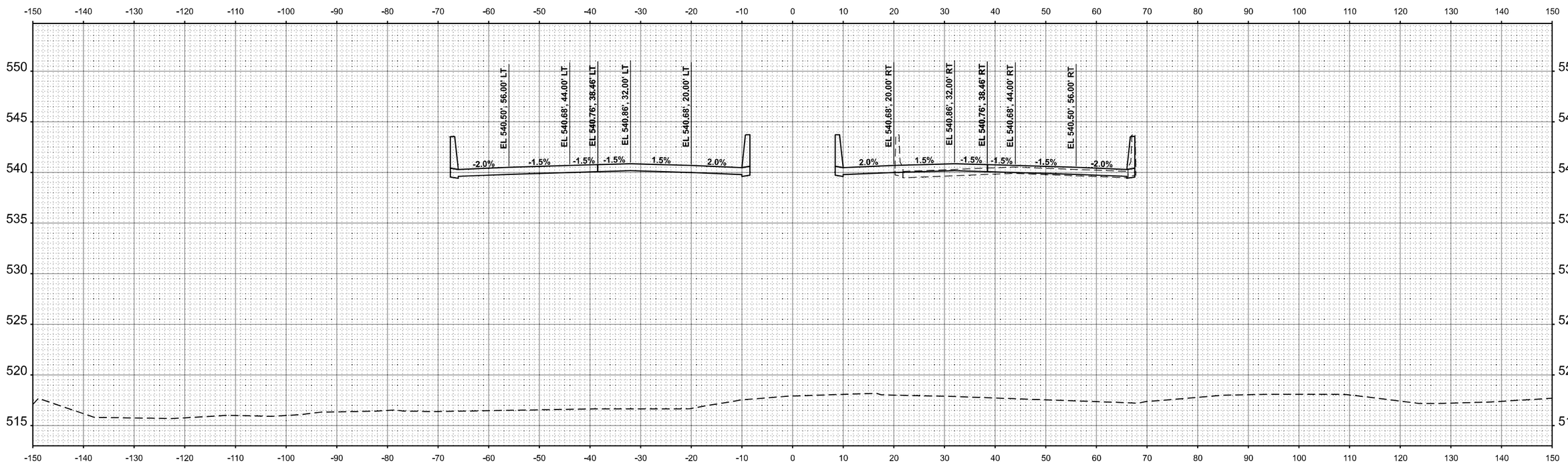

STA 794+00.00

MODEL: SHT-XS-021
FILE NAME: pw://cmengnow.bentley.com:cmengnow-connect-eu-projects/Documents/IDOT210041034204410300/Sheets/72K98/D872K98sht-xs

CMT
License No. 184-000613

USER NAME = rheady	DESIGNED - MJO	REVISED -
	DRAWN - VJR	REVISED -
PLOT SCALE = 0.16660000 ' / in.	CHECKED - KLT	REVISED -
PLOT DATE = 3/25/2024	DATE - MARCH 2024	REVISED -

STATE OF ILLINOIS
DEPARTMENT OF TRANSPORTATION

FAI ROUTE 55 - INTERSTATE 55
CROSS SECTIONS

SCALE: 1"=10' | SHEET OF SHEETS | STA. TO STA.

F.A.I. RTE.	SECTION	COUNTY	TOTAL SHEETS	SHEET NO.
55	(84-2BR-1)D,BY,BP,BRR	SANGAMON	139	119

CONTRACT NO. 72K98

ILLINOIS | FED. AID PROJECT

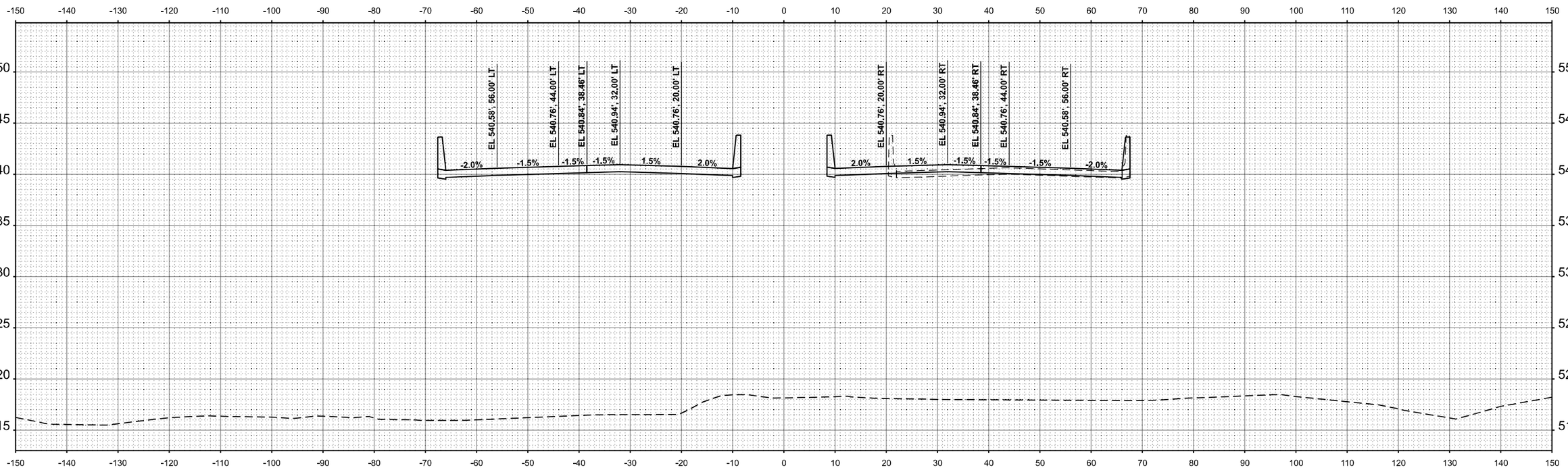

STA 794+50.00

MODEL: SHT-XS-022
FILE NAME: pw://cmengnow.bentley.com:cmenc-connect-eco/projects/Documents/IDOT/21004/10400410300/Sheets/72K98/D872K98sht-xs

CMT
License No. 184-000613 © Copyright CMT, Inc.

USER NAME = rheady	DESIGNED - MJO	REVISED -
	DRAWN - VJR	REVISED -
PLOT SCALE = 0.16660000 ' / in.	CHECKED - KLT	REVISED -
PLOT DATE = 3/25/2024	DATE - MARCH 2024	REVISED -

STATE OF ILLINOIS
DEPARTMENT OF TRANSPORTATION

FAI ROUTE 55 - INTERSTATE 55
CROSS SECTIONS

SCALE: 1"=10' | SHEET OF SHEETS | STA. TO STA.

F.A.I. RTE.	SECTION	COUNTY	TOTAL SHEETS	SHEET NO.
55	(84-2BR-1)D,BY,BP,BRR	SANGAMON	120	120

CONTRACT NO. 72K98

ILLINOIS | FED. AID PROJECT

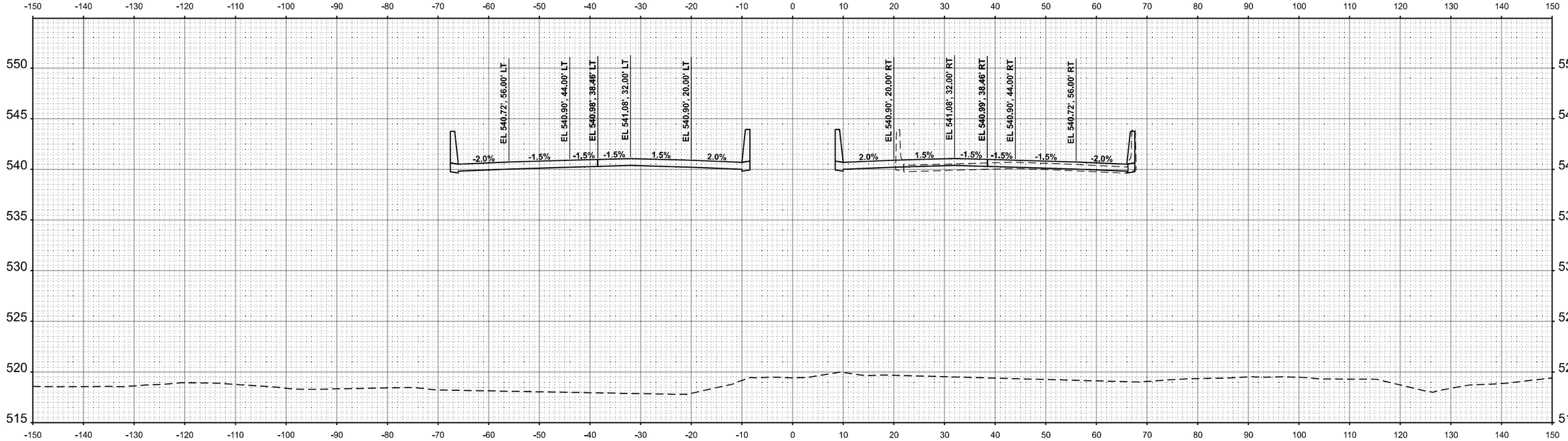

STA 795+50.00

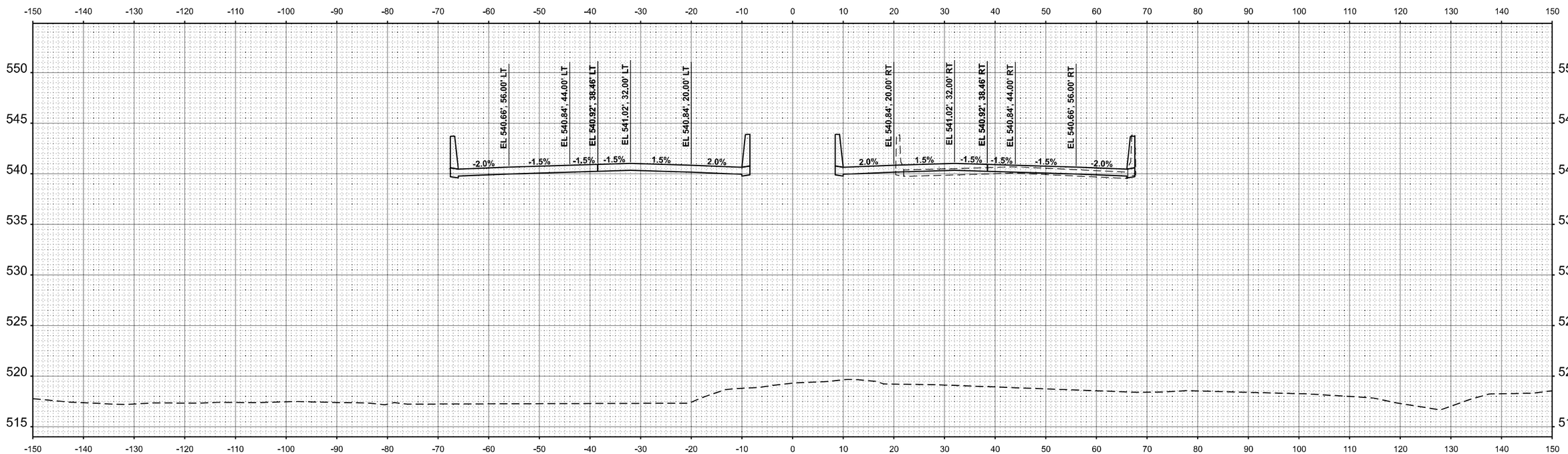

STA 795+00.00

MODEL: SHT-XS-023
FILE NAME: pw://cmtengrgpw.bentley.com:cmt-connect-projects/Documents/IDOT/21004103-40041030/Sheets/72K98/D972K98-sht-xs

CMT
License No. 184-000613

USER NAME = rheady	DESIGNED - MJO	REVISED -	
	DRAWN - VJR	REVISED -	
PLOT SCALE = 0.16660000 ' / in.	CHECKED - KLT	REVISED -	
PLOT DATE = 3/25/2024	DATE - MARCH 2024	REVISED -	

STATE OF ILLINOIS
DEPARTMENT OF TRANSPORTATION

FAI ROUTE 55 - INTERSTATE 55
CROSS SECTIONS

SCALE: 1"=10' | SHEET OF SHEETS | STA. TO STA.

F.A.I. RTE.	SECTION	COUNTY	TOTAL SHEETS	SHEET NO.
55	(84-2BR-1)D,BY,BP,BRR	SANGAMON	139	121
		CONTRACT NO. 72K98		
		ILLINOIS	FED. AID PROJECT	

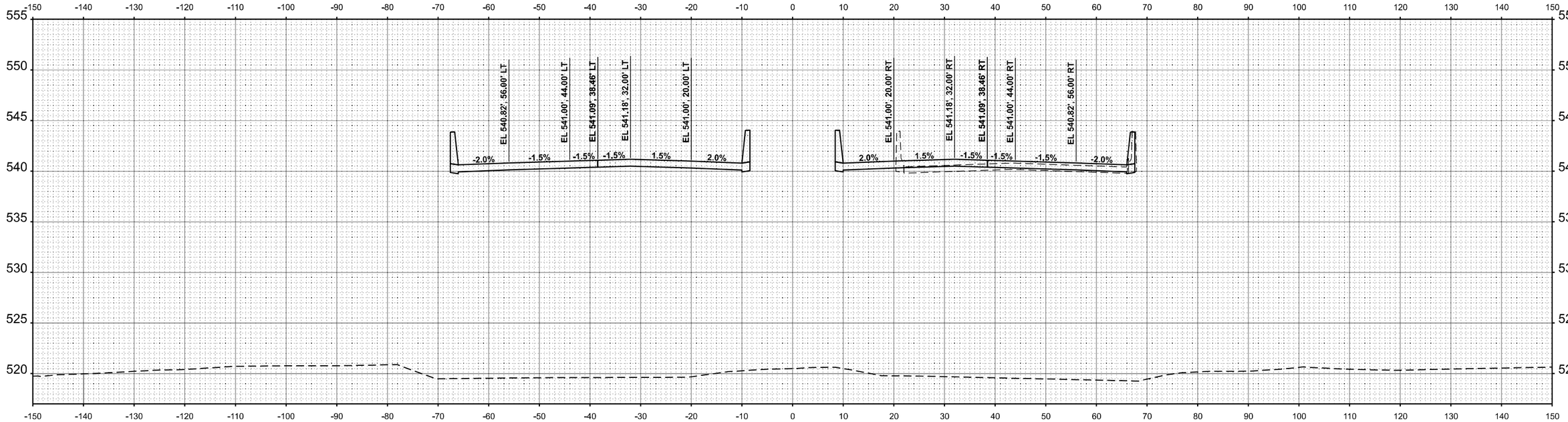

STA 796+50.00

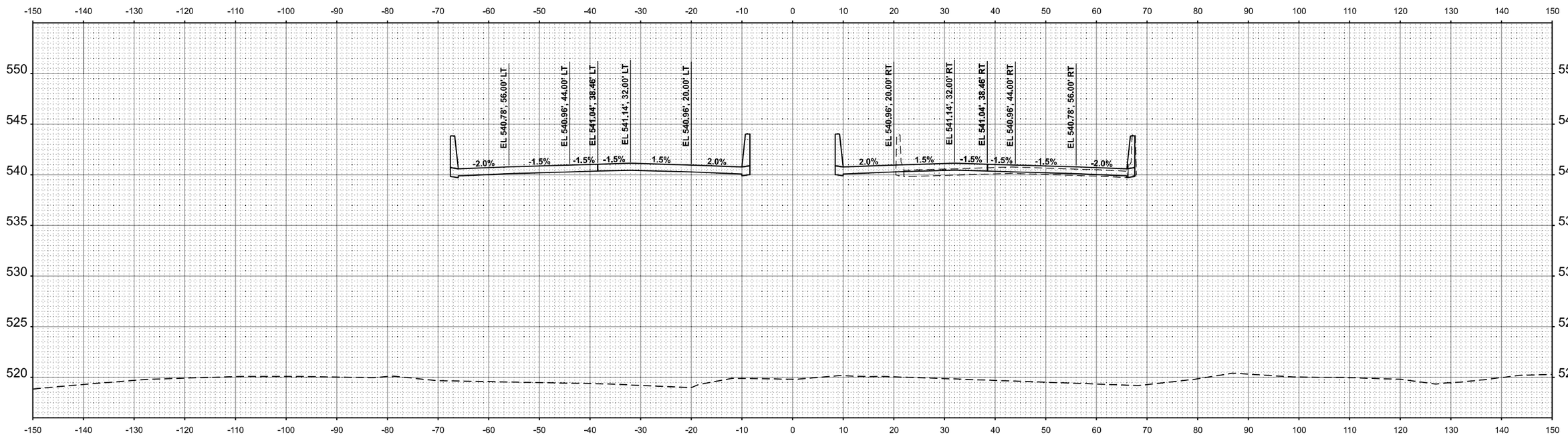

STA 796+00.00

MODEL: SHT-XS-024
FILE NAME: pw://cmtengrgw.bentley.com:cmtengrgw-connect-eco-projects/Documents/DOT21004 10420041030/Sheets/72K98/D872K98sht-xs

CMT
License No. 184-000613

USER NAME = rheady	DESIGNED - MJO	REVISED -	
	DRAWN - VJR	REVISED -	
PLOT SCALE = 0.16660000 ' / in.	CHECKED - KLT	REVISED -	
PLOT DATE = 3/25/2024	DATE - MARCH 2024	REVISED -	

STATE OF ILLINOIS
DEPARTMENT OF TRANSPORTATION

FAI ROUTE 55 - INTERSTATE 55
CROSS SECTIONS

SCALE: 1"=10' | SHEET OF SHEETS | STA. TO STA.

F.A.I. RTE.	SECTION	COUNTY	TOTAL SHEETS	SHEET NO.
55	(84-2BR-1)D,BY,BP,BRR	SANGAMON	139	122

CONTRACT NO. 72K98

ILLINOIS | FED. AID PROJECT

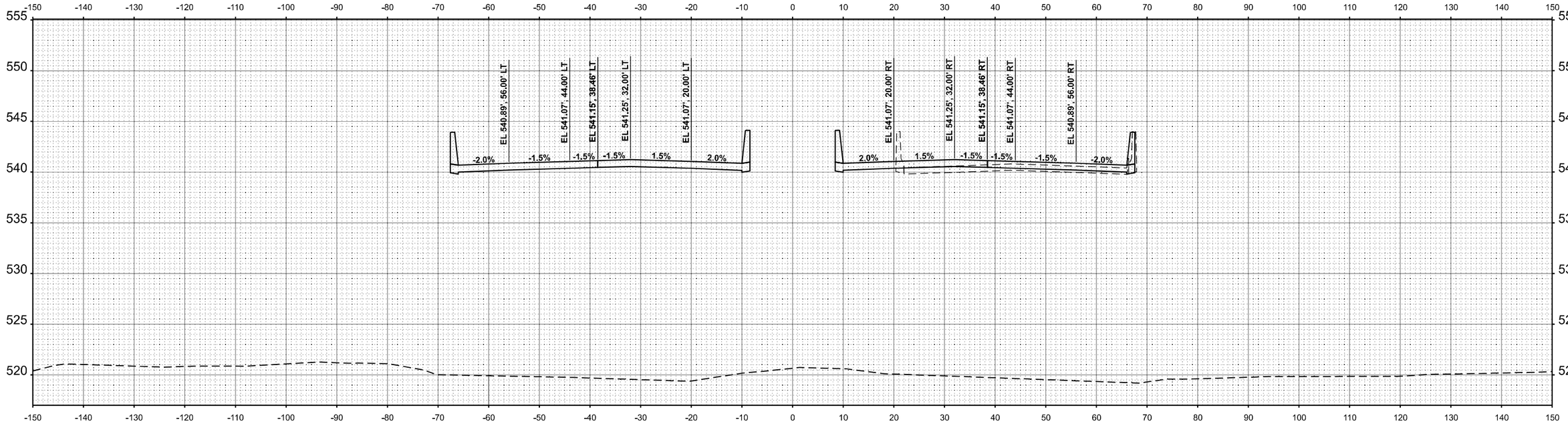

STA 797+50.00

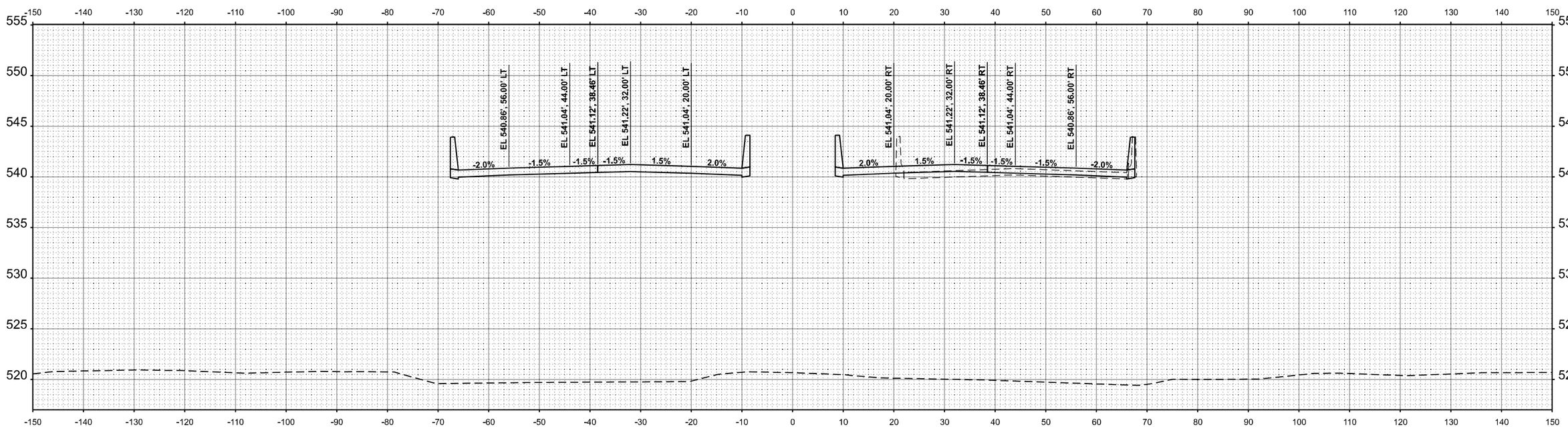

STA 797+00.00

MODEL: SHT-XS-025
FILE NAME: pw://cmengnow.bentley.com:cmengnow-connect-eu-projects/Documents/IDOT 210410 40410300/Sheets/72K98/D972K98-sht-xs

CMT
License No. 184-000613 © Copyright CMT, Inc.

USER NAME = rheady	DESIGNED - MJO	REVISED -	
	DRAWN - VJR	REVISED -	
PLOT SCALE = 0.16660000 ' / in.	CHECKED - KLT	REVISED -	
PLOT DATE = 3/25/2024	DATE - MARCH 2024	REVISED -	

STATE OF ILLINOIS
DEPARTMENT OF TRANSPORTATION

FAI ROUTE 55 - INTERSTATE 55
CROSS SECTIONS

SCALE: 1"=10' | SHEET OF SHEETS | STA. TO STA.

F.A.I. RTE.	SECTION	COUNTY	TOTAL SHEETS	SHEET NO.
55	(84-2BR-1)D,BY,BP,BRR	SANGAMON	129	123
		CONTRACT NO. 72K98		
		ILLINOIS	FED. AID PROJECT	

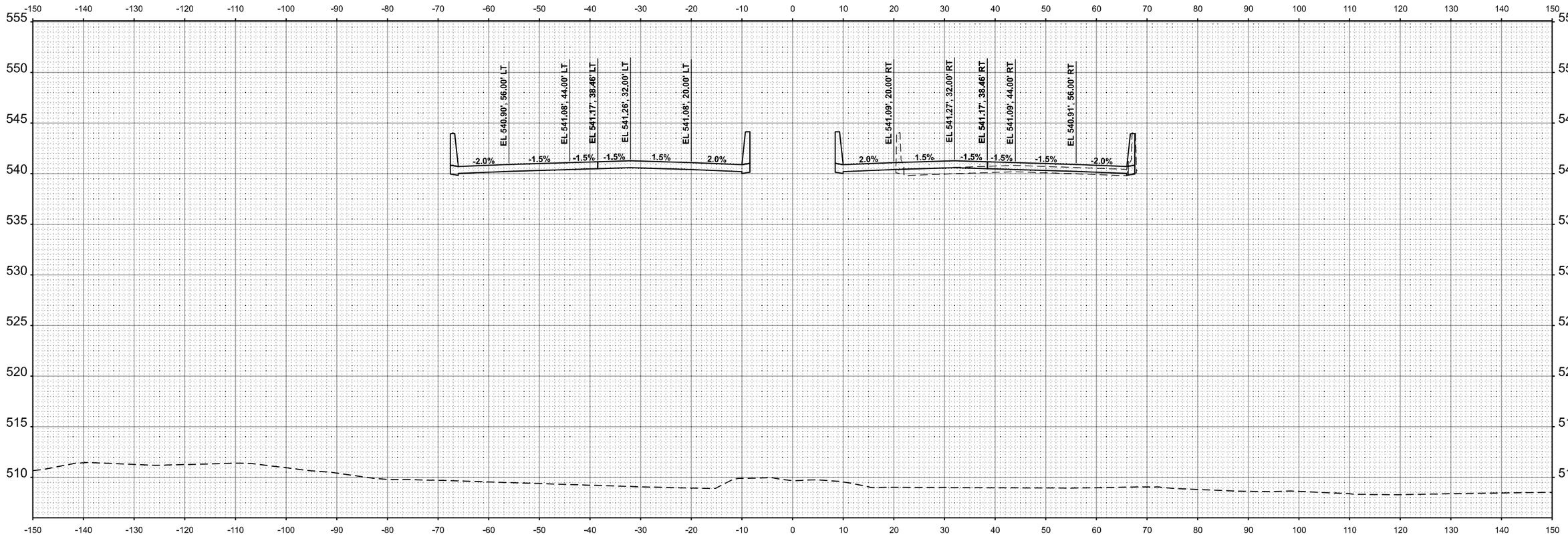

STA 798+00.00

MODEL: SHT-xS-026
FILE NAME: pw://cmtengpw.bentley.com:cmtprojects/Documents/IDOT/21004105-04410300/Sheets/72K98/D972K98sht.dwg

CMT
License No. 184-000613

USER NAME = rheady	DESIGNED - MJO	REVISED -	
	DRAWN - VJR	REVISED -	
PLOT SCALE = 0.16660000 ' / in.	CHECKED - KLT	REVISED -	
PLOT DATE = 3/25/2024	DATE - MARCH 2024	REVISED -	

STATE OF ILLINOIS
DEPARTMENT OF TRANSPORTATION

FAI ROUTE 55 - INTERSTATE 55
CROSS SECTIONS

SCALE: 1"=10' | SHEET OF SHEETS | STA. TO STA.

F.A.I. RTE.	SECTION	COUNTY	TOTAL SHEETS	SHEET NO.
55	(84-2BR-1)D,BY,BP,BRR	SANGAMON	139	124
		CONTRACT NO. 72K98		
		ILLINOIS FED. AID PROJECT		

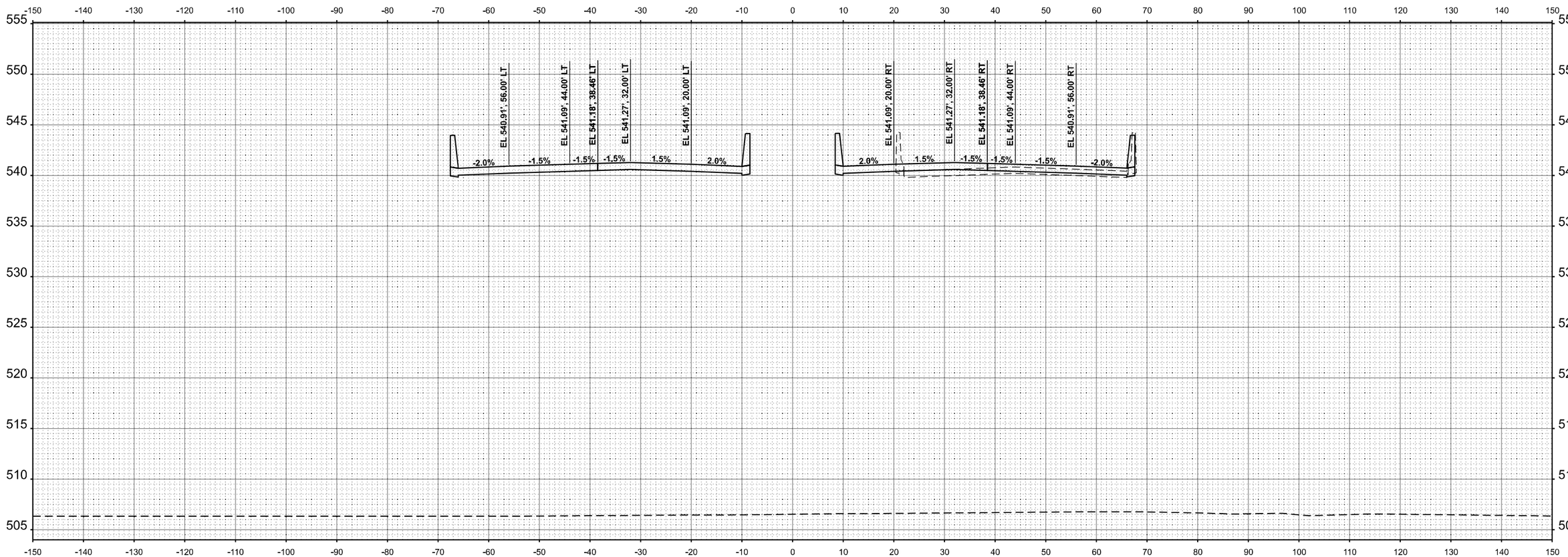

STA 798+50.00

MODEL: SHT-XS-027
FILE NAME: pw://cmtengrpw.bentley.com:cmtconnect-eprojects/Documents/IDOT/21004/10400/10300/Sheets/72K98/D072K98sht1xs

CMT
License No. 184-000613 Copyright CMT, Inc.

USER NAME = rheady	DESIGNED - MJO	REVISED -	
	DRAWN - VJR	REVISED -	
PLOT SCALE = 0.16660000 ' / in.	CHECKED - KLT	REVISED -	
PLOT DATE = 3/25/2024	DATE - MARCH 2024	REVISED -	

STATE OF ILLINOIS
DEPARTMENT OF TRANSPORTATION

FAI ROUTE 55 - INTERSTATE 55
CROSS SECTIONS

SCALE: 1"=10' | SHEET OF SHEETS | STA. TO STA.

F.A.I. RTE.	SECTION	COUNTY	TOTAL SHEETS	SHEET NO.
55	(84-2BR-1)D,BY,BP,BRR	SANGAMON	139	125
		CONTRACT NO. 72K98		
		ILLINOIS	FED. AID PROJECT	

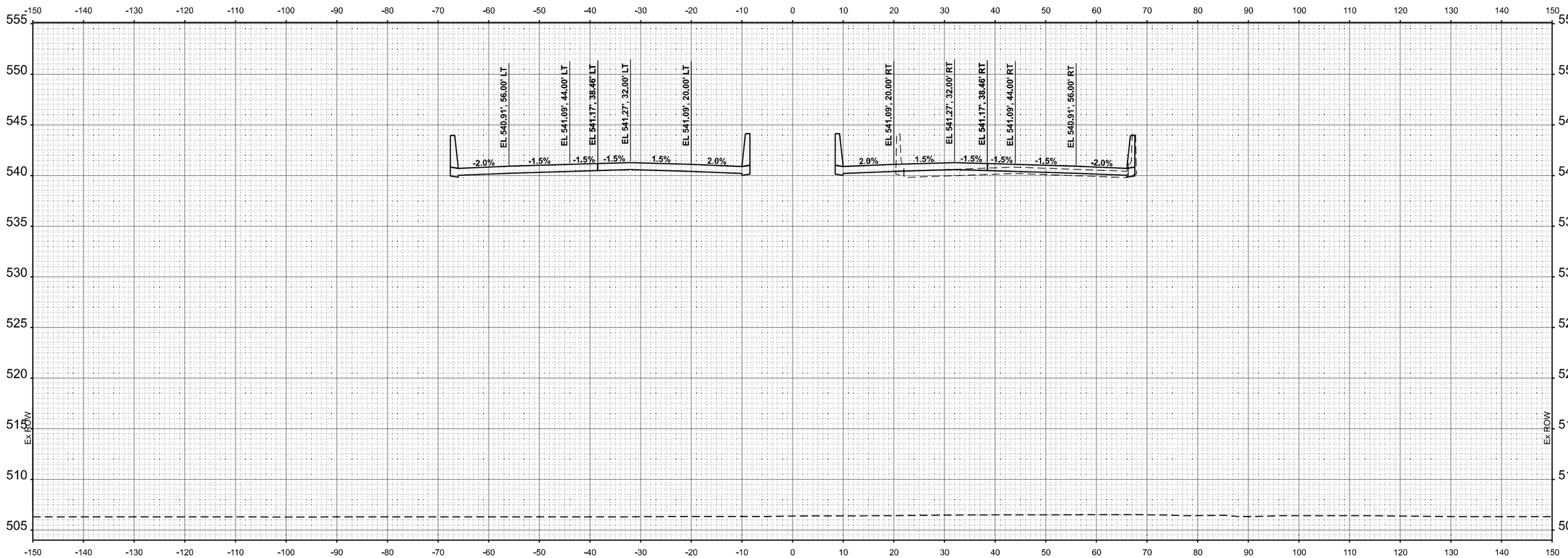

STA 799+00.00

MODEL: SHT-XS-028
FILE NAME: pw://smeinginew.bentley.com:connect-connect-projects/Documents/IDOT/21004100410300/Sheets/72K98/D672K98-sht-xs

CMT
License No. 184-000613
Copyright CMT, Inc.

USER NAME = rheady	DESIGNED - MJO	REVISED -	
	DRAWN - VJR	REVISED -	
PLOT SCALE = 0.16660000 ' / in.	CHECKED - KLT	REVISED -	
PLOT DATE = 3/25/2024	DATE - MARCH 2024	REVISED -	

STATE OF ILLINOIS
DEPARTMENT OF TRANSPORTATION

FAI ROUTE 55 - INTERSTATE 55
CROSS SECTIONS

SCALE: 1"=10' | SHEET OF SHEETS | STA. TO STA.

F.A.I. RTE.	SECTION	COUNTY	TOTAL SHEETS	SHEET NO.
55	(84-2BR-1)D,BY,BP,BRR	SANGAMON	139	126

CONTRACT NO. 72K98

ILLINOIS | FED. AID PROJECT

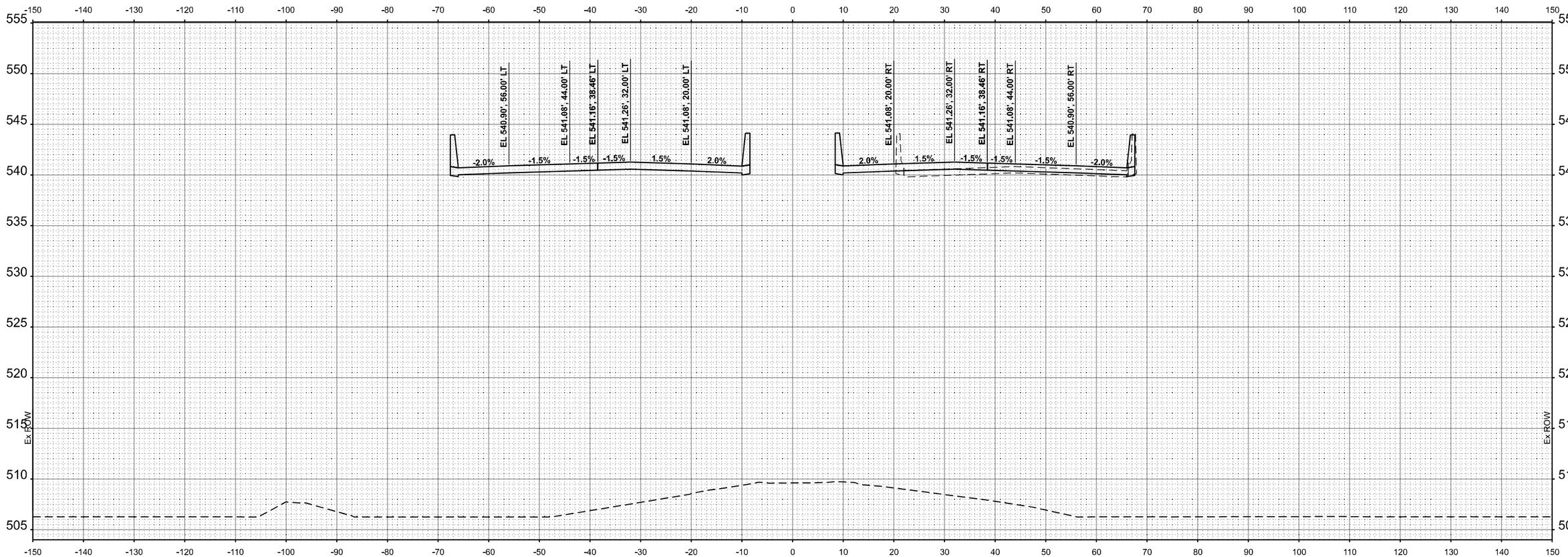

STA 799+50.00

MODEL: SHT-XS-029
FILE NAME: pw://mwrdgc-pw.bentley.com:pw-connect-eu-global/Documents/IDOT/210041/04A0/41030/Sheets/72K98/D672K98sht001.dgn

CMT
License No. 184-000613 Copyright CMT, Inc.

USER NAME = rheady	DESIGNED - MJO	REVISED -	
	DRAWN - VJR	REVISED -	
PLOT SCALE = 0.16660000 ' / in.	CHECKED - KLT	REVISED -	
PLOT DATE = 3/25/2024	DATE - MARCH 2024	REVISED -	

STATE OF ILLINOIS
DEPARTMENT OF TRANSPORTATION

FAI ROUTE 55 - INTERSTATE 55
CROSS SECTIONS

SCALE: 1"=10' | SHEET OF SHEETS | STA. TO STA.

F.A.I. RTE.	SECTION	COUNTY	TOTAL SHEETS	SHEET NO.
55	(84-2BR-1)D,BY,BP,BRR	SANGAMON	139	127
		CONTRACT NO. 72K98		
		ILLINOIS	FED. AID PROJECT	

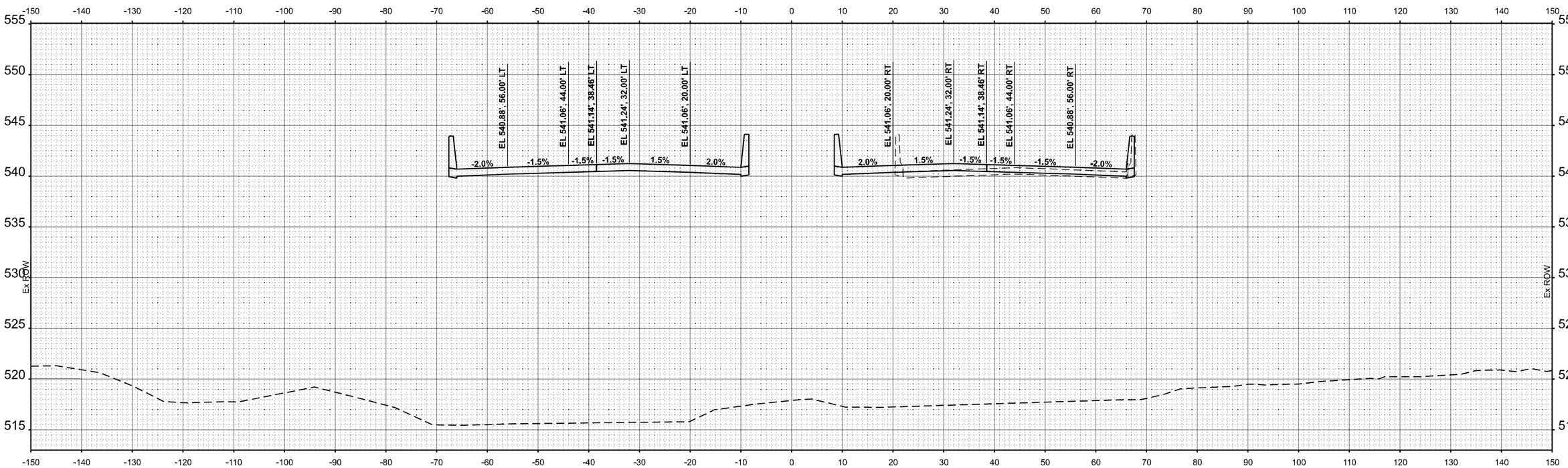

STA 800+00.00

MODEL: SHT-XS-030
FILE NAME: pw://cmtengineering.bentley.com:connected-projects/Documents/IDOT/21004110340/41030/Sheets/72K98/D872K98sht-xs

CMT
License No. 184-000613
Copyright CMT, Inc.

USER NAME = rheady	DESIGNED - MJO	REVISED -	
	DRAWN - VJR	REVISED -	
PLOT SCALE = 0.16660000 ' / in.	CHECKED - KLT	REVISED -	
PLOT DATE = 3/25/2024	DATE - MARCH 2024	REVISED -	

STATE OF ILLINOIS
DEPARTMENT OF TRANSPORTATION

FAI ROUTE 55 - INTERSTATE 55
CROSS SECTIONS

SCALE: 1"=10' | SHEET OF SHEETS | STA. TO STA.

F.A.I. RTE.	SECTION	COUNTY	TOTAL SHEETS	SHEET NO.
55	(84-2BR-1)D,BY,BP,BRR	SANGAMON	139	128
		CONTRACT NO. 72K98		
		ILLINOIS	FED. AID PROJECT	

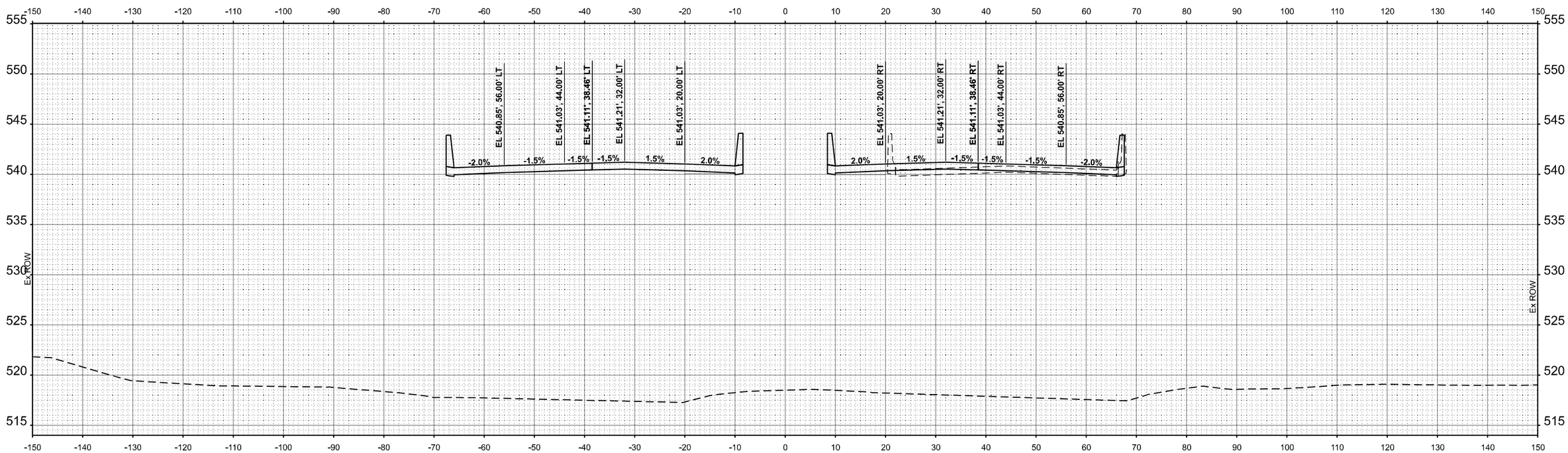

STA 800+50.00

MODEL: SHT-XS-031
FILE NAME: pw://cmtengpw.bentley.com:cmtengpw-projects/Documents/IDOT/210041/0410300/Sheets/72K98/D972K98-sht001.dwg

CMT
License No. 184-000613
Copyright CMT, Inc.

USER NAME = rheady	DESIGNED - MJO	REVISED -	
	DRAWN - VJR	REVISED -	
PLOT SCALE = 0.16660000 ' / in.	CHECKED - KLT	REVISED -	
PLOT DATE = 3/25/2024	DATE - MARCH 2024	REVISED -	

STATE OF ILLINOIS
DEPARTMENT OF TRANSPORTATION

FAI ROUTE 55 - INTERSTATE 55
CROSS SECTIONS

SCALE: 1"=10' | SHEET OF SHEETS | STA. TO STA.

F.A.I. RTE.	SECTION	COUNTY	TOTAL SHEETS	SHEET NO.
55	(84-2BR-1)D,BY,BP,BRR	SANGAMON	139	129

CONTRACT NO. 72K98

ILLINOIS | FED. AID PROJECT

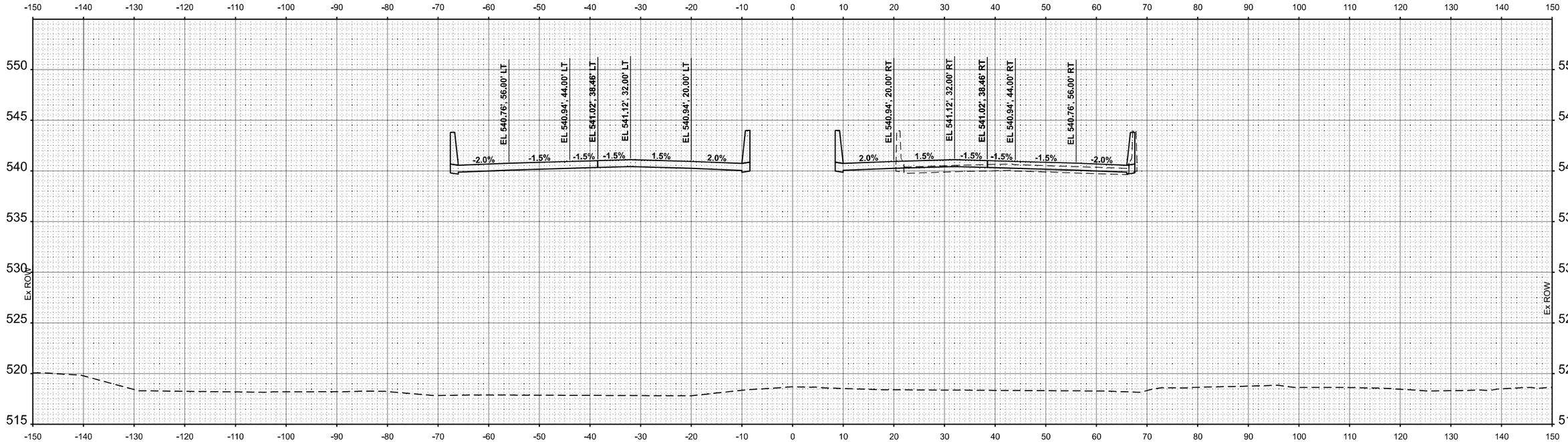

STA 801+50.00

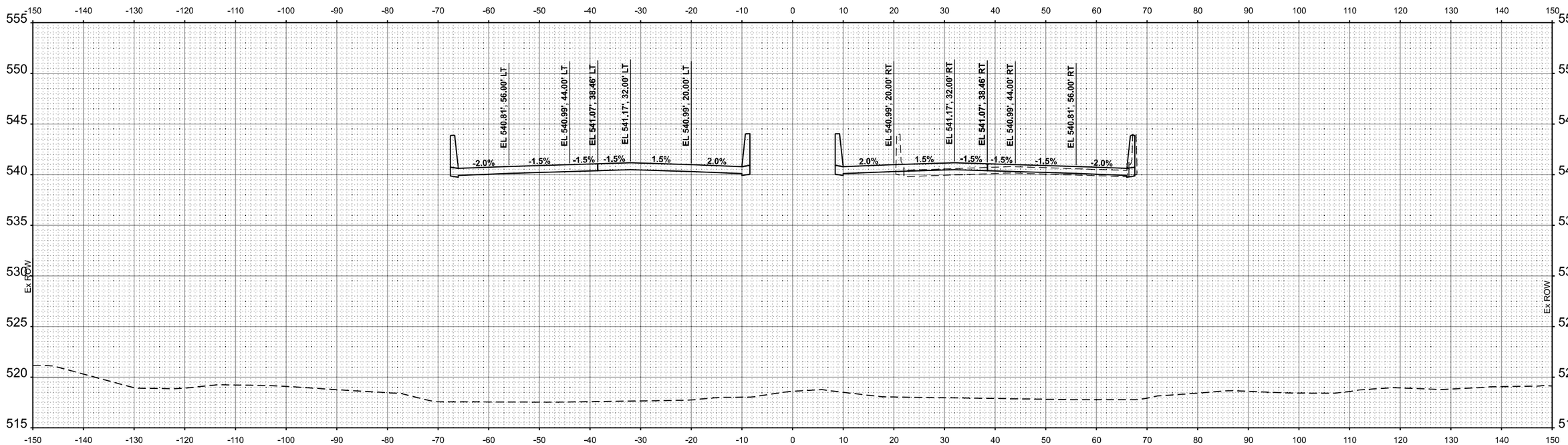

STA 801+00.00

MODEL: SHT-XS-032
FILE NAME: pw://cmengnow.bentley.com:cmenow-connect-eu-projects/Documents/IDOT 210410 540410300/Sheets/72K98/D872K98sht001.dgn

CMT
License No. 184-000613

USER NAME = rheady	DESIGNED - MJO	REVISED -	
	DRAWN - VJR	REVISED -	
PLOT SCALE = 0.16660000 ' / in.	CHECKED - KLT	REVISED -	
PLOT DATE = 3/25/2024	DATE - MARCH 2024	REVISED -	

STATE OF ILLINOIS
DEPARTMENT OF TRANSPORTATION

FAI ROUTE 55 - INTERSTATE 55
CROSS SECTIONS

SCALE: 1"=10' | SHEET OF SHEETS | STA. TO STA.

F.A.I. RTE.	SECTION	COUNTY	TOTAL SHEETS	SHEET NO.
55	(84-2BR-1)D,BY,BP,BRR	SANGAMON	139	130

CONTRACT NO. 72K98

ILLINOIS | FED. AID PROJECT

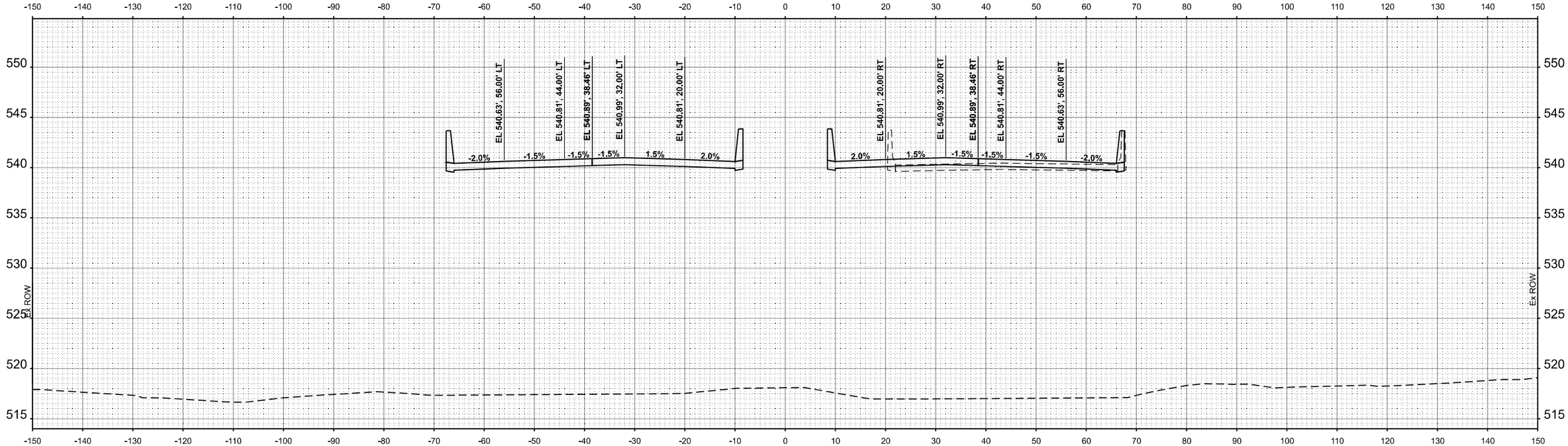

STA 802+50.00

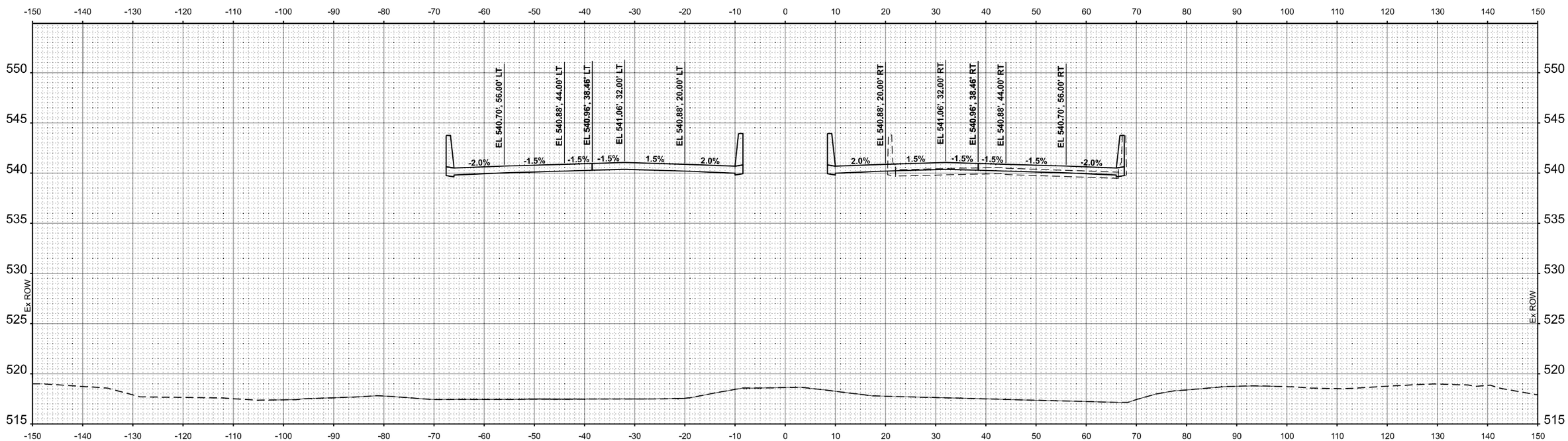

STA 802+00.00

MODEL: SHT-XS-033
FILE NAME: pw://cmengnow.bentley.com:cmeconnect-eu-projects/Documents/IDOT 210410 40410300/Sheets/72K98/D872K98sht001.dgn

CMT
License No. 184-000613

USER NAME = rheady	DESIGNED - MJO	REVISED -
	DRAWN - VJR	REVISED -
PLOT SCALE = 0.16660000 ' / in.	CHECKED - KLT	REVISED -
PLOT DATE = 3/25/2024	DATE - MARCH 2024	REVISED -

STATE OF ILLINOIS
DEPARTMENT OF TRANSPORTATION

FAI ROUTE 55 - INTERSTATE 55
CROSS SECTIONS

SCALE: 1"=10' | SHEET OF SHEETS | STA. TO STA.

F.A.I. RTE.	SECTION	COUNTY	TOTAL SHEETS	SHEET NO.
55	(84-2BR-1)D,BY,BP,BRR	SANGAMON	139	131

CONTRACT NO. 72K98

ILLINOIS | FED. AID PROJECT

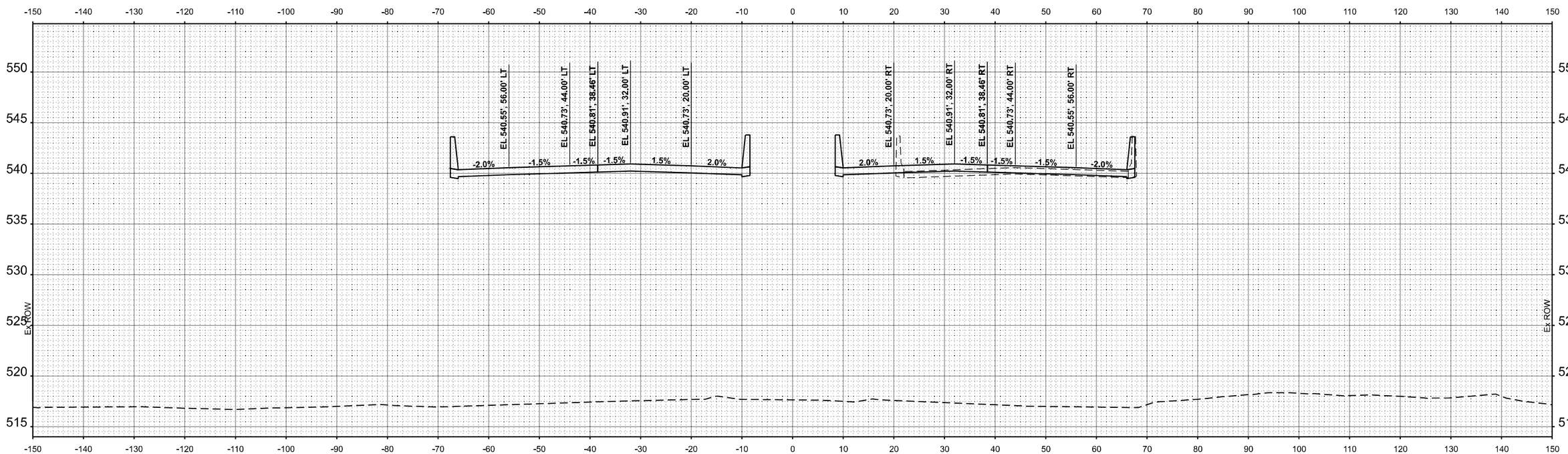

STA 803+00.00

MODEL: SHT-XS-034
FILE NAME: pw://cmeng-pw.bentley.com:cmeng-connect-projects/Documents/IDOT/21004/00410300/Sheets/72K98/D672K98-sht-xs

CMT
License No. 184-000613

USER NAME = rheady	DESIGNED - MJO	REVISED -
	DRAWN - VJR	REVISED -
PLOT SCALE = 0.16660000 ' / in.	CHECKED - KLT	REVISED -
PLOT DATE = 3/25/2024	DATE - MARCH 2024	REVISED -

STATE OF ILLINOIS
DEPARTMENT OF TRANSPORTATION

FAI ROUTE 55 - INTERSTATE 55
CROSS SECTIONS

SCALE: 1"=10' | SHEET OF SHEETS | STA. TO STA.

F.A.I. RTE.	SECTION	COUNTY	TOTAL SHEETS	SHEET NO.
55	(84-2BR-1)D,BY,BP,BRR	SANGAMON	139	132

CONTRACT NO. 72K98

ILLINOIS | FED. AID PROJECT

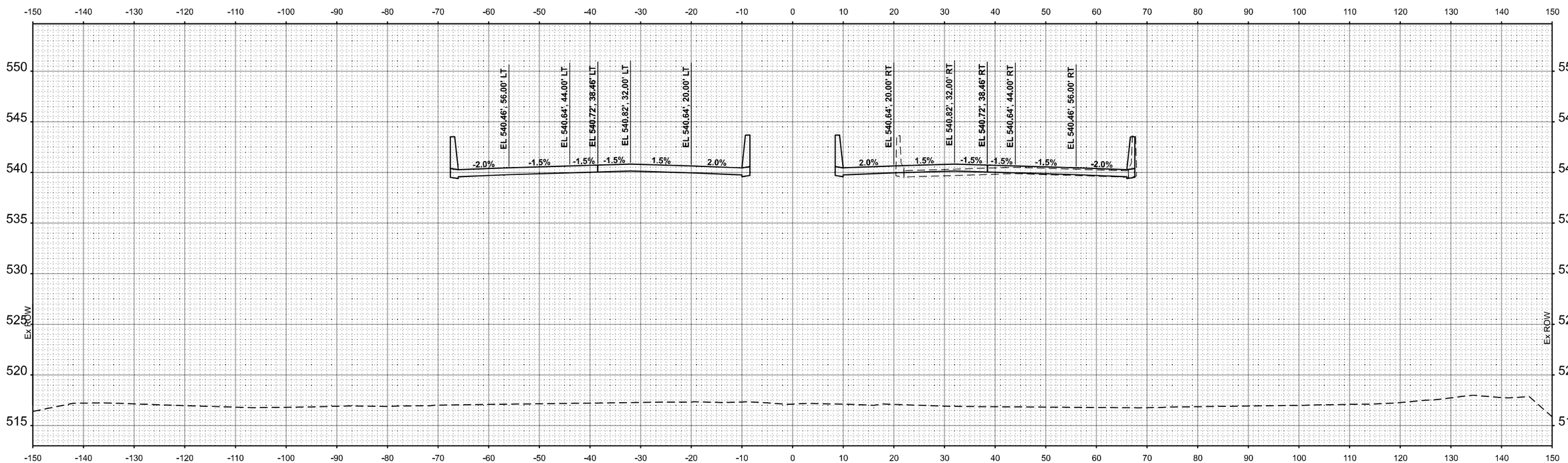

STA 803+50.00

MODEL: SHT-XS-035
FILE NAME: pw://cmtengrgw.bentley.com:cmtw-connect-eco@pects/Documents/DOT21004 10400410300\Sheets\72K98\DB72K98sht-xs

CMT
License No. 184-000613 © Copyright CMT, Inc.

USER NAME = rheady	DESIGNED - MJO	REVISED -	
	DRAWN - VJR	REVISED -	
PLOT SCALE = 0.16660000 ' / in.	CHECKED - KLT	REVISED -	
PLOT DATE = 3/25/2024	DATE - MARCH 2024	REVISED -	

STATE OF ILLINOIS
DEPARTMENT OF TRANSPORTATION

FAI ROUTE 55 - INTERSTATE 55
CROSS SECTIONS

SCALE: 1"=10' | SHEET OF SHEETS | STA. TO STA.

F.A.I. RTE.	SECTION	COUNTY	TOTAL SHEETS	SHEET NO.
55	(84-2BR-1)D,BY,BP,BRR	SANGAMON	139	133

CONTRACT NO. 72K98

ILLINOIS | FED. AID PROJECT

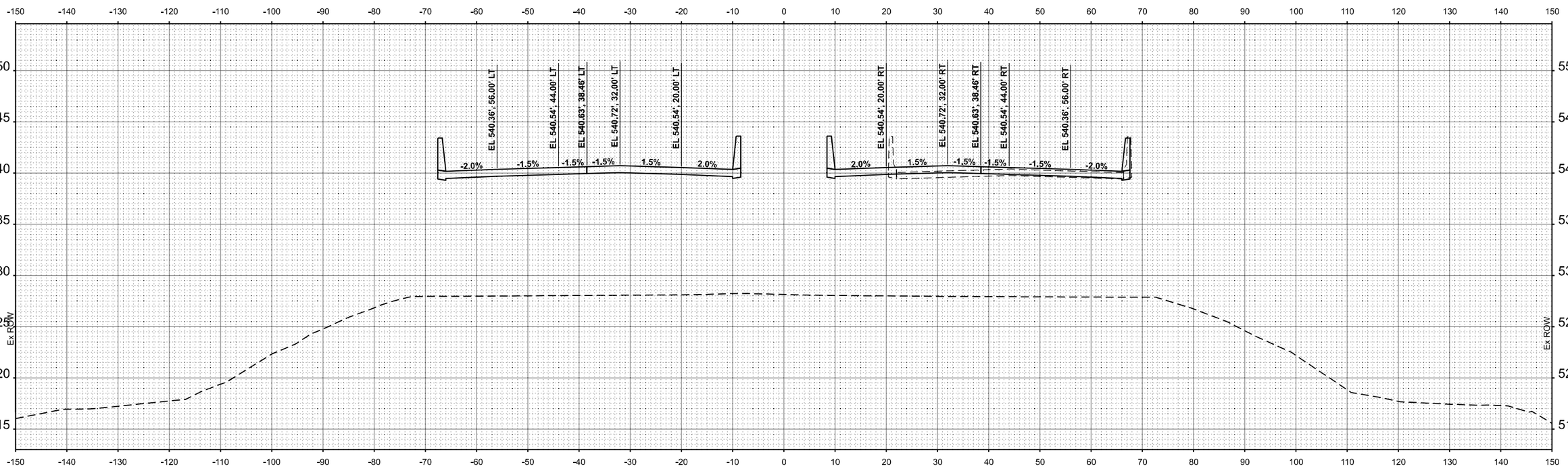

STA 804+00.00

MODEL: SHT-XS-036
FILE NAME: pw://cmtengrgw.bentley.com:cmtengrgw-connect-eco@projects/Documents/DOT21004105400410300/Sheets/72K98/D872K98sht-xs

CMT
License No. 184-000613 © Copyright CMT, Inc.

USER NAME = rheady	DESIGNED - MJO	REVISED -	
	DRAWN - VJR	REVISED -	
PLOT SCALE = 0.16660000 ' / in.	CHECKED - KLT	REVISED -	
PLOT DATE = 3/25/2024	DATE - MARCH 2024	REVISED -	

STATE OF ILLINOIS
DEPARTMENT OF TRANSPORTATION

FAI ROUTE 55 - INTERSTATE 55
CROSS SECTIONS

SCALE: 1"=10' | SHEET OF SHEETS | STA. TO STA.

F.A.I. RTE.	SECTION	COUNTY	TOTAL SHEETS	SHEET NO.
55	(84-2BR-1)D,BY,BP,BRR	SANGAMON	139	134

CONTRACT NO. 72K98

ILLINOIS | FED. AID PROJECT

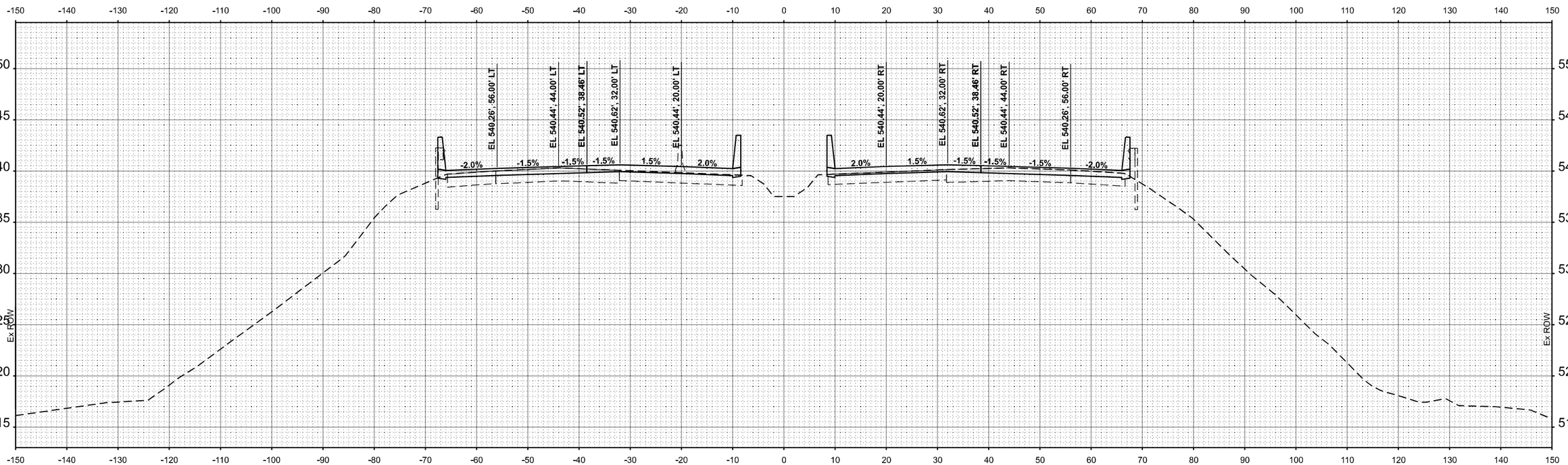

STA 804+50.00

MODEL: SHT-XS-037
FILE NAME: pw://cmengnow.bentley.com:cmenow-connect-eco/projects/Documents/IDOT/210041/0400410300/Sheets/72K98/D872K98sht-xs

CMT
License No. 184-000613

USER NAME = rheady	DESIGNED - MJO	REVISED -	
	DRAWN - VJR	REVISED -	
PLOT SCALE = 0.16660000 ' / in.	CHECKED - KLT	REVISED -	
PLOT DATE = 3/25/2024	DATE - MARCH 2024	REVISED -	

STATE OF ILLINOIS
DEPARTMENT OF TRANSPORTATION

FAI ROUTE 55 - INTERSTATE 55
CROSS SECTIONS

SCALE: 1"=10' | SHEET OF SHEETS | STA. TO STA.

F.A.I. RTE.	SECTION	COUNTY	TOTAL SHEETS	SHEET NO.
55	(84-2BR-1)D,BY,BP,BRR	SANGAMON	139	135

CONTRACT NO. 72K98

ILLINOIS | FED. AID PROJECT

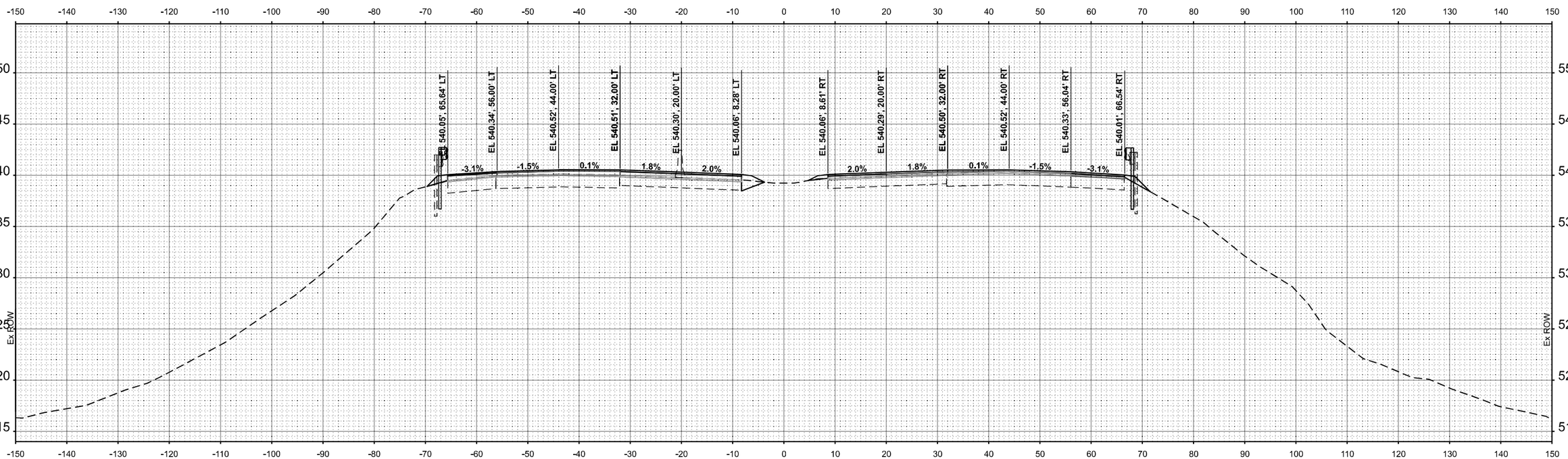

STA 805+00.00

MODEL: SHT-XS-038
FILE NAME: pw://cmeng-pw.bentley.com:cmec-connect-projects/Documents/IDOT/21004/00410300/Sheets/72K98/D672K98-sht-xs

CMT
License No. 184-000613

USER NAME = rheady	DESIGNED - MJO	REVISED -	
	DRAWN - VJR	REVISED -	
PLOT SCALE = 0.16660000 ' / in.	CHECKED - KLT	REVISED -	
PLOT DATE = 3/25/2024	DATE - MARCH 2024	REVISED -	

STATE OF ILLINOIS
DEPARTMENT OF TRANSPORTATION

FAI ROUTE 55 - INTERSTATE 55
CROSS SECTIONS

SCALE: 1"=10' | SHEET OF SHEETS | STA. TO STA.

F.A.I. RTE.	SECTION	COUNTY	TOTAL SHEETS	SHEET NO.
55	(84-2BR-1)D,BY,BP,BRR	SANGAMON	139	136

CONTRACT NO. 72K98

ILLINOIS | FED. AID PROJECT

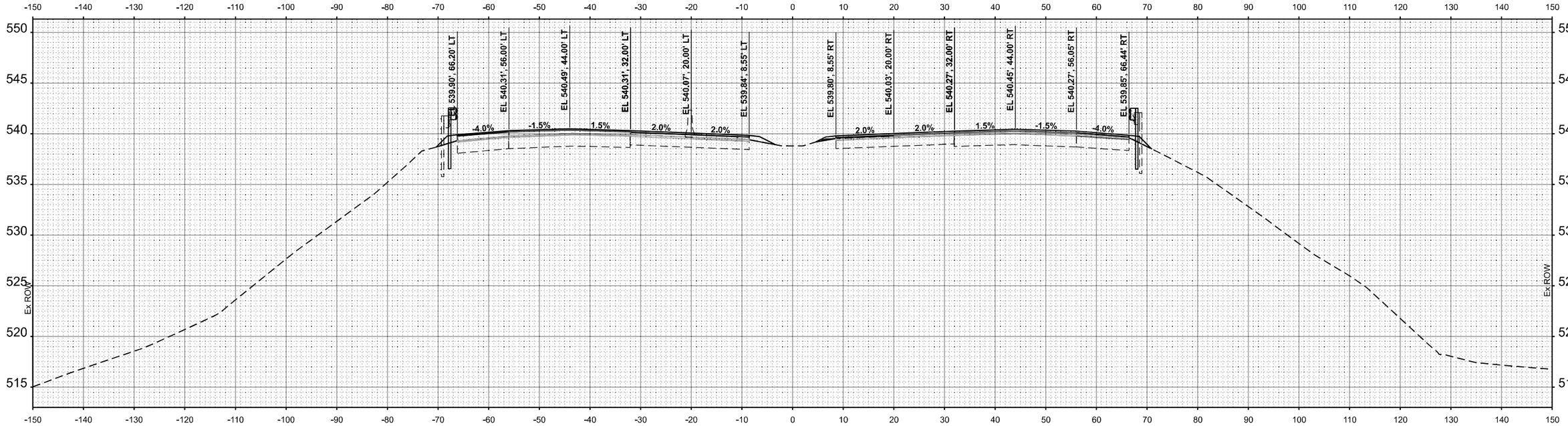

STA 806+00.00

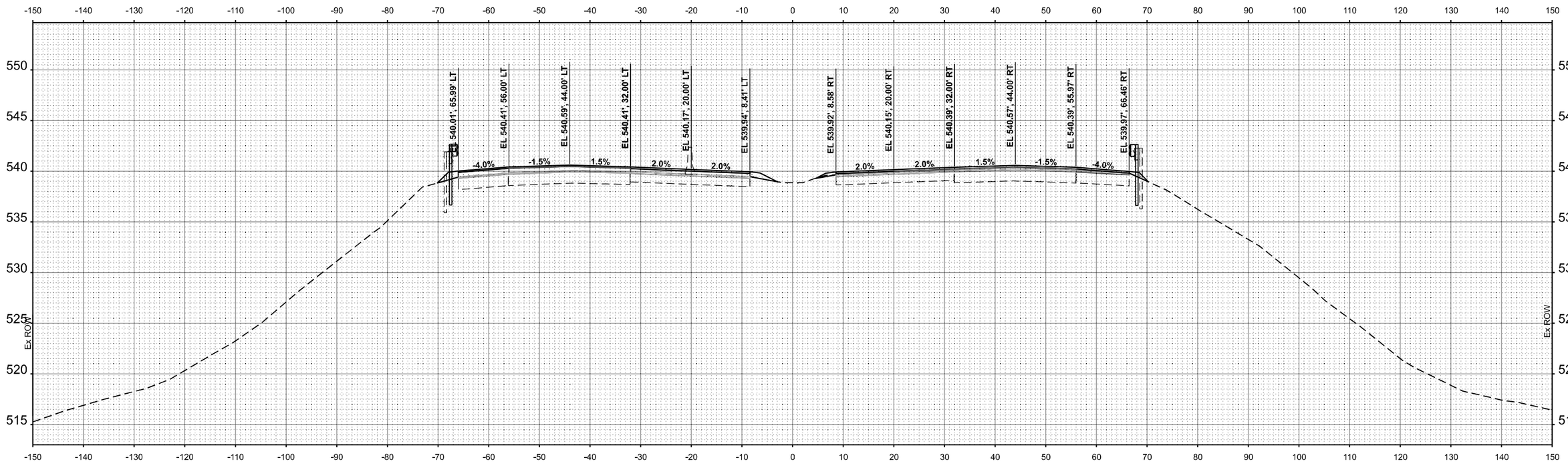

STA 805+50.00

MODEL: SHT-XS-039
FILE NAME: pw://cmengnow.bentley.com:cmenow-connect-eu-projects/Documents/DOT210041/0400410300/Sheets/72K98/D472K98sht001.dgn

CMT
License No. 184-000613

USER NAME = rheady	DESIGNED - MJO	REVISED -
	DRAWN - VJR	REVISED -
PLOT SCALE = 0.16660000 ' / in.	CHECKED - KLT	REVISED -
PLOT DATE = 3/25/2024	DATE - MARCH 2024	REVISED -

STATE OF ILLINOIS
DEPARTMENT OF TRANSPORTATION

FAI ROUTE 55 - INTERSTATE 55
CROSS SECTIONS

SCALE: 1"=10' | SHEET OF SHEETS | STA. TO STA.

F.A.I. RTE.	SECTION	COUNTY	TOTAL SHEETS	SHEET NO.
55	(84-2BR-1)D,BY,BP,BRR	SANGAMON	139	137

CONTRACT NO. 72K98

ILLINOIS | FED. AID PROJECT

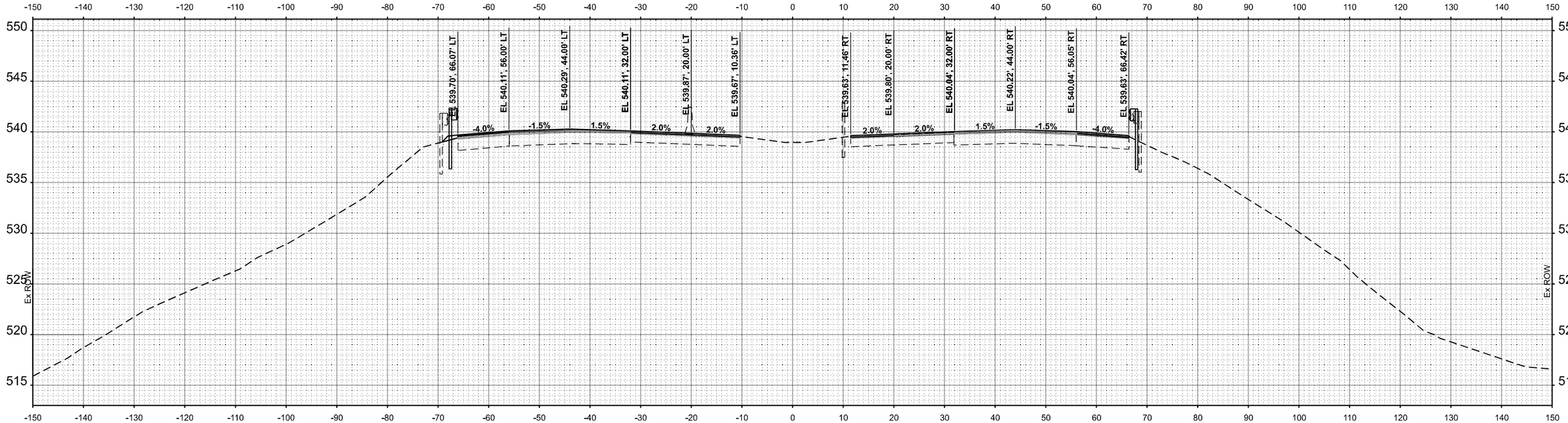

STA 807+00.00

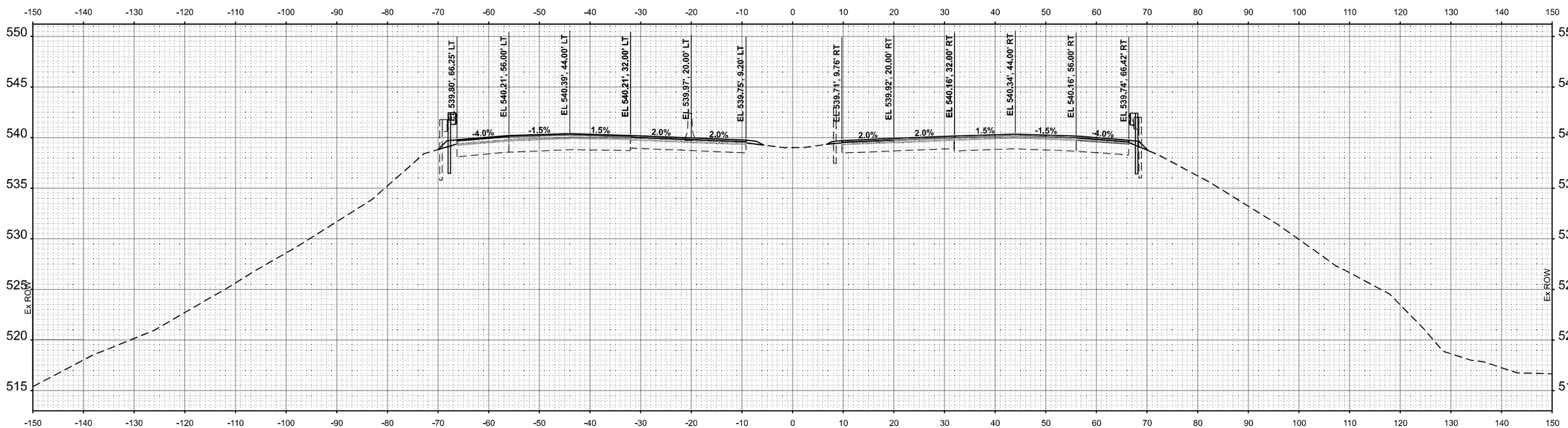

STA 806+50.00

MODEL: SHT-XS-040
FILE NAME: pw://mmengineering.bentley.com:mmeconnect-eprojects/Documents/DOT210041034004103 0/Sheets/72K98/D072K98sht-xs

CMT
License No. 184-000613 Copyright CMT, Inc.

USER NAME = rheady	DESIGNED - MJO	REVISED -	
	DRAWN - VJR	REVISED -	
PLOT SCALE = 0.16660000 ' / in.	CHECKED - KLT	REVISED -	
PLOT DATE = 3/25/2024	DATE - MARCH 2024	REVISED -	

STATE OF ILLINOIS
DEPARTMENT OF TRANSPORTATION

FAI ROUTE 55 - INTERSTATE 55
CROSS SECTIONS

SCALE: 1"=10' | SHEET OF SHEETS | STA. TO STA.

F.A.I. RTE.	SECTION	COUNTY	TOTAL SHEETS	SHEET NO.
55	(84-2BR-1)D,BY,BP,BRR	SANGAMON	139	138

CONTRACT NO. 72K98

ILLINOIS FED. AID PROJECT

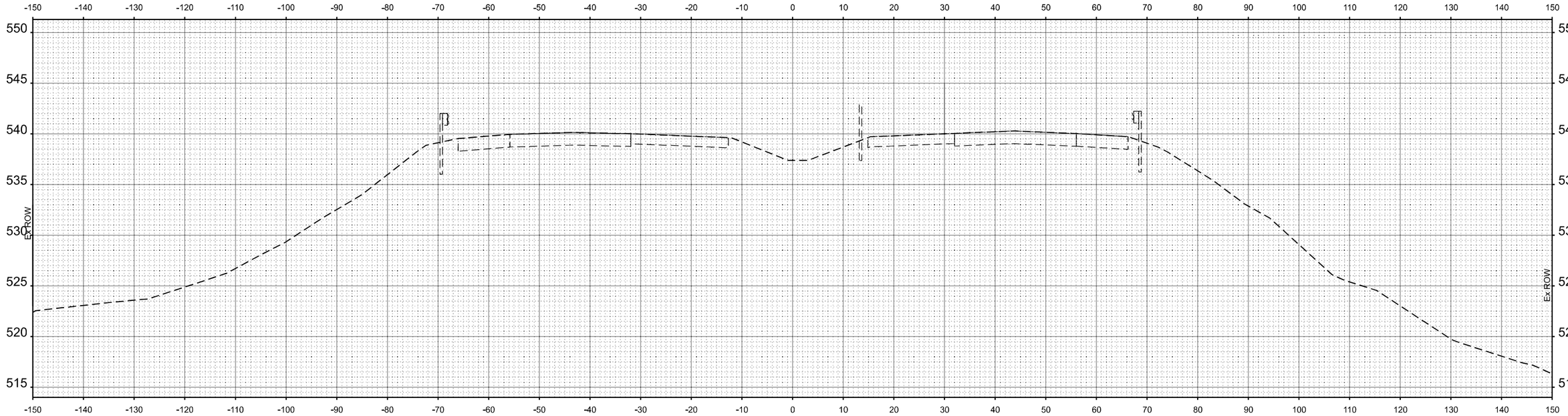

STA 808+00.00

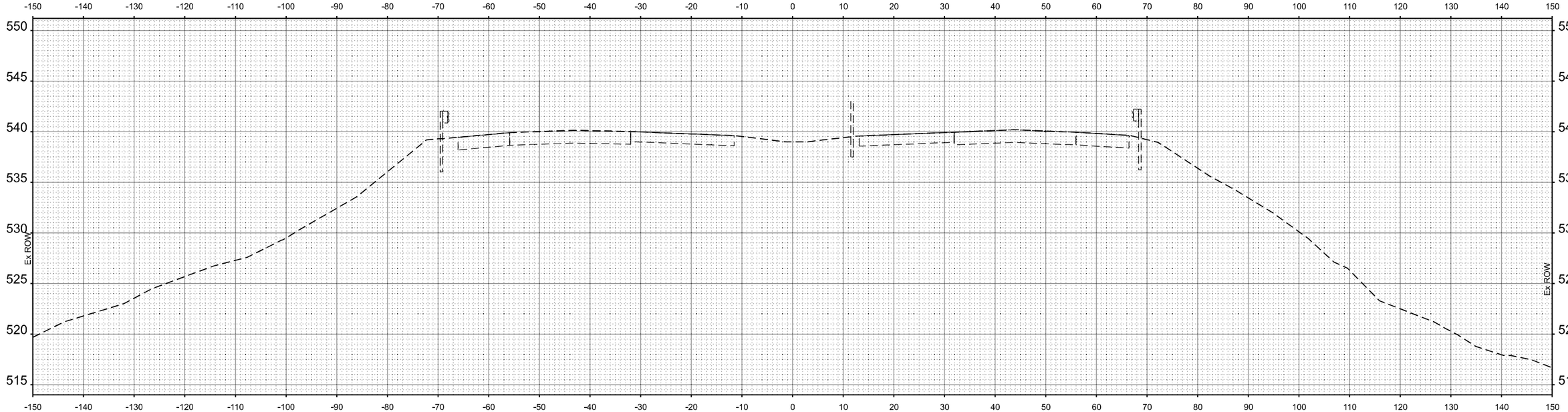

STA 807+50.00

MODEL: SHT-XS-041
FILE NAME: pw://cmengnow.bentley.com:cmeconnect-eu-projects/Documents/DOT210410420410300/Sheets/72K98/D872K98sht-xs

CMT
License No. 184-000613 © Copyright CMT, Inc.

USER NAME = rheady	DESIGNED - MJO	REVISED -
	DRAWN - VJR	REVISED -
PLOT SCALE = 0.16660000 ' / in.	CHECKED - KLT	REVISED -
PLOT DATE = 3/25/2024	DATE - MARCH 2024	REVISED -

STATE OF ILLINOIS
DEPARTMENT OF TRANSPORTATION

FAI ROUTE 55 - INTERSTATE 55
CROSS SECTIONS

SCALE: 1"=10' | SHEET OF SHEETS | STA. TO STA.

F.A.I. RTE.	SECTION	COUNTY	TOTAL SHEETS	SHEET NO.
55	(84-2BR-1)D,BY,BP,BRR	SANGAMON	139	139

CONTRACT NO. 72K98

ILLINOIS | FED. AID PROJECT