06-14-2019 LETTING ITEM 169

F.A.P. RTE.	SECTION	COUNTY	TOTAL SHEETS	SHEET NO.
338	110TS-N	DUPAGE	133	1
		ILLINOIS	CONTRACT NO. 62F19	

STATE OF ILLINOIS

DEPARTMENT OF TRANSPORTATION

PROPOSED HIGHWAY PLANS

FOR INDEX OF SHEETS, SEE SHEET NO. 2

F.A.P. 338 /IL 59 (SUTTON RD.) AT ARMY TRAIL RD.
SECTION: 110TS–N
PROJECT: HSIP–8HT8(430)
CHANNELIZATION AND TRAFFIC SIGNAL MODERNIZATION
DUPAGE COUNTY

C–91–255–17

D-91-255-17

LOCATION OF SECTION INDICATED THUS:–

PROJECT LOCATED IN:
VILLAGE OF BARTLETT
VILLAGE OF WAYNE
UNINCORPORATED DUPAGE COUNTY

TRAFFIC DATA:

ARMY TRAIL RD.
2016 – ADT = 13,700
SPEED LIMIT = 45 MPH

IL 59 (SUTTON RD.)
2016 – ADT = 37,700
SPEED LIMIT = 45 MPH

PROJECT LIMIT
IL 59 (SUTTON RD.)
STA. 516+40.8

PROJECT LIMIT
ARMY TRAIL RD.
STA 209+50

PROJECT LIMIT
ARMY TRAIL RD.
STA 194+34.0

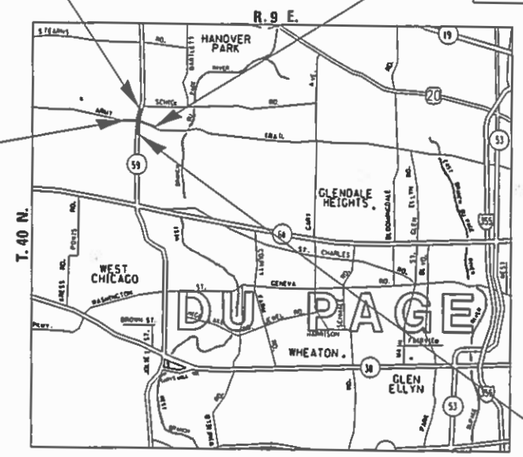

PROJECT LIMIT
IL 59 (SUTTON RD.)
STA 490+00

GROSS LENGTH = 4156.8 FT. = 0.79 MILES

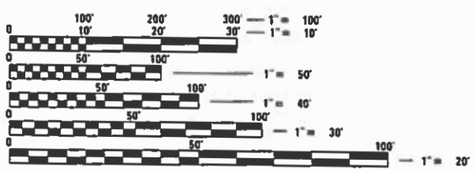

FULL SIZE PLANS HAVE BEEN PREPARED USING STANDARD ENGINEERING SCALES. REDUCED SIZED PLANS WILL NOT CONFORM TO STANDARD SCALES. IN MAKING MEASUREMENTS ON REDUCED PLANS, THE ABOVE SCALES MAY BE USED.

J.U.L.I.E.
JOINT UTILITY LOCATION INFORMATION FOR EXCAVATION
1–800–892–0123
OR 811

STATE OF ILLINOIS
DEPARTMENT OF TRANSPORTATION

SUBMITTED March 18 2019
Anthony J. Quigley 1/243
REGIONAL ENGINEER
May 10 2019
E.A. Ctk
ENGINEER OF DESIGN AND ENVIRONMENT
May 10 2019
Paul P. Ch
DIRECTOR OF HIGHWAYS PROJECT IMPLEMENTATION

PROJECT ENGINEER: DAN WILGREEN (847) 705–4240
PROJECT MANAGER: FAWAD AQUEEL (847) 705–4247

CONTRACT NO. 62F19

PRINTED BY THE AUTHORITY OF THE STATE OF ILLINOIS

INDEX OF SHEETS

404 PERMIT NOTE:

THIS PROJECT REQUIRES A US ARMY CORPS OF ENGINEERS (USACE) 404 PERMIT THAT WILL BE SECURED BY THE DEPARTMENT. AS A CONDITION OF THIS PERMIT, THE CONTRACTOR WILL NEED TO SUBMJT AN IN-STREAM WORK PLAN TO THE DEPARTMENT FOR APPROVAL. GUIDELINES ON ACCEPTABLE IN-STREAM WORK TECHNIQUES CAN BE FOUND ON THE USACE WEBSITE. THE USACE DEFINES AND DETERMINES IN-STREAM WORK. THE COST OF ALL MATERIALS AND LABOR NECESSARY TO COMPLY WITH THE ABOVE PROVISIONS TO PREPARE AND IMPLEMENT AN IN-STREAM WORK PLAN WILL NOT BE PAID FOR SEPARATELY, BUT SHALL BE CONSIDERED AS INCLUDED IN THE UNIT BID PRICES OF THE CONTRACT AND NO ADDITIONAL COMPENSATION WILL BE ALLOWED WITH THE EXCEPTION OF COFFERDAMS WHICH WILL BE PAID FOR AS COFFERDMAN (TYPE 1) (IN-STREAM /WETLAND WORK) WITH A BASIS OF PAYMENT OF EACH .

LIST OF STATE STANDARDS

STANDARD NO.	DESCRIPTION
000001-07	STANDARD SYMBOLS, ABBREVIATIONS, AND PATTERNS
001001-02	AREAS OF REINFORCEMENT BARS
280001-07	TEMPORARY EROSION CONTROL SYSTEM
406201-01	MAILBOX TURNOUTS
420001-09	PAVEMENT JOINTS
420101-06	24' (7.2 M) JOINTED PCC PAVEMENT
420106-06	36' (10.8 M) JOINTED PCC PAVEMENT
420111-04	PCC PAVEMENT ROUNDOUTS
420701-03	PAVEMENT WELDED WIRE REINFORCEMENT
424001-11	PERPENDICULAR CURB RAMPS FOR SIDEWALKS
424006-04	DIAGONAL CURB RAMPS FOR SIDEWALKS
424011-04	CORNER PARALLEL CURB RAMPS FOR SIDEWALKS
424021-05	DEPRESSED CORNER RAMPS FOR SIDEWALKS
442101-09	CLASS B PATCHES
442201-03	CLASS C AND D PATCHES
482006-03	HMA SHOULDER ADJACENT TO RIGID PAVEMENT
542301-03	PRECAST REINFORCED CONCRETE FLARED END SECTION
542601-03	REINFORCED CONCRETE PIPE ELBOW 24", 30", OR 36" (600 MM, 750 MM, OR 900 MM)
542606-02	REINFORCED CONCRETE PIPE TEE
601001-05	PIPE UNDERDRAINS
602001-02	CATCH BASIN TYPE A
602402-02	PRECAST MANHOLE, TYPE A, 5' DIAMETER
602406-10	PRECAST MANHOLE, TYPE A, 6' DIAMETER
604001-04	FRAME AND LIDS TYPE 1
604036-03	FRAM AND GRATE TYPE 8
604086-03	FRAME AND GRATE TYPE 23
606001-07	CONCRETE CURB TYPE B AND COMBINATION CONCRTE CURB AND GUTTER
606201-04	TYPE B GUTTER (INLET, OUTLET, ENTRANCE)
630001-12	STEEL PLATE BEAM GUARDRAIL
630201-07	PCC/HMA STABILIZATION AT STEEL PLATE BEAM GUARDRAIL
635001-02	DELINEATORS
701101-05	OFF-RD OPERATIONS, MULTILANE, 15' (4.5M) TO 24" (600MM) FROM PAVEMENT EDGE
701106-02	OFF-RD OPERATIONS, MULTILANE, MORE THAN 15' (4.5 m) AWAY
701421-08	LANE CLOSURE, MULTILANE, DAY OPERATIONS ONLY, FOR SPEEDS $\geq$ 45 MPH TO 55 MPH
701426-09	LANE CLOSURE, MULTILANE, INTERMITTENT OR MOVING OPERATION, FOR SPEEDS $\geq$ 45 MPH
701427-05	LANE CLOSURE, MULTILANE, INTERMITTENT OR MOVING OPERATION, FOR SPEEDS $\leq$ 40 MPH
701601-09	URBAN LANE CLOSURE, MULTILANE, 1W OR 2W WITH NONTRAVERSABLE MEDIAN
701606-10	URBAN SINGLE LANE CLOSURE, MULTILANE, 2W WITH MOUNTABLE MEDIAN
701701-10	URBAN LANE CLOSURE, MULTILANE INTERSECTION
701901-08	TRAFFIC CONTOL DEVICES
704001-08	TEMPORARY CONCRETE BARRIER
720001-01	SIGN PANEL MOUNTING DETAILS
720006-04	SIGN PANEL ERECTION DETAILS
725001-01	OBJECT AND TERMINAL MARKERS
728001-01	TELESCOPING STEEL SIGN SUPPORT
780001-05	TYPICAL PAVEMENT MARKINGS
781001-04	TYPICAL APPLICATIONS RAISED REFLECTIVE PAVEMENT MARKERS
782006	GUARDRAIL AND BARRIER WALL REFLECTOR MOUNTING DETAILS
814001-03	HANDHOLES
814006-02	DOUBLE HANDHOLE
857001-01	STANDARD PHASE DESIGNATION DIAGRAMS AND PHASE SEQUENCES
862001-01	UNINTERRUPTABLE POWER SUPPLY (UPS)
873001-02	TRAFFIC SIGNAL GROUNDING & BONDING
877001-07	STEEL MAST ARM ASSEMBLY AND POLE 16' THROUGH 55'
877006-06	STEEL MAST ARM ASSEMBLY AND POLE WITH DUAL MAST ARMS
878001-10	CONCRETE FOUNDATION DETAILS
880001-01	SPAN WIRE MOUNTED SIGNALS AND FLASHING BEACON INSTALLATION
880006-01	TRAFFIC SIGNAL MOUNTING DETAILS
886001-01	DETECTOR LOOP INSTALLATIONS

GENERAL NOTES:

BEFORE STARTING ANY EXCAVATION, THE CONTRACTOR SHALL CALL "JULIE AT (800) 892-0123 OR 811 FOR FIELD LOCATIONS OF BURIED ELECTRIC, TELEPHONE AND GAS FACILITIES, (48 HOURS NOTIFICATION IS REQUIRED).

THE CONTRACTOR SHALL COORDINATE CONSTRUCTION ACTIVITIES WITH UTILITY COMPANIES, VILLAGE OF BARTLETT, WAYNE AND UNINCORPORATED DUPAGE COUNTY.

THE CONTRACTOR WILL NOT BE ALLOWED TO SET UP A YARD OR FIELD OFFICE ON STATE PROPERTY WITHOUT WRITTEN PERMISSION FROM THE DEPARTMENT.

BEFORE BEGINNING ANY WORK, THE CONTRACTOR SHALL RETAIN AND RECORD FOR FUTURE REFERENCE, ALL EXISTING PAVEMENT MARKING LINES (AND RAISED REFLECTIVE PAVEMENT MARKERS) IN ORDER THAT THESE LOCATIONS CAN BE RE-ESTABLISHED FOR STRIPING. EXACT LOCATIONS OF ALL PAVEMENT MARKINGS SHALL BE AS DIRECTED BY THE ENGINEER.

THE GENERAL CONTRACTOR IS REQUIRED TO HIRE AN ENVIRONMENTAL FIRM WITH AT LEAST FIVE (5) DOCUMENTED LEAKING UNDERGROUND STORAGE TANK CLEANUPS OR THAT IS PRE-QUALIFIED IN HAZARDOUS WASTE BY THE DEPARTMENT TO REMEDIATE THE SOIL CONTAMINATION AND MONITOR FOR WORKER PROTECTION.

ANY DAMAGE TO EXISTING PAVEMENT MARKINGS OR RAISED REFLECTIVE PAVEMENT MARKERS OUTSIDE THE REMOVAL LINE SHOWN ON THE PLANS SHALL BE REPLACED AT THE CONTRACTOR'S EXPENSE.

LOCATION OF COMBINATION CONCRETE CURB AND GUTTER REMOVAL AND REPLACEMENT (OR COMBINATION CURB AND GUTTER, WITH THE TYPE SPECIFIED ON THE PLANS), WILL BE DETERMINED IN THE FIELD BY THE ENGINEER.

DRAINAGE ADJUSTMENT OR RECONSTRUCTION LOCATIONS WILL BE DETERMINED IN THE FIELD BY THE ENGINEER.

FOR FRAMES AND LIDS ADJUSTMENT WITHOUT MILLING, REUSE EXISTING FRAMES AND LIDS UNLESS OTHERWISE SPECIFIED IN THE PLANS.

FRAMES AND GRATES ADJUSTMENT OF PRIVATE UTILITIES WITHIN THE PROJECT LIMITS SHALL BE DONE BY THEIR RESPECTIVE OWNERS AND ARE NOT PART OF THIS CONTRACT.

THE CONTRACTOR SHALL CONTACT THE DISTRICT TRAFFIC CONTROL SUPERVISOR AT (847)705-4470 A MINIMUM OF 72 HOURS IN ADVANCE OF BEGINNING WORK.

THE ENGINEER SHALL CONTACT DON CHIARUGI, AREA TRAFFIC FIELD ENGINEER, AT (847) 741-9857 OR DON.CHIARUGI@ILLINOIS.GOV, A MINIMUM OF TWO (2) WEEKS PRIOR TO THE PLACEMENT OF PERMANENT PAVEMENT MARKINGS.

IT SHALL BE THE CONTRACTOR'S RESPONSIBILITY TO VERIFY ALL DIMENSIONS AND CONDITIONS EXISTING IN THE FIELD PRIOR TO ORDERING MATERIALS AND BEGINNING CONSTRUCTION. THIS SHALL INCLUDE LOCATING THE MAST ARM AND FOUNDATIONS AND VERIFYING THE MAST ARM LENGHTS.

THE CONTRACTOR SHALL BE REQUIRED TO PROVIDE ACCESS TO ABUTTING PROPERTY AT ALL TIMES DURING THE CONSTRUCTION OF THIS PROJECT.

ALL PAVEMENT MARKINGS SHALL BE PLACED THROUGHOUT THE IMPROVEMENT ACCORDING TO DISTRICT 1 TYPICAL PAVEMENT MARKING.

RAISED REFLECTIVE PAVEMENT MARKERS SHALL BE PLACED THROUGHOUT THE IMPROVEMENT ACCORDING TO THE DISTRICT STANDARDS AS NOTED IN THE DETAIL.

THE CONTRACTOR SHALL CONTACT THE ROADSIDE DEVELOPMENT UNIT IN THE BUREAU OF MAINTENANCE AT (847) 705-4171 AT LEAST 72 HOURS IN ADVANCE OF SELECTIVE CLEARING WORK TO ASSIST WITH MARKING OF TREES TO BE SAVED.

PRIOR TO EMBANKMENT PLACEMENT, ALL VEGETATION, LOOSE MATERIAL,AND UNSTABLE MATERIAL SHOULD BE REMOVED TO DEPTH ENCOUNTERED AND REPLACED WITH SUITABLE EMBANKMENT MATERIAL. ANY EMBANKMENT WIDENING ON EXISTING SLOPES SHOULD BE BENCHED IN ACCORDANCE WITH ARTICLE 205.03 OF THE STANDARD SPECIFICATIONS FOR ROAD AND BRIDGE CONSTRUCTION.

ANY AGGREGATE SUBGRADE IMPROVEMENT CONTAMINATED AND/OR DAMAGED BY THE CONTRACTOR'S VEHICLES AND/OR EQUIPMENT IS TO BE REMOVED AND REPLACED AS DIRECTED BY THE ENGINEER.

DO NOT SCALE PLANS FOR CONSTRUCTION DIMENSIONS.

PIPE UNDERDRAINS TYPE 2 SHALL BE INSTALLED ACCORDING TO SECTION 601 OF THE SSRBC AND STANDARD 601001-05. TOP OF PIPE UNDERDRAINS SHALL BE PLACED MINIMUM 6" BELOW THE AGGREGATE SUBGRADE IMPROVEMENT LAYER. THE COST OF MAKING PIPE UNDERDRAINS CONNECTIONS TO DRAINAGE STRUCTURES SHALL BE INCLUDED IN THE COST OF THE PIPE UNDERDRAINS.

THE SUBGRADE STABILITY SHALL BE VERIFIED BY PROOF ROLLING WITH A FULLY LOADED TANDEM-AXLE TRUCK.

AGGREGATE SUBGRADE IMPROVEMENT (CU YD) HAS BEEN PROVIDED FOR USE AT THE LOCATIONS INDICATED FOR SOILS THAT TEND TO BE UNSTABLE AND/OR UNSUITABLE. THE ACTUAL NEED FOR REMOVAL AND REPLACEMENT WITH AGGREGATE SUBGRADE IMPROVEMENT (CUYD) WILL BE DETERMINED IN THE FIELD AT THE TIME OF CONSTRUCTION BY THE GEOTECHNICAL ENGINEER. ALL POTENTIALLY UNSTABLE SOILS SHOULD BE TESTED WITH A STATIC OR DYNAMIC CONE PENETROMETER AND TREATED IN ACCORDANCE WITH ARTICLE 301.04 OF THE SSRBC AND THE IDOT SUBGRADE STABILITY MANUAL.

THE DEPARTMENT HAS NOT OBTAINED ANY PERMITS FOR OFFSITE BORROW, WASTE, USE (BWU) AREAS. PRIOR TO WORKING IN BWU AREAS, IF THE CONTRACTOR CHOOSES TO USE ACTIVITIES REQUIRING PERMITS IT IS THE CONTRACTOR5/32 S RESPONSIBILITY TO SECURE THE PROPER PERMITS. IN ADDITION TO THE BORROW REVIEW (BDE 2289) and USE/WASTE REVIEW(BDE 2290) SUBMITTALS, THE CONTRACTOR SHALL SUBMIT AN EROSION AND SEDIMENT CONTROL (ESC) PLAN FOR EVERY BWU SITE TO THE DEPARTMENT FOR ACCEPTANCE. GUIDELINES FOR ACCEPTABLE BWU PRACTICES CAN BE FOUND IN SECTION II.G.1 AND 2 of the SWPPP. THE COST OF ALL MATERIALS AND LABOR NECESSARY TO COMPLY WITH THE ABOVE PROVISIONS TO PREPARE AND IMPLEMENT ESC PLANS WILL NOT BE PAID FOR SEPARATELY, BUT SHALL BE CONSIDERED AS INCLUDED IN THE UNIT BID PRICES OF THE CONTRACT AND NO ADDITIONAL COMPENSATION WILL BE ALLOWED.

SUMMARY OF QUANTITIES			URBAN	CONSTRUCTION TYPE CODE					
CODE NO	ITEM	UNIT	TOTAL QUANTITIES	90% FED 10% STATE 0004 ROADWAY	90% FED 5% STATE 5% DUPAGE COUNTY 0021 SIGNALS	100% VILLAGE OF BARTLETT 0021 EVP	80% FED 20% VILLAGE OF BARTLETT 0021 PATH		
20100110	TREE REMOVAL (6 TO 15 UNITS DIAMETER)	UNIT	20	20					
20101000	TEMPORARY FENCE	FOOT	488	488					
20200100	EARTH EXCAVATION	CU YD	8015	8015					
20800150	TRENCH BACKFILL	CU YD	312	312					
20900110	POROUS GRANULAR BACKFILL	CU YD	142	142					
21001000	GEOTECHNICAL FABRIC FOR GROUND STABILIZATION	SQ YD	2500	2500					
21101505	TOPSOIL EXCAVATION AND PLACEMENT	CU YD	1227	1227					
21400100	GRADING AND SHAPING DITCHES	FOOT	4253	4253					
25000210	SEEDING, CLASS 2A	ACRE	0.4	0.4					
25000400	NITROGEN FERTILIZER NUTRIENT	POUND	34	34					
25000600	POTASSIUM FERTILIZER NUTRIENT	POUND	34	34					
25100115	MULCH, METHOD 2	ACRE	2.3	2.3					
25100630	EROSION CONTROL BLANKET	SQ YD	5210	5210					
25200110	SODDING, SALT TOLERANT	SQ YD	3221	3221					
28000250	TEMPORARY EROSION CONTROL SEEDING	POUND	230	230					
28000305	TEMPORARY DITCH CHECKS	FOOT	96	96					
28000400	PERIMETER EROSION BARRIER	FOOT	5000	5000					

SUMMARY OF QUANTITIES			URBAN	CONSTRUCTION TYPE CODE					
CODE NO	ITEM	UNIT	TOTAL QUANTITIES	90% FED 10% STATE 0004 ROADWAY	90% FED 5% STATE 5% DUPAGE COUNTY 0021 SIGNALS	100% VILLAGE OF BARTLETT 0021 EVP	80% FED 20% VILLAGE OF BARTLETT 0021 PATH		
28000510	INLET FILTERS	EACH	13	13					
28100107	STONE RIPRAP, CLASS A4	SQ YD	430	430					
28200200	FILTER FABRIC	SQ YD	430	430					
30300001	AGGREGATE SUBGRADE IMPROVEMENT	CU YD	708	708					
30300112	AGGREGATE SUBGRADE IMPROVEMENT 12"	SQ YD	6297	6297					
31101200	SUBBASE GRANULAR MATERIAL, TYPE B 4"	SQ YD	2437	2437					
35101800	AGGREGATE BASE COURSE, TYPE B 6"	SQ YD	2229	22			2207		
35501308	HOT-MIX ASPHALT BASE COURSE, 6"	SQ YD	150	150					
35501314	HOT-MIX ASPHALT BASE COURSE, 7 1/2"	SQ YD	517	517					
35501316	HOT-MIX ASPHALT BASE COURSE, 8"	SQ YD	186	186					
40600275	BITUMINOUS MATERIALS (PRIME COAT)	POUND	5693	787			4906		
40600290	BITUMINOUS MATERIALS (TACK COAT)	POUND	5043	5043					
40600400	MIXTURE FOR CRACKS, JOINTS, AND FLANGWAYS	TON	9.5	9.5					
40600827	POLYMERIZED LEVELING BINDER (MACHINE METHOD), IL-4.75, N50	TON	272	272					
	SPECIALTY ITEMS								

FILE NAME = pw:\\planroom.dot.illinois.gov:PWIDOT\Documents\IDOT Offices\District 1\Projects\P105014\Drawings\Design\P105014-sht-SOQ.dgn	USER NAME = kalorm	DESIGNED	REVISED
		DRAWN	REVISED
	PLOT SCALE = 100.0000 ' / in.	CHECKED	REVISED
	PLOT DATE = 3/21/2019	DATE	REVISED

STATE OF ILLINOIS
DEPARTMENT OF TRANSPORTATION

IL 59 AT ARMY TRAIL ROAD
SUMMARY OF QUANTITIES

SCALE: | SHEET NO. OF SHEETS | STA. TO STA.

F.A.P. RTE.	SECTION	COUNTY	TOTAL SHEETS	SHEET NO.
338	110TS-N	DUPAGE	133	3
		CONTRACT NO. 62F19		

FED. ROAD DIST. NO. 1 | ILLINOIS | FED. AID PROJECT

REV. 5/3/19

SUMMARY OF QUANTITIES			URBAN	CONSTRUCTION TYPE CODE					
CODE NO	ITEM	UNIT	TOTAL QUANTITIES	90% FED 10% STATE 0004 ROADWAY	90% FED 5% STATE 5% DUPAGE COUNTY 0021 SIGNALS	100% VILLAGE OF BARTLETT 0021 EVP	80% FED 20% VILLAGE OF BARTLETT 0021 PATH		
40600985	PORTLAND CEMENT CONCRETE SURFACE	SQ YD	859	859					
	REMOVAL - BUTT JOINT								
40603335	HOT-MIX ASPHALT SURFACE COURSE, MIX	TON	284	42			242		
	"D", N50								
40603565	POLYMERIZED HOT-MIX ASPHALT SURFACE	TON	751	751					
	COURSE, MIX "E", N70								
42000511	PORTLAND CEMENT CONCRETE PAVEMENT 10	SQ YD	2551	2551					
	1/2" (JOINTED)								
42001300	PROTECTIVE COAT	SQ YD	5099	5073			26		
42300600	PORTLAND CEMENT CONCRETE DRIVEWAY	SQ YD	138	138					
	PAVEMENT, 10 INCH								
42400200	PORTLAND CEMENT CONCRETE SIDEWALK 5 INCH	SQ FT	307	76			231		
* 42400800	DETECTABLE WARNINGS	SQ FT	290	16			274		
44000100	PAVEMENT REMOVAL	SQ YD	3895	3895					
44000200	DRIVEWAY PAVEMENT REMOVAL	SQ YD	594	594					
44000500	COMBINATION CURB AND GUTTER REMOVAL	FOOT	6919	6919					
44000600	SIDEWALK REMOVAL	SQ FT	75	75					
44003100	MEDIAN REMOVAL	SQ FT	21931	21931					

SUMMARY OF QUANTITIES			URBAN	CONSTRUCTION TYPE CODE					
CODE NO	ITEM	UNIT	TOTAL QUANTITIES	90% FED 10% STATE 0004 ROADWAY	90% FED 5% STATE 5% DUPAGE COUNTY 0021 SIGNALS	100% VILLAGE OF BARTLETT 0021 EVP	80% FED 20% VILLAGE OF BARTLETT 0021 PATH		
44004250	PAVED SHOULDER REMOVAL	SQ YD	545	545					
44200966	CLASS B PATCHES, TYPE I, 10 INCH	SQ YD	5	5					
44200970	CLASS B PATCHES, TYPE II, 10 INCH	SQ YD	103	103					
44200978	CLASS B PATCHES, TYPE I, 11 INCH	SQ YD	30	30					
44200982	CLASS B PATCHES, TYPE II, 11 INCH	SQ YD	227	227					
44201299	DOWEL BARS 1 1/2"	EACH	907	907					
44201765	CLASS D PATCHES, TYPE II, 10 INCH	SQ YD	342	342					
44201769	CLASS D PATCHES, TYPE III, 10 INCH	SQ YD	452	452					
44201771	CLASS D PATCHES, TYPE IV, 10 INCH	SQ YD	76	76					
50100100	REMOVAL OF EXISTING STRUCTURES	EACH	2	2					
50105220	PIPE CULVERT REMOVAL	FOOT	128	128					
50500505	STUD SHEAR CONNECTORS	EACH	235	235					
50800205	REINFORCEMENT BARS, EPOXY COATED	POUND	5900	5900					
52200100	FURNISHING SOLDIER PILES (HP SECTION)	FOOT	1290	1290					
52200150	DRIVING SOLDIER PILES	FOOT	1290	1290					

* SPECIALTY ITEMS

FILE NAME = pw:\\planroom.dot.illinois.gov:PWIDOT\Documents\IDOT Offices\District 1\Projects\P105014\DRAWING\Design\P105014-sht-S00.dgn	USER NAME = kalorm	DESIGNED	REVISED
		DRAWN	REVISED
	PLOT SCALE = 100.0000 ' / in.	CHECKED	REVISED
	PLOT DATE = 3/21/2019	DATE	REVISED

STATE OF ILLINOIS
DEPARTMENT OF TRANSPORTATION

IL 59 AT ARMY TRAIL ROAD
SUMMARY OF QUANTITIES

SCALE: | SHEET NO. OF SHEETS | STA. TO STA.

F.A.P. RTE.	SECTION	COUNTY	TOTAL SHEETS	SHEET NO.
338	110TS-N	DUPAGE	133	4
		CONTRACT NO. 62F19		

FED. ROAD DIST. NO. 1 | ILLINOIS | FED. AID PROJECT

REV. 5/3/19

SUMMARY OF QUANTITIES			URBAN TOTAL QUANTITIES	CONSTRUCTION TYPE CODE					
CODE NO	ITEM	UNIT		90% FED 10% STATE 0004 ROADWAY	90% FED 5% STATE 5% DUPAGE COUNTY 0021 SIGNALS	100% VILLAGE OF BARTLETT 0021 EVP	80% FED 20% VILLAGE OF BARTLETT 0021 PATH		
52200250	UNTREATED TIMBER LAGGING	SQ FT	1434	1434					
52200900	CONCRETE STRUCTURES (RETAINING WALL)	CU YD	53.2	53.2					
54213657	PRECAST REINFORCED CONCRETE FLARED END	EACH	3	3					
	SECTIONS 12"								
54213660	PRECAST REINFORCED CONCRETE FLARED END	EACH	1	1					
	SECTIONS 15"								
54213663	PRECAST REINFORCED CONCRETE FLARED END	EACH	3	3					
	SECTIONS 18"								
54213669	PRECAST REINFORCED CONCRETE FLARED END	EACH	1	1					
	SECTIONS 24"								
542A2737	PIPE CULVERTS, CLASS A, TYPE 4 12"	FOOT	28	28					
550A0340	STORM SEWERS, CLASS A, TYPE 2 12"	FOOT	778	778					
550A0360	STORM SEWERS, CLASS A, TYPE 2 15"	FOOT	296	296					
550A0380	STORM SEWERS, CLASS A, TYPE 2 18"	FOOT	943	943					
550A0410	STORM SEWERS, CLASS A, TYPE 2 24"	FOOT	55	55					
550A0430	STORM SEWERS, CLASS A, TYPE 2 30"	FOOT	11	11					
550A0450	STORM SEWERS, CLASS A, TYPE 2 36"	FOOT	167	167					
550A0940	STORM SEWERS, CLASS A, TYPE 4 12"	FOOT	466	466					

SUMMARY OF QUANTITIES			URBAN TOTAL QUANTITIES	CONSTRUCTION TYPE CODE					
CODE NO	ITEM	UNIT		90% FED 10% STATE 0004 ROADWAY	90% FED 5% STATE 5% DUPAGE COUNTY 0021 SIGNALS	100% VILLAGE OF BARTLETT 0021 EVP	80% FED 20% VILLAGE OF BARTLETT 0021 PATH		
550A0960	STORM SEWERS, CLASS A, TYPE 4 15"	FOOT	162	162					
550A0980	STORM SEWERS, CLASS A, TYPE 4 18"	FOOT	103	103					
55100500	STORM SEWER REMOVAL 12"	FOOT	1885	1885					
55100700	STORM SEWER REMOVAL 15"	FOOT	65	65					
55101200	STORM SEWER REMOVAL 24"	FOOT	261	261					
58700300	CONCRETE SEALER	SQ FT	1020	1020					
59100100	GEOCOMPOSITE WALL DRAIN	SQ YD	107	107					
59300100	CONTROLLED LOW-STRENGTH MATERIAL	CU YD	27	27					
60100060	CONCRETE HEADWALLS FOR PIPE DRAINS	EACH	4	4					
60108100	PIPE UNDERDRAINS 4" (SPECIAL)	FOOT	100	100					
60108204	PIPE UNDERDRAINS, TYPE 2, 4"	FOOT	4447	4447					
60200105	CATCH BASINS, TYPE A, 4'-DIAMETER, TYPE	EACH	2	2					
	1 FRAME, OPEN LID								
60200205	CATCH BASINS, TYPE A, 4'-DIAMETER, TYPE	EACH	4	4					
	1 FRAME, CLOSED LID								
60200805	CATCH BASINS, TYPE A, 4'-DIAMETER, TYPE	EACH	2	2					
	8 GRATE								
	SPECIALTY ITEMS								

FILE NAME = pw:\\planroom.dot.illinois.gov:PWIDOT\Documents\IDOT Offices\District 1\Projects\P105014\Drawings\Design\P105014-sht-S00.dgn	USER NAME = kalorm	DESIGNED	REVISED
		DRAWN	REVISED
	PLOT SCALE = 100.0000 ' / in.	CHECKED	REVISED
	PLOT DATE = 3/21/2019	DATE	REVISED

STATE OF ILLINOIS
DEPARTMENT OF TRANSPORTATION

IL 59 AT ARMY TRAIL ROAD
SUMMARY OF QUANTITIES

SCALE: | SHEET NO. OF SHEETS | STA. TO STA.

F.A.P. RTE.	SECTION	COUNTY	TOTAL SHEETS	SHEET NO.
338	110TS-N	DUPAGE	133	5
		CONTRACT NO. 62F19		

FED. ROAD DIST. NO. 1 | ILLINOIS | FED. AID PROJECT

REV. 5/3/19

SUMMARY OF QUANTITIES			URBAN TOTAL QUANTITIES	CONSTRUCTION TYPE CODE					
CODE NO	ITEM	UNIT		90% FED 10% STATE 0004 ROADWAY	90% FED 5% STATE 5% DUPAGE COUNTY 0021 SIGNALS	100% VILLAGE OF BARTLETT 0021 EVP	80% FED 20% VILLAGE OF BARTLETT 0021 PATH		
60201330	CATCH BASINS, TYPE A, 4'-DIAMETER, TYPE	EACH	3	3					
	23 FRAME AND GRATE								
60201340	CATCH BASINS, TYPE A, 4" DIAMETER, TYPE 24 FRAME AND GRATE	EACH	7	7					
60207605	CATCH BASINS, TYPE C, TYPE 8 GRATE	EACH	1	1					
60221100	MANHOLES, TYPE A, 5'-DIAMETER, TYPE 1	EACH	10	10					
	FRAME, CLOSED LID								
60223800	MANHOLES, TYPE A, 6'-DIAMETER, TYPE 1	EACH	1	1					
	FRAME, CLOSED LID								
60237460	INLETS, TYPE A, TYPE 23 FRAME AND GRATE	EACH	6	6					
60237470	INLETS, TYPE A, TYPE 24 FRAME AND GRATE	EACH	6	6					
60250200	CATCH BASINS TO BE ADJUSTED	EACH	3	3					
60251740	CATCH BASINS TO BE ADJUSTED WITH NEW TYPE 24 FRAME AND GRATE	EACH	1	1					
60500040	REMOVING MANHOLES	EACH	10	10					
60500050	REMOVING CATCH BASINS	EACH	1	1					
60500060	REMOVING INLETS	EACH	39	39					
60300105	FRAMES AND GRATES TO BE ADJUSTED	EACH	4	4					
60500070	REMOVING MANHOLES TO MAINTAIN FLOW	EACH	1	1					
60300305	FRAMES AND LIDS TO BE ADJUSTED	EACH	1	4					
60500105	FILLING MANHOLES	EACH	3	3					
60603800	COMBINATION CONCRETE CURB AND GUTTER,	FOOT	299	299					
	TYPE B-6.12								
60605000	COMBINATION CONCRETE CURB AND GUTTER,	FOOT	4122.5	4122.5					
	TYPE B-6.24								
60608300	COMBINATION CONCRETE CURB AND GUTTER,	FOOT	2771.5	2771.5					
	TYPE M-2.12								

SUMMARY OF QUANTITIES				URBAN TOTAL QUANTITIES	CONSTRUCTION TYPE CODE					
	CODE NO	ITEM	UNIT		90% FED 10% STATE 0004 ROADWAY	90% FED 5% STATE 5% DUPAGE COUNTY 0021 SIGNALS	100% VILLAGE OF BARTLETT 0021 EVP	80% FED 20% VILLAGE OF BARTLETT 0021 PATH		
	60618320	CONCRETE MEDIAN SURFACE, 6 INCH	SQ FT	1749	1749					
	60626300	STABILIZED MEDIAN SURFACE	SQ YD	3351	3351					
*	63000001	STEEL PLATE BEAM GUARDRAIL, TYPE A, 6	FOOT	337.5	337.5					
		FOOT POSTS								
*	63100045	TRAFFIC BARRIER TERMINAL, TYPE 2	EACH	1	1					
*	63100167	TRAFFIC BARRIER TERMINAL, TYPE 1	EACH	2	2					
		(SPECIAL) TANGENT								
	63200310	GUARDRAIL REMOVAL	FOOT	439	439					
*	66900200	NON-SPECIAL WASTE DISPOSAL	CU YD	4740	4740					
*	66900530	SOIL DISPOSAL ANALYSIS	EACH	5	5					
*	66901001	REGULATED SUBSTANCES PRE-CONSTRUCTION	LSUM	1	1					
		PLAN								
*	66901002	ON-SITE MONITORING OF REGULATED	CAL DA	11	11					
		SUBSTANCES								
*	66901003	REGULATED SUBSTANCES FINAL CONSTRUCTION	LSUM	1	1					
		REPORT								
	67000400	ENGINEER'S FIELD OFFICE, TYPE A	CAL MO	18	18					
	67100100	MOBILIZATION	L SUM	1	1					
		* SPECIALTY ITEMS								

FILE NAME = pw:\\planroom.dot.illinois.gov:PWIDOT\Documents\IDOT Offices\District 1\Projects\P105014\DRAWING\Design\P105014-sht-SOQ.dgn	USER NAME = kalorm	DESIGNED	REVISED
		DRAWN	REVISED
	PLOT SCALE = 100.0000 ' / in.	CHECKED	REVISED
	PLOT DATE = 3/21/2019	DATE	REVISED

STATE OF ILLINOIS
DEPARTMENT OF TRANSPORTATION

IL 59 AT ARMY TRAIL ROAD
SUMMARY OF QUANTITIES

SCALE: | SHEET NO. OF SHEETS | STA. TO STA.

F.A.P. RTE.	SECTION	COUNTY	TOTAL SHEETS	SHEET NO.
338	110TS-N	DUPAGE	133	6
		CONTRACT NO. 62F19		

FED. ROAD DIST. NO. 1 | ILLINOIS | FED. AID PROJECT

REV. 5/3/19

SUMMARY OF QUANTITIES			URBAN TOTAL QUANTITIES	CONSTRUCTION TYPE CODE					
CODE NO	ITEM	UNIT		90% FED 10% STATE 0004 ROADWAY	90% FED 5% STATE 5% DUPAGE COUNTY 0021 SIGNALS	100% VILLAGE OF BARTLETT 0021 EVP	80% FED 20% VILLAGE OF BARTLETT 0021 PATH		
70107025	CHANGEABLE MESSAGE SIGN	CAL DA	100	100					
70300100	SHORT TERM PAVEMENT MARKING	FOOT	2219	2219					
70300150	SHORT TERM PAVEMENT MARKING REMOVAL	SQ FT	494	494					
70300210	TEMPORARY PAVEMENT MARKING LETTERS AND SYMBOLS	SQ FT	542	542					
70300220	TEMPORARY PAVEMENT MARKING - LINE 4"	FOOT	9770	9770					
70300240	TEMPORARY PAVEMENT MARKING - LINE 6"	FOOT	2761	2761					
70300260	TEMPORARY PAVEMENT MARKING - LINE 12"	FOOT	490	490					
70300280	TEMPORARY PAVEMENT MARKING - LINE 24"	FOOT	216	216					
70300900	PAVEMENT MARKING TAPE, TYPE IV - LETTERS AND SYMBOLS	SQ FT	366	366					
70300904	PAVEMENT MARKING TAPE, TYPE IV 4"	FOOT	38059	38059					
70300906	PAVEMENT MARKING TAPE, TYPE IV 6"	FOOT	4641	4641					
70300924	PAVEMENT MARKING TAPE, TYPE IV 24"	FOOT	401	401					
70400100	TEMPORARY CONCRETE BARRIER	FOOT	1193	1193					
70400200	RELOCATE TEMPORARY CONCRETE BARRIER	FOOT	142	142					

	SUMMARY OF QUANTITIES			URBAN TOTAL QUANTITIES	CONSTRUCTION TYPE CODE					
	CODE NO	ITEM	UNIT		90% FED 10% STATE 0004 ROADWAY	90% FED 5% STATE 5% DUPAGE COUNTY 0021 SIGNALS	100% VILLAGE OF BARTLETT 0021 EVP	80% FED 20% VILLAGE OF BARTLETT 0021 PATH		
	70600260	IMPACT ATTENUATORS, TEMPORARY (FULLY REDIRECTIVE, NARROW), TEST LEVEL 3	EACH	7	7					
	70600332	IMPACT ATTENUATORS, RELOCATE (FULLY REDIRECTIVE, NARROW), TEST LEVEL 3	EACH	2	2					
*	72000100	SIGN PANEL - TYPE 1	SQ FT	276.6	233.1	43.5				
*	72000200	SIGN PANEL - TYPE 2	SQ FT	19.5		19.5				
*	72400100	REMOVE SIGN PANEL ASSEMBLY - TYPE A	EACH	37	37					
*	72800100	TELESCOPING STEEL SIGN SUPPORT	FOOT	390	390					
*	78000100	THERMOPLASTIC PAVEMENT MARKING - LETTERS AND SYMBOLS	SQ FT	155	155					
*	78000200	THERMOPLASTIC PAVEMENT MARKING - LINE 4"	FOOT	4904	4904					
*	78000400	THERMOPLASTIC PAVEMENT MARKING - LINE 6"	FOOT	935	935					
*	78000600	THERMOPLASTIC PAVEMENT MARKING - LINE 12"	FOOT	233	233					
*	78009000	MODIFIED URETHANE PAVEMENT MARKING - LETTERS AND SYMBOLS	SQ FT	753	753					

* SPECIALTY ITEMS

FILE NAME = pw:\\planroom.dot.illinois.gov:PWIDOT\Documents\IDOT Offices\District 1\Projects\P105014\Drawings\Design\P105014-sht-SOQ.dgn	USER NAME = kalorm	DESIGNED	REVISED
	PLOT SCALE = 100.0000 ' / in.	DRAWN	REVISED
	PLOT DATE = 3/21/2019	CHECKED	REVISED
		DATE	REVISED

STATE OF ILLINOIS
DEPARTMENT OF TRANSPORTATION

IL 59 AT ARMY TRAIL ROAD
SUMMARY OF QUANTITIES

SCALE: | SHEET NO. OF SHEETS | STA. TO STA.

F.A.P. RTE.	SECTION	COUNTY	TOTAL SHEETS	SHEET NO.
338	11OTS-N	DUPAGE	133	7
		CONTRACT NO. 62F19		

FED. ROAD DIST. NO. 1 | ILLINOIS | FED. AID PROJECT

REV. 5/3/19

	SUMMARY OF QUANTITIES			URBAN TOTAL QUANTITIES	CONSTRUCTION TYPE CODE					
	CODE NO	ITEM	UNIT		90% FED 10% STATE 0004 ROADWAY	90% FED 5% STATE 5% DUPAGE COUNTY 0021 SIGNALS	100% VILLAGE OF BARTLETT 0021 EVP	80% FED 20% VILLAGE OF BARTLETT 0021 PATH		
*	78009004	MODIFIED URETHANE PAVEMENT MARKING -	FOOT	14625	14625					
		LINE 4"								
*	78009006	MODIFIED URETHANE PAVEMENT MARKING -	FOOT	3348	3348					
		LINE 6"								
*	78009012	MODIFIED URETHANE PAVEMENT MARKING -	FOOT	257	257					
		LINE 12"								
*	78009024	MODIFIED URETHANE PAVEMENT MARKING -	FOOT	325	325					
		LINE 24"								
*	78100100	RAISED REFLECTIVE PAVEMENT MARKER	EACH	387	387					
*	78200011	BARRIER WALL REFLECTORS, TYPE C	EACH	32	32					
	78300200	RAISED REFLECTIVE PAVEMENT MARKER	EACH	370	370					
		REMOVAL								
	81028200	UNDERGROUND CONDUIT, GALVANIZED STEEL,	FOOT	10		10				
		2" DIA.								
	81028220	UNDERGROUND CONDUIT, GALVANIZED STEEL,	FOOT	144		144				
		3" DIA.								
	81028240	UNDERGROUND CONDUIT, GALVANIZED STEEL,	FOOT	525		525				
		4" DIA.								
	81400100	HANDHOLE	EACH	5		5				
	81400200	HEAVY-DUTY HANDHOLE	EACH	2		2				

	SUMMARY OF QUANTITIES			URBAN TOTAL QUANTITIES	CONSTRUCTION TYPE CODE					
	CODE NO	ITEM	UNIT		90% FED 10% STATE 0004 ROADWAY	90% FED 5% STATE 5% DUPAGE COUNTY 0021 SIGNALS	100% VILLAGE OF BARTLETT 0021 EVP	80% FED 20% VILLAGE OF BARTLETT 0021 PATH		
	81400300	DOUBLE HANDHOLE	EACH	2		2				
	85000200	MAINTENANCE OF EXISTING TRAFFIC SIGNAL	EACH	2		2				
		INSTALLATION								
	86400100	TRANSCEIVER - FIBER OPTIC	EACH	1		1				
	87300925	ELECTRIC CABLE IN CONDUIT, TRACER, NO.	FOOT	6084		6084				
		14 1C								
	87301215	ELECTRIC CABLE IN CONDUIT, SIGNAL NO.	FOOT	233		233				
		14 2C								
	87301225	ELECTRIC CABLE IN CONDUIT, SIGNAL NO.	FOOT	974		974				
		14 3C								
	87301245	ELECTRIC CABLE IN CONDUIT, SIGNAL NO.	FOOT	2859		2859				
		14 5C								
	87301255	ELECTRIC CABLE IN CONDUIT, SIGNAL NO.	FOOT	1419		1419				
		14 7C								
	87301305	ELECTRIC CABLE IN CONDUIT, LEAD-IN, NO.	FOOT	2962		2962				
		14 1 PAIR								
	87301805	ELECTRIC CABLE IN CONDUIT, SERVICE, NO.	FOOT	95		95				
		6 2 C								
	87301900	ELECTRIC CABLE IN CONDUIT, EQUIPMENT	FOOT	719		719				
		GROUNDING CONDUCTOR, NO. 6 1C								
		* SPECIALTY ITEMS								

FILE NAME = pw:\\planroom.dot.illinois.gov:PWIDOT\Documents\IDOT Offices\District 1\Projects\P105014\DRAWING\Design\P105014-sht-S00.dgn	USER NAME = kalorm	DESIGNED	REVISED
		DRAWN	REVISED
	PLOT SCALE = 100.0000 ' / in.	CHECKED	REVISED
	PLOT DATE = 3/21/2019	DATE	REVISED

STATE OF ILLINOIS
DEPARTMENT OF TRANSPORTATION

IL 59 AT ARMY TRAIL ROAD
SUMMARY OF QUANTITIES

SCALE: | SHEET NO. OF SHEETS | STA. TO STA.

F.A.P. RTE.	SECTION	COUNTY	TOTAL SHEETS	SHEET NO.
338	110TS-N	DUPAGE	133	8
		CONTRACT NO. 62F19		

FED. ROAD DIST. NO. 1 | ILLINOIS | FED. AID PROJECT

REV. 5/3/19

SUMMARY OF QUANTITIES			URBAN TOTAL QUANTITIES	CONSTRUCTION TYPE CODE					
CODE NO	ITEM	UNIT		90% FED 10% STATE 0004 ROADWAY	90% FED 5% STATE 5% DUPAGE COUNTY 0021 SIGNALS	100% VILLAGE OF BARTLETT 0021 EVP	80% FED 20% VILLAGE OF BARTLETT 0021 PATH		
87502500	TRAFFIC SIGNAL POST, GALVANIZED STEEL	EACH	3		3				
	16 FT.								
87700240	STEEL MAST ARM ASSEMBLY AND POLE, 40	EACH	1		1				
	FT.								
87700250	STEEL MAST ARM ASSEMBLY AND POLE, 42	EACH	1		1				
	FT.								
87700270	STEEL MAST ARM ASSEMBLY AND POLE, 46	EACH	1		1				
	FT.								
87702615	STEEL MAST ARM ASSEMBLY AND POLE WITH	EACH	1		1				
	DUAL MAST ARMS, 38 FT. AND 55 FT.								
87800100	CONCRETE FOUNDATION, TYPE A	FOOT	16		16				
87800150	CONCRETE FOUNDATION, TYPE C	FOOT	4		4				
87800415	CONCRETE FOUNDATION, TYPE E 36-INCH	FOOT	55		55				
	DIAMETER								
87900200	DRILL EXISTING HANDHOLE	EACH	2		2				
88030020	SIGNAL HEAD, LED, 1-FACE, 3-SECTION,	EACH	9		9				
	MAST-ARM MOUNTED								
88030050	SIGNAL HEAD, LED, 1-FACE, 3-SECTION,	EACH	3		3				
	BRACKET MOUNTED								

SUMMARY OF QUANTITIES			URBAN TOTAL QUANTITIES	CONSTRUCTION TYPE CODE					
CODE NO	ITEM	UNIT		90% FED 10% STATE 0004 ROADWAY	90% FED 5% STATE 5% DUPAGE COUNTY 0021 SIGNALS	100% VILLAGE OF BARTLETT 0021 EVP	80% FED 20% VILLAGE OF BARTLETT 0021 PATH		
88030100	SIGNAL HEAD, LED, 1-FACE, 5-SECTION,	EACH	3		3				
	BRACKET MOUNTED								
88030110	SIGNAL HEAD, LED, 1-FACE, 5-SECTION,	EACH	5		5				
	MAST-ARM MOUNTED								
88102717	PEDESTRIAN SIGNAL HEAD, LED, 1-FACE,	EACH	2		2				
	BRACKET MOUNTED WITH COUNTDOWN TIMER								
88200410	TRAFFIC SIGNAL BACKPLATE, LOUVERED,	EACH	14		14				
	FORMED PLASTIC								
88500100	INDUCTIVE LOOP DETECTOR	EACH	9		9				
88600100	DETECTOR LOOP, TYPE I	FOOT	441		441				
88700200	LIGHT DETECTOR	EACH	3			3			
88700300	LIGHT DETECTOR AMPLIFIER	EACH	1			1			
88800100	PEDESTRIAN PUSH-BUTTON	EACH	2		2				
89000100	TEMPORARY TRAFFIC SIGNAL INSTALLATION	EACH	1		1				
89502300	REMOVE ELECTRIC CABLE FROM CONDUIT	FOOT	7518		7518				
89502375	REMOVE EXISTING TRAFFIC SIGNAL	EACH	1		1				
	EQUIPMENT								
89502376	REBUILD EXISTING HANDHOLE	EACH	2		2				
89502380	REMOVE EXISTING HANDHOLE	EACH	18		18				
	SPECIALTY ITEMS								

FILE NAME = pw:\\planroom.dot.illinois.gov:PWIDOT\Documents\IDOT Offices\District 1\Projects\P105014\Drawings\Design\P105014-sht-S00.dgn	USER NAME = kalorm	DESIGNED	REVISED
		DRAWN	REVISED
	PLOT SCALE = 100.0000 ' / in.	CHECKED	REVISED
	PLOT DATE = 3/21/2019	DATE	REVISED

STATE OF ILLINOIS
DEPARTMENT OF TRANSPORTATION

IL 59 AT ARMY TRAIL ROAD
SUMMARY OF QUANTITIES

SCALE: | SHEET NO. OF SHEETS | STA. TO STA.

F.A.P. RTE.	SECTION	COUNTY	TOTAL SHEETS	SHEET NO.
338	110TS-N	DUPAGE	133	9
		CONTRACT NO. 62F19		

FED. ROAD DIST. NO. 1 | ILLINOIS | FED. AID PROJECT

REV. 5/3/19

SUMMARY OF QUANTITIES

CODE NO	ITEM	UNIT	URBAN TOTAL QUANTITIES	CONSTRUCTION TYPE CODE: 90% FED 10% STATE 0004 ROADWAY	90% FED 5% STATE 5% DUPAGE COUNTY 0021 SIGNALS	100% VILLAGE OF BARTLETT 0021 EVP	80% FED 20% VILLAGE OF BARTLETT 0021 PATH		
89502382	REMOVE EXISTING DOUBLE HANDHOLE	EACH	1		1				
89502385	REMOVE EXISTING CONCRETE FOUNDATION	EACH	9		9				
K1005465	SELECTIVE MOWING STAKES	EACH	4	4					
K1005863	TREE ROOT PRUNING	EACH	5	5					
X0324085	EMERGENCY VEHICLE PRIORITY SYSTEM LINE	FOOT	727			727			
	SENSOR CABLE, NO. 20 3/C								
X0324854	WEED CONTROL, NATIVE GRASS RESTORATION	GALLON	0.15	0.15					
X0327036	BIKE PATH REMOVAL	SQ YD	14	14					
X0327980	PAVEMENT MARKING REMOVAL - WATER	SQ FT	4639	4639					
	BLASTING								
X0900075	COFFERDAM (TYPE 1) (IN-STREAM/WETLAND	EACH	1	1					
	WORK)								
X1400108	FULL-ACTUATED CONTROLLER AND TYPE SUPER	EACH	1		1				
	R CABINET (SPECIAL)								
X1400150	SERVICE INSTALLATION, GROUND MOUNTED,	EACH	1		1				
	METERED								
X1400201	RADAR VEHICLE DETECTION SYSTEM, SINGLE	EACH	2		2				
	APPROACH, STOP BAR								
X2501820	SEEDING, CLASS 5 (MODIFIED)	ACRE	1	1					

SUMMARY OF QUANTITIES

	CODE NO	ITEM	UNIT	URBAN TOTAL QUANTITIES	CONSTRUCTION TYPE CODE: 90% FED 10% STATE 0004 ROADWAY	90% FED 5% STATE 5% DUPAGE COUNTY 0021 SIGNALS	100% VILLAGE OF BARTLETT 0021 EVP	80% FED 20% VILLAGE OF BARTLETT 0021 PATH		
	X2502014	SEEDING, CLASS 4A (MODIFIED)	ACRE	1	1					
*	X2700003	GROOVING FOR RECESSED PAVEMENT MARKING	FOOT	980	980					
		8"								
*	X2700004	PREFORMED PLASTIC PAVEMENT MARKING,	FOOT	980	980					
		TYPE B - LINE 7"								
	X4021000	TEMPORARY ACCESS (PRIVATE ENTRANCE)	EACH	4		4				
	X4400110	TEMPORARY PAVEMENT REMOVAL	SQ YD	2437	2437					
	X4401198	HOT-MIX ASPHALT SURFACE REMOVAL,	SQ YD	886	886					
		VARIABLE DEPTH								
	X6020096	MANHOLES, TYPE A, 6'-DIAMETER, WITH 2	EACH	1	1					
		TYPE 1 FRAME, CLOSED LID, RESTRICTOR								
		PLATE								
	X7010216	TRAFFIC CONTROL AND PROTECTION,	L SUM	1	1					
		(SPECIAL)								
	X7010410	SPEED DISPLAY TRAILER	CAL MO	4	4					
	X7030005	TEMPORARY PAVEMENT MARKING REMOVAL	SQ FT	6101	6101					
	X8600105	MASTER CONTROLLER (SPECIAL)	EACH	1		1				
	X8620200	UNINTERRUPTABLE POWER SUPPLY, SPECIAL	EACH	1		1				

* SPECIALTY ITEMS

FILE NAME = pw:\\planroom.dot.illinois.gov:PW(DOT\Documents\IDOT Offices\District 1\Projects\P105014\Drawings\Design\P105014-sht-SOQ.dgn	USER NAME = kalorm	DESIGNED	REVISED
		DRAWN	REVISED
	PLOT SCALE = 100.0169 ' / in.	CHECKED	REVISED
	PLOT DATE = 3/21/2019	DATE	REVISED

STATE OF ILLINOIS
DEPARTMENT OF TRANSPORTATION

IL 59 AT ARMY TRAIL ROAD
SUMMARY OF QUANTITIES

SCALE: | SHEET NO. OF SHEETS | STA. TO STA.

F.A. RTE.	SECTION	COUNTY	TOTAL SHEETS	SHEET NO.
338	110TS-N	DUPAGE	133	10

CONTRACT NO. 62F19

FED. ROAD DIST. NO. 1 | ILLINOIS | FED. AID PROJECT

REV. 5/3/19

SUMMARY OF QUANTITIES			URBAN TOTAL QUANTITIES	CONSTRUCTION TYPE CODE					
CODE NO	ITEM	UNIT		90% FED 10% STATE 0004 ROADWAY	90% FED 5% STATE 5% DUPAGE COUNTY 0021 SIGNALS	100% VILLAGE OF BARTLETT 0021 EVP	80% FED 20% VILLAGE OF BARTLETT 0021 PATH		
X8710024	FIBER OPTIC CABLE IN CONDUIT, NO.	FOOT	6136		6136				
	62.5/125, MM12F SM24F								
Z0013798	CONSTRUCTION LAYOUT	L SUM	1	1					
Z0030850	TEMPORARY INFORMATION SIGNING	SQ FT	102.8	102.8					
Z0033056	OPTIMIZE TRAFFIC SIGNAL SYSTEM	EACH	1		1				
Z0046304	PIPE UNDERDRAINS FOR STRUCTURES 4"	FOOT	415	415					
Z0062456	TEMPORARY PAVEMENT	SQ YD	2437	2437					
Z0073510	TEMPORARY TRAFFIC SIGNAL TIMING	EACH	1		1				
X1700088	PRECAST NOISE WALL PANEL REMOVAL,	L. SUM	2	2					
	MODIFICATION, & RE-INSTALATION								
Ø Z0076600	TRAINEES	HOUR	1000	1000					
Ø Z0076604	TRAINEES TRAINING PROGRAM GRADUATE	HOUR	1000	1000					

SUMMARY OF QUANTITIES			URBAN TOTAL QUANTITIES	CONSTRUCTION TYPE CODE					
CODE NO	ITEM	UNIT		90% FED 10% STATE 0004 ROADWAY	90% FED 5% STATE 5% DUPAGE COUNTY 0021 SIGNALS	100% VILLAGE OF BARTLETT 0021 EVP	80% FED 20% VILLAGE OF BARTLETT 0021 PATH		
	SPECIALTY ITEMS								

FILE NAME = pw:\\planroom.dot.illinois.gov:PWIDOT\Documents\IDOT Offices\District 1\Projects\P105014\DRAWING\Design\P105014-sht-S00.dgn	USER NAME = kalorm	DESIGNED	REVISED
		DRAWN	REVISED
	PLOT SCALE = 100.0000 ' / in.	CHECKED	REVISED
	PLOT DATE = 3/21/2019	DATE	REVISED

STATE OF ILLINOIS
DEPARTMENT OF TRANSPORTATION

IL 59 AT ARMY TRAIL ROAD
SUMMARY OF QUANTITIES

SCALE: | SHEET NO. OF SHEETS | STA. TO STA.

F.A. RTE.	SECTION	COUNTY	TOTAL SHEETS	SHEET NO.
338	110TS-N	DUPAGE	133	11

CONTRACT NO. 62F19

FED. ROAD DIST. NO. 1 | ILLINOIS | FED. AID PROJECT

Ø 0042

REV. 5/7/19 REV. 5/3/19

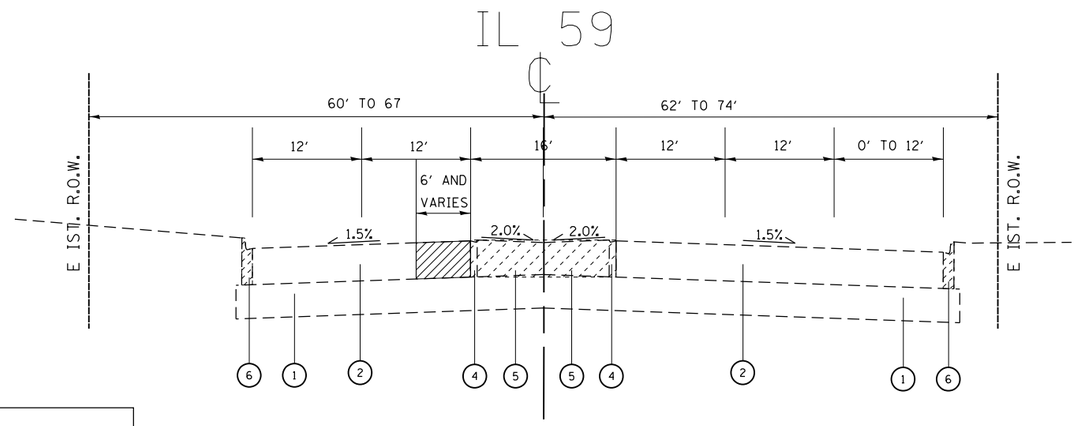

LEGEND:

MEDIAN REMOVAL
M2.12 CURB AND GUTTER REMOVAL
B6.24 CURB AND GUTTER REMOVAL

PAVEMENT REMOVAL

IL 59 (SUTTON ROAD)
E ISTIN TYPICAL SECTION
STA. 490+00 TO STA. 494+36

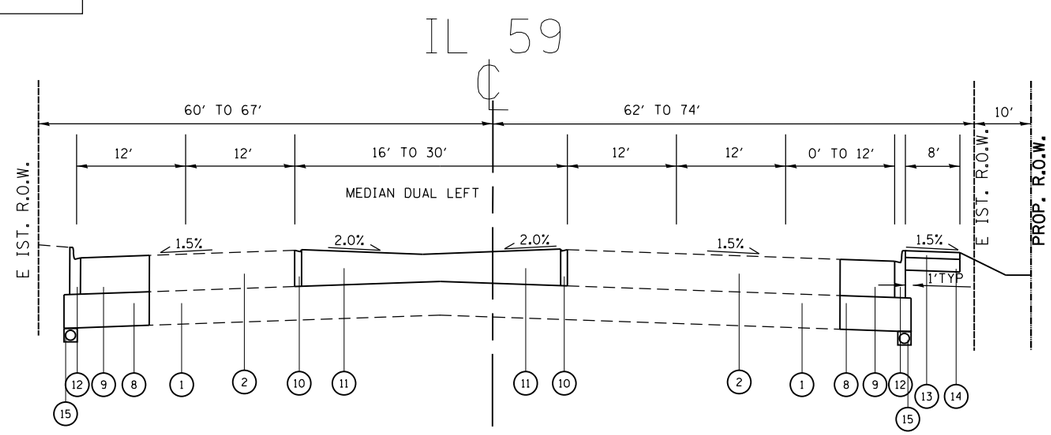

IL 59 (SUTTON ROAD)
PROPOSED TYPICAL SECTION
STA. 490+00 TO STA. 494+36

E ISTIN CONDITIONS

1. E ISTING AGGREGATE SUBGRADE 12
2. E ISTING PCC PAVEMENT JOINTED 10 1 2
3. E ISTING PCC PAVEMENT JOINTED 10
4. E ISTING M-2.12 CURB AND GUTTER
5. MOUNTABLE MEDIAN LEFT TURN LANE
6. E ISTING B-6.24 CURB AND GUTTER
7. E ISTING HMA SHOULDER 10

PROPOSED CONDITIONS

8. PROPOSED AGGREGATE SUBGRADE IMPROVEMENT 12
9. PROPOSED PCC PAVEMENT JOINTED 10

9A. PROPOSED HOT MI ASPHALT SURFACE REMOVAL VARIABLE DEPTH

10. PROPOSED COMBINATION CONCRETE CURB AND GUTTER TYPE M-2.12
11. PROPOSED STABILI ED MEDIAN SURFACE
12. PROPOSED COMBINATION CONCRETE CURB AND GUTTER TYPE B-6.24
13. PROPOSED HMA BIKE PATH HMA SURFACE COURSE MI D N50 2
14. PROPOSED AGGREGATE BASE COURSE TYPE B 6
15. PIPE UNDERDRAINS TYPE 2 4
16. PROPOSED HMA BASE COURSE 7 1 2
17. PROPOSED POLYMERI ED LEVELING BINDER MM IL-4.75 N50 3 4
18. PROPOSED POLYMERI ED HMA SURFACE COURSE MI E N70 1 3 4

HOT-MI ASPHALT MI TURE RE UIREMENTS

ITEM	MI TURE TYPE	AIR VOIDS N	UALITY MANAGEMENT PROGRAM MP
SHARED USE PATH DRIVEWAYS	HMA SURFACE COURSE MI D N50 2 IL-9.5 MM	4% 50 GYR	C A
DRIVEWAYS	HMA BASE COURSE HMA BINDER IL-19 MM PE-6 CE-8	4% 50 GYR	C A
TEMPORARY PAVEMENT	HMA BINDER COURSE IL 19.0 N70 8	4% 70 GYR	C A
	HMA SURFACE COURSE MI D N70 2 IL-9.5 MM	4% 70 GYR	C A
STABILI ED MEDIAN SURFACE	HMA BINDER COURSE IL 19.0 N70 8 1 2	4% 70 GYR	C A
	HMA SURFACE COURSE MI D N70 2 IL-9.5 MM	4% 70 GYR	C A
PAVEMENT RESURFACING	POLYMERI ED HMA SURFACE COURSE MI E N70 1 3 4 IL-9.5	4% 70 GYR.	C A
	POLYMERI ED LEVELING BINDER MM IL-4.75 N50 3 4	3.5% 50 GYR.	C A
PATCHING	CLASS D PATCHES HMA BINDER IL-19	4% 70 GYR	C A

QMP DESIGNATION: QUALITY CONTROL/QUALITY ASSURANCE (QC/QA); QUALITY CONTROL FOR PERFORMANCE (QCP); PAY FOR PERFORMANCE (PFP)

NOTES:

NOTE 1: THE UNIT WEIGHT USED TO CALCULATE ALL HMA SURFACE UANTITIES IS 112 LBS S YD IN.

NOTE 2: THE AC TYPE FOR POLYMERI ED HMA MI ES SHALL BE SBS SBR PG 76-22 AND FOR NON POLYMERI ED HMA THE AC TYPE SHALL BE PG 64-22 UNLESS MODIFIED BY DISTRICT ONE SPECIAL PROVISIONS

FOR USE OF RECYCLED MATERIALS SEE DISTRICT ONE SPECIAL PROVISIONS.

UALITY MANAGEMENT PROGRAM MP IDENTIFIES THE PARTICULAR UALITY CONTROL SPECIFICATION THAT APPLIES TO THE HMA MI TURE.

PC CONCRETE TEMPORARY PAVEMENT SHALL CONSIST OF CLASS PV CONCRETE MEETING THE RE UIREMENTS OF ART. 1020 OF THE STANDARD SPECIFICATIONS. TEMPORARY PCC PAVEMENT DOES NOT RE UIRE DOWEL BARS.

TEMPORARY PAVEMENT IS 10 THICK FOR BOTH HMA AND PCC

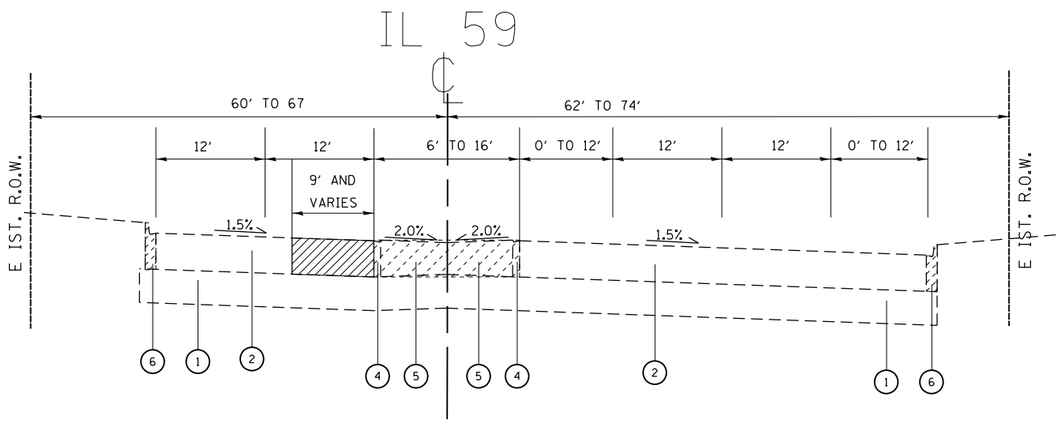

IL 59 (SUTTON ROAD)

E ISTIN TYPICAL SECTION

STA. 494+36 TO STA. 500+00

E ISTIN CONDITIONS

1. E ISTING AGGREGATE SUBGRADE 12
2. E ISTING PCC PAVEMENT JOINTED 10 1 2
3. E ISTING PCC PAVEMENT JOINTED 10
4. E ISTING M-2.12 CURB AND GUTTER
5. MOUNTABLE MEDIAN LEFT TURN LANE
6. E ISTING B-6.24 CURB AND GUTTER
7. E ISTING HMA SHOULDER 10

PROPOSED CONDITIONS

8. PROPOSED AGGREGATE SUBGRADE IMPROVEMENT 12
9. PROPOSED PCC PAVEMENT JOINTED 10
9A. PROPOSED HOT MI ASPHALT SURFACE REMOVAL VARIABLE DEPTH
10. PROPOSED COMBINATION CONCRETE CURB AND GUTTER TYPE M-2.12
11. PROPOSED STABILI ED MEDIAN SURFACE
12. PROPOSED COMBINATION CONCRETE CURB AND GUTTER TYPE B-6.24
13. PROPOSED HMA BIKE PATH HMA SURFACE COURSE MI D N50 2
14. PROPOSED AGGREGATE BASE COURSE TYPE B 6
15. PIPE UNDERDRAINS TYPE 2 4
16. PROPOSED HMA BASE COURSE 7 1 2
17. PROPOSED POLYMERI ED LEVELING BINDER MM IL-4.75 N50 3 4
18. PROPOSED POLYMERI ED HMA SURFACE COURSE MI E N70 1 3 4

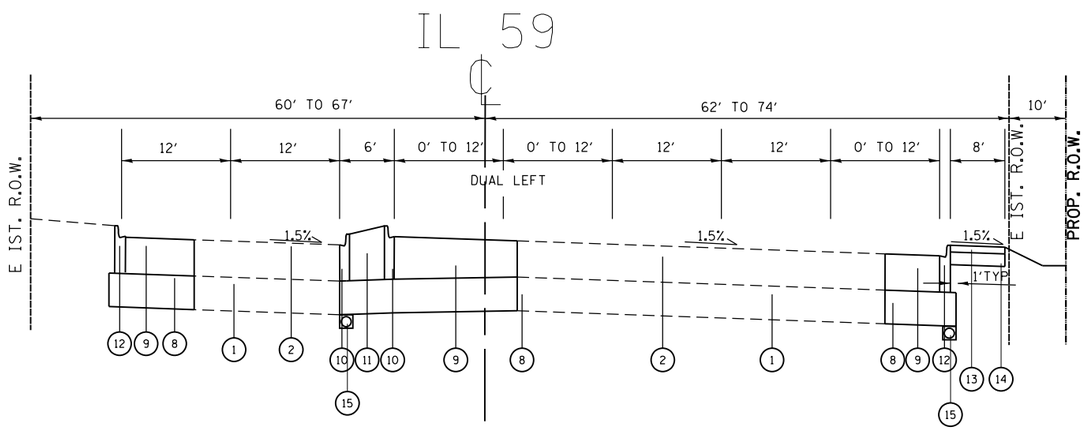

IL 59 (SUTTON ROAD)

PROPOSED TYPICAL SECTION

STA. 494+36 TO STA. 500+00

LEGEND:

- MEDIAN REMOVAL
  M2.12 CURB AND GUTTER REMOVAL
  B6.24 CURB AND GUTTER REMOVAL
- PAVEMENT REMOVAL

FILE NAME = pw:\\planroom.dot.illinois.govPWIDOT\Documents\IDOT Offices\District 1\Projects\P105014\DRAWINGS\Design\P105014-sht-typical.dgn	USER NAME = kalorm	DESIGNED -	REVISED -
		DRAWN -	REVISED -
	PLOT SCALE = 100.0000 ' / in.	CHECKED -	REVISED -
Default	PLOT DATE = 3/21/2019	DATE -	REVISED -

STATE OF ILLINOIS
DEPARTMENT OF TRANSPORTATION

ILLINOIS ROUTE 59 (SUTTON ROAD) AT ARMY TRAIL ROAD
E ISTIN AND PROPOSED TYPICAL SECTIONS

SCALE: NONE | SHEET 1 OF 1 SHEETS | STA. TO STA.

F.A.P. RTE.	SECTION	COUNTY	TOTAL SHEETS	SHEET NO.
338	11OTS-N	D PAGE	133	13

CONTRACT NO. 62F19

ILLINOIS FED. AID PROJECT

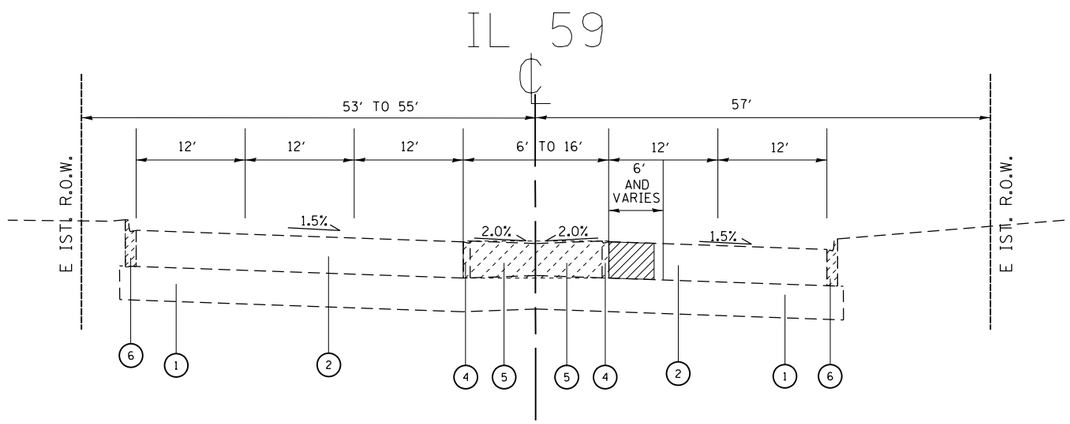

IL 59 (SUTTON ROAD)

E ISTIN TYPICAL SECTION

STA. 500+00 TO STA. 505+97

E ISTIN CONDITIONS

1. E ISTING AGGREGATE SUBGRADE 12
2. E ISTING PCC PAVEMENT JOINTED 10
3. E ISTING PCC PAVEMENT JOINTED 10
4. E ISTING M-2.12 CURB AND GUTTER
5. MOUNTABLE MEDIAN LEFT TURN LANE
6. E ISTING B-6.24 CURB AND GUTTER
7. E ISTING HMA SHOULDER 10

PROPOSED CONDITIONS

8. PROPOSED AGGREGATE SUBGRADE IMPROVEMENT 12
9. PROPOSED PCC PAVEMENT JOINTED 10

9A. PROPOSED HOT MI ASPHALT SURFACE REMOVAL VARIABLE DEPTH

10. PROPOSED COMBINATION CONCRETE CURB AND GUTTER TYPE M-2.12
11. PROPOSED STABILI ED MEDIAN SURFACE
12. PROPOSED COMBINATION CONCRETE CURB AND GUTTER TYPE B-6.24
13. PROPOSED HMA BIKE PATH HMA SURFACE COURSE MI D N50 2
14. PROPOSED AGGREGATE BASE COURSE TYPE B 6
15. PIPE UNDERDRAINS TYPE 2 4
16. PROPOSED HMA BASE COURSE 7 1 2
17. PROPOSED POLYMERI ED LEVELING BINDER MM IL-4.75 N50 3 4
18. PROPOSED POLYMERI ED HMA SURFACE COURSE MI E N70 1 3 4

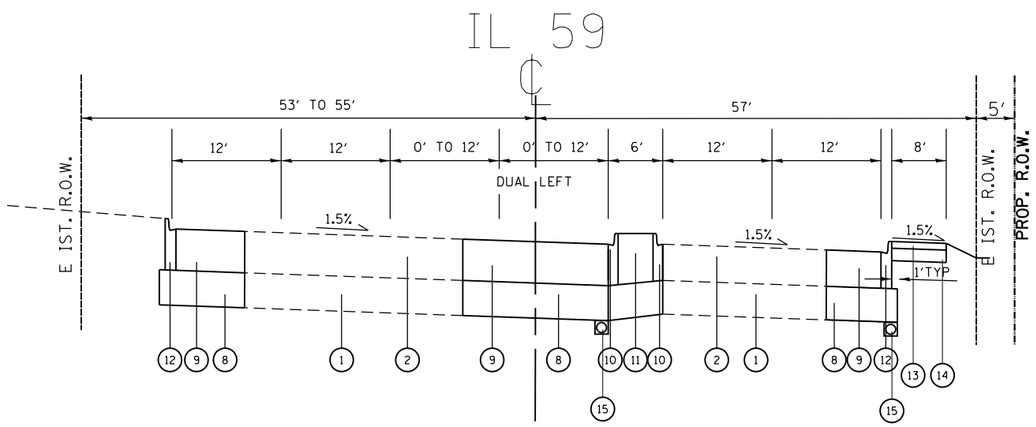

IL 59 (SUTTON ROAD)

PROPOSED TYPICAL SECTION

STA. 500+00 TO STA. 505+97

LEGEND:

- MEDIAN REMOVAL
  M2.12 CURB AND GUTTER REMOVAL
  B6.24 CURB AND GUTTER REMOVAL
- PAVEMENT REMOVAL

FILE NAME = pw:\\planroom.dot.illinois.gov:PWIDOT\Documents\IDOT Offices\District 1\Projects\P105014\DRAWINGS\Design\P105014-sht-typical.dgn	USER NAME = kalorm	DESIGNED -	REVISED -
		DRAWN -	REVISED -
	PLOT SCALE = 100.0000 ' / in.	CHECKED -	REVISED -
Default	PLOT DATE = 3/21/2019	DATE -	REVISED -

STATE OF ILLINOIS
DEPARTMENT OF TRANSPORTATION

ILLINOIS ROUTE 59 (SUTTON ROAD) AT ARMY TRAIL ROAD
E ISTIN AND PROPOSED TYPICAL SECTIONS

SCALE: NONE | SHEET 1 OF 1 SHEETS | STA. TO STA.

F.A.P. RTE.	SECTION	COUNTY	TOTAL SHEETS	SHEET NO.
338	11OTS-N	D PAGE	133	14

CONTRACT NO. 62F19

ILLINOIS FED. AID PROJECT

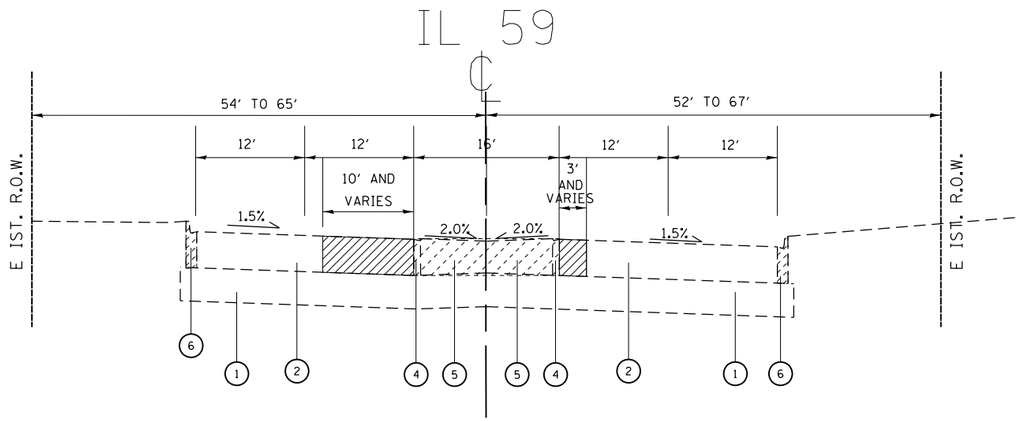

IL 59 (SUTTON ROAD)

E ISTIN TYPICAL SECTION

STA. 505+97 TO STA. 511+00

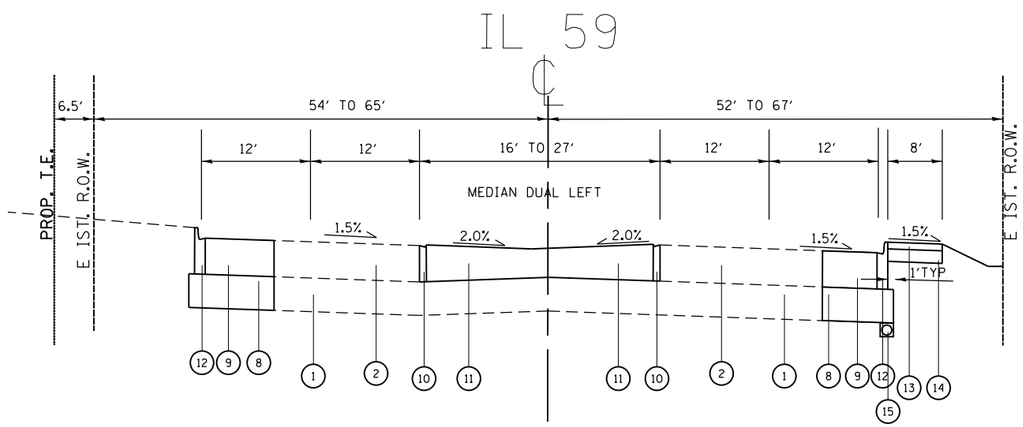

IL 59 (SUTTON ROAD)

PROPOSED TYPICAL SECTION

STA. 505+97 TO STA. 511+00

E ISTIN CONDITIONS

1. E ISTING AGGREGATE SUBGRADE 12
2. E ISTING PCC PAVEMENT JOINTED 10
3. E ISTING PCC PAVEMENT JOINTED 10
4. E ISTING M-2.12 CURB AND GUTTER
5. MOUNTABLE MEDIAN LEFT TURN LANE
6. E ISTING B-6.24 CURB AND GUTTER
7. E ISTING HMA SHOULDER 10

PROPOSED CONDITIONS

8. PROPOSED AGGREGATE SUBGRADE IMPROVEMENT 12
9. PROPOSED PCC PAVEMENT JOINTED 10

9A. PROPOSED HOT MI ASPHALT SURFACE REMOVAL VARIABLE DEPTH

10. PROPOSED COMBINATION CONCRETE CURB AND GUTTER TYPE M-2.12
11. PROPOSED STABILI ED MEDIAN SURFACE
12. PROPOSED COMBINATION CONCRETE CURB AND GUTTER TYPE B-6.24
13. PROPOSED HMA BIKE PATH HMA SURFACE COURSE MI D N50 2
14. PROPOSED AGGREGATE BASE COURSE TYPE B 6
15. PIPE UNDERDRAINS TYPE 2 4
16. PROPOSED HMA BASE COURSE 7 1 2
17. PROPOSED POLYMERI ED LEVELING BINDER MM IL-4.75 N50 3 4
18. PROPOSED POLYMERI ED HMA SURFACE COURSE MI E N70 1 3 4

LEGEND:

MEDIAN REMOVAL
M2.12 CURB AND GUTTER REMOVAL
B6.24 CURB AND GUTTER REMOVAL

PAVEMENT REMOVAL

FILE NAME = pw:\\planroom.dot.illinois.govPWIDOT\Documents\IDOT Offices\District 1\Projects\P105014\Drawings\Design\P105014-sht-typical.dgn	USER NAME = kalorm	DESIGNED -	REVISED -
		DRAWN -	REVISED -
	PLOT SCALE = 100.0000 ' / in.	CHECKED -	REVISED -
Default	PLOT DATE = 3/21/2019	DATE -	REVISED -

STATE OF ILLINOIS
DEPARTMENT OF TRANSPORTATION

ILLINOIS ROUTE 59 (SUTTON ROAD) AT ARMY TRAIL ROAD
E ISTIN AND PROPOSED TYPICAL SECTIONS

SCALE: NONE | SHEET 1 OF 1 SHEETS | STA. TO STA.

F.A.P. RTE.	SECTION	COUNTY	TOTAL SHEETS	SHEET NO.
338	11OTS-N	D PAGE	133	15

CONTRACT NO. 62F19

ILLINOIS FED. AID PROJECT

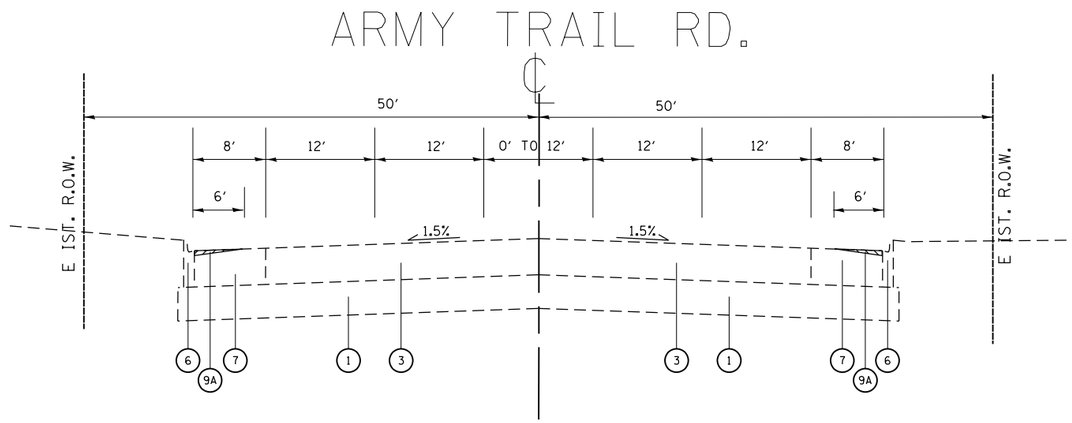

ARMY TRAIL ROAD

E ISTIN TYPICAL SECTION

STA. 194+34 TO STA. 198+98.5

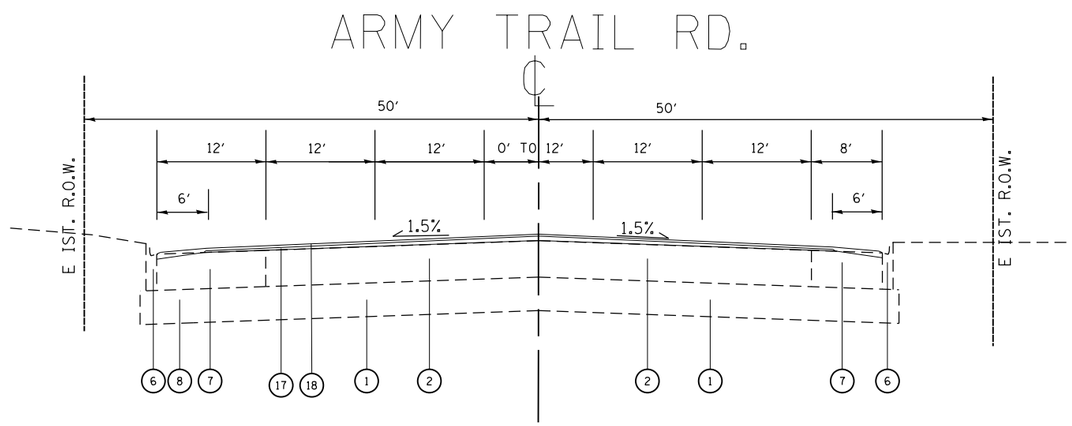

ARMY TRAIL ROAD

PROPOSED TYPICAL SECTION

STA. 194+34 TO STA. 198+98.5

E ISTIN CONDITIONS

1. E ISTING AGGREGATE SUBGRADE 12
2. E ISTING PCC PAVEMENT JOINTED 10
3. E ISTING PCC PAVEMENT JOINTED 10
4. E ISTING M-2.12 CURB AND GUTTER
5. MOUNTABLE MEDIAN LEFT TURN LANE
6. E ISTING B-6.24 CURB AND GUTTER
7. E ISTING HMA SHOULDER 10

PROPOSED CONDITIONS

8. PROPOSED AGGREGATE SUBGRADE IMPROVEMENT 12
9. PROPOSED PCC PAVEMENT JOINTED 10
9A. PROPOSED HOT MI ASPHALT SURFACE REMOVAL VARIABLE DEPTH
10. PROPOSED COMBINATION CONCRETE CURB AND GUTTER TYPE M-2.12
11. PROPOSED STABILI ED MEDIAN SURFACE
12. PROPOSED COMBINATION CONCRETE CURB AND GUTTER TYPE B-6.24
13. PROPOSED HMA BIKE PATH HMA SURFACE COURSE MI D N50 2
14. PROPOSED AGGREGATE BASE COURSE TYPE B 6
15. PIPE UNDERDRAINS TYPE 2 4
16. PROPOSED HMA BASE COURSE 7 1 2
17. PROPOSED POLYMERI ED LEVELING BINDER MM IL-4.75 N50 3 4
18. PROPOSED POLYMERI ED HMA SURFACE COURSE MI E N70 1 3 4

LEGEND:

MEDIAN REMOVAL
M2.12 CURB AND GUTTER REMOVAL
B6.24 CURB AND GUTTER REMOVAL

PAVEMENT REMOVAL

FILE NAME = pw:\\planroom.dot.illinois.govPWIDOT\Documents\IDOT Offices\District 1\Projects\P105014\Drawings\Design\P105014-sht-typical.dgn	USER NAME = kalorm	DESIGNED -	REVISED -
		DRAWN -	REVISED -
	PLOT SCALE = 100.0000 ′ / in.	CHECKED -	REVISED -
Default	PLOT DATE = 3/21/2019	DATE -	REVISED -

STATE OF ILLINOIS
DEPARTMENT OF TRANSPORTATION

ILLINOIS ROUTE 59 (SUTTON ROAD) AT ARMY TRAIL ROAD
E ISTIN AND PROPOSED TYPICAL SECTIONS

SCALE: NONE | SHEET 1 OF 1 SHEETS | STA. TO STA.

F.A.P. RTE.	SECTION	COUNTY	TOTAL SHEETS	SHEET NO.
338	11OTS-N	D PAGE	133	16

CONTRACT NO. 62F19

ILLINOIS FED. AID PROJECT

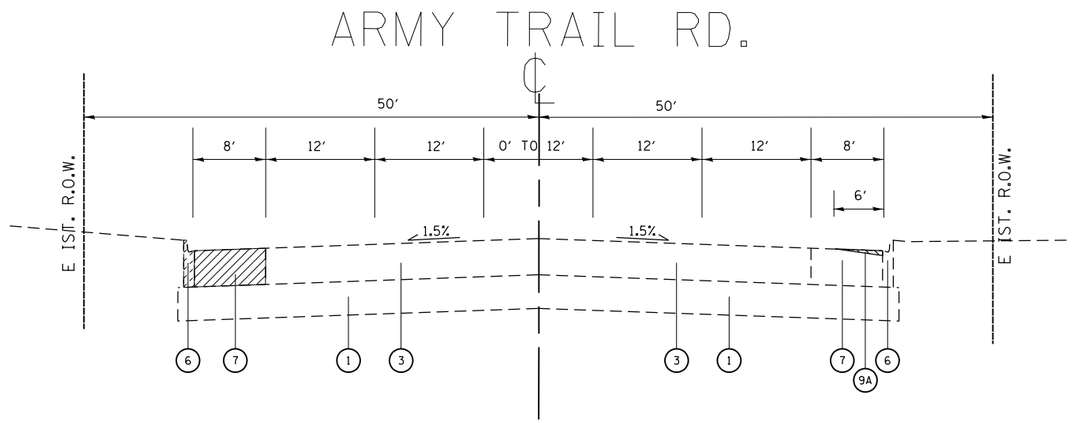

ARMY TRAIL ROAD

E ISTIN TYPICAL SECTION

STA. 201+28.8 TO STA. 205+38

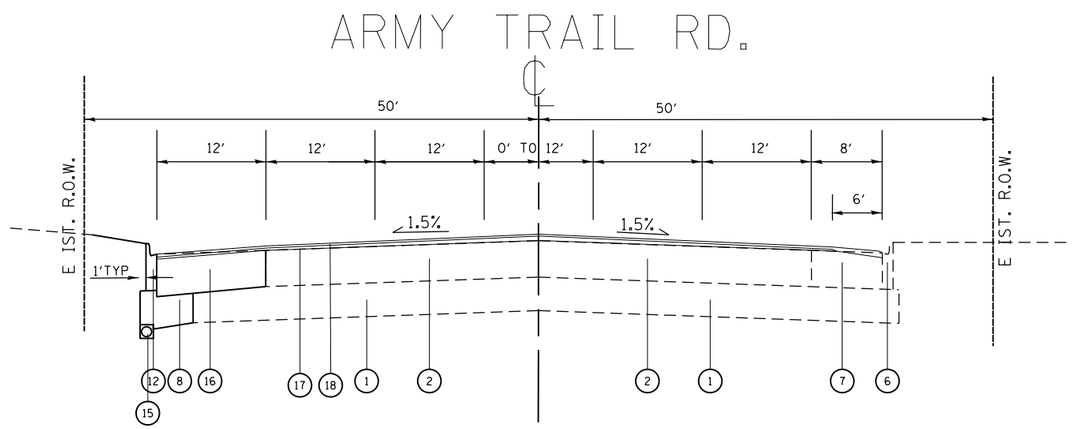

ARMY TRAIL ROAD

PROPOSED TYPICAL SECTION

STA. 201+28.8 TO STA. 205+38

E ISTIN CONDITIONS

1. E ISTING AGGREGATE SUBGRADE 12
2. E ISTING PCC PAVEMENT JOINTED 10
3. E ISTING PCC PAVEMENT JOINTED 10
4. E ISTING M-2.12 CURB AND GUTTER
5. MOUNTABLE MEDIAN LEFT TURN LANE
6. E ISTING B-6.24 CURB AND GUTTER
7. E ISTING HMA SHOULDER 10

PROPOSED CONDITIONS

8. PROPOSED AGGREGATE SUBGRADE IMPROVEMENT 12
9. PROPOSED PCC PAVEMENT JOINTED 10

9A. PROPOSED HOT MI ASPHALT SURFACE REMOVAL VARIABLE DEPTH

10. PROPOSED COMBINATION CONCRETE CURB AND GUTTER TYPE M-2.12
11. PROPOSED STABILI ED MEDIAN SURFACE
12. PROPOSED COMBINATION CONCRETE CURB AND GUTTER TYPE B-6.24
13. PROPOSED HMA BIKE PATH HMA SURFACE COURSE MI D N50 2
14. PROPOSED AGGREGATE BASE COURSE TYPE B 6
15. PIPE UNDERDRAINS TYPE 2 4
16. PROPOSED HMA BASE COURSE 7 1 2
17. PROPOSED POLYMERI ED LEVELING BINDER MM IL-4.75 N50 3 4
18. PROPOSED POLYMERI ED HMA SURFACE COURSE MI E N70 1 3 4

LEGEND:

MEDIAN REMOVAL
M2.12 CURB AND GUTTER REMOVAL
B6.24 CURB AND GUTTER REMOVAL

PAVEMENT REMOVAL

FILE NAME = pw:\\planroom.dot.illinois.govPWIDOT\Documents\IDOT Offices\District 1\Projects\P105014\Drawings\Design\P105014-sht-typical.dgn	USER NAME = kalorm	DESIGNED -	REVISED -	STATE OF ILLINOIS DEPARTMENT OF TRANSPORTATION	ILLINOIS ROUTE 59 (SUTTON ROAD) AT ARMY TRAIL ROAD E ISTIN AND PROPOSED TYPICAL SECTIONS	F.A.P. RTE.	SECTION	COUNTY	TOTAL SHEETS	SHEET NO.
		DRAWN -	REVISED -			338	11OTS-N	D PAGE	133	17
	PLOT SCALE = 100.0000 ′ / in.	CHECKED -	REVISED -					CONTRACT NO. 62F19		
Default	PLOT DATE = 3/21/2019	DATE -	REVISED -		SCALE: NONE SHEET 1 OF 1 SHEETS STA. TO STA.		ILLINOIS FED. AID PROJECT			

EARTHWORK SCHEDULE

1	2		4		5		6		7		8		9	
IL 59 AT ARMY TRAIL ROAD	CUT EARTH EXCAVATION (CU YD)		FILL EMBANKMENT . (CU YD)		ADJUSTMENT FOR SHRINKAGE (CU YD)		EARTHWORK BALANCE WASTE (+) SHORTAGE (-) (CU YD)		TOPSOIL EXCAVATION (EXISTING TOPSOIL) (DEPTH = 8") (CU YD)		TOPSOIL PLACEMENT (EXISTING TOPSOIL) (DEPTH = 6") (CU YD)		TOPSOIL BALANCE WASTE (+) OR SHORTAGE (-) (CU YD)	
	LEFT OFFSET	RIGHT OFFSET	LEFT OFFSET	RIGHT OFFSET	LEFT OFFSET	RIGHT OFFSET	LEFT OFFSET	RIGHT OFFSET	LEFT OFFSET	RIGHT OFFSET	LEFT OFFSET	RIGHT OFFSET	LEFT OFFSET	RIGHT OFFSET
IL 59 (STA 490+00 TO STA 516+40.8)	2383	5374	1559	3065	2025.55	4567.9	466.55	1502.9	-	-	-	-	-	-
Army Trail Rd. (STA 195+11.5 TO STA 209+50)	26	232	0	41	22.1	197.2	-18.9	156.2	-	-	-	-	-	-
TOTAL	**2409**	**5606**	**1559**	**3106**	**2047.65**	**4765.1**	**447.65**	**1659.1**						
	8015						**2106.75**		**1227**		**1022**		**205**	

NOTES:

COLUMN 1: LOCATION FROM PLANS

COLUMN 2: CUT UANTITIES FROM CROSS SECTIONS WHICH DOES NOT INCLUDE UNSUITABLE MATERIAL

COLUMN 3: UANTITIES FROM CROSS SECTIONS FILL

COLUMN 4: EARTH E CAVATION THAT IS TO BE USED AS FILL MATERIAL IN THE EMBANKMENT SHRINKAGE FACTOR WAS DETERMINED TO BE 15%

COLUMN 5: COLUMN 5 - COLUMN 4 POSITIVE UANTITY E TRA E CAVATION NEGATIVE UANTITY FURNISHED E CAVATION NEEDED

COLUMN 6: UANITIES OF E ISTING TOPSOIL TO BE PAID FOR AS TOPSOIL E CAVATION AND PLACEMENT .

COLUMN 7: UANITIES OF TOPSOIL NEEDED FOR LANDSCAPING AREAR OF SEEDING

COLUMN 8: TOPSOIL RE UIRED COLUMN 6 - COLUMN 7
+ UANTITIES OF TOPSOIL TO BE WASTED
- UANTITIES OF FURNISHED TOPSOIL NEEDED

ROAD	EXISTING SIGNS		PROPOSED SIGNS		SIGN DESCRIPTION	MUTCD CODE	HEIGHT	WIDTH	AREA	PANEL TYPE	PROPOSED ACTION	REMOVE SIGN PANEL ASSY TYP A	TELESCOPING STEEL SIGN SUP.	SIGN PANEL TYPE 1
	STATION	OFFSET	STATION	OFFSET								72400100	72800100	72000100
							FT	FT	SQ FT			EACH	FT	SQFT
IL 59	494+00	LT			BARTLETT FIRE DEPARTMENT (2)		Various	Various		1	RELOCATE SIGN	1	0.00	
COMM. DRWY. ENT.	495+62	RT			NO LEFT TURN	R3-2	3.00	3.00	9.00	1	REMOVE & PLACE NEW SIGN	1	15.00	9.0
COMM. DRWY. EXIT	495+96	RT			STOP SIGN	R1-1	3.00	3.00	9.00	1	REMOVE & PLACE NEW SIGN	1	15.00	9.0
COMM. DRWY. EXIT			496+00	RT	RIGHT ONLY	R3-5R	3.00	2.50	7.50	1	NEW SIGN		15.00	7.5
	496+00	RT			DO NOT ENTER SIGN	R5-1	3.00	3.00	9.00	1	REMOVE & PLACE NEW SIGN	1		9.0
IL 59			496+63	RT	DOUBLE LEFT TURN ONLY	R3-8	3.00	3.00	9.00	1	NEW SIGN		15.00	9.0
IL 59	496+70	LT			SPEED LIMIT 45	R2-1	3.00	3.00	9.00	1	REMOVE & PLACE NEW SIGN	1	15.00	9.0
IL 59	498+23	RT			RIGHT ONLY	R3-5R	3.00	2.50	7.50	1	REMOVE & PLACE NEW SIGN	1	15.00	7.5
IL 59	498+25	LT			STATE ROUTE SIGN	M1-I100.2	2.00	2.00	4.00	1	REMOVE & PLACE NEW SIGN	1	14.00	4.0
	498+25	LT			CARDINAL DIRECTION	M3-1	2.00	1.00	2.00	1	REMOVE & PLACE NEW SIGN	1		2.0
IL 59	498+31	LT			ADOPT A HIGHWAY	I-I107b	3.00	2.50	7.50	1	RELOCATE SIGN	1	15.00	7.5
IL 59			499+21	LT	KEEP RIGHT	R4-7	2.00	2.50	5.00	1	NEW SIGN		14.00	5.0
IL 59 (SE TRAFFIC SIGNAL)	499+23	RT			SHARE THE DRIVE		Various	Various		1	RELOCATE SIGN	1	0.00	0.0
IL 59			499+37	RT	PEDESTRIAN SIGNS AND PLAQUES	R10-3	0.75	1.00	0.75	1	PLACE NEW SIGN	1	12.75	0.8
IL 59 (SW TRAFFIC SIGNAL)	499+62	LT			B.A.P.S TEMPLE		Various	Various			RELOCATE SIGN	1	0.00	0.0
IL 59 (SW TRAFFIC SIGNAL)	499+62	LT			PRAMUKH SWAMI ROAD		Various	Various			RELOCATE SIGN	1	0.00	0.0
IL 59 (SW TRAFFIC SIGNAL MAST ARM)	499+62	LT			LEFT ON GREEN ARROW ONLY	R10-5	2.50	3.00	7.50	1	NEW SIGN		0.00	1.1
IL 59 (NE TRAFFIC SIGNAL)	500+40	RT			GOOD SHEPHERD METHODIST CHURCH		Various	Various			RELOCATE SIGN	1	0.00	
IL 59 (NE TRAFFIC SIGNAL MAST ARM)	500+40	RT			LEFT ON GREEN ARROW ONLY	R10-5	2.50	3.00	7.50	1	NEW SIGN		0.00	1.1
IL 59 (NE TRAFFIC SIGNAL)			500+78	RT	BICYCLE/PEDESTRIAN	W11-15	3.00	3.00	9.00	1	NEW SIGN		0.00	9.0
			500+78	RT	ARROW	M6-2A	1.75	1.25	2.19	1	NEW SIGN			2.2
IL 59			500+40	RT	PEDESTRIAN SIGNS AND PLAQUES	R10-3b	0.75	1.00	0.75	1	NEW SIGN		12.75	0.8
IL 59			500+68	RT	KEEP RIGHT	R4-7	2.00	2.50	5.00	1	NEW SIGN		14.00	5.0
IL 59 (NW TRAFFIC SIGNAL)	500+73	LT			RESURRECTION CATHOLIC		Various	Various			RELOCATE SIGN	1	0.00	
IL 59 (NW TRAFFIC SIGNAL)	500+73	LT			LITTLE HOME CHURCH		Various	Various			RELOCATE SIGN	1	0.00	
IL 59	501+56	RT			ADOPT A HIGHWAY	I-I107b	3.00	2.50	7.50	1	RELOCATE SIGN	1	15.00	7.5
IL 59	501+88	RT			CARDINAL DIRECTION	M1-I100.2	2.00	2.00	4.00	1	RELOCATE SIGN	1	14.00	4.0
	501+88	RT			STATE ROUTE SIGN	M3-1	2.00	1.00	2.00	1	RELOCATE SIGN	1		2.0
IL 59	502+58	RT			SPEED LIMIT 45	R2-1	3.00	3.00	9.00	1	REMOVE & PLACE NEW SIGN	1	15.00	9.0
IL 59	502+61	LT			BARTLETT FIRE DEPARTMENT		Various	Various		1	RELOCATE SIGN	1	0.00	
COMM. DRWY. ENT.	503+23	RT			NO LEFT TURN	R3-2	3.00	3.00	9.00	1	REMOVE & PLACE NEW SIGN	1	15.00	9.0
COMM. DRWY. ENT.	503+51	RT			STOP SIGN	R1-1	2.50	3.00	7.50	1	REMOVE & PLACE NEW SIGN	1	14.50	7.5
IL 59			503+60	LT	DOUBLE LEFT TURN ONLY	R3-8	3.00	3.00	9.00	1	NEW SIGN		15.00	9.0
IL 59	509+95	RT			ADVANCED TRAFFIC CONTROL	W3-3	2.50	2.50	6.25	1	REMOVE & PLACE NEW SIGN	1	14.50	6.3
IL 59	509+95	RT			ROAD CONDITION	W8-5aP	2.00	1.50	3.00	1	REMOVE & PLACE NEW SIGN	1	14.00	3.0
IL 59	510+00	RT			ADVANCED STREET NAME (Schick Rd.)	W16-8	1.50	4.50	6.75	1	REMOVE & PLACE NEW SIGN	1	13.50	6.8
ARMY TRAIL RD.	199+22	LT			COUNTY ROUTE SIGN	M1-6	2.00	2.00	4.00	1	REMOVE & PLACE NEW SIGN	1	14.00	4.0
ARMY TRAIL RD.	199+22	LT			TYPE 3 OBJECT MARKER	OM3-R	3.00	1.00	3.00	1	REMOVE & PLACE NEW SIGN	1	15.00	3.0
ARMY TRAIL RD. (NW TRAFFIC SIGNAL)	199+14	LT			NO TRUCKS	R5-2	2.00	2.00	4.00		REMOVE & PLACE NEW SIGN	1	0.00	4.0
ARMY TRAIL RD. (NW TRAFFIC SIGNAL)	199+14	LT			TRUCK TONNAGE LIMIT		2.00	2.00	4.00		RELOCATE SIGN	1	0.00	4.0
ARMY TRAIL RD. (SW TRAFFIC SIGNAL)	199+34	RT			DO NOT DRIVE ON SHOULDER	R4-17	2.00	2.50	5.00	1	REMOVE & PLACE NEW SIGN	1	0.00	5.0
ARMY TRAIL RD. (NE TRAFFIC SIGNAL)	200+61	LT			RIGHT ONLY	R3-5R	3.00	2.50	7.50	1	NEW SIGN		0.00	7.5
ARMY TRAIL RD. (SE TRAFFIC SIGNAL)	200+77	RT			COUNTY ROUTE SIGN	M1-6	2.00	2.00	4.00	1	REMOVE & PLACE NEW SIGN	1	0.00	4.0
ARMY TRAIL RD. (SE TRAFFIC SIGNAL)	200+77	RT			B.A.P.S TEMPLE		Various	Various			RELOCATE SIGN	1	0.00	
ARMY TRAIL RD. (SE TRAFFIC SIGNAL)			200+77	RT	BICYCLE/PEDESTRIAN	W11-15	3.00	3.00	9.00	1	NEW SIGN		0.00	9.0
			200+77	RT	ARROW	M6-2A	1.75	1.25	2.19	1	NEW SIGN		0.00	2.2
ARMY TRAIL RD.	202+34	LT			DO NOT BLOCK DRIVEWAY	R10-7	2.00	2.50	5.00	1	REMOVE & PLACE NEW SIGN	1	14.00	5.0
COMM. DRWY. ENT.	202+78	LT			STOP SIGN	R1-1	3.00	3.00	9.00	1	REMOVE & PLACE NEW SIGN	1	15.00	9.0
COMM. DRWY. ENT.	203+10	RT			NO LEFT TURN	R3-2	3.00	3.00	9.00	1	REMOVE & PLACE NEW SIGN	1	15.00	9.0
COMM. DRWY. ENT.	203+47	LT			DO NOT BLOCK DRIVEWAY	R4-17	2.00	2.50	5.00	1	REMOVE & PLACE NEW SIGN	1	14.00	5.0
TOTAL												37	390.0	233.1

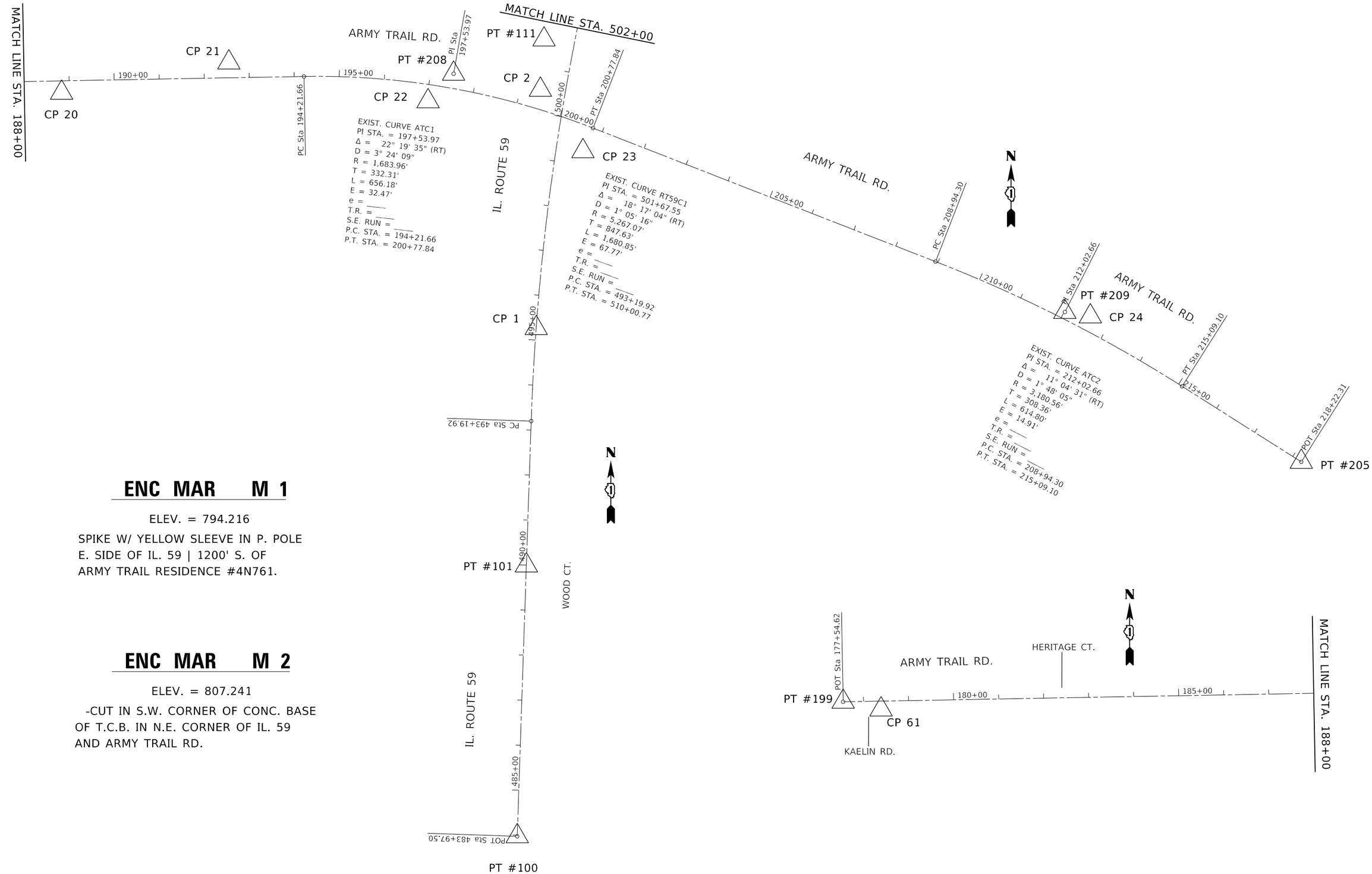

ENC MAR M 1

ELEV. = 794.216

SPIKE W/ YELLOW SLEEVE IN P. POLE
E. SIDE OF IL. 59 | 1200' S. OF
ARMY TRAIL RESIDENCE #4N761.

ENC MAR M 2

ELEV. = 807.241

-CUT IN S.W. CORNER OF CONC. BASE
OF T.C.B. IN N.E. CORNER OF IL. 59
AND ARMY TRAIL RD.

MODEL: Default
FILE NAME: pw:\\illanroom.dot.illinois.gov:PWIDOT\Documents\IDOT Offices\District 1\Projects\P105014\CADData\CAD sheets\P105014-sht-ATR.dgn

USER NAME = kalorm	DESIGNED -	REVISED -
	DRAWN -	REVISED -
PLOT SCALE = 200.0000 ' / in.	CHECKED -	REVISED -
PLOT DATE = 3/21/2019	DATE -	REVISED -

STATE OF ILLINOIS
DEPARTMENT OF TRANSPORTATION

ALIGNMENT, TIES, AND BENCHMARKS
IL. ROUTE 59 (SUTTON ROAD) AT ARMY TRAIL ROAD

SCALE: NONE | SHEET OF SHEETS | STA. TO STA.

F.A.P. RTE.	SECTION	COUNTY	TOTAL SHEETS	SHEET NO.
338	110TS-N	DUPAGE	133	20
		CONTRACT NO. 62F19		
		ILLINOIS	FED. AID PROJECT	

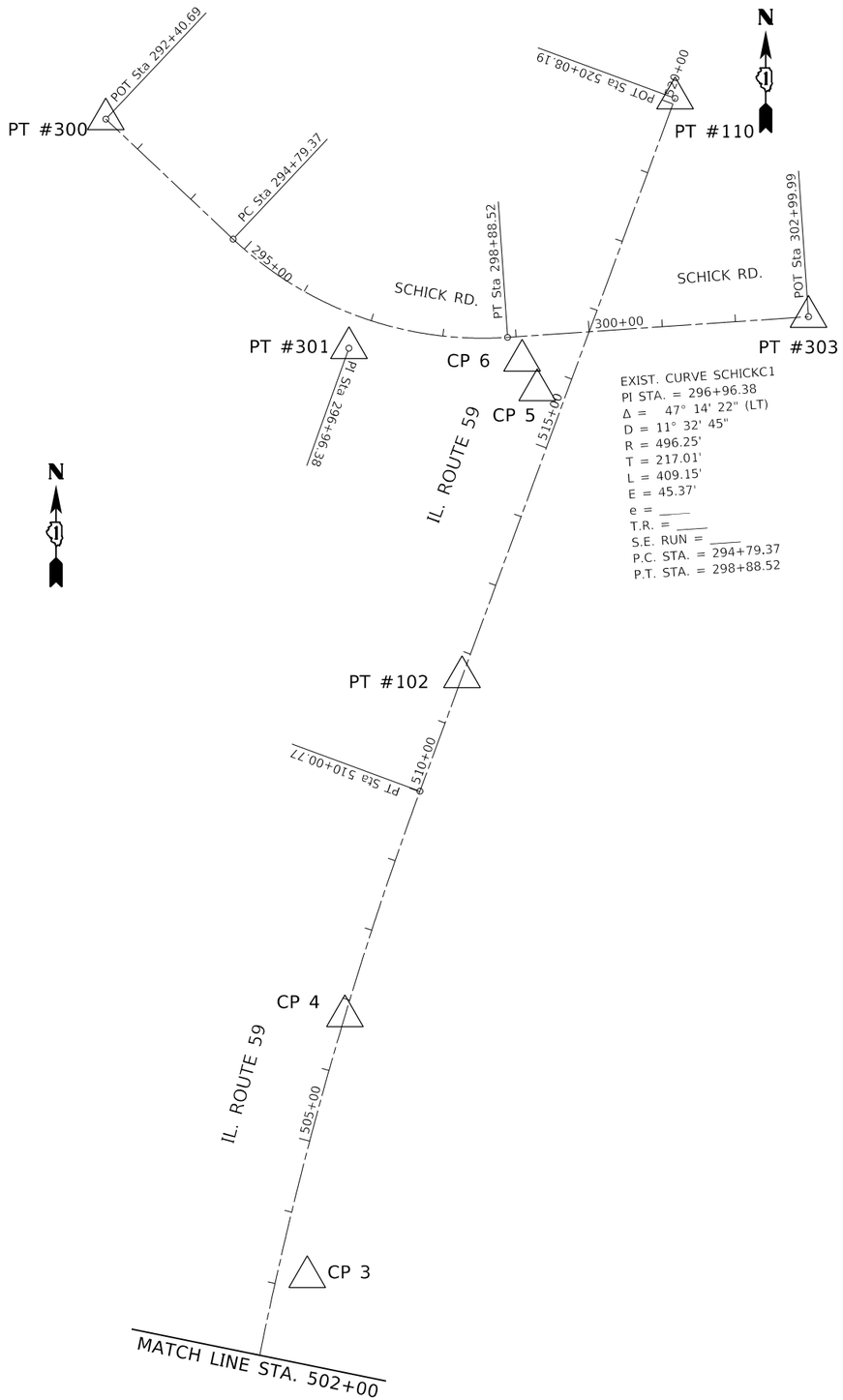

ROUTE	POINT	NORTHING	EASTING	STATION
IL. RTE. 59 HARLEM AVE.	100	1921627.2217	1018232.7470	483+97.50
	101	1922228.4513	1018252.9709	489+99.07
	102	1924347.4264	1018642.4195	511+66.70
	110	1925137.1035	1018933.1372	520+08.19
	111	1923396.2697	1018292.2535	501+67.55
ARMY TRAIL ROAD	199	1923284.1494	1016092.3507	177+54.62
	205	1922458.6384	1019974.0951	218+22.31
	208	1923320.3761	1018091.3710	197+53.97
	209	1922791.3576	1019449.0708	212+02.66
SCHICK ROAD	300	1925108.7356	1018156.6148	292+40.69
	301	1924796.1330	1018488.1722	296+96.38
	303	1924839.1519	1019115.1795	302+99.99

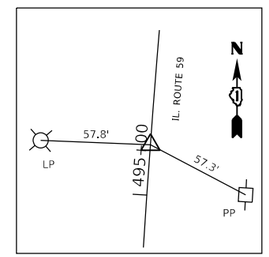

CONTROL POINT 1

MAG NAIL IN MEDIAN
IL 59 (SOUTH)
STA. 495+26.65 0.1R
N=1922755.5414
E=1018274.8520
ELEV.=798.7720

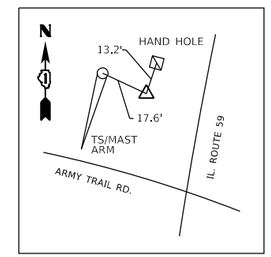

CONTROL POINT 2

MAG NAIL N.W. CORNER
STA. 500+50.31 55.43L
N=1923284.6349
E=1018284.1711
ELEV.=804.8499

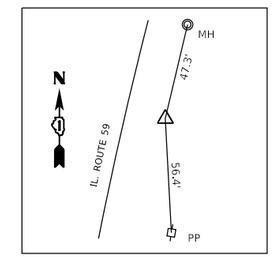

CONTROL POINT 3

"X" IN TOP OF CURB
STA. 503+18.43 40.89R
N=1923528.8749
E=1018431.3158
ELEV.=807.2930

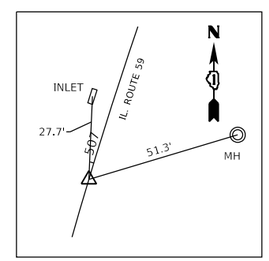

CONTROL POINT 4

MAG NAIL IN MEDIAN
IL 59 (NORTH)
STA. 506+77.35 0.04R
N=1923884.9564
E=1018482.7776
ELEV.=801.3370

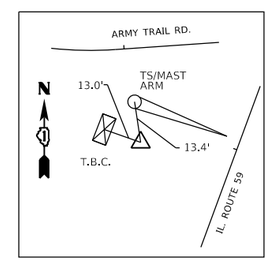

CONTROL POINT 5

"X" IN CORNER OF
HANDHOLE
STA. 515+69.59 39.10L
N=1924739.0170
E=1018744.9199
ELEV.=805.1690

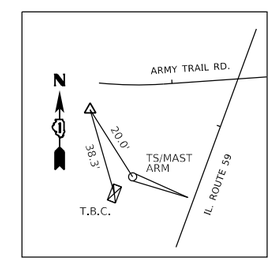

CONTROL POINT 6

MAG NAIL IN BIKE PATH
STA. 516+00.37 72.08L
N=1924779.2890
E=1018724.6000
ELEV.=804.3600

MODEL: Default
FILE NAME: pw:\\ulanroom.dot.illinois.gov:PWIDOT\Documents\IDOT Offices\District 1\Projects\P105014\CADData\CADsheets\P105014-sht-ATB.dgn

USER NAME = kalorm	DESIGNED -	REVISED -	
	DRAWN -	REVISED -	
PLOT SCALE = 200.0000 ' / in.	CHECKED -	REVISED -	
PLOT DATE = 3/21/2019	DATE -	REVISED -	

STATE OF ILLINOIS
DEPARTMENT OF TRANSPORTATION

ALIGNMENT, TIES, AND BENCHMARKS
IL. ROUTE 59 (SUTTON ROAD) AT ARMY TRAIL ROAD

SCALE: NONE | SHEET OF SHEETS | STA. TO STA.

F.A.P. RTE.	SECTION	COUNTY	TOTAL SHEETS	SHEET NO.
338	110TS-N	DUPAGE	133	21
		CONTRACT NO. 62F19		
		ILLINOIS	FED. AID PROJECT	

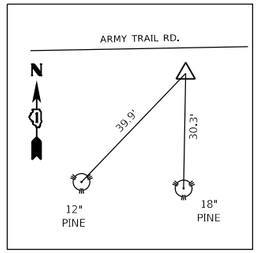

CONTROL POINT 20

MAG NAIL IN S. SHOULDER
ARMY TRAIL (WEST)
STA. 188+82.87 26.52R
N=1923278.0793
E=1017220.8936
ELEV.=793.7450

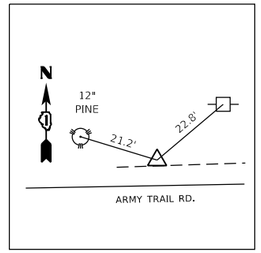

CONTROL POINT 21

MAG NAIL IN N. SHOULDER
ARMY TRAIL
STA. 192+55.46 33.86L
N=1923345.1951
E=1017592.3319
ELEV.=804.1950

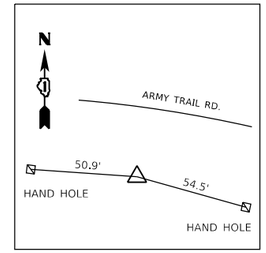

CONTROL POINT 22

MAG NAIL IN S. SHOULDER
ARMY TRAIL
STA. 197+03.53 37.27R
N=1923259.0461
E=1018034.5427
ELEV.=801.1070

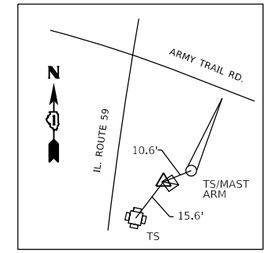

CONTROL POINT 23

"X" IN N.W. CORNER
HANDHOLE
STA. 499+30.78 59.68R
N=1923148.2344
E=1018378.6368
ELEV.=801.4500

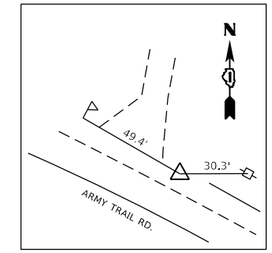

CONTROL POINT 24

MAG NAIL IN N. SHOULDER
ARMY TRAIL
STA. 212+56.25 32.13L
N=1922781.4580
E=1019505.7592
ELEV.=787.5950

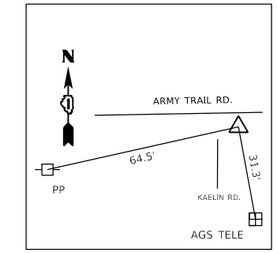

CONTROL POINT 61

MAG NAIL IN RETURN
AT KAELIN
STA. 178+38.64 18.71R
N=1923266.9610
E=1016176.6921
ELEV.=798.7920

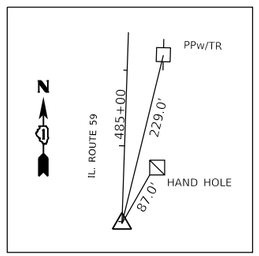

POINT 100

MAG NAIL ~ IL. 59
STA. 483+97.50
N=1921627.2217
E=1018232.7470
ELEV.=778.1740

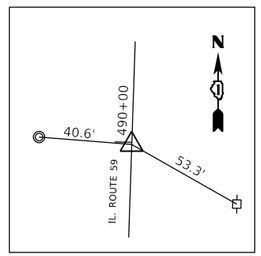

POINT 101

MAG NAIL IN MEDIAN
IL 59 SOUTH
STA. 489+99.07
N=1922228.4513
E=1018252.9709
ELEV.=794.5530

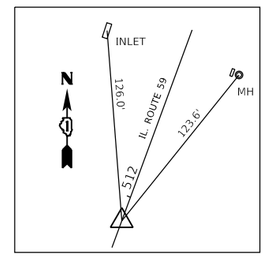

POINT 102

MAG NAIL IN MEDIAN
IL 59 NORTH
STA. 511+66.70
N=1924347.4264
E=1018642.4195
ELEV.=796.8050

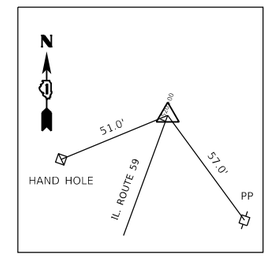

POINT 110

MAG NAIL IN MEDIAN
STA. 520+08.19
N=1925137.1035
E=1018933.1372
ELEV.=807.0534

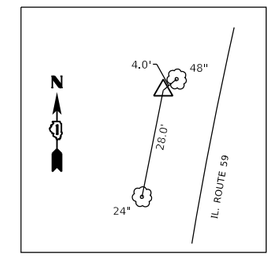

POINT 111

IRON ROD IN GRASS
STA. 501+66.70 67.77L
N=1923396.2697
E=1018292.2535

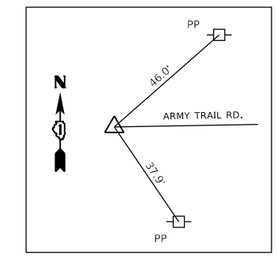

POINT 199

MAG NAIL ~ ARMY
TRAIL ROAD
STA. 177+54.62
N=1923284.1494
E=1016092.3507
ELEV.=799.3181

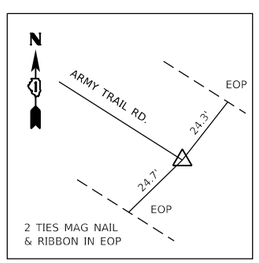

POINT 205

MAG NAIL ~ ARMY
TRAIL (EAST)
STA. 218+22.31
N=1922458.6384
E=1019974.0951
ELEV.=767.7894

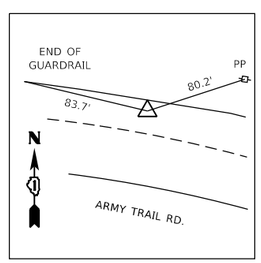

POINT 208

PI MAG NAIL ARMY
TRAIL END G/R
STA. 197+53.97 32.47L
N=1923320.3761
E=1018091.3710

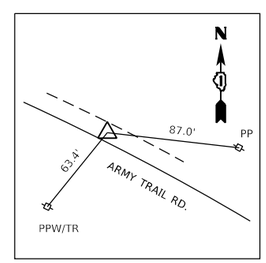

POINT 209

PI MAG NAIL
ARMY TRAIL
STA. 212+02.66 14.91L
N=1922791.3576
E=1019449.0708

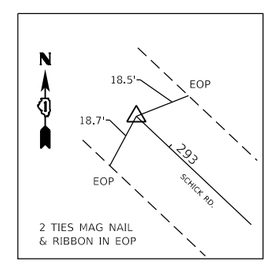

POINT 300

MAG NAIL ~ SCHICK
ROAD (WEST)
STA. 292+40.69
N=1925108.7356
E=1018156.6148
ELEV.=798.7380

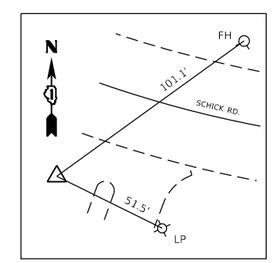

POINT 301

PI MAG NAIL IN ENT.
STA. 296+96.38 45.37R
N=1924796.1330
E=1018488.1722
ELEV.=800.5199

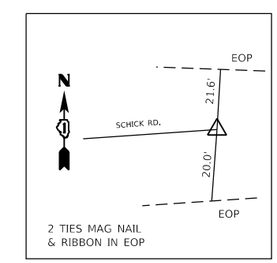

POINT 303

MAG NAIL ~ SCHICK
ROAD (EAST)
STA. 302+99.99>
N=1924839.1519
E=1019115.1795
ELEV.=810.0743

MODEL: Default
FILE NAME: pw:\\ildanoom.dot.illinois.gov:PWIDOT\Documents\IDOT Offices\District 1\Projects\P105014\CADData\CADsheets\P105014-int-ATB.dgn

USER NAME = kalorm	DESIGNED -	REVISED -	
	DRAWN -	REVISED -	
PLOT SCALE = 200.0000 ' / in.	CHECKED -	REVISED -	
PLOT DATE = 3/21/2019	DATE -	REVISED -	

STATE OF ILLINOIS
DEPARTMENT OF TRANSPORTATION

ALIGNMENT, TIES, AND BENCHMARKS
IL. ROUTE 59 (SUTTON ROAD) AT ARMY TRAIL ROAD

SCALE: NONE | SHEET OF SHEETS | STA. TO STA.

F.A.P. RTE.	SECTION	COUNTY	TOTAL SHEETS	SHEET NO.
338	110TS-N	DUPAGE	133	22
		CONTRACT NO. 62F19		
	ILLINOIS	FED. AID PROJECT		

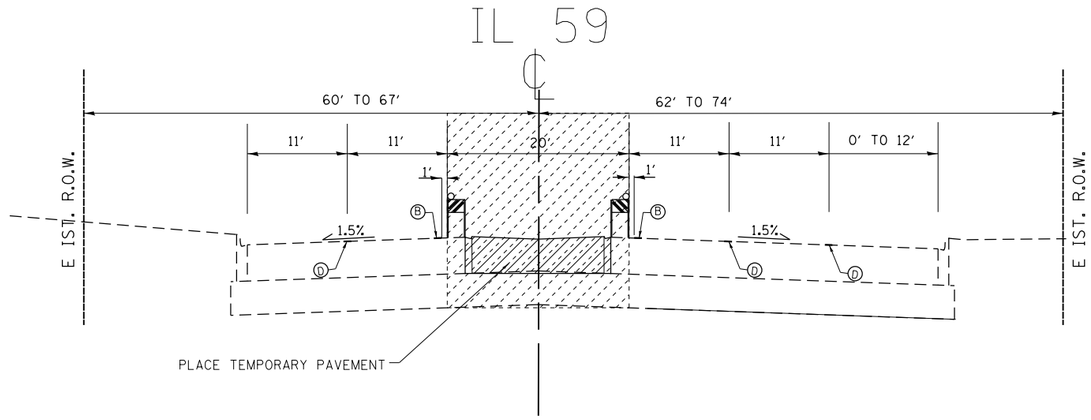

IL 59 (SUTTON ROAD)

PRE STA E

STA. 490+00 TO STA. 494+36

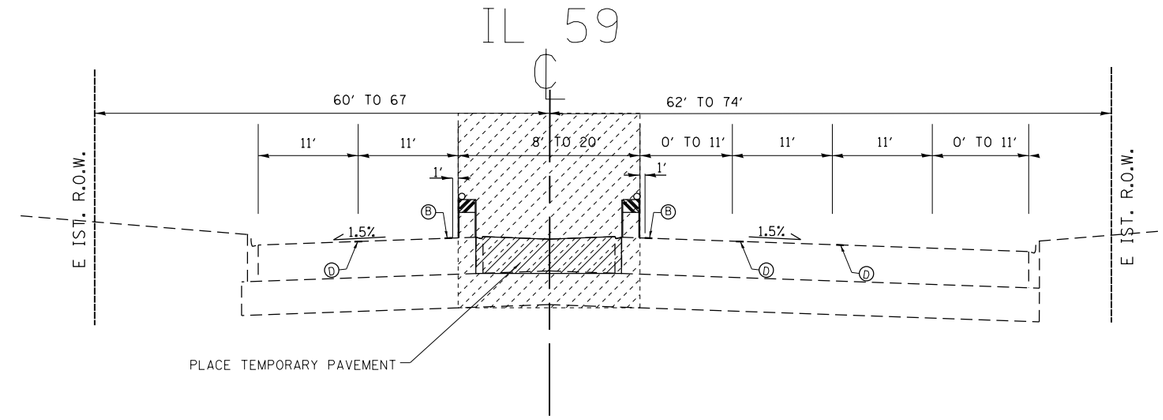

IL 59 (SUTTON ROAD)

PRE STA E

STA. 494+36 TO STA. 500+00

PRE-STAGE: MEDIAN REMOVAL

- REMOVE E ISTING MEDIAN ALONG IL 59
- PLACE TEMPORARY HMA OR PCC PAVEMENT
- PROVIDE TWO 11 FT. TRAVEL LANES AND A TURN LANE IN EACH DIRECTION
- PLACE TYPE I BARRICADES NARROW TO PROTECT TRAFFIC FROM THE CONSTRUCTION ONE

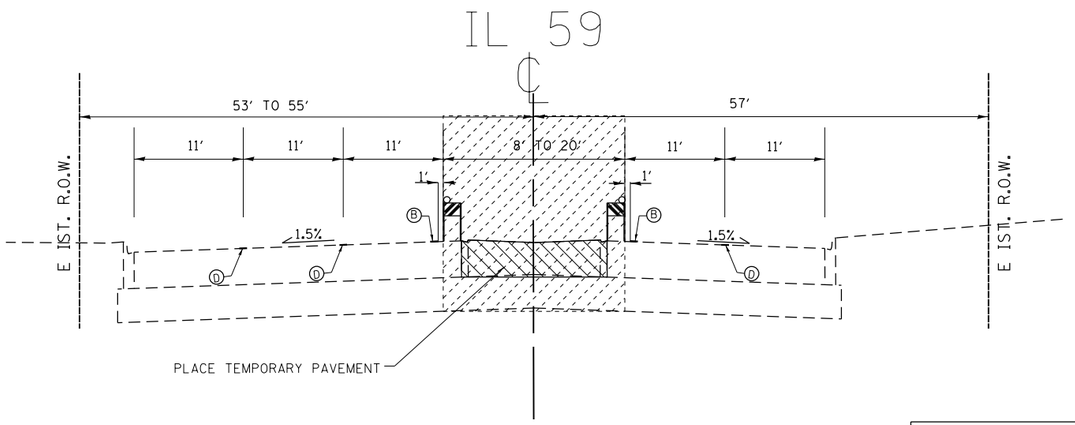

IL 59 (SUTTON ROAD)

PRE STA E

STA. 500+00 TO STA. 505+97

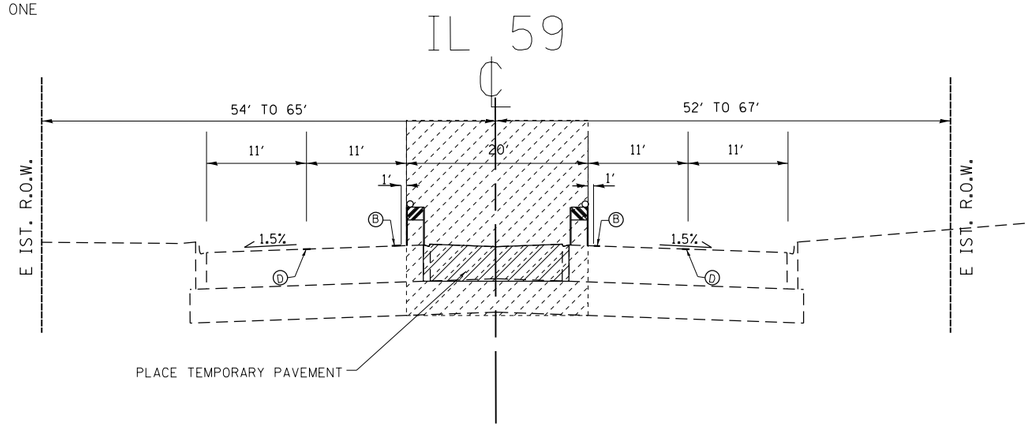

IL 59 (SUTTON ROAD)

PRE STA E

STA. 505+97 TO STA. 511+00

LEGEND:

- (A) TEMPORARY PAVEMENT MARKING TYPE IV 6 SOLID WHITE EDGE LINE WHITE LANE LINE
- (B) TEMPORARY PAVEMENT MARKING TYPE IV 4 SOLID YELLOW EDGE LINE
- (C) TEMPORARY PAVEMENT MARKING TYPE IV 4 SOLID DOUBLE YELLOW 11 C-C
- (D) TEMPORARY PAVEMENT MARKING TYPE IV 4 SKIP DASH WHITE LANE LINE 10' LINE 30' SKIP
- (E) TEMPORARY PAVEMENT MARKING TYPE IV 4 SOLID WHITE EDGE LINE
- WORK ONE
- MEDIAN REMOVAL
- TEMPORARY CONCRETE BARRIER
- DRUMS OR TY II BARRICADE AT 50 FT SPACING DEVICES IN TAPER 20 FT C-C DEVICES IN CURVES RADII 25 FT C-C

NOTES:

TRAFFIC ALONG IL 59 AND ARMY TRAIL RD. SHALL BE MAINTAINED DURING THE WIDENING AND RESURFACING OPERATIONS BY STAGING THE CONSTRUCTION.

IMPACT ATTENUATORS UTILI ED IN WINTER MONTHS MUST NOT BE AFFECTED BY WINTER TEMPS

FILE NAME = pw:\\planroom.dot.illinois.gov:PWIDOT\Documents\IDOT Offices\District 1\Projects\P105014\Drawings\Design\P105014-sht-typical.dgn	USER NAME = kalorm	DESIGNED -	REVISED -
		DRAWN -	REVISED -
	PLOT SCALE = 100.0000 ' / in.	CHECKED -	REVISED -
Default	PLOT DATE = 3/21/2019	DATE -	REVISED -

STATE OF ILLINOIS
DEPARTMENT OF TRANSPORTATION

ILLINOIS ROUTE 59 (SUTTON ROAD) AT ARMY TRAIL ROAD
PRE STA E TYPICAL SECTIONS

SCALE: NONE | SHEET 1 OF 1 SHEETS | STA. TO STA.

F.A.P. RTE.	SECTION	COUNTY	TOTAL SHEETS	SHEET NO.
338	110TS-N	D PAGE	133	23

CONTRACT NO. 62F19

ILLINOIS FED. AID PROJECT

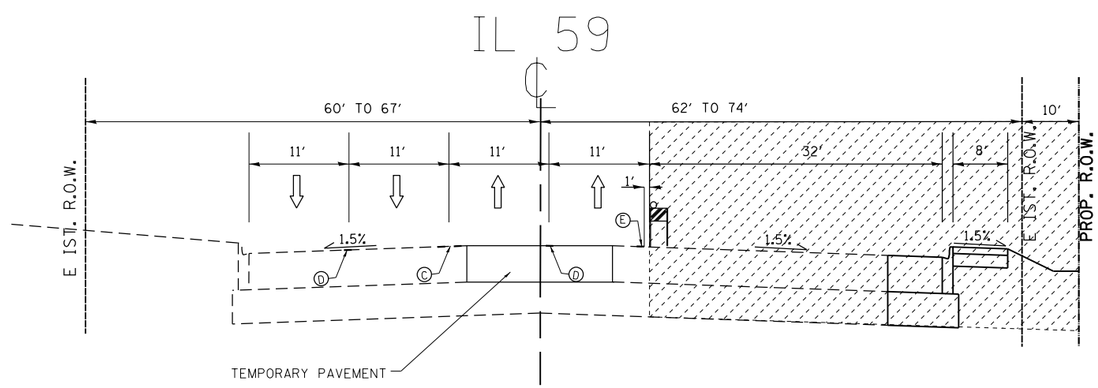

IL 59 (SUTTON ROAD)

STA E 1

STA. 490+00 TO STA. 494+36

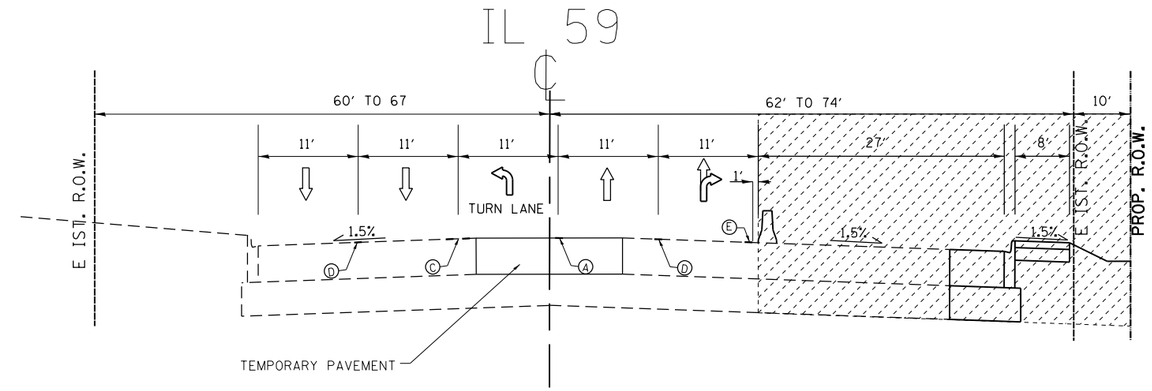

IL 59 (SUTTON ROAD)

STA E 1

STA. 494+36 TO STA. 500+00

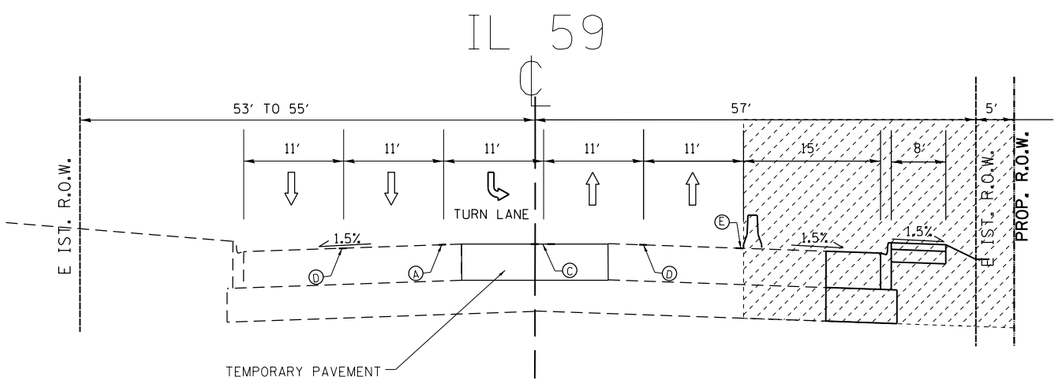

IL 59 (SUTTON ROAD)

STA E 1

STA. 500+00 TO STA. 505+97

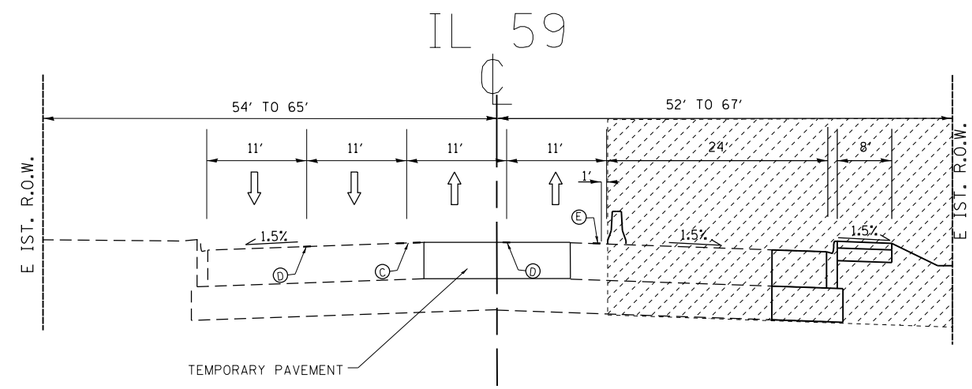

IL 59 (SUTTON ROAD)

STA E 1

STA. 505+97 TO STA. 511+00

LEGEND:

- (A) TEMPORARY PAVEMENT MARKING TYPE IV
  6 SOLID WHITE EDGE LINE WHITE LANE LINE
- (B) TEMPORARY PAVEMENT MARKING TYPE IV
  4 SOLID YELLOW EDGE LINE
- (C) TEMPORARY PAVEMENT MARKING TYPE IV
  4 SOLID DOUBLE YELLOW 11 C-C
- (D) TEMPORARY PAVEMENT MARKING TYPE IV
  4 SKIP DASH WHITE LANE LINE
  10' LINE 30' SKIP
- (E) TEMPORARY PAVEMENT MARKING TYPE IV
  4 SOLID WHITE EDGE LINE
- WORK ONE
- MEDIAN REMOVAL
- TEMPORARY CONCRETE BARRIER
- DRUMS OR TY II BARRICADE AT 50 FT SPACING
  DEVICES IN TAPER 20 FT C-C
  DEVICES IN CURVES RADII 25 FT C-C

STAGE 1 EAST SIDE CONSTRUCTION:

- PROVIDE TWO 11 FT. TRAVEL LANES AND A TURN LANE IN EACH DIRECTION
- PLACE TEMPORARY CONCRETE BARRIER TO PROTECT TRAFFIC FROM THE CONSTRUCTION ONE
- WESTBOUND TRAFFIC WILL BE REDUCED TO ONE LANE TO CONSTRUCT RIGHT TURN LANE
- CONSTRUCT BIKE PATH TRAFFIC SIGNAL CURB AND GUTTER AND NEW PAVEMENT

NOTES:

TRAFFIC ALONG IL 59 AND ARMY TRAIL RD. SHALL BE MAINTAINED DURING THE WIDENING AND RESURFACING OPERATIONS BY STAGING THE CONSTRUCTION.

IMPACT ATTENUATORS UTILI ED IN WINTER MONTHS MUST NOT BE AFFECTED BY WINTER TEMPS

FILE NAME = pw:\\planroom.dot.illinois.gov:PWIDOT\Documents\IDOT Offices\District 1\Projects\P105014\DRAWING\Design\P105014-sht-typical.dgn	USER NAME = kalorm	DESIGNED -	REVISED -
		DRAWN -	REVISED -
	PLOT SCALE = 100.0000 ' / in.	CHECKED -	REVISED -
Default	PLOT DATE = 3/21/2019	DATE -	REVISED -

STATE OF ILLINOIS
DEPARTMENT OF TRANSPORTATION

ILLINOIS ROUTE 59 (SUTTON ROAD) AT ARMY TRAIL ROAD
STA E 1 TYPICAL SECTIONS

SCALE: NONE | SHEET 1 OF 1 SHEETS | STA. TO STA.

F.A.P. RTE.	SECTION	COUNTY	TOTAL SHEETS	SHEET NO.
338	110TS-N	D PAGE	133	24

CONTRACT NO. 62F19

ILLINOIS FED. AID PROJECT

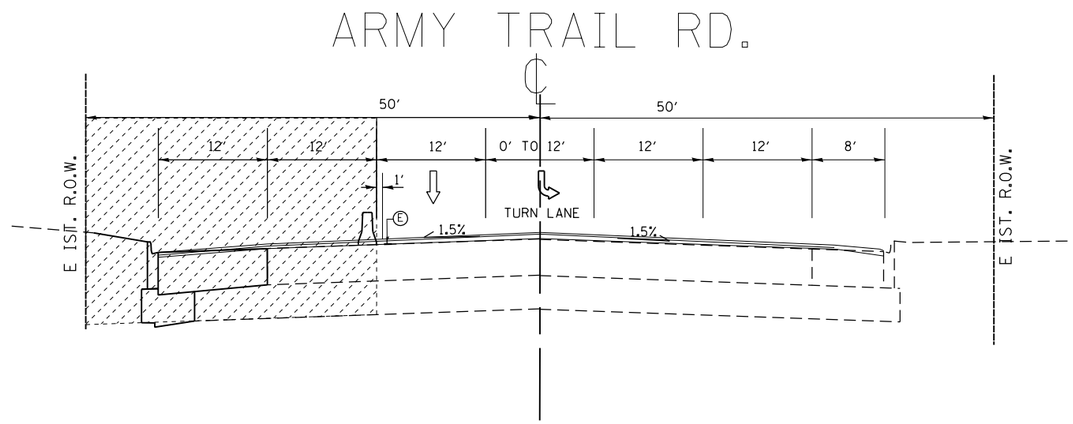

ARMY TRAIL ROAD

STA E 1

STA. 198+99 TO STA. 205+38

LEGEND:

- (A) TEMPORARY PAVEMENT MARKING TYPE IV
  6 SOLID WHITE EDGE LINE WHITE LANE LINE
- (B) TEMPORARY PAVEMENT MARKING TYPE IV
  4 SOLID YELLOW EDGE LINE
- (C) TEMPORARY PAVEMENT MARKING TYPE IV
  4 SOLID DOUBLE YELLOW 11 C-C
- (D) TEMPORARY PAVEMENT MARKING TYPE IV
  4 SKIP DASH WHITE LANE LINE
  10' LINE 30' SKIP
- (E) TEMPORARY PAVEMENT MARKING TYPE IV
  4 SOLID WHITE EDGE LINE
- WORK ONE
- MEDIAN REMOVAL
- TEMPORARY CONCRETE BARRIER
- DRUMS OR TY II BARRICADE AT 50 FT SPACING
  DEVICES IN TAPER 20 FT C-C
  DEVICES IN CURVES RADII 25 FT C-C

STAGE 1 EAST LEG CONSTRUCTION:

- PROVIDE ONE 11 FT. TRAVEL LANE AND A TURN LANE IN THE WESTBOUND DIRECTION
- PLACE TEMPORARY CONCRETE BARRIER TO PROTECT TRAFFIC FROM THE CONSTRUCTION ONE
- WESTBOUND TRAFFIC WILL BE REDUCED TO ONE THROUGH LANE TO CONSTRUCT RIGHT TURN LANE

NOTES:

TRAFFIC ALONG IL 59 AND ARMY TRAIL RD. SHALL BE MAINTAINED DURING THE WIDENING AND RESURFACING OPERATIONS BY STAGING THE CONSTRUCTION.

IMPACT ATTENUATORS UTILI ED IN WINTER MONTHS MUST NOT BE AFFECTED BY WINTER TEMPS

FILE NAME = pw:\\planroom.dot.illinois.govPWIDOT\Documents\IDOT Offices\District 1\Projects\P105014\DRAWING\Design\P105014-sht-typical.dgn	USER NAME = kalorm	DESIGNED -	REVISED -
		DRAWN -	REVISED -
	PLOT SCALE = 100.0000 ' / in.	CHECKED -	REVISED -
Default	PLOT DATE = 3/21/2019	DATE -	REVISED -

STATE OF ILLINOIS
DEPARTMENT OF TRANSPORTATION

ILLINOIS ROUTE 59 (SUTTON ROAD) AT ARMY TRAIL ROAD
STA E 1 TYPICAL SECTIONS

SCALE: NONE | SHEET 1 OF 1 SHEETS | STA. TO STA.

F.A.P. RTE.	SECTION	COUNTY	TOTAL SHEETS	SHEET NO.
338	110TS-N	D PAGE	133	25

CONTRACT NO. 62F19

ILLINOIS FED. AID PROJECT

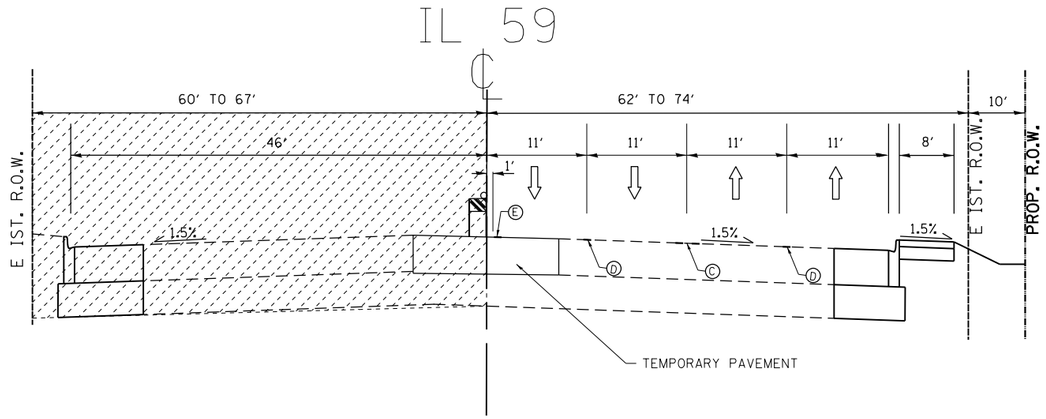

IL 59 (SUTTON ROAD)

STA E 2

STA. 490+00 TO STA. 494+36

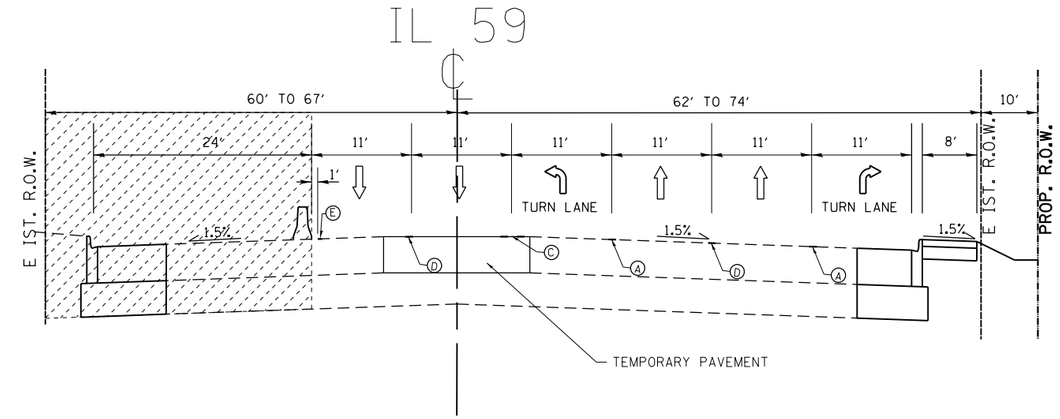

IL 59 (SUTTON ROAD)

STA E 2

STA. 494+36 TO STA. 500+00

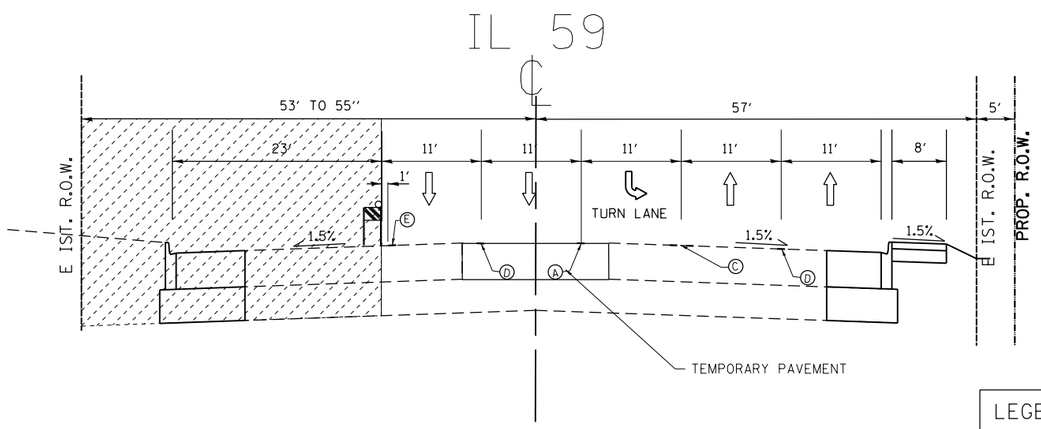

IL 59 (SUTTON ROAD)

STA E 2

STA. 500+00 TO STA. 505+97

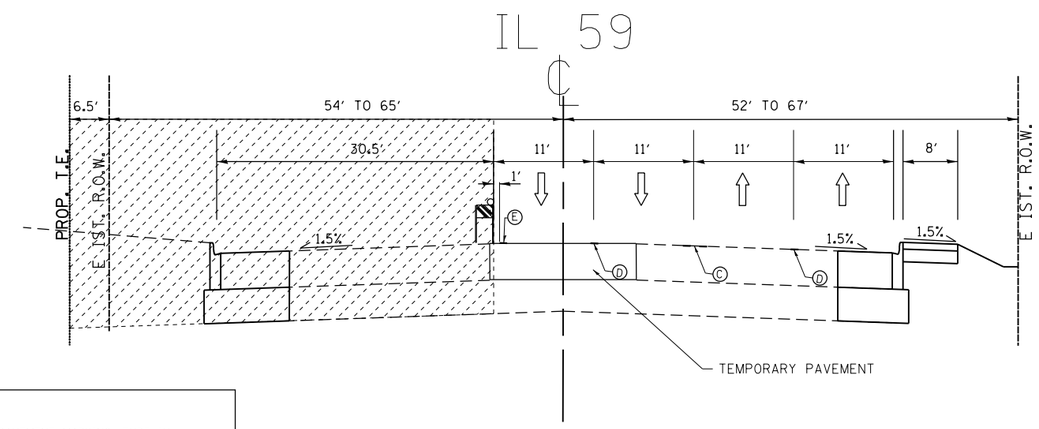

IL 59 (SUTTON ROAD)

STA E 2

STA. 505+97 TO STA. 511+00

NOTE: VARIES BETWEEN DRUMS AND TEMPORARY CONCRETE BARRIER. SEE PLAN SHEET FOR MORE DETAILS

LEGEND:

- (A) TEMPORARY PAVEMENT MARKING TYPE IV
  6 SOLID WHITE EDGE LINE WHITE LANE LINE
- (B) TEMPORARY PAVEMENT MARKING TYPE IV
  4 SOLID YELLOW EDGE LINE
- (C) TEMPORARY PAVEMENT MARKING TYPE IV
  4 SOLID DOUBLE YELLOW 11 C-C
- (D) TEMPORARY PAVEMENT MARKING TYPE IV
  4 SKIP DASH WHITE LANE LINE
  10' LINE 30' SKIP
- (E) TEMPORARY PAVEMENT MARKING TYPE IV
  4 SOLID WHITE EDGE LINE
- WORK ONE
- MEDIAN REMOVAL
- TEMPORARY CONCRETE BARRIER
- DRUMS OR TY II BARRICADE AT 50 FT SPACING
  DEVICES IN TAPER 20 FT C-C
  DEVICES IN CURVES RADII 25 FT C-C

STAGE 2 WEST SIDE CONSTRUCTION:

- SHIFT TRAFFIC TO EAST SIDE OF IL 59
- SHIFT NORTHBOUND TRAFFIC TO UTILI E PART OF THE E ISTING SOUTHBOUND LANE
- PROVIDE TWO 11 FT. LANES AND A TURN LANE IN EACH DIRECTION
- PLACE TEMPORARY CONCRETE BARRIER TO PROTECT TRAFFIC FROM THE CONSTRUCTION ONE
- CONSTRUCT TRAFFIC SIGNAL CURB AND GUTTER AND NEW PAVEMENT

NOTES:

TRAFFIC ALONG IL 59 AND ARMY TRAIL RD. SHALL BE MAINTAINED DURING THE WIDENING AND RESURFACING OPERATIONS BY STAGING THE CONSTRUCTION.

IMPACT ATTENUATORS UTILI ED IN WINTER MONTHS MUST NOT BE AFFECTED BY WINTER TEMPS

FILE NAME = pw:\\planroom.dot.illinois.gov:PWIDOT\Documents\IDOT Offices\District 1\Projects\P105014\DRAWING\Design\P105014-sht-t pical.dgn	USER NAME = kalorm	DESIGNED -	REVISED -
		DRAWN -	REVISED -
	PLOT SCALE = 100.0000 ' / in.	CHECKED -	REVISED -
Default	PLOT DATE = 3/21/2019	DATE -	REVISED -

STATE OF ILLINOIS
DEPARTMENT OF TRANSPORTATION

ILLINOIS ROUTE 59 (SUTTON ROAD) AT ARMY TRAIL ROAD
STA E 2 TYPICAL SECTIONS

SCALE: NONE | SHEET 1 OF 1 SHEETS | STA. TO STA.

F.A.P. RTE.	SECTION	COUNTY	TOTAL SHEETS	SHEET NO.
338	110TS-N	D PAGE	133	26
		CONTRACT NO. 62F19		
	ILLINOIS FED. AID PROJECT			

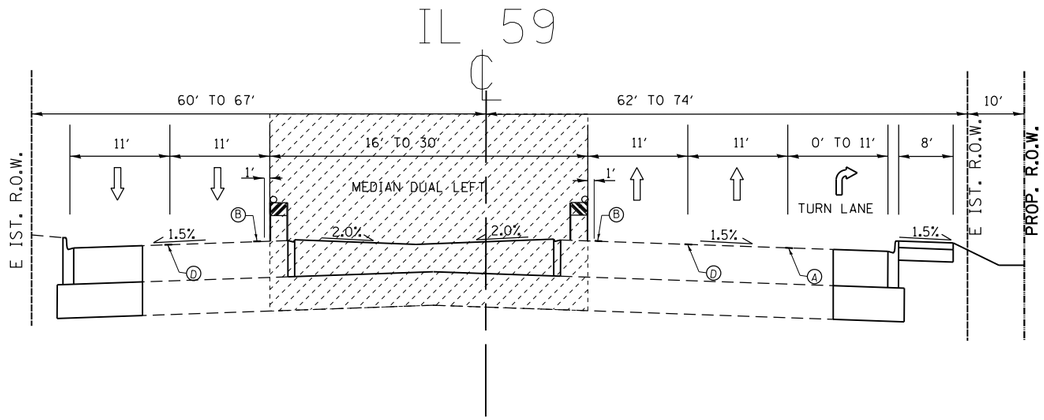

IL 59 (SUTTON ROAD)

STA E 3

STA. 490+00 TO STA. 494+36

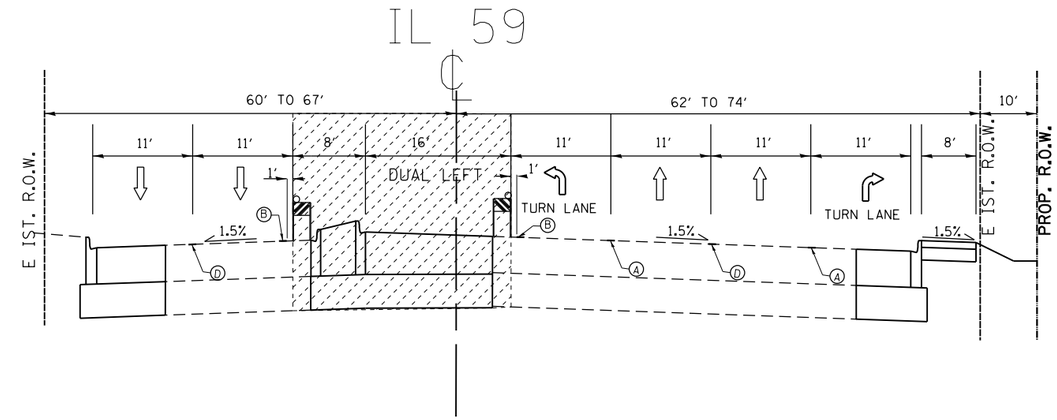

IL 59 (SUTTON ROAD)

STA E 3

STA. 494+36 TO STA. 500+00

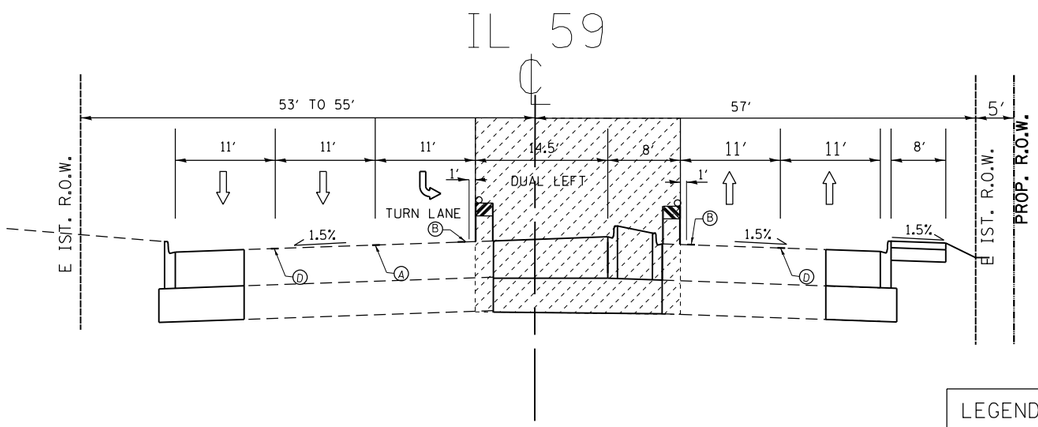

IL 59 (SUTTON ROAD)

STA E 3

STA. 500+00 TO STA. 505+97

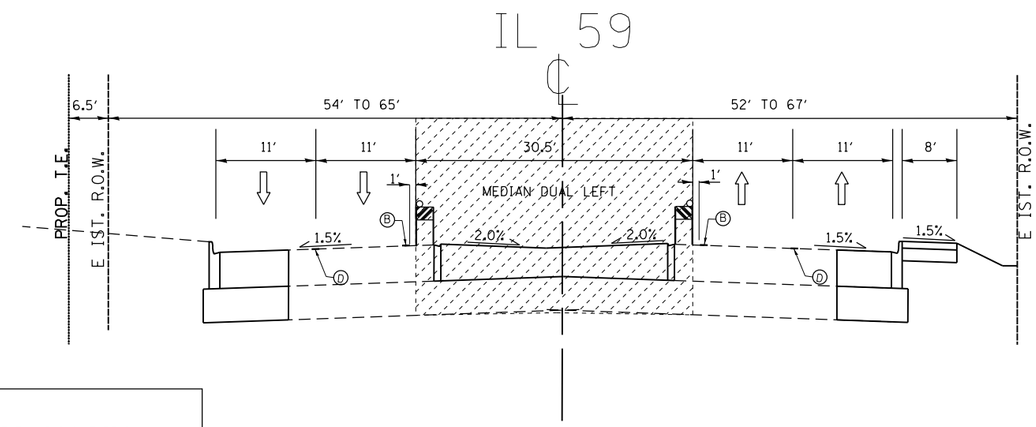

IL 59 (SUTTON ROAD)

STA E 3

STA. 505+97 TO STA. 511+00

STAGE 3
MEDIAN AND TURN LANE CONSTRUCTION:

- SHIFT SOUTHBOUND TRAFFIC TO THE WEST SIDE OF IL 59
- NORTHBOUND TRAFFIC WILL REMAIN ON THE EAST SIDE OF IL 59
- PROVIDE TWO 11 FT. LANES AND A TURN LANE IN EACH DIRECTION
- PLACE TYPE I BARRICADES NARROW TO PROTECT TRAFFIC FROM THE CONSTRUCTION ONE
- REMOVE TEMPORARY PAVEMENT
- CONSTRUCT MEDIAN AND DUAL LEFT TURN LANES

LEGEND:

Ⓐ TEMPORARY PAVEMENT MARKING TYPE IV
6 SOLID WHITE EDGE LINE WHITE LANE LINE

Ⓑ TEMPORARY PAVEMENT MARKING TYPE IV
4 SOLID YELLOW EDGE LINE

Ⓒ TEMPORARY PAVEMENT MARKING TYPE IV
4 SOLID DOUBLE YELLOW 11 C-C

Ⓓ TEMPORARY PAVEMENT MARKING TYPE IV
4 SKIP DASH WHITE LANE LINE
10' LINE 30' SKIP

Ⓔ TEMPORARY PAVEMENT MARKING TYPE IV
4 SOLID WHITE EDGE LINE

WORK ONE

MEDIAN REMOVAL

TEMPORARY CONCRETE BARRIER

DRUMS OR TY II BARRICADE AT 50 FT SPACING
DEVICES IN TAPER 20 FT C-C
DEVICES IN CURVES RADII 25 FT C-C

NOTES:

TRAFFIC ALONG IL 59 AND ARMY TRAIL RD. SHALL BE MAINTAINED DURING THE WIDENING AND RESURFACING OPERATIONS BY STAGING THE CONSTRUCTION.

IMPACT ATTENUATORS UTILI ED IN WINTER MONTHS MUST NOT BE AFFECTED BY WINTER TEMPS

FILE NAME = pw:\\planroom.dot.illinois.gov:PWIDOT\Documents\IDOT Offices\District 1\Projects\P105014\DRAWING\Design\P105014-sht-typical.dgn	USER NAME = kalorm	DESIGNED -	REVISED -
		DRAWN -	REVISED -
	PLOT SCALE = 100.0000 ' / in.	CHECKED -	REVISED -
Default	PLOT DATE = 3/21/2019	DATE -	REVISED -

STATE OF ILLINOIS
DEPARTMENT OF TRANSPORTATION

ILLINOIS ROUTE 59 (SUTTON ROAD) AT ARMY TRAIL ROAD
STA E 3 TYPICAL SECTIONS

SCALE: NONE | SHEET 1 OF 1 SHEETS | STA. TO STA.

F.A.P. RTE.	SECTION	COUNTY	TOTAL SHEETS	SHEET NO.
338	110TS-N	D PAGE	133	27
		CONTRACT NO. 62F19		
		ILLINOIS FED. AID PROJECT		

END WORK ONE SPEED LIMIT
G20-I103
36 60

IL. ROUTE 59

PRO ECT LIMIT
STA. 490 + 00

EXIST. R.O.W.

TYPE II BARRICADES OR DRUMS 50' C-C

PROPOSED TEMPORARY PAVEMENT MARKING TAPE TYPE IV
4 YELLOW EDGE LINE TYP.

T.E.

WORK ONE
SPEED LIMIT 35
PHOTO ENFORCED
375 FINE MINIMUM

W2-I115 0 -3618
R2-1-3648
R10-I108 -3618
R2-I106 -3618

R.O.W.

485+00
490+00
495+00
500+00
200+00
MATCHLINE STA. 500+00

500' 500' 500'

ROAD CONSTRUCTION AHEAD
W20-I103 0 -48

SPEED LIMIT 35
W3-5 0 -48

W21-1 0 -48
OR
W20-7 0 -48

WOOD CT.

PROP. R.O.W.

PROP. T.E.

R6-1-5418

IDENIN LIMIT
STA. 198 + 98.5

BACK TO BACK
KEEP RIGHT
ONLY
R3-5-2430 R4-7A-2430

IL. ROUTE 59

MATCHLINE STA. 500+00

505+00
510+00

IDENIN LIMIT
STA. 511 + 00

PROPOSED TEMPORARY PAVEMENT MARKING TAPE TYPE IV
4 YELLOW EDGE LINE TYP.

TYPE II BARRICADES OR DRUMS 50' C-C

END WORK ONE SPEED LIMIT
G20-I103
36 60

LEGEND

- WORK AREA
- TEMPORARY CONCRETE BARRIER WALL
- TYPE II BARRICADES OR DRUMS 50' C-C TANGENTS 25' C-C IN CURVES AND RADII AND 20' C-C IN TAPERS.
- SIGN
- IMPACT ATTENUATOR TEMPORARY FULLY REDIRECTIVE TEST LEVEL 3 TYP.
- TYPE III BARRICADE
- THIS SIGN SHALL BE TAKEN DOWN WHEN WORKERS ARE NOT PRESENT

MODEL: Default
FILE NAME: pw:\\dbarroom.dot.illinois.gov:PWIDOT\Documents\IDOT Offices\District 1\Projects\P105014\CADData\Design\P105014-ch1-Pre-Stage.dgn

USER NAME = kalorm	DESIGNED -	REVISED -	
	DRAWN -	REVISED -	
PLOT SCALE = 100.0000 ' / in.	CHECKED -	REVISED -	
PLOT DATE = 3/21/2019	DATE -	REVISED -	

STATE OF ILLINOIS
DEPARTMENT OF TRANSPORTATION

IL ROUTE 59 AT ARMY TRAIL ROAD
PRE STA E CONSTRUCTION

SCALE: SHEET OF SHEETS STA. TO STA.

F.A.P. RTE.	SECTION	COUNTY	TOTAL SHEETS	SHEET NO.
338	110TS-N	DUPAGE	133	28
		CONTRACT NO. 62F19		
		ILLINOIS FED. AID PROJECT		

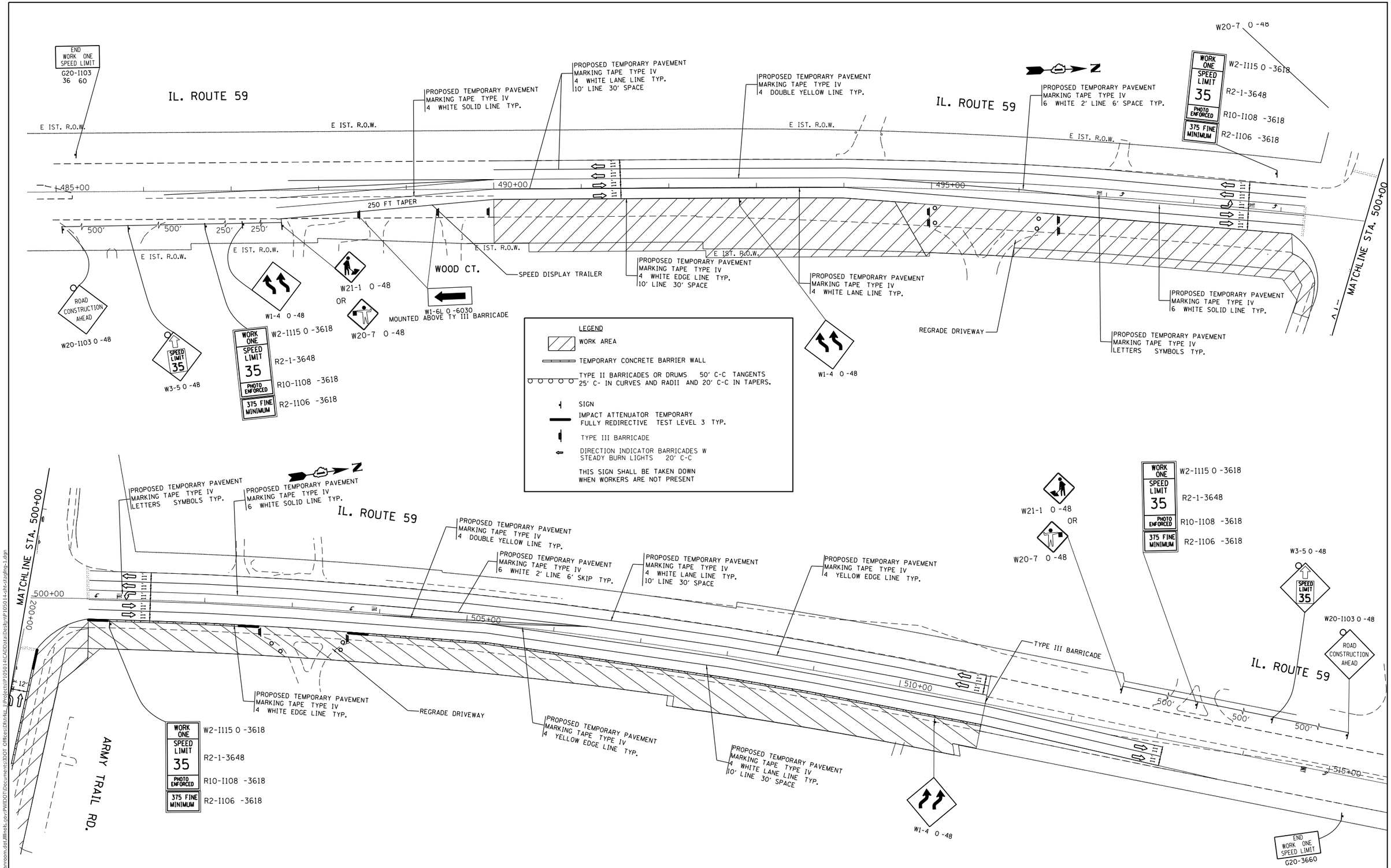

USER NAME = kalorm	DESIGNED -	REVISED -	
	DRAWN -	REVISED -	
PLOT SCALE = 100.0000 ' / in.	CHECKED -	REVISED -	
PLOT DATE = 3/21/2019	DATE -	REVISED -	

STATE OF ILLINOIS
DEPARTMENT OF TRANSPORTATION

IL ROUTE 59 AT ARMY TRAIL ROAD
STA E I CONSTRUCTION

SCALE: | SHEET OF SHEETS | STA. TO STA.

F.A.P. RTE.	SECTION	COUNTY	TOTAL SHEETS	SHEET NO.
338	110TS-N	DUPAGE	133	29

CONTRACT NO. **62F19**

ILLINOIS | FED. AID PROJECT

MODEL: Default
FILE NAME: pw:\\planroom.dot.illinois.gov:PWIDOT\Documents\IDOT Offices\District_1\Projects\P105014\CADData\Design\P105014-sht-staging-1.dgn

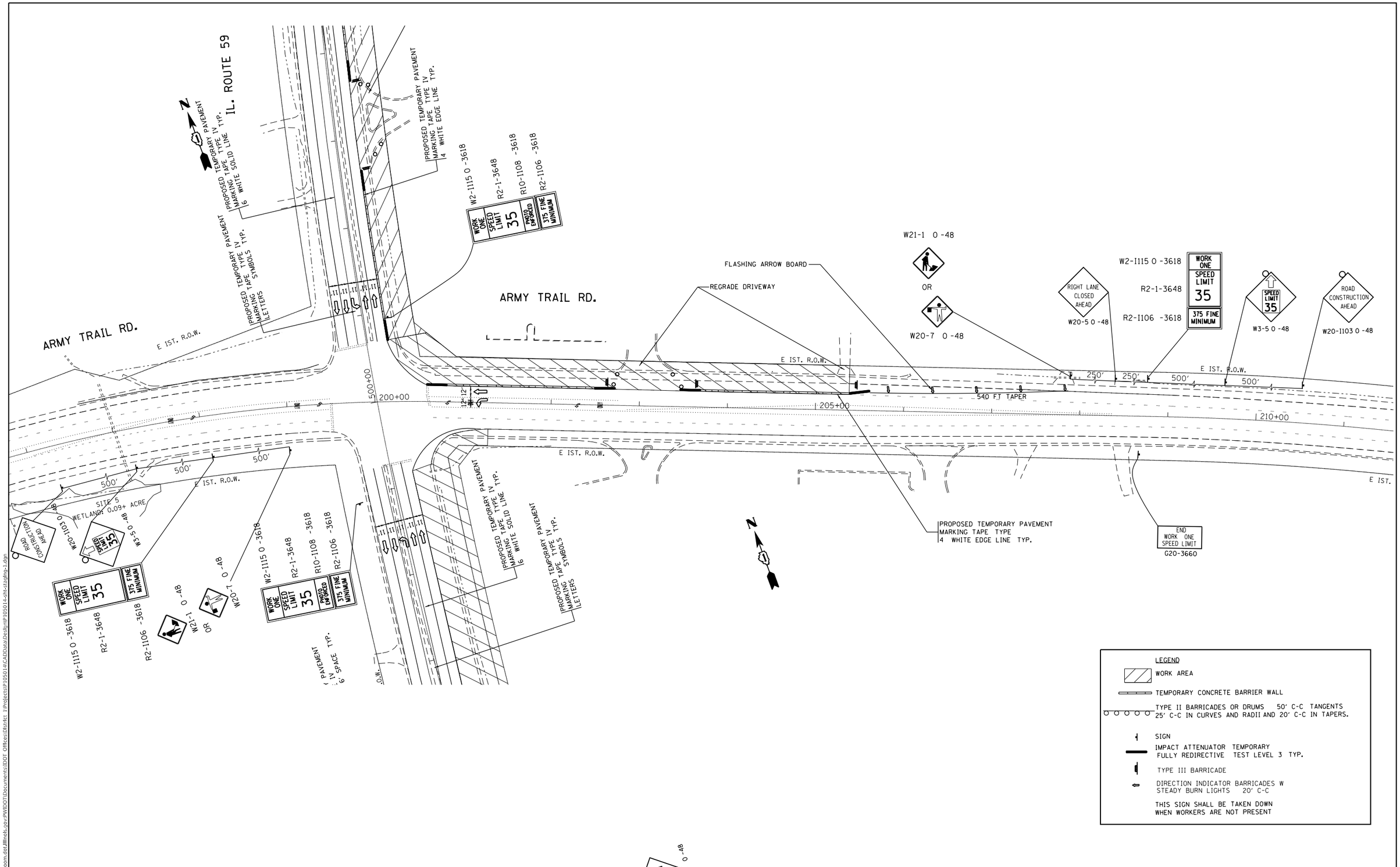

MODEL: Default
FILE NAME: pw:\\ulanroom.dot.illinois.gov:PWIDOT\Documents\IDOT Offices\District 1\Projects\P105014\CADData\Design\P105014-cht-staging-1.dgn

USER NAME = kalorm	DESIGNED -	REVISED -	
	DRAWN -	REVISED -	
PLOT SCALE = 100.0000 ' / in.	CHECKED -	REVISED -	
PLOT DATE = 3/21/2019	DATE -	REVISED -	

STATE OF ILLINOIS
DEPARTMENT OF TRANSPORTATION

IL ROUTE 59 AT ARMY TRAIL ROAD
STA E I CONSTRUCTION

SCALE: | SHEET OF SHEETS | STA. TO STA.

F.A.P. RTE.	SECTION	COUNTY	TOTAL SHEETS	SHEET NO.
338	110TS-N	DUPAGE	133	30
		CONTRACT NO. 62F19		
		ILLINOIS	FED. AID PROJECT	

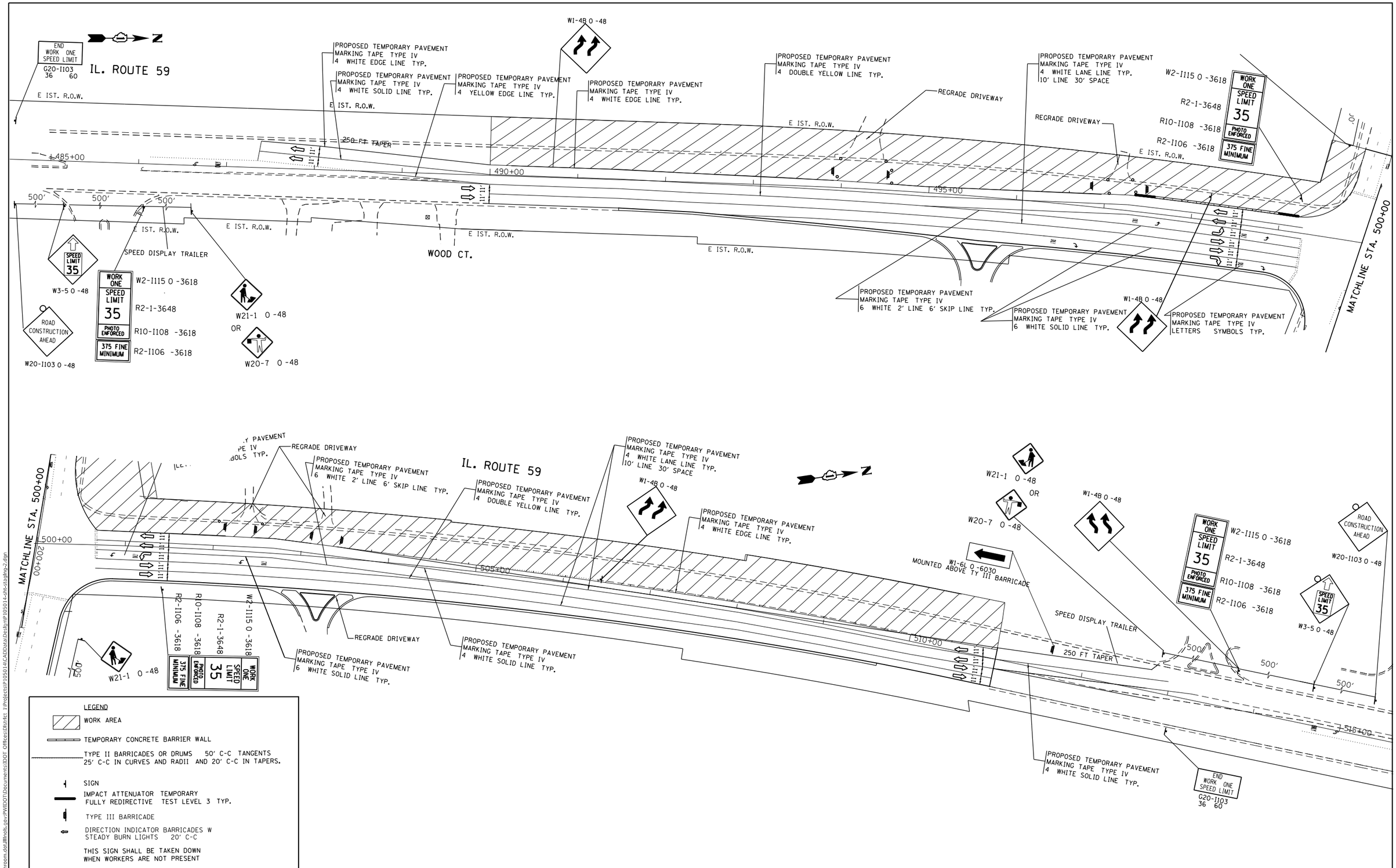

MODEL: Default
FILE NAME: pw:\\planroom.dot.illinois.gov:PWIDOT\Documents\IDOT Offices\District 1\Projects\P10501\CADData\Design\P10501-sht-staging-2.dgn

USER NAME = kalorm	DESIGNED -	REVISED -	
	DRAWN -	REVISED -	
PLOT SCALE = 100.0000 ' / in.	CHECKED -	REVISED -	
PLOT DATE = 3/21/2019	DATE -	REVISED -	

STATE OF ILLINOIS
DEPARTMENT OF TRANSPORTATION

IL ROUTE 59 AT ARMY TRAIL ROAD
STA E II CONSTRUCTION

SCALE: SHEET OF SHEETS STA. TO STA.

F.A.P. RTE.	SECTION	COUNTY	TOTAL SHEETS	SHEET NO.
338	110TS-N	DUPAGE	133	31
		CONTRACT NO. 62F19		
		ILLINOIS FED. AID PROJECT		

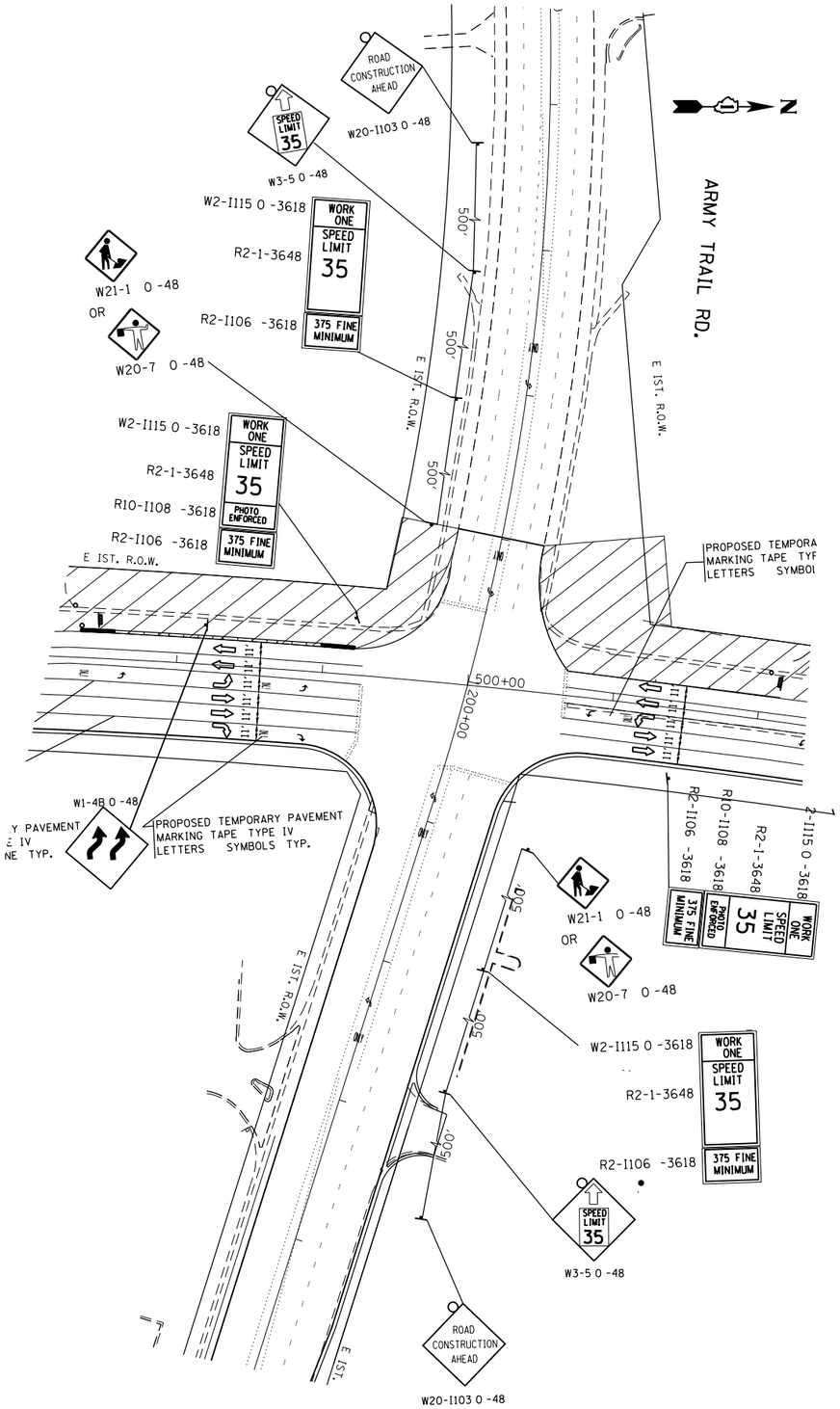

LEGEND

WORK AREA

TEMPORARY CONCRETE BARRIER WALL

TYPE II BARRICADES OR DRUMS 50' C-C TANGENTS
25' C-C IN CURVES AND RADII AND 20' C-C IN TAPERS.

SIGN

IMPACT ATTENUATOR TEMPORARY
FULLY REDIRECTIVE TEST LEVEL 3 TYP.

TYPE III BARRICADE

DIRECTION INDICATOR BARRICADES W
STEADY BURN LIGHTS 20' C-C

THIS SIGN SHALL BE TAKEN DOWN
WHEN WORKERS ARE NOT PRESENT

MODEL: Default
FILE NAME: pw:\\ildnroom.dot.illinois.gov:PWIDOT\Documents\IDOT Offices\District 1\Projects\P105014\CADData\Design\P105014-sht-staging-2.dgn

USER NAME = kalorm	DESIGNED -	REVISED -	
	DRAWN -	REVISED -	
PLOT SCALE = 100.0000 ' / in.	CHECKED -	REVISED -	
PLOT DATE = 3/21/2019	DATE -	REVISED -	

STATE OF ILLINOIS
DEPARTMENT OF TRANSPORTATION

IL ROUTE 59 AT ARMY TRAIL ROAD
STA E II CONSTRUCTION

SCALE: | SHEET OF SHEETS | STA. TO STA.

F.A.P. RTE.	SECTION	COUNTY	TOTAL SHEETS	SHEET NO.
338	110TS-N	DUPAGE	133	32
		CONTRACT NO. 62F19		
	ILLINOIS	FED. AID PROJECT		

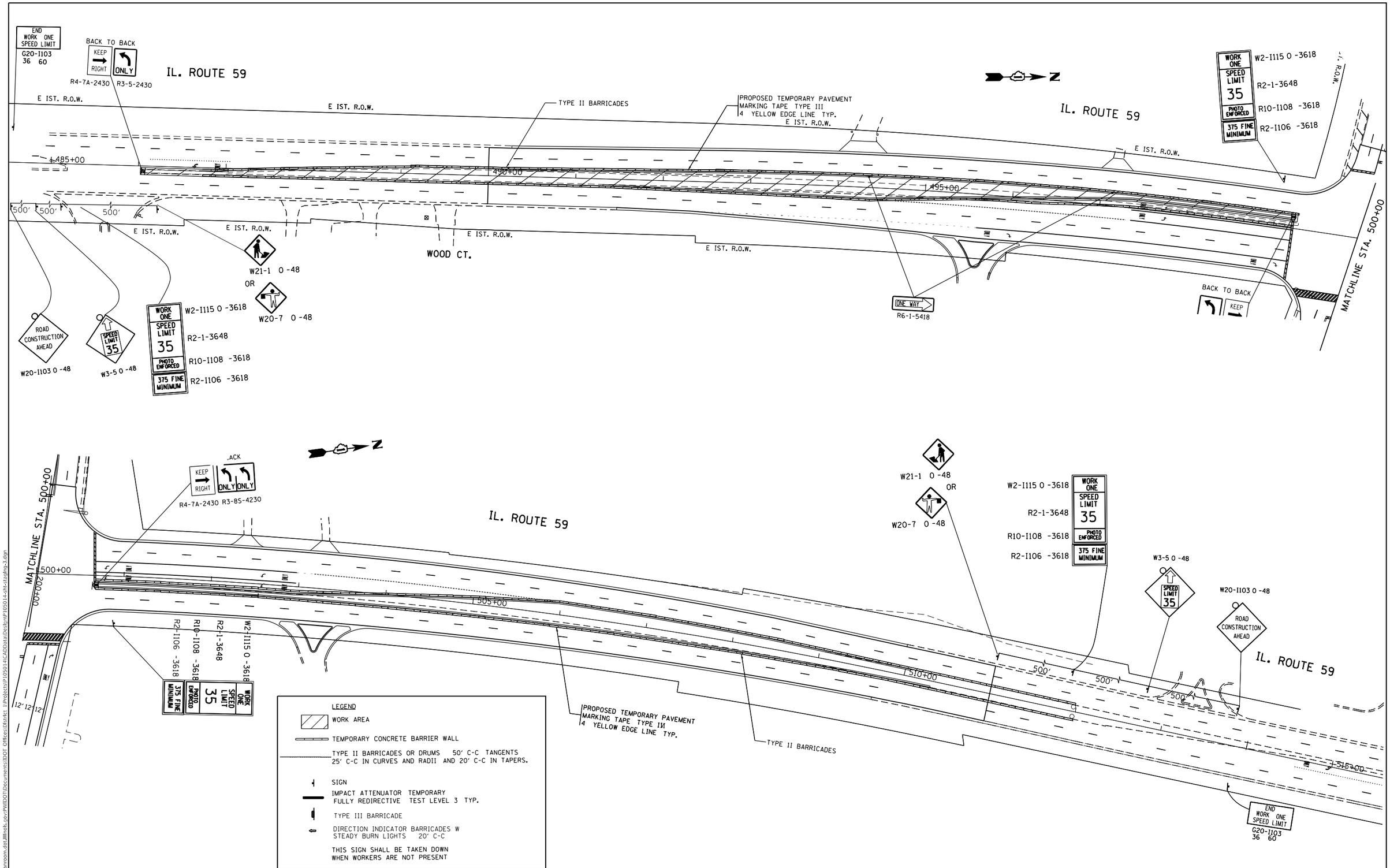

MODEL: Default
FILE NAME: pw:\\planroom.dot.illinois.gov:PWIDOT\Documents\IDOT Offices\District 1\Projects\P105014\CADData\Design\P105014-sht-staging-3.dgn

USER NAME = kalorm	DESIGNED -	REVISED -	
	DRAWN -	REVISED -	
PLOT SCALE = 100.0000 ' / in.	CHECKED -	REVISED -	
PLOT DATE = 3/21/2019	DATE -	REVISED -	

STATE OF ILLINOIS
DEPARTMENT OF TRANSPORTATION

IL ROUTE 59 AT ARMY TRAIL ROAD
STA E III CONSTRUCTION

SCALE: | SHEET OF SHEETS | STA. TO STA.

F.A.P. RTE.	SECTION	COUNTY	TOTAL SHEETS	SHEET NO.
338	110TS-N	DUPAGE	133	33
		CONTRACT NO. 62F19		
		ILLINOIS FED. AID PROJECT		

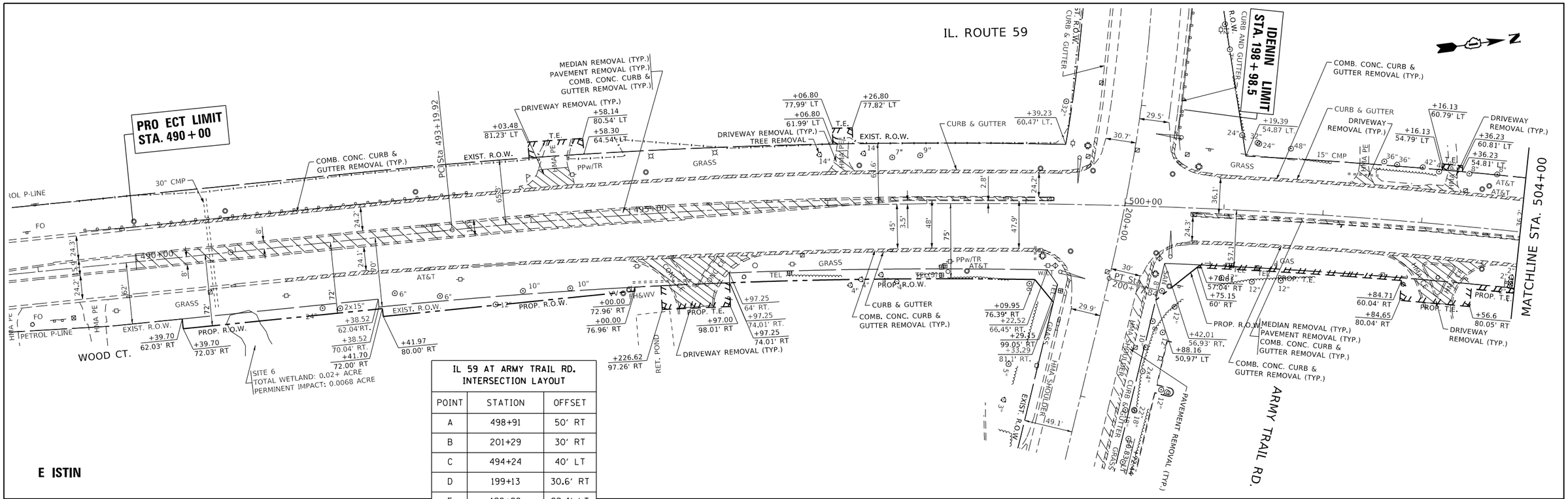

E ISTIN

IL 59 AT ARMY TRAIL RD. INTERSECTION LAYOUT		
POINT	STATION	OFFSET
A	498+91	50' RT
B	201+29	30' RT
C	494+24	40' LT
D	199+13	30.6' RT
E	198+98	29.4' LT
F	500+96	40' LT
G	500+87	38' RT
H	200+29	42' LT

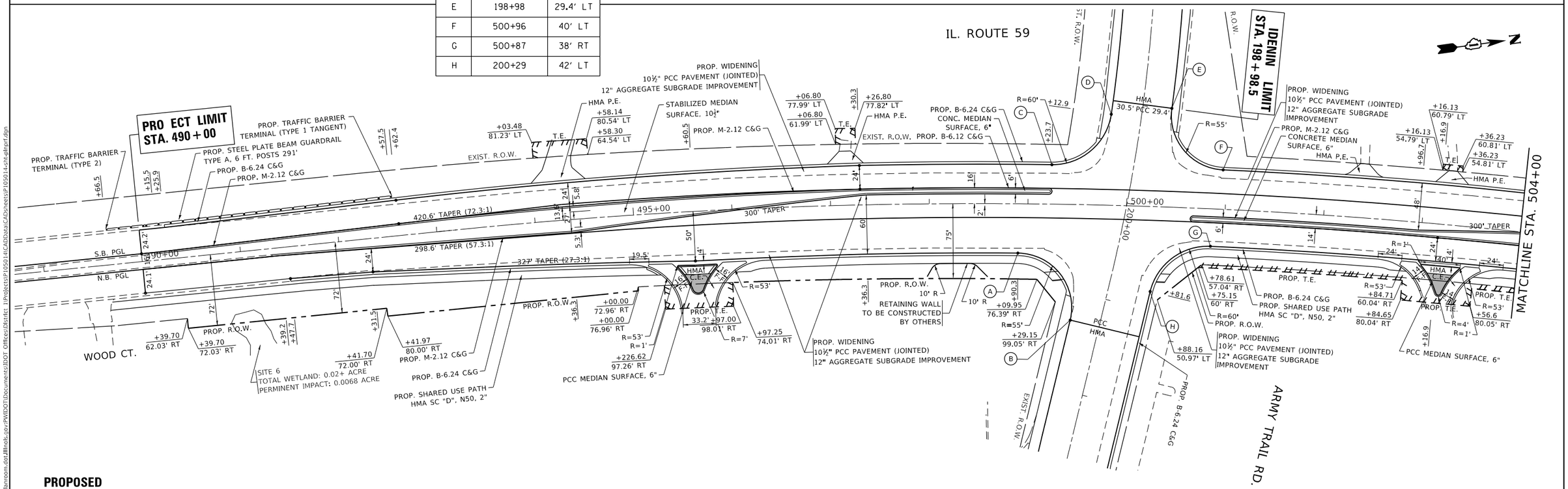

PROPOSED

MODEL: Default
FILE NAME: pw:\\planroom.dot.illinois.gov:PWIDOT\Documents\IDOT Offices\District 1\Projects\P105014\CADData\CADsheets\P105014-sht-plmrf.dgn

USER NAME = kalorm	DESIGNED -	REVISED -	
	DRAWN -	REVISED -	
PLOT SCALE = 100.0000 ' / in.	CHECKED -	REVISED -	
PLOT DATE = 3/21/2019	DATE -	REVISED -	

STATE OF ILLINOIS
DEPARTMENT OF TRANSPORTATION

EXISTING AND PROPOSED ROADWAY PLAN
ILLINOIS ROUTE 59 (SUTTON ROAD) AT ARMY TRAIL ROAD

SCALE: 1"=50' | SHEET OF SHEETS | STA. TO STA.

F.A.P. RTE.	SECTION	COUNTY	TOTAL SHEETS	SHEET NO.
338	110TS-N	DUPAGE	133	34
		CONTRACT NO. 62F19		
		ILLINOIS	FED. AID PROJECT	

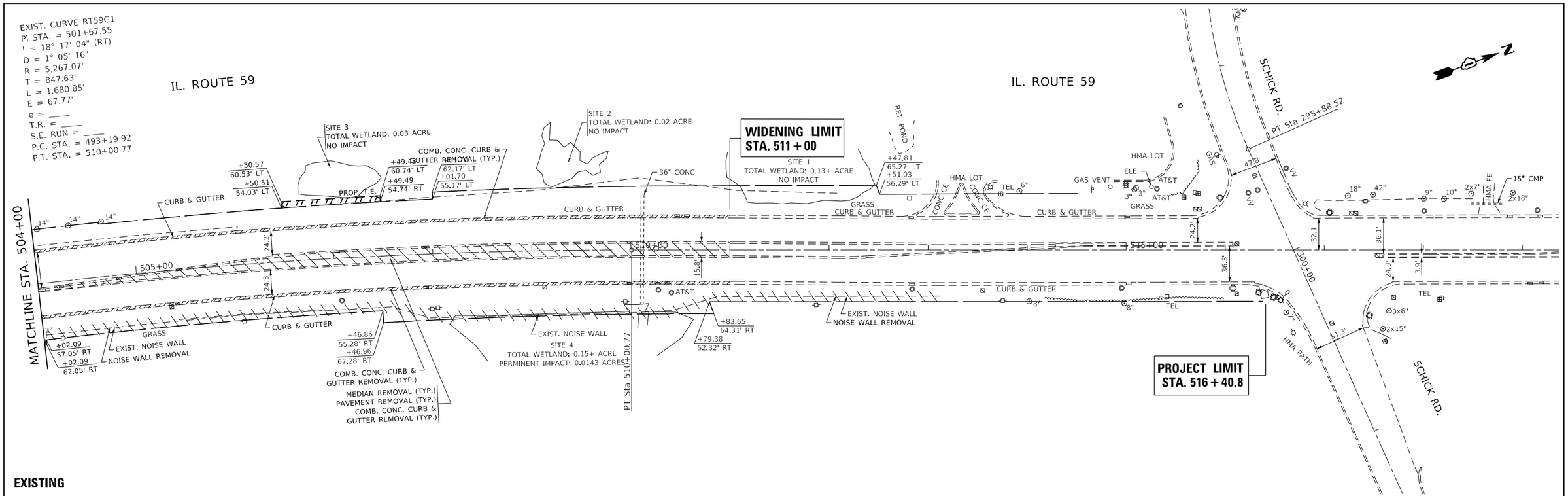

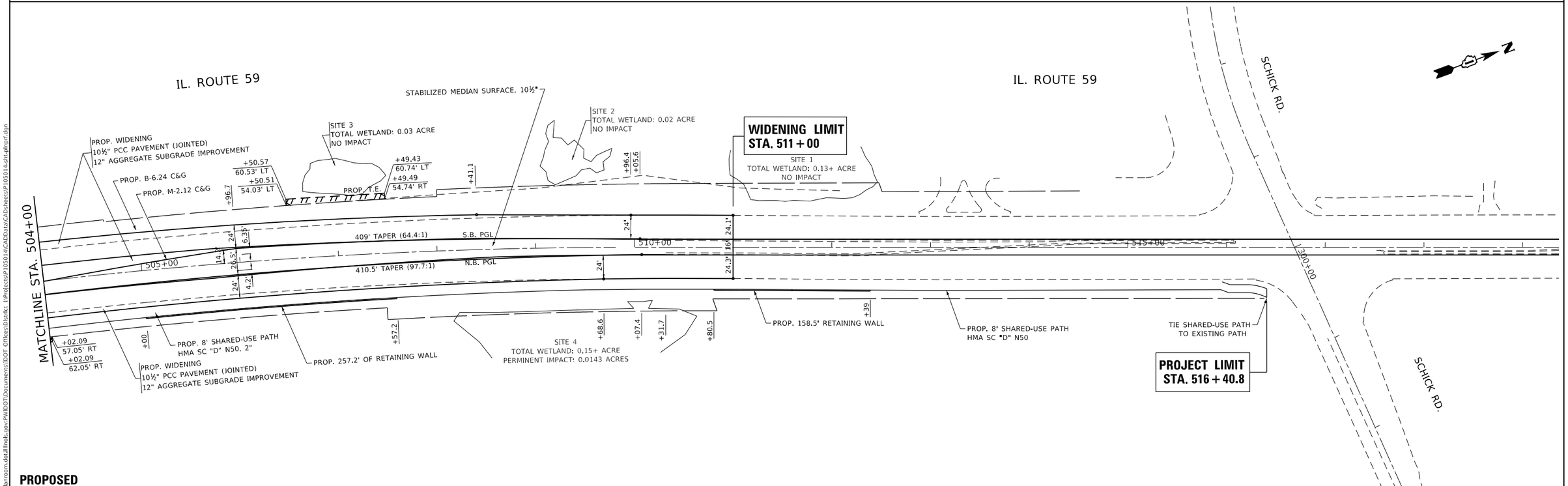

USER NAME = kalorm	DESIGNED -	REVISED - RK 05/03/2019	STATE OF ILLINOIS DEPARTMENT OF TRANSPORTATION
	DRAWN -	REVISED -	
PLOT SCALE = 100.0000 ' / in.	CHECKED -	REVISED -	
PLOT DATE = 4/30/2019	DATE -	REVISED -	

EXISTING AND PROPOSED ROADWAY PLAN
ILLINOIS ROUTE 59 (SUTTON ROAD) AT ARMY TRAIL ROAD

SCALE: 1"=50' | SHEET OF SHEETS | STA. TO STA.

F.A.P. RTE.	SECTION	COUNTY	TOTAL SHEETS	SHEET NO.
338	110TS-N	DUPAGE	133	35
		CONTRACT NO. 62F19		
		ILLINOIS FED. AID PROJECT		

MODEL: Default
FILE NAME: pw:\\dbarroom.dot.illinois.gov:PWIDOT\Documents\IDOT Offices\District 1\Projects\P10501\CADData\CADsheets\P10501-sht-plmprf.dgn

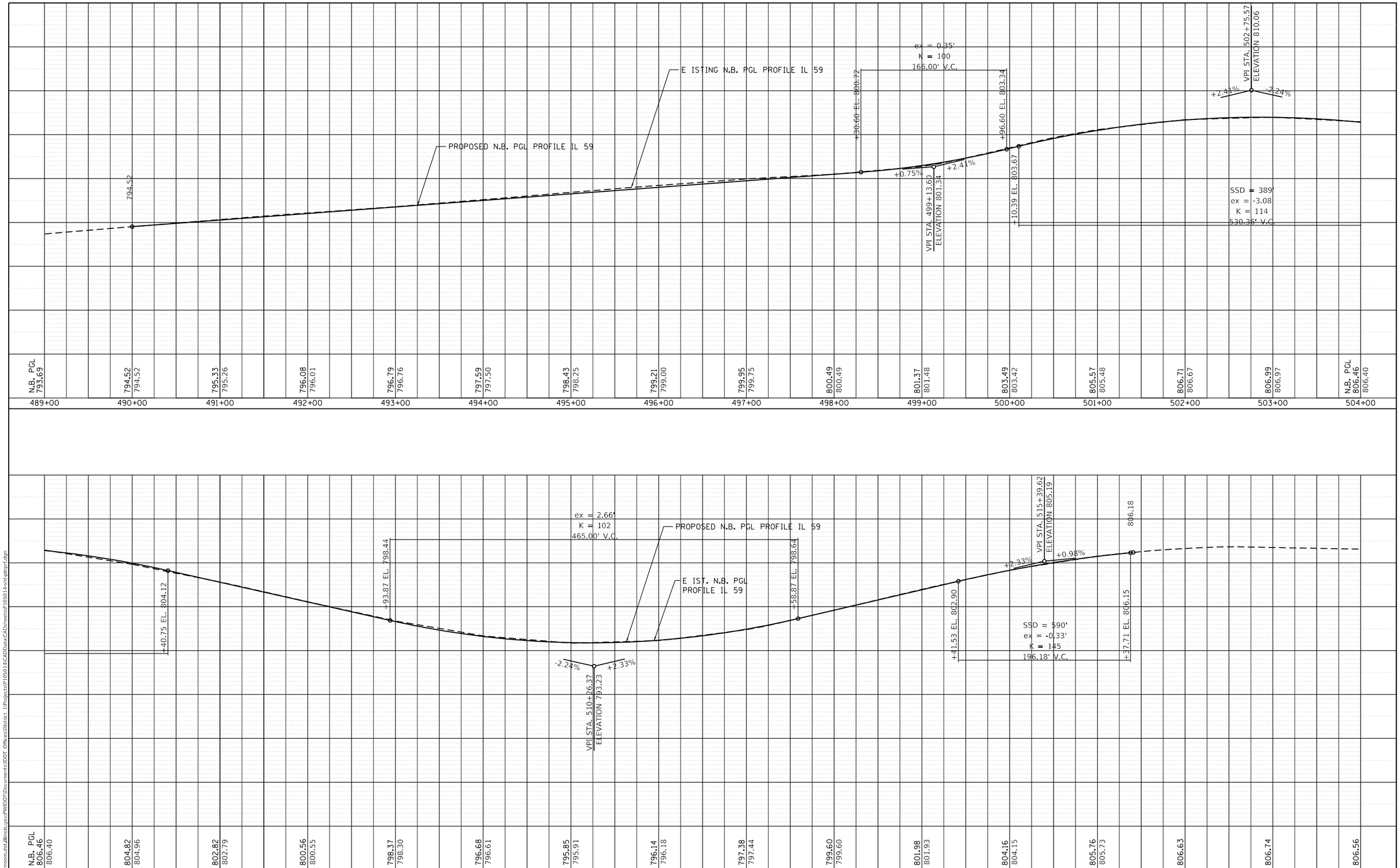

PLAN
NOTE BOOK NO.
SURVEYED
PLOTTED
ALIGNMENT CHECKED
RT. OF WAY CHECKED
CADD FILE NAME
BY
DATE

PROFILE
NOTE BOOK NO.
SURVEYED
PLOTTED
GRADES CHECKED
B.M. NOTED
STRUCTURE NOTAT'NS CHKD
BY
DATE

MODEL: Default
FILE NAME: pw:\\planroom.dot.illinois.gov:PWIDOT\Documents\IDOT Offices\District 1\Projects\P105014\CADData\CADsheets\P105014-int-pgl-prof.dgn

USER NAME = kalorm	DESIGNED -	REVISED -	
	DRAWN -	REVISED -	
PLOT SCALE = 100.0000 ' / in.	CHECKED -	REVISED -	
PLOT DATE = 3/21/2019	DATE -	REVISED -	

STATE OF ILLINOIS
DEPARTMENT OF TRANSPORTATION

NORT OUND ROAD AY PROFILE
ILLINOIS ROUTE 59 (SUTTON ROAD) AT ARMY TRAIL ROAD

SCALE: 1"= 50'H 5'V | SHEET OF SHEETS | STA. 489+00 TO STA. 519+00

F.A.P. RTE.	SECTION	COUNTY	TOTAL SHEETS	SHEET NO.
338	110TS-N	DUPAGE	133	36

CONTRACT NO. 62F19

ILLINOIS | FED. AID PROJECT

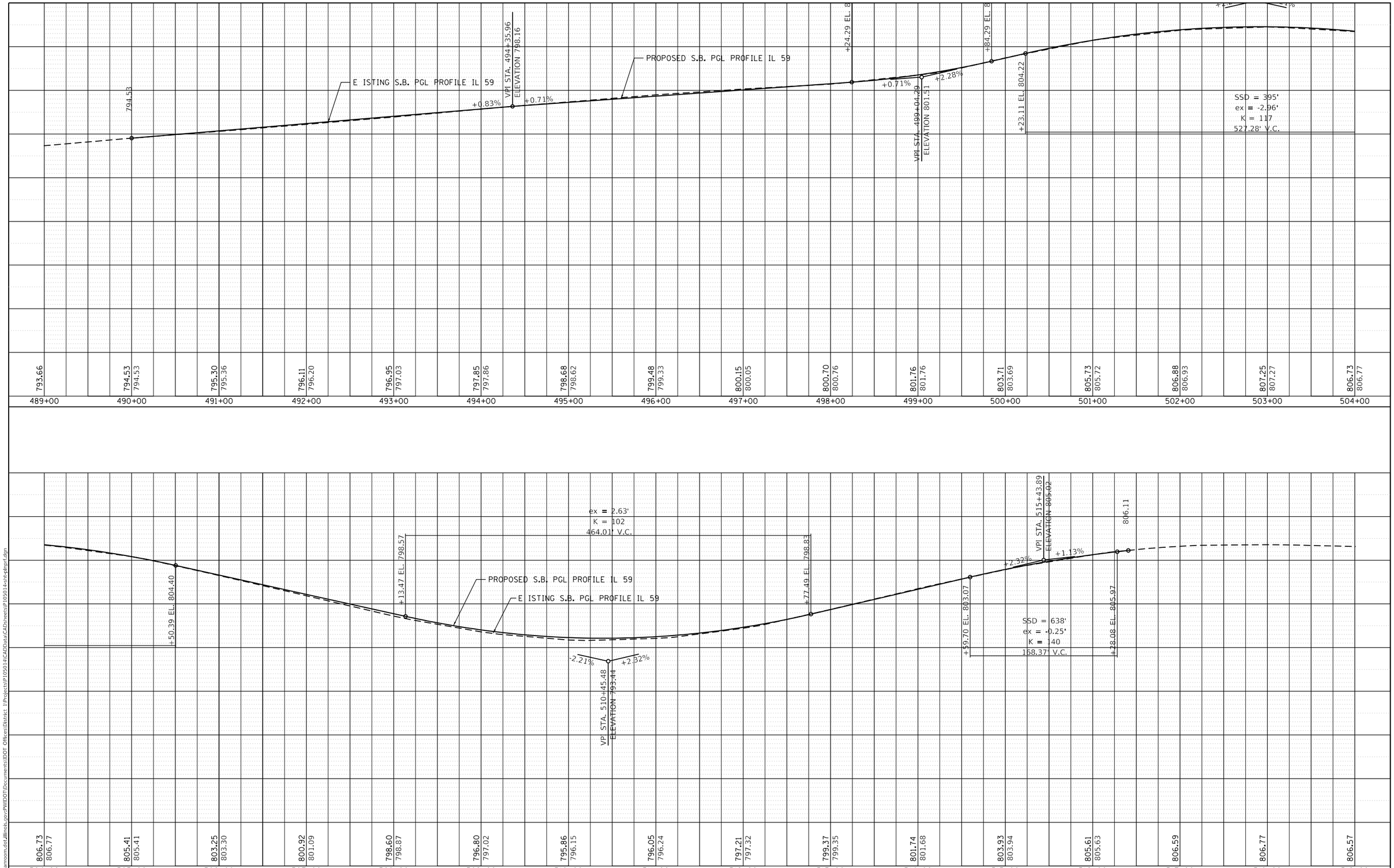

PLAN
NOTE BOOK NO.
SURVEYED
PLOTTED
ALIGNMENT CHECKED
RT. OF WAY CHECKED
CADD FILE NAME
BY
DATE

PROFILE
NOTE BOOK NO.
SURVEYED
PLOTTED
GRADES CHECKED
B.M. NOTED
STRUCTURE NOTAT'NS CHKD
BY
DATE

MODEL: Default
FILE NAME: pw:\\planroom.dot.illinois.gov:PWIDOT\Documents\IDOT Offices\District 1\Projects\P105014\CADData\CADsheets\P105014-int-plprof.dgn

USER NAME = kalorm	DESIGNED -	REVISED -	
	DRAWN -	REVISED -	
PLOT SCALE = 100.0000 ' / in.	CHECKED -	REVISED -	
PLOT DATE = 3/21/2019	DATE -	REVISED -	

STATE OF ILLINOIS
DEPARTMENT OF TRANSPORTATION

SOUT OUND ROAD AY PROFILE
ILLINOIS ROUTE 59 (SUTTON ROAD) AT ARMY TRAIL ROAD

SCALE: 1"= 50'H 5'V | SHEET OF SHEETS | STA. 489+00 TO STA. 519+00

F.A.P. RTE.	SECTION	COUNTY	TOTAL SHEETS	SHEET NO.
338	110TS-N	DUPAGE	133	37

CONTRACT NO. 62F19

ILLINOIS | FED. AID PROJECT

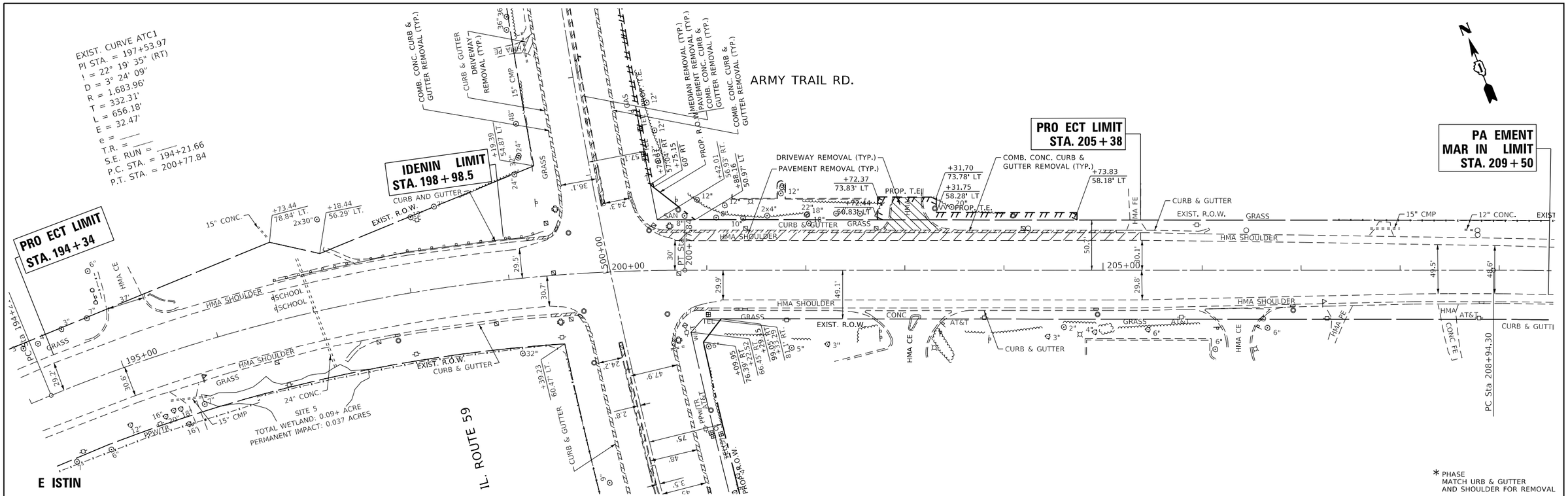

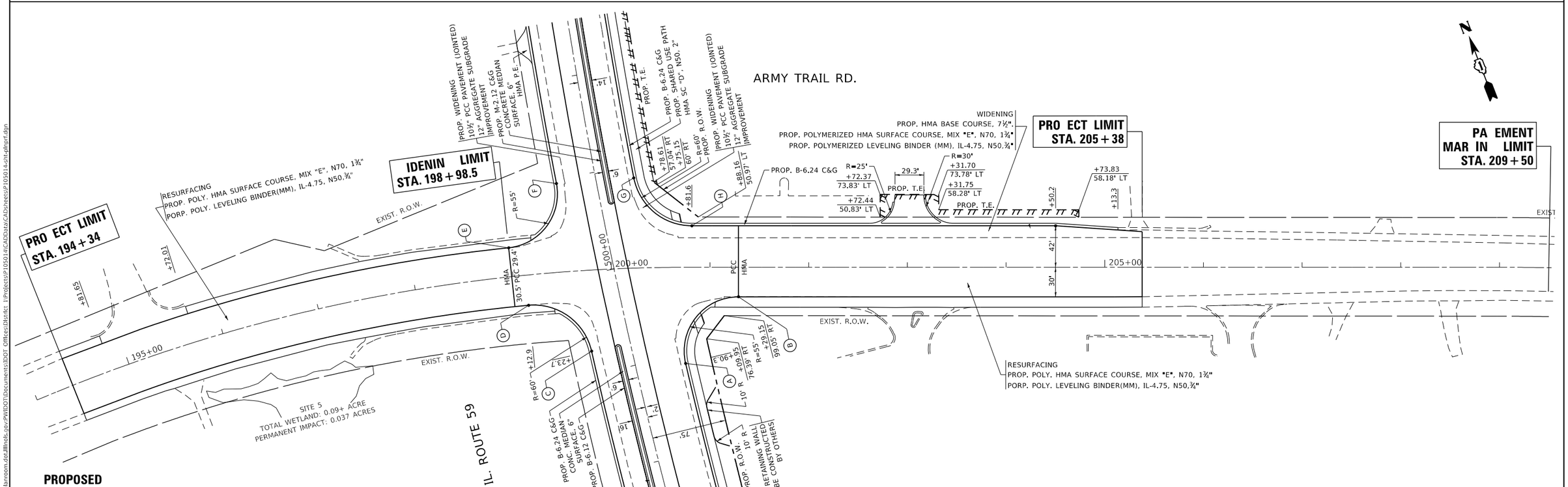

USER NAME = kalorm	DESIGNED -	REVISED -
	DRAWN -	REVISED -
PLOT SCALE = 100.0000 ' / in.	CHECKED -	REVISED -
PLOT DATE = 3/21/2019	DATE -	REVISED -

STATE OF ILLINOIS
DEPARTMENT OF TRANSPORTATION

E ISTIN AND PROPOSED ROAD AY PLAN
ARMY TRAIL ROAD AT ILLINOIS ROUTE 59 (SUTTON ROAD)

SCALE: 1"=50' | SHEET OF SHEETS | STA. TO STA.

F.A.P. RTE.	SECTION	COUNTY	TOTAL SHEETS	SHEET NO.
338	110TS-N	DUPAGE	133	38
		CONTRACT NO. 62F19		
		ILLINOIS	FED. AID PROJECT	

MODEL: Default
FILE NAME: pw:\\ulanroom.dot.illinois.gov:PWIDOT\Documents\IDOT Offices\District 1\Projects\P105014\CADData\CADsheets\P105014-sht-plmprf.dgn

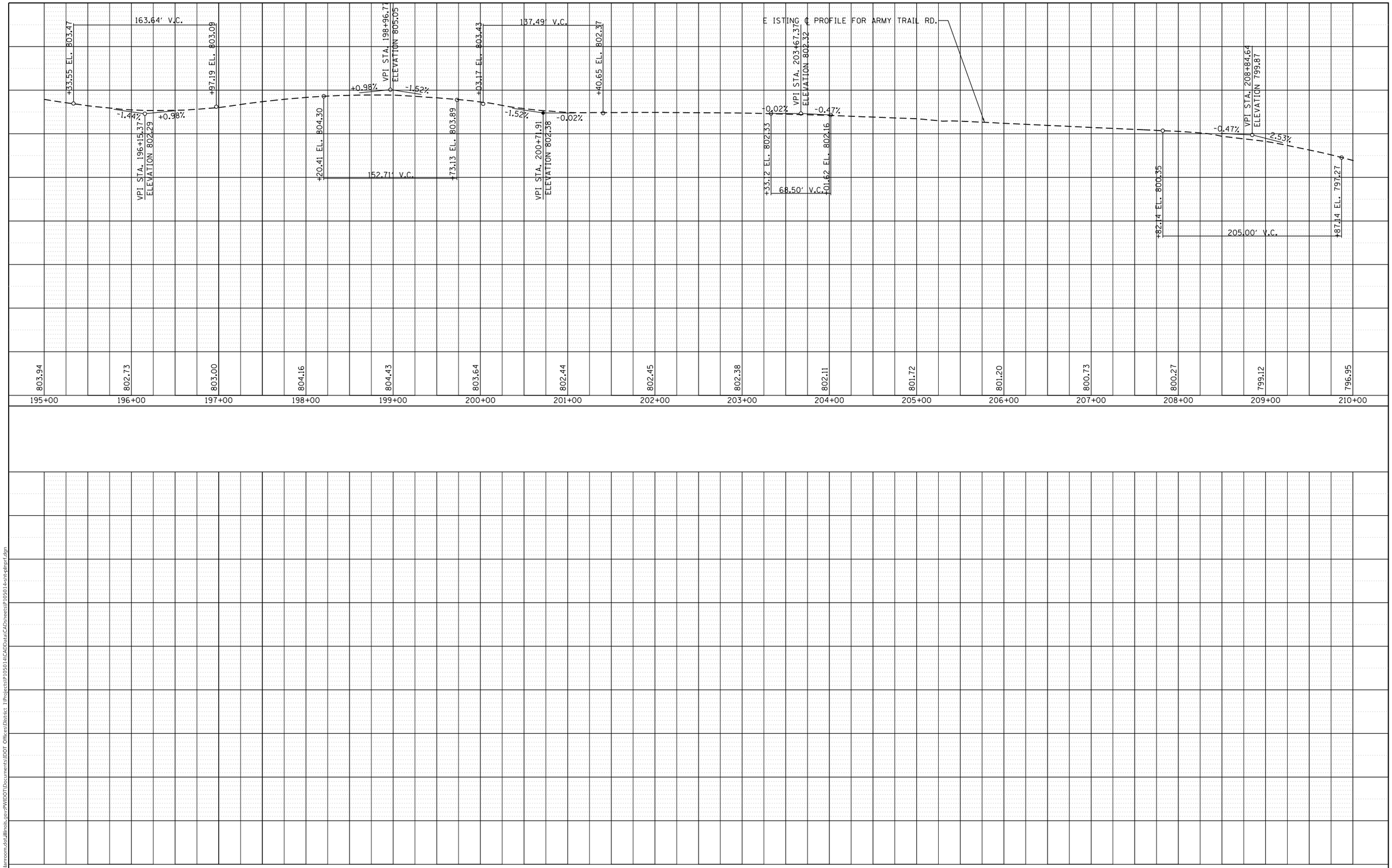

PLAN		BY	DATE
NOTE BOOK NO.	SURVEYED		
	PLOTTED		
	ALIGNMENT CHECKED		
	RT. OF WAY CHECKED		
	CADD FILE NAME		

PROFILE		BY	DATE
NOTE BOOK NO.	SURVEYED		
	PLOTTED		
	GRADES CHECKED		
	B.M. NOTED		
	STRUCTURE NOTAT'NS CHKD		

MODEL: Default
FILE NAME: pw:\\planroom.dot.illinois.gov:PWIDOT\Documents\IDOT Offices\District 1\Projects\P105014\CADData\CADsheets\P105014-int-gl-prof.dgn

USER NAME = kalorm	DESIGNED -	REVISED -
	DRAWN -	REVISED -
PLOT SCALE = 100.0000 ' / in.	CHECKED -	REVISED -
PLOT DATE = 3/21/2019	DATE -	REVISED -

STATE OF ILLINOIS
DEPARTMENT OF TRANSPORTATION

ROAD AY PROFILE
ARMY TRAIL ROAD AT ILLINOIS ROUTE 59 (SUTTON ROAD)

SCALE: 50'H 5'V | SHEET OF SHEETS | STA. TO STA.

F.A.P. RTE.	SECTION	COUNTY	TOTAL SHEETS	SHEET NO.
338	110TS-N	DUPAGE	133	39

CONTRACT NO. 62F19

ILLINOIS | FED. AID PROJECT

EROSION CONTROL NOTES

1) THIS PROJECT REQUIRES A U.S. ARMY CORPS OF ENGINEERS (USACE) 404 PERMIT THAT WILL BE SECURED BY THE DEPARTMENT. ALL CONDITIONS OF THE 404 PERMIT FOUND IN THE SPECIAL PROVISIONS, MUST BE FOLLOWED. AS A CONDITION OF THIS PERMIT, THE CONTRACTOR WILL NEED TO SUBMIT AN IN-STREAM WORK PLAN (INCLUDING WORK WITHIN WETLANDS) TO THE DEPARTMENT FOR APPROVAL. GUIDELINES ON ACCEPTABLE IN-STREAM WORK TECHNIQUES (INCLUDING WORK WITHIN WETLANDS) CAN BE FOUND ON THE USACE WEBSITE. THE USACE DEFINES AND DETERMINES IN-STREAM WORK. THE COST OF ALL MATERIALS AND LABOR NECCESARY TO COMPLY WITH THE ABOVE PROVISIONS TO PREPARE AND IMPLEMENT AN IN-STREAM WORK PLAN (INCLUDING WORK WITHIN WETLANDS) WILL NOT BE PAID FOR SEPARATELY, BUT SHALL BE CONSIDERED AS INCLUDED IN THE UNIT BID PRICES OF THE CONTRACT AND NO ADDITIONAL COMPENSATION WILL BE ALLOWED.

* 2) INSTALL PERIMETER EROSION BARRIER ALONG R.O.W. & TEMPORARY EASEMENTS. AS SHOWN ON PLANS. PERIMETER EROSION CONTROL SHALL BE PLACED 12 INCHES FROM THE R.O.W. OR EASEMENTS. THE PERIMETER EROSION BARRIER SHALL BE PLACED PRIOR TO THE INVOLVED AREA BEING DISTURBED.

3) EXCAVATION FOR THE INSTALLATION OF RIP RAP WILL BE PAID FOR AS "REMOVAL AND DISPOSAL OF UNSUITABLE MATERIAL" PER CU. YD.

* 4) INSTALL INLET FILTERS ON ALL OPEN STRUCTURES. INLET PROTECTION SHALL BE PLACED PRIOR TO THE INVOLVED AREA BEING DISTURBED.

* 5) INSTALL TREE PROTECTION PRIOR TO THE INVOLVED AREA BEING DISTURBED.

6) TEMPORARY EROSION CONTROL SEEDING IS TO BE PROVIDED AT ALL ERODIBLE BARE EARTH AREAS.

7) AT ANY AREA WHERE THERE IS NO PROPOSED GRADING, THE EXISTING GROUND COVER SHALL REMAIN.

8) THE EROSION CONTROL MEASURES SHALL BE IN ACCORDANCE WITH THE REQUIREMENTS OF THE STANDARD SPECIFICATIONS AND THE APPLICABLE STATE STANDARD FOR THE ENTIRE DURATION OF THE CONTRACT, OR UNTIL SUCH A TIME AS DIRECTED BY THE ENGINEER.

9) ALL ESC MEASURES WILL BE MAINTAINED IN ACCORDANCE WITH THE IDOT EROSION AND SEDIMENT CONTROL FIELD GUIDE FOR CONSTRUCTION INSPECTION AND IDOT'S BEST MANAGEMENT PRACTICES - MAINTENANCE GUIDE: (HTTP://WWW.IDOT.ILLINOIS.GOV/TRANSPORTATION-SYSTEM/ENVIRONMENT/EROSION-AND-SEDIMENT-CONTROL).

10) THE CONTRACTOR WILL ASSUME RESPONSIBILITY FOR MAINTENANCE OF ALL SOIL EROSION CONTROL DURING CONSTRUCTION.

11) THE CONTRACTOR SHALL CHECK ALL ESC MEASURES WEEKLY AND AFTER EACH RAINFALL, 0.5 INCHES OR GREATER IN A 24 HOUR PERIOD, OR EQUIVALENT SNOWFALL. ADDITIONALLY, DURING THE WINTER MONTHS, ALL MEASURES SHOULD BE CHECKED BY THE CONTRACTOR AFTER EACH SIGNIFICANT SNOWMELT.

12) THE CONTRACTOR SHOULD PROVIDE TO THE RE A PLAN TO ENSURE THAT A STABILIZED FLOW LINE WILL BE PROVIDED DURING STORM SEWER CONSTRUCTION. THE USE OF A STABILIZED FLOW LINE BETWEEN INSTALLED STORM SEWER AND OPEN DISTURBANCE WILL REDUCE THE POTENTIAL FOR THE OFFSITE DISCHARGE OF SEDIMENT-BEARING WATERS, ESPECIALLY WHEN RAIN IS FORECASTED, SO THAT FLOW WILL NOT ERODE. LACK OF APPROVED PLAN OR FAILURE TO COMPLY WILL RESULT IN AN ESC DEFICIENCY DEDUCTION.

13) ANY LOOSE MATERIAL DEPOSITED IN THE FLOW LINE OF DRAINAGE STRUCTURES, WHICH OBSTRUCTS THE NATURAL FLOW OF WATER, SHALL BE REMOVED AT THE CLOSE OF EACH WORKING DAY. PRIOR TO ACCEPTANCE OF THE IMPROVEMENT, ALL DRAINAGE STRUCTURES SHALL BE FREE OF DIRT AND DEBRIS. THIS WORK WILL NOT BE PAID FOR SEPARATELY, BUT SHALL BE CONSIDERED AS INCIDENTAL.

14) TEMPORARY OR PERMANENT STABILIZATION SHALL BE INITIATED IMMEDIATELY UPON COMPLETION OF DISTURBANCE OR IF THE WORK AREA IS TO BE LEFT UNDISTURBED FOR 14 DAYS OR MORE.

15) UNDER NO CIRCUMSTANCES SHALL THE CONTRACTOR PROLONG FINAL GRADING AND SHAPING SO THAT THE ENTIRE PROJECT CAN BE PERMANENTLY SEEDED AT ONE TIME.

16) EROSION CONTROL ITEMS ARE CONSIDERED TO BE A HIGH PRIORITY ON THIS CONTRACT. THE CONTRACTOR IS RESPONSIBLE FOR INSTALLATION OF ANY ADDITIONAL EROSION CONTROL MEASURES NECESSARY TO PREVENT EROSION AND SEDIMENTATION AS DETERMINED BY THE RE.

17) EROSION CONTROL ITEMS ARE CONSIDERED TO BE A HIGH PRIORITY ON THIS CONTRACT. THE CONTRACTOR IS RESPONSIBLE FOR INSTALLATION OF ANY ADDITIONAL EROSION CONTROL MEASURES NECESSARY TO PREVENT EROSION AND SEDIMENTATION AS DETERMINED BY THE RE.

18) "WETLANDS NO INTRUSION" SIGNAGE SHOULD ALSO BE PROVIDED AT THE BOUNDARY OF ALL UN-IMPACTED WETLANDS AND/OR WOUS. THE CONTRACTOR CAN BORROW THE SIGNS FROM THE BUREAU OF MAINTENANCE. INCLUDE TEMPORARY FENCING AND WETLAND SIGNAGE WITHIN THE EROSION AND SEDIMENT CONTROL STRATEGY.

* ITEMS TO BE INSTALLED BEFORE THE AREA IS DISTURBED.

TEMPORARY EROSION CONTROL SEQUENCE OF CONSTRUCTION

1. ESTABLISH TEMPORARY EROSION CONTROL MEASURES, INSTALL INLET FILETERS, INSTALL TREE PROTECTION, AND ERECT SILT FENCE ALONG SITE BOUNDARIES AS SHOWN ON PLAN PRIOR TO SOIL DISTURBANCE IN CURRENT STAGE OF CONSTRUCTION.
2. INSTALL DITCH CHECKS IMMEDIATELY AFTER DITCH DISTURBANCE STARTS.
3. INSTALL PERMANENT SEEDING BEFORE BEGINNING NEXT CONSTRUCTION STAGE.

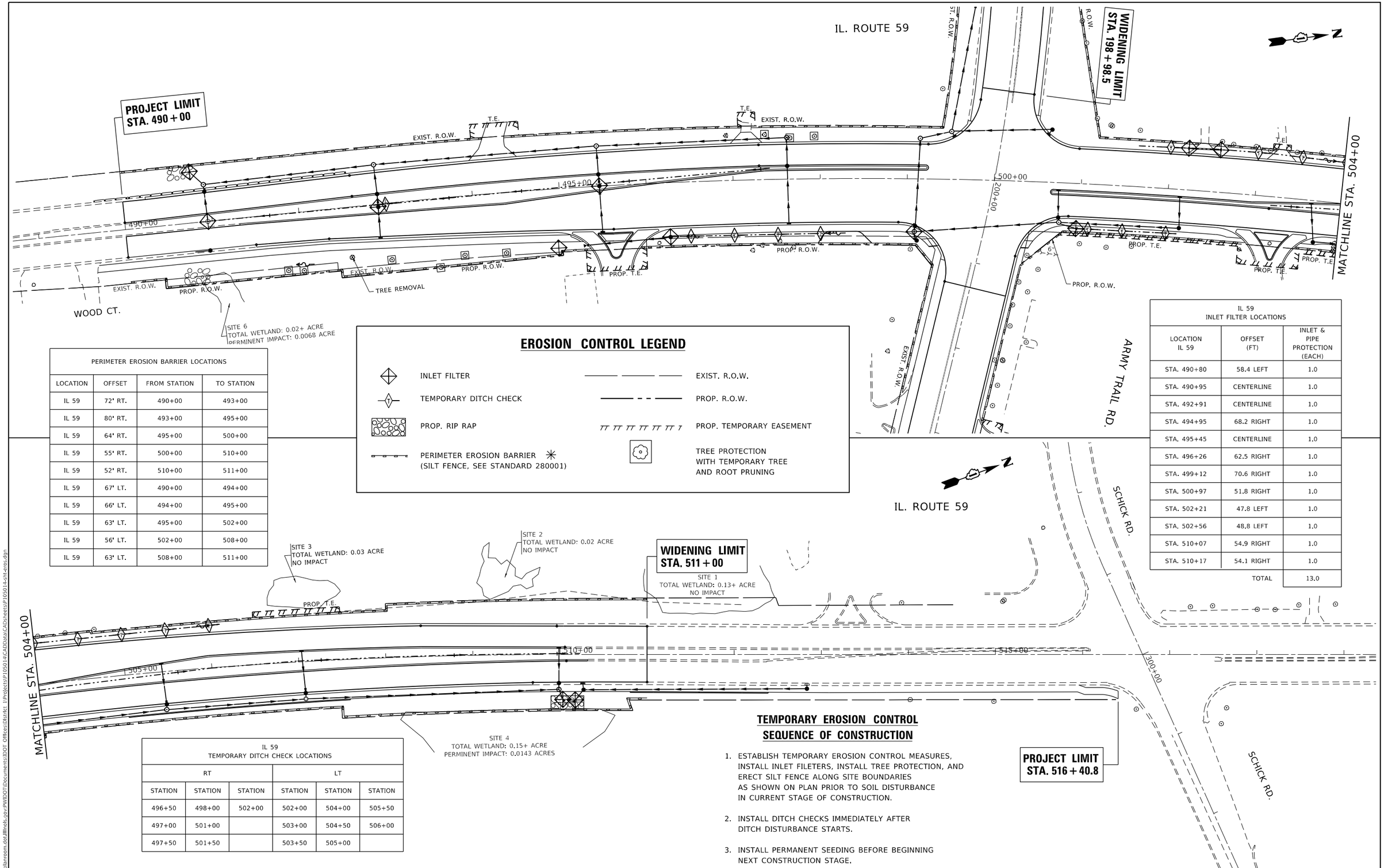

EROSION CONTROL LEGEND

- INLET FILTER
- TEMPORARY DITCH CHECK
- PROP. RIP RAP
- PERIMETER EROSION BARRIER (SILT FENCE, SEE STANDARD 280001)
- EXIST. R.O.W.
- PROP. R.O.W.
- PROP. TEMPORARY EASEMENT
- TREE PROTECTION WITH TEMPORARY TREE AND ROOT PRUNING

PERIMETER EROSION BARRIER LOCATIONS			
LOCATION	OFFSET	FROM STATION	TO STATION
IL 59	72' RT.	490+00	493+00
IL 59	80' RT.	493+00	495+00
IL 59	64' RT.	495+00	500+00
IL 59	55' RT.	500+00	510+00
IL 59	52' RT.	510+00	511+00
IL 59	67' LT.	490+00	494+00
IL 59	66' LT.	494+00	495+00
IL 59	63' LT.	495+00	502+00
IL 59	56' LT.	502+00	508+00
IL 59	63' LT.	508+00	511+00

IL 59 INLET FILTER LOCATIONS		
LOCATION IL 59	OFFSET (FT)	INLET & PIPE PROTECTION (EACH)
STA. 490+80	58.4 LEFT	1.0
STA. 490+95	CENTERLINE	1.0
STA. 492+91	CENTERLINE	1.0
STA. 494+95	68.2 RIGHT	1.0
STA. 495+45	CENTERLINE	1.0
STA. 496+26	62.5 RIGHT	1.0
STA. 499+12	70.6 RIGHT	1.0
STA. 500+97	51.8 RIGHT	1.0
STA. 502+21	47.8 LEFT	1.0
STA. 502+56	48.8 LEFT	1.0
STA. 510+07	54.9 RIGHT	1.0
STA. 510+17	54.1 RIGHT	1.0
	TOTAL	13.0

IL 59 TEMPORARY DITCH CHECK LOCATIONS					
RT			LT		
STATION	STATION	STATION	STATION	STATION	STATION
496+50	498+00	502+00	502+00	504+00	505+50
497+00	501+00		503+00	504+50	506+00
497+50	501+50		503+50	505+00	

TEMPORARY EROSION CONTROL SEQUENCE OF CONSTRUCTION

1. ESTABLISH TEMPORARY EROSION CONTROL MEASURES, INSTALL INLET FILETERS, INSTALL TREE PROTECTION, AND ERECT SILT FENCE ALONG SITE BOUNDARIES AS SHOWN ON PLAN PRIOR TO SOIL DISTURBANCE IN CURRENT STAGE OF CONSTRUCTION.
2. INSTALL DITCH CHECKS IMMEDIATELY AFTER DITCH DISTURBANCE STARTS.
3. INSTALL PERMANENT SEEDING BEFORE BEGINNING NEXT CONSTRUCTION STAGE.

MODEL: Default
FILE NAME: pw:\\ularroom.dot.illinois.gov:PWIDOT\Documents\IDOT Offices\District 1\Projects\P105014\CADData\CADsheets\P105014-sht-eros.dgn

USER NAME = kalorm	DESIGNED -	REVISED - RK 05/03/2019	STATE OF ILLINOIS DEPARTMENT OF TRANSPORTATION
	DRAWN -	REVISED -	
PLOT SCALE = 100.0000 ' / in.	CHECKED -	REVISED -	
PLOT DATE = 4/30/2019	DATE -	REVISED -	

EROSION & SEDIMENT CONTROL PLAN
IL. ROUTE 59 (SUTTON ROAD) AT ARMY TRAIL ROAD

SCALE: 1"=50' | SHEET OF SHEETS | STA. TO STA.

F.A.P. RTE.	SECTION	COUNTY	TOTAL SHEETS	SHEET NO.
338	110TS-N	DUPAGE	133	41
		CONTRACT NO. 62F19		
		ILLINOIS	FED. AID PROJECT	

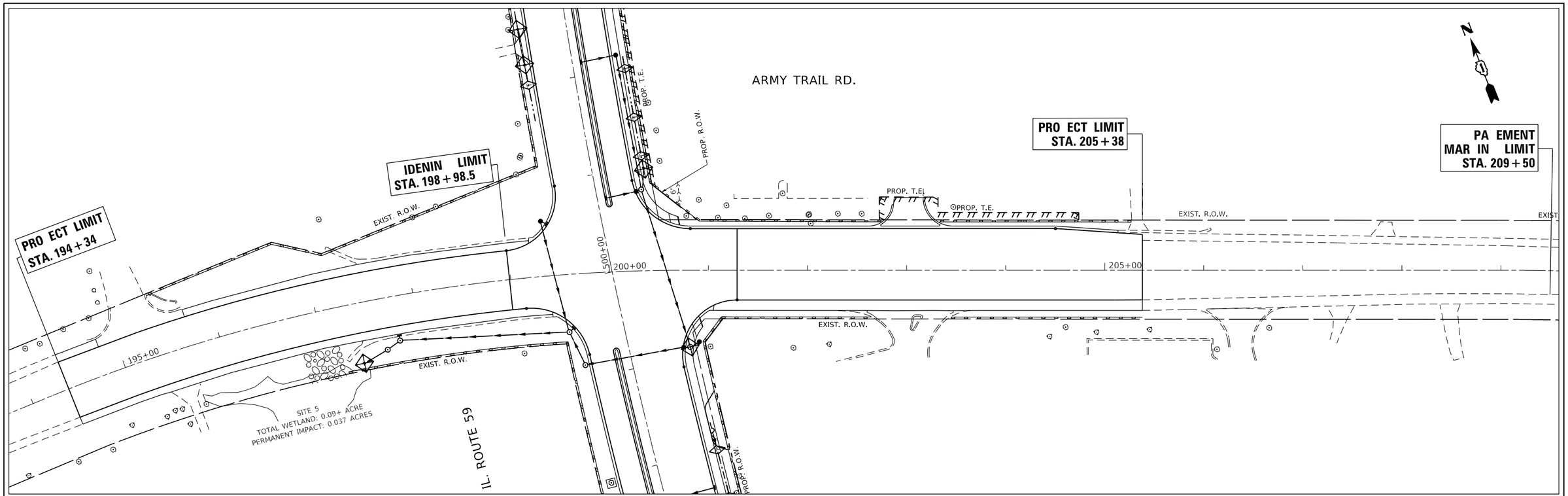

EROSION CONTROL LE END

SYM OL	DESCRIPTION
	INLET FILTER
	TEMPORARY DITCH CHECK
	PROP. RIP RAP
	PERIMETER EROSION BARRIER (SILT FENCE, SEE STANDARD 280001)
	EXIST. R.O.W.
	PROP. R.O.W.
	PROP. TEMPORARY EASEMENT
	TREE PROTECTION WITH TEMPORARY TREE AND ROOT PRUNING

ARMY TRAIL RD.
INLET FILTER LOCATIONS

LOCATION ARMY TRAIL RD.	OFFSET (FT)	INLET & PIPE PROTECTION (EACH)
STA. 197+38	61.1 RIGHT	1.0
	TOTAL	1.0

ARMY TRAIL RD.
TEMPORARY DITCH CHECK LOCATIONS

STATION
201+56
205+67

PERIMETER EROSION BARRIER LOCATIONS

LOCATION	OFFSET	FROM STATION	TO STATION
ARMY TRAIL RD.	70' RT.	197+00	200+00
ARMY TRAIL RD.	50' LT.	200+00	205+00

TEMPORARY EROSION CONTROL SE UENCE OF CONSTRUCTION

1. ESTABLISH TEMPORARY EROSION CONTROL MEASURES, INSTALL INLET FILETERS, INSTALL TREE PROTECTION, AND ERECT SILT FENCE ALONG SITE BOUNDARIES AS SHOWN ON PLAN PRIOR TO SOIL DISTURBANCE IN CURRENT STAGE OF CONSTRUCTION.
2. INSTALL DITCH CHECKS IMMEDIATELY AFTER DITCH DISTURBANCE STARTS.
3. INSTALL PERMANENT SEEDING BEFORE BEGINNING NEXT CONSTRUCTION STAGE.

MODEL: Default
FILE NAME: pw:\\uhanroom.dot.illinois.gov:PWIDOT\Documents\IDOT Offices\District 1\Projects\P105014\CADData\CADsheets\P105014-sht-eros.dgn

USER NAME = kalorm	DESIGNED -	REVISED -	
	DRAWN -	REVISED -	
PLOT SCALE = 100.0000 ' / in.	CHECKED -	REVISED -	
PLOT DATE = 3/21/2019	DATE -	REVISED -	

STATE OF ILLINOIS
DEPARTMENT OF TRANSPORTATION

EROSION & SEDIMENT CONTROL PLAN
ARMY TRAIL ROAD AT IL. ROUTE 59 (SUTTON ROAD)

SCALE: 1"=50' | SHEET OF SHEETS | STA. TO STA.

F.A.P. RTE.	SECTION	COUNTY	TOTAL SHEETS	SHEET NO.
338	110TS-N	DUPAGE	133	42
		CONTRACT NO. 62F19		
		ILLINOIS	FED. AID PROJECT	

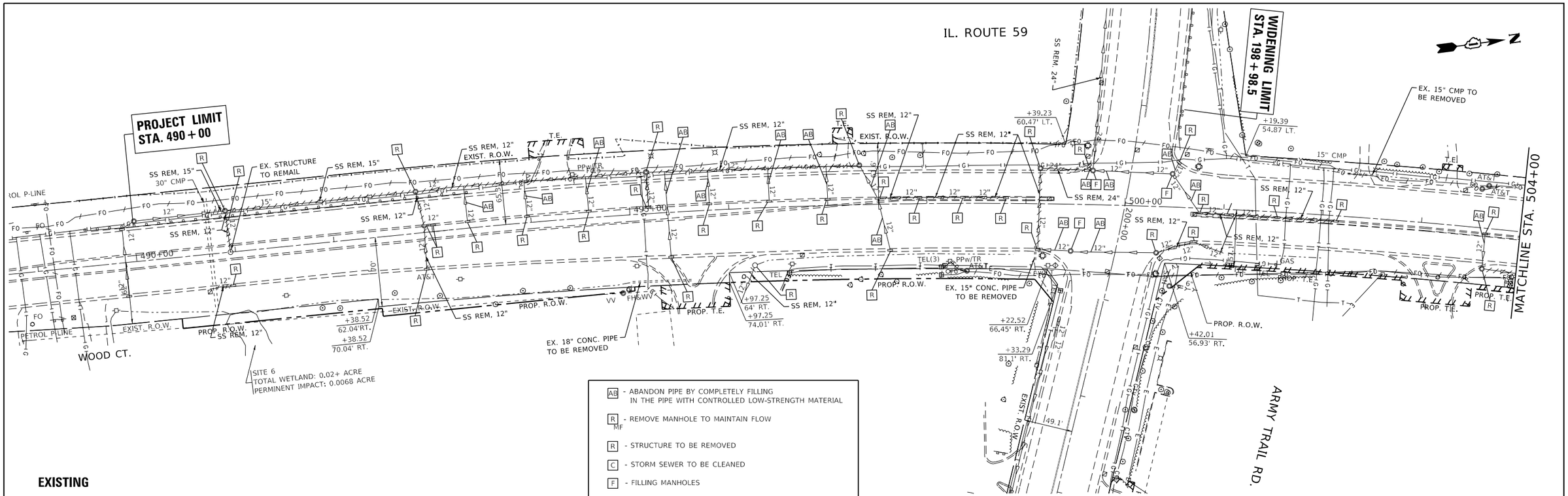

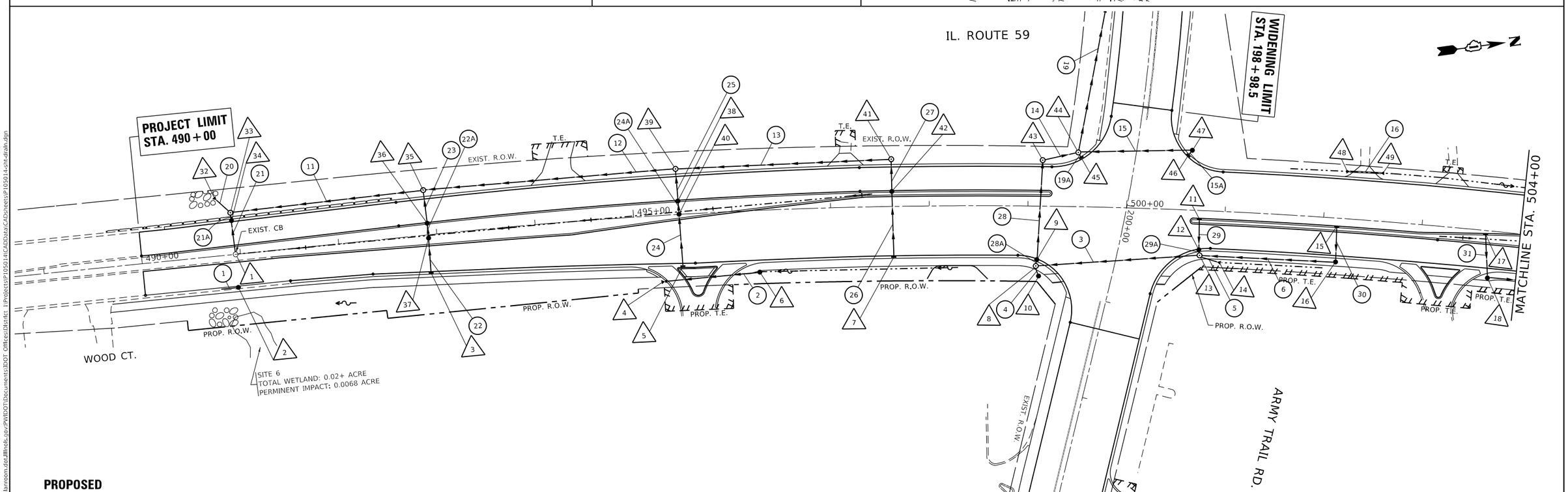

USER NAME = kalorm	DESIGNED -	REVISED - RK 05/03/2019
	DRAWN -	REVISED -
PLOT SCALE = 100.0000 ' / in.	CHECKED -	REVISED -
PLOT DATE = 4/29/2019	DATE -	REVISED -

STATE OF ILLINOIS
DEPARTMENT OF TRANSPORTATION

DRAINAGE AND UTILITY PLAN
IL. ROUTE 59 (SUTTON ROAD) AT ARMY TRAIL ROAD

SCALE: 1"=50' | SHEET OF SHEETS | STA. TO STA.

F.A.P. RTE.	SECTION	COUNTY	TOTAL SHEETS	SHEET NO.
338		DUPAGE	133	43
		CONTRACT NO.		
	ILLINOIS	FED. AID PROJECT		

MODEL: Default
FILE NAME: pw:\\dbarroom.dot.illinois.gov:PWIDOT\Documents\IDOT Offices\District 1\Projects\P105014\CADData\CADsheets\P105014-sht-draln.dgn

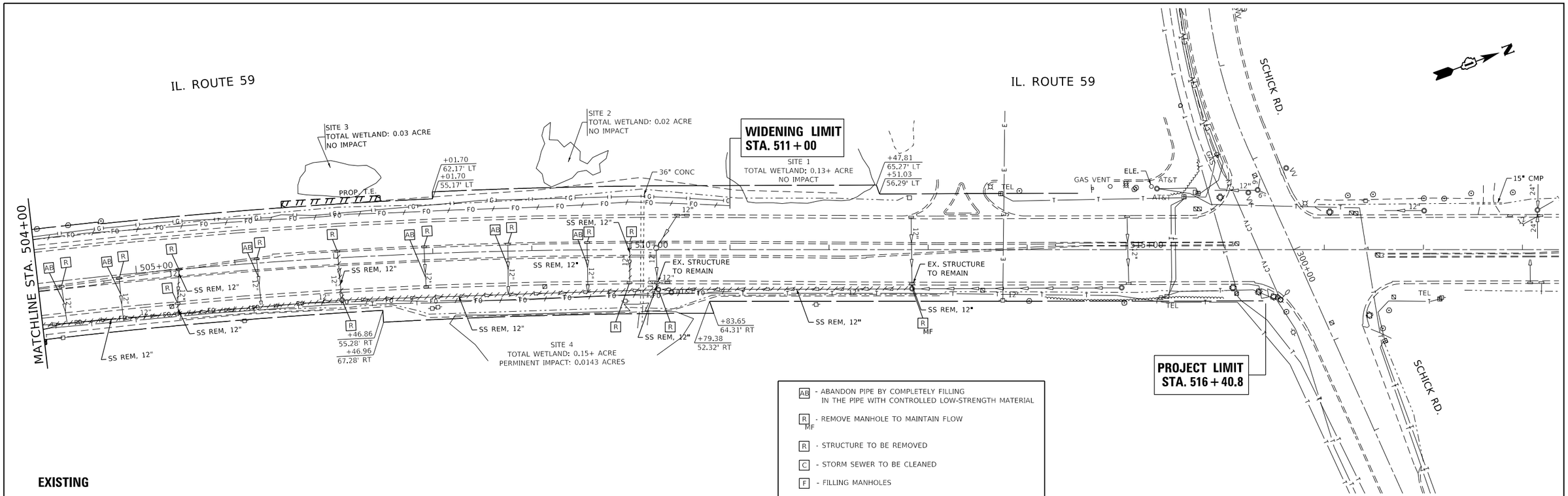

EXISTING

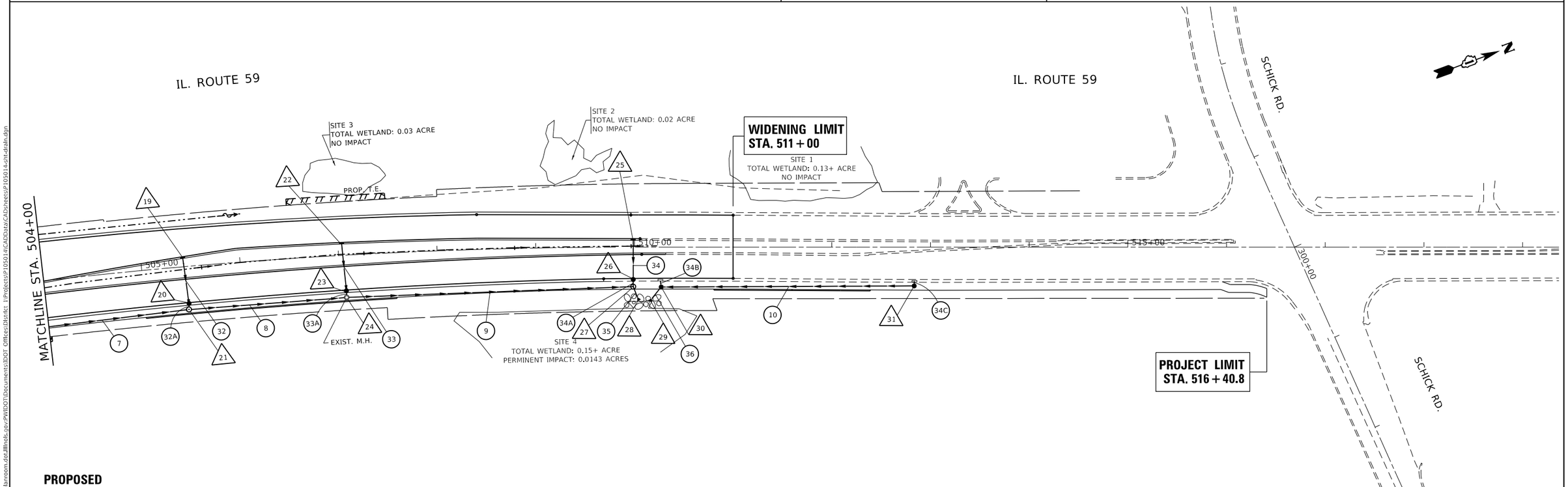

PROPOSED

MODEL: Default
FILE NAME: pw:\\dbarroom.dot.illinois.gov:PWIDOT\Documents\IDOT Offices\District 1\Projects\P105014\CADData\CADsheets\P105014-sht-draln.dgn

USER NAME = kalorm	DESIGNED -	REVISED - RK 05/03/2019	STATE OF ILLINOIS DEPARTMENT OF TRANSPORTATION	DRAINAGE AND UTILITY PLAN IL. ROUTE 59 (SUTTON ROAD) AT ARMY TRAIL ROAD	F.A.P. RTE.	SECTION	COUNTY	TOTAL SHEETS	SHEET NO.
	DRAWN -	REVISED -			338		DUPAGE	133	44
PLOT SCALE = 100.0000 ' / in.	CHECKED -	REVISED -					CONTRACT NO.		
PLOT DATE = 4/30/2019	DATE -	REVISED -		SCALE: 1"=50' SHEET OF SHEETS STA. TO STA.		ILLINOIS	FED. AID PROJECT		

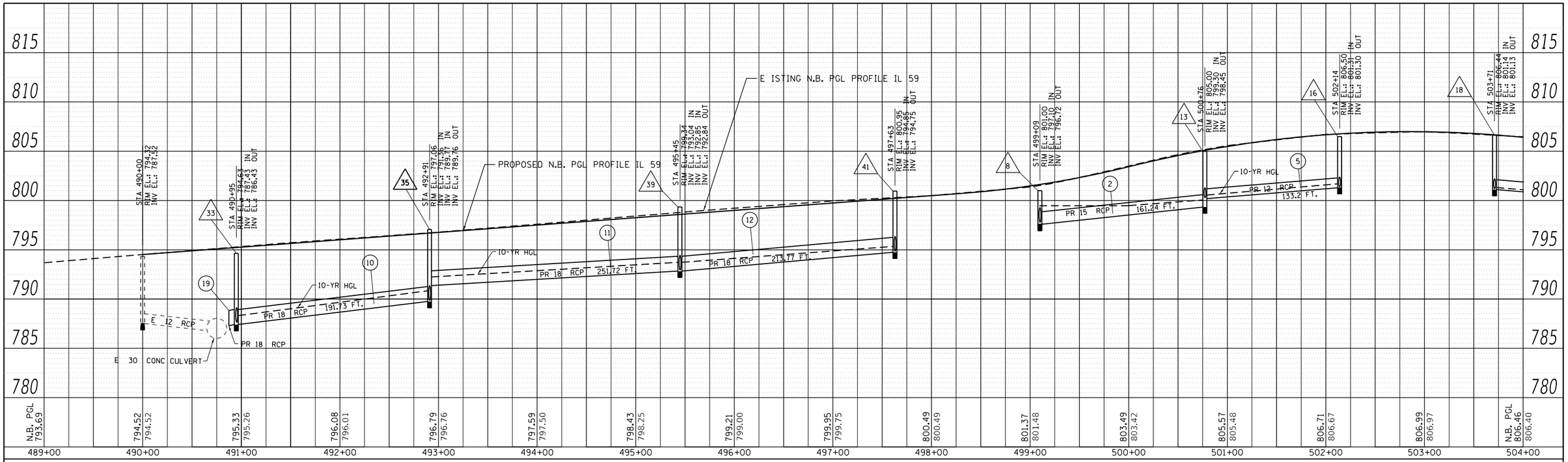

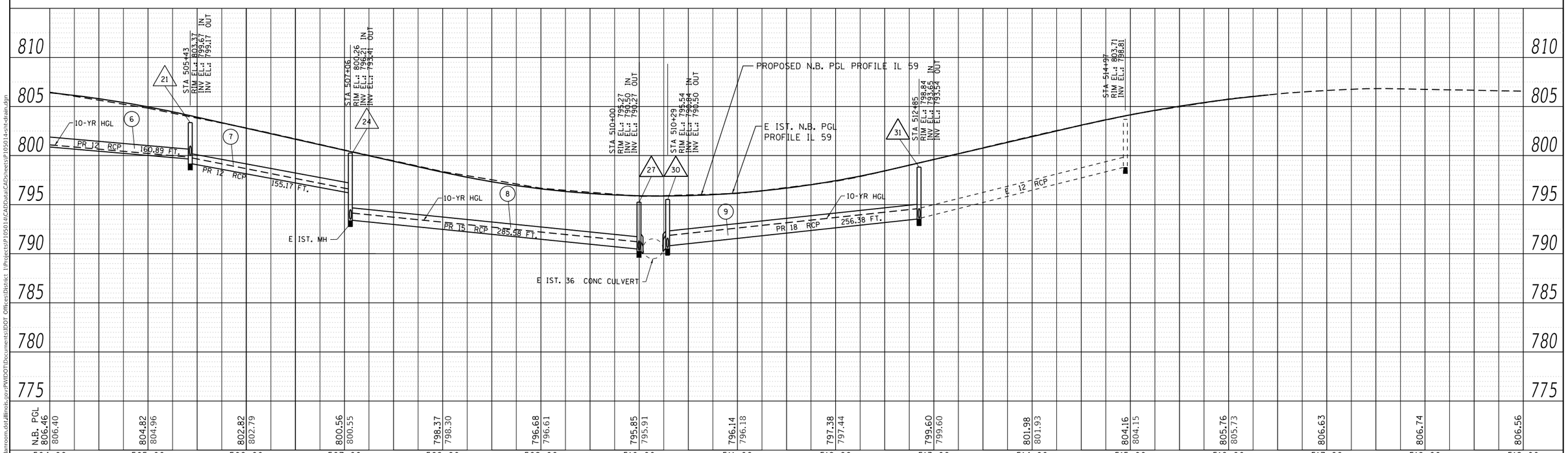

PLAN
NOTE BOOK NO.
SURVEYED
PLOTTED
ALIGNMENT CHECKED
RT. OF WAY CHECKED
CADD FILE NAME
BY
DATE

PROFILE
NOTE BOOK NO.
SURVEYED
PLOTTED
GRADES CHECKED
B.M. NOTED
STRUCTURE NOTAT'NS CHKD
BY
DATE

MODEL: Default
FILE NAME: pw:\\planroom.dot.illinois.gov:PWIDOT\Documents\IDOT Offices\District 1\Projects\P105014\CADData\CADsheets\P105014-rit-drain.dgn

USER NAME = kalorm	DESIGNED -	REVISED -	
	DRAWN -	REVISED -	
PLOT SCALE = 100.0000 ' / in.	CHECKED -	REVISED -	
PLOT DATE = 3/21/2019	DATE -	REVISED -	

STATE OF ILLINOIS
DEPARTMENT OF TRANSPORTATION

DRAINAGE PROFILE
IL. ROUTE 59 (SUTTON ROAD) AT ARMY TRAIL ROAD

SCALE: 1"= 50'H 5'V | SHEET OF SHEETS | STA. TO STA.

F.A.P. RTE.	SECTION	COUNTY	TOTAL SHEETS	SHEET NO.
338	110TS-N	DUPAGE	133	45

CONTRACT NO. 62F19

ILLINOIS | FED. AID PROJECT

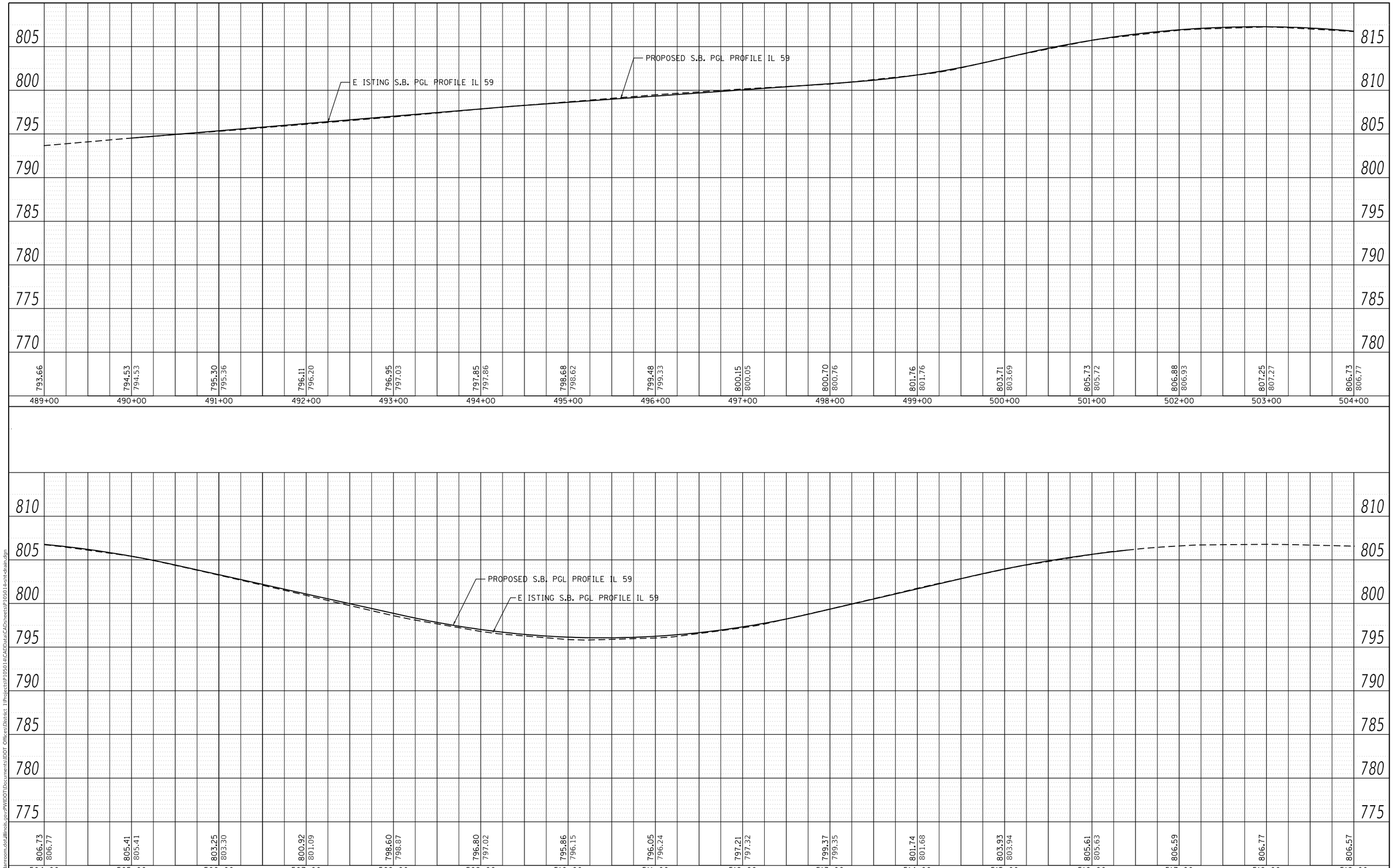

PLAN
NOTE BOOK NO.
SURVEYED
PLOTTED
ALIGNMENT CHECKED
RT. OF WAY CHECKED
CADD FILE NAME
BY
DATE

PROFILE
NOTE BOOK NO.
SURVEYED
PLOTTED
GRADES CHECKED
B.M. NOTED
STRUCTURE NOTATIONS CHKD
BY
DATE

MODEL: Default
FILE NAME: pw:\\planroom.dot.illinois.gov:PWIDOT\Documents\IDOT Offices\District 1\Projects\P105014\CADData\CADsheets\P105014-int-drain.dgn

USER NAME = kalorm	DESIGNED -	REVISED -	
	DRAWN -	REVISED -	
PLOT SCALE = 100.0000 ' / in.	CHECKED -	REVISED -	
PLOT DATE = 3/21/2019	DATE -	REVISED -	

STATE OF ILLINOIS
DEPARTMENT OF TRANSPORTATION

DRAINAGE PROFILE
IL. ROUTE 59 (SUTTON ROAD) AT ARMY TRAIL ROAD

SCALE: 1"= 50'H 5'V | SHEET OF SHEETS | STA. TO STA.

F.A.P. RTE.	SECTION	COUNTY	TOTAL SHEETS	SHEET NO.
338	110TS-N	DUPAGE	133	46
		CONTRACT NO. 62F19		
		ILLINOIS FED. AID PROJECT		

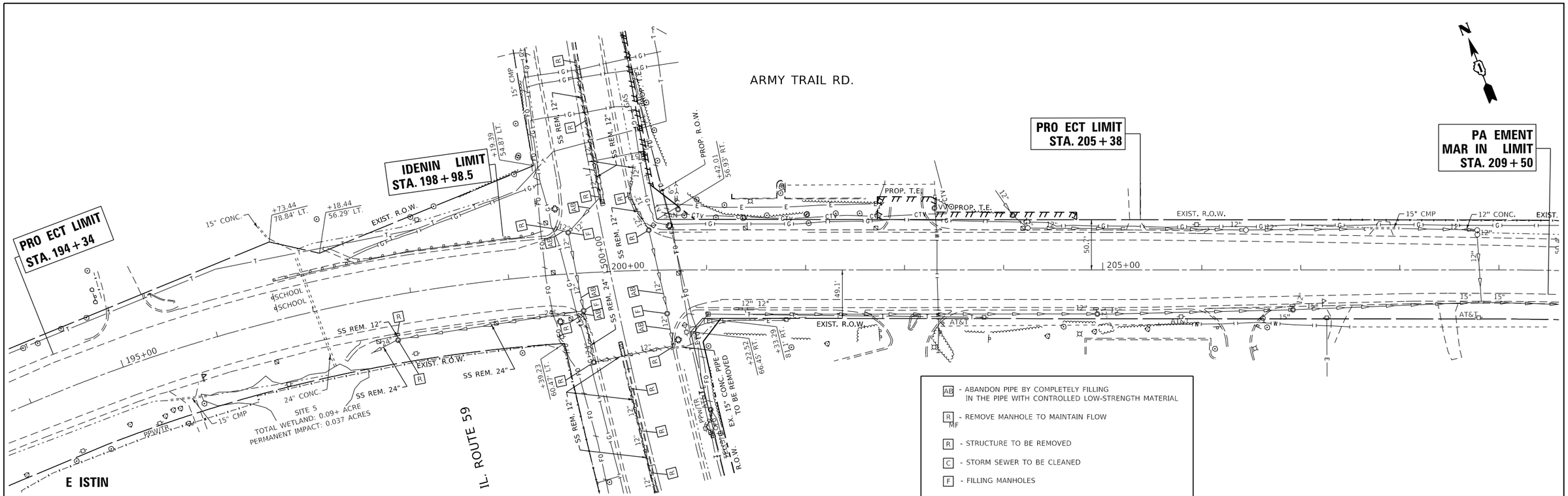

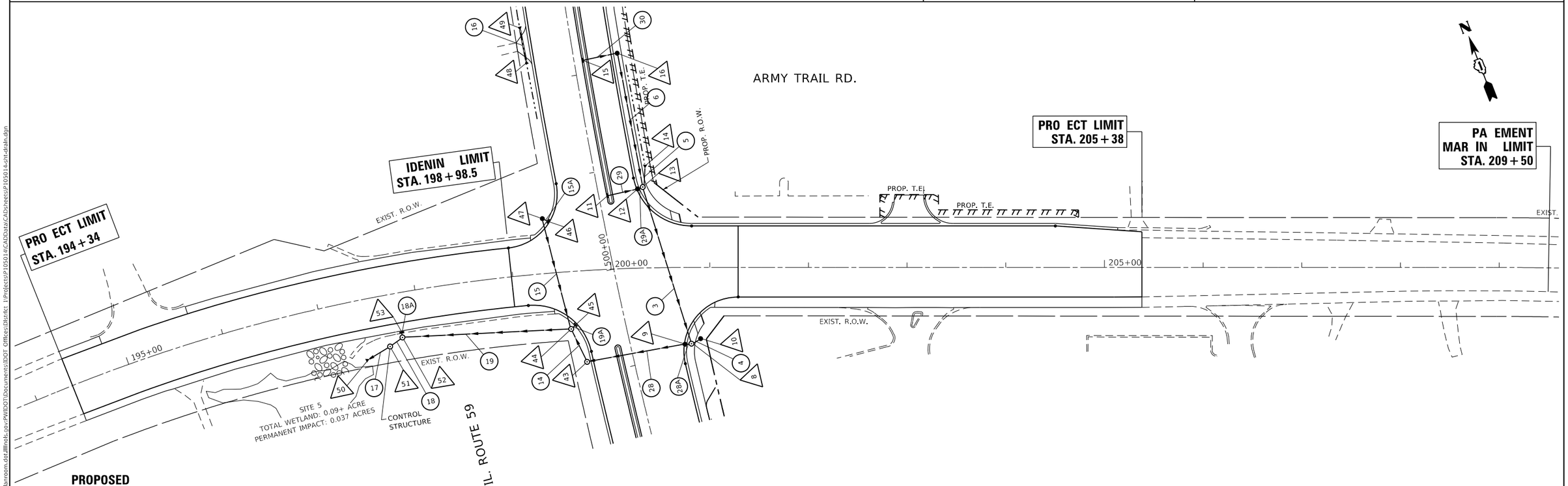

PROPOSED

USER NAME = kalorm	DESIGNED -	REVISED -	
	DRAWN -	REVISED -	
PLOT SCALE = 100.0000 ' / in.	CHECKED -	REVISED -	
PLOT DATE = 3/21/2019	DATE -	REVISED -	

STATE OF ILLINOIS
DEPARTMENT OF TRANSPORTATION

DRAINAGE AND UTILITY PLAN
ARMY TRAIL ROAD AT IL. ROUTE 59 (SUTTON ROAD)

SCALE: 1"=50' | SHEET OF SHEETS | STA. TO STA.

F.A.P. RTE.	SECTION	COUNTY	TOTAL SHEETS	SHEET NO.
338		DUPAGE	133	47
		CONTRACT NO.		
	ILLINOIS	FED. AID PROJECT		

MODEL: Default
FILE NAME: pw:\\dbarroom.dot.illinois.gov:PWIDOT\Documents\IDOT Offices\District 1\Projects\P105014\CADData\CADsheets\P105014-sht-draln.dgn

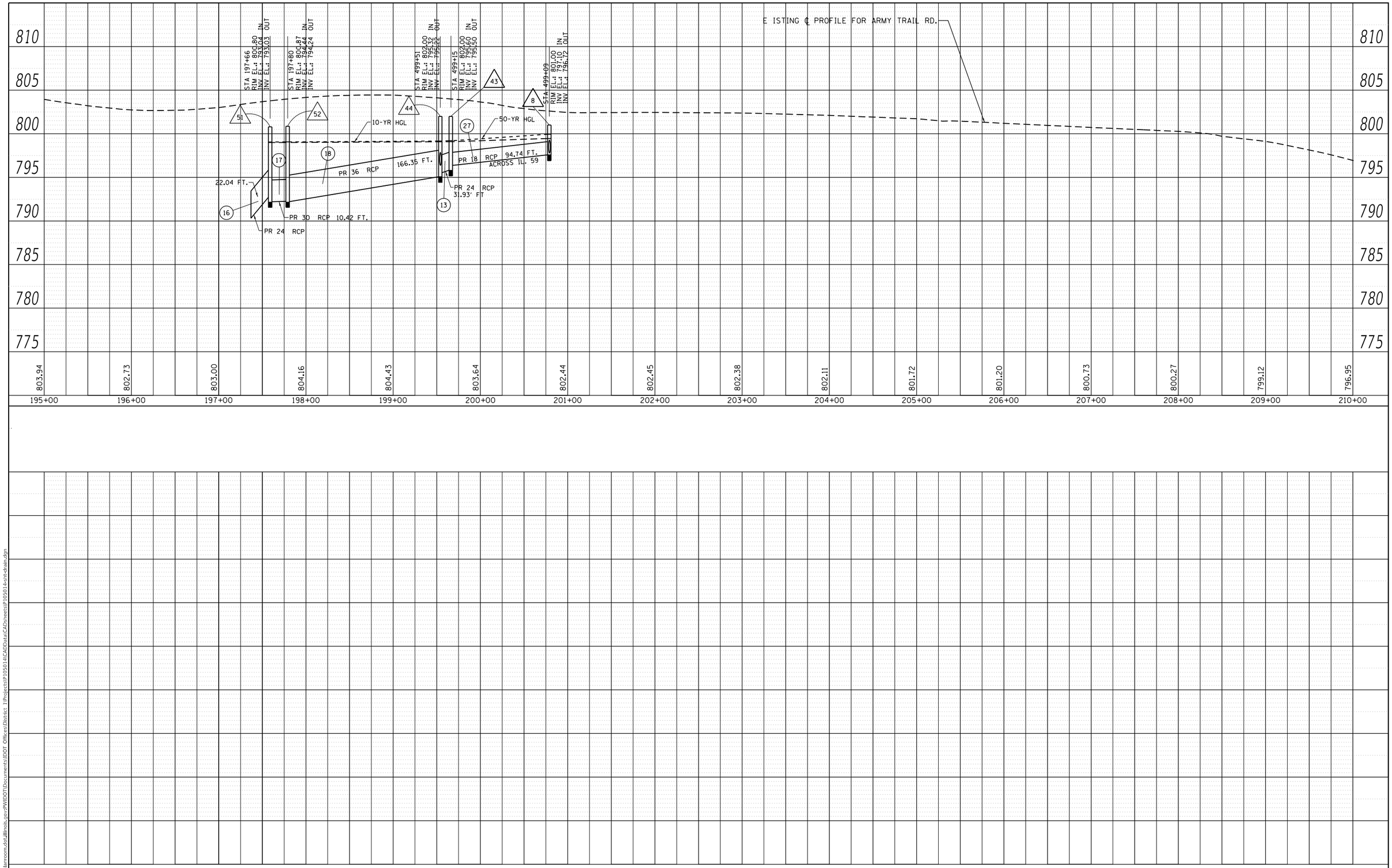

PLAN
SURVEYED
PLOTTED
ALIGNMENT CHECKED
RT. OF WAY CHECKED
CADD FILE NAME
NOTE BOOK NO.
BY
DATE

PROFILE
SURVEYED
PLOTTED
GRADES CHECKED
B.M. NOTED
STRUCTURE NOTATIONS CHKD
NOTE BOOK NO.
BY
DATE

MODEL: Default
FILE NAME: pw:\\planroom.dot.illinois.gov:PWIDOT\Documents\IDOT Offices\District 1\Projects\P105014\CADData\CADsheets\P105014-int-drain.dgn

USER NAME = kalorm	DESIGNED -	REVISED -
	DRAWN -	REVISED -
PLOT SCALE = 100.0000 ' / in.	CHECKED -	REVISED -
PLOT DATE = 3/21/2019	DATE -	REVISED -

STATE OF ILLINOIS
DEPARTMENT OF TRANSPORTATION

DRAINAGE PROFILE
ARMY TRAIL ROAD AT IL. ROUTE 59 (SUTTON ROAD)

SCALE: 1" = 50'H 5'V | SHEET OF SHEETS | STA. TO STA.

F.A.P. RTE.	SECTION	COUNTY	TOTAL SHEETS	SHEET NO.
338	110TS-N	DUPAGE	133	48

CONTRACT NO. 62F19

ILLINOIS | FED. AID PROJECT

DRAINAGE STRUCTURES

ST- 1 (EXISTING)
4' DIA. CATCH BASIN TYPE A
TYPE 1 FRAME, OPEN LID
STA. 490+91, 0.0' OFFSET
RIM 795.30
INV. 791.60

ST- 2
4' DIA. CATCH BASIN TYPE A
TYPE 24 FRAME AND GRATE
STA. 490+95, 33.6' RT
INV. 787.46
RIM 794.69

ST- 3
INLET TYPE A
TYPE 24 FRAME AND GRATE
STA. 492+91, 38.4' RT
INV. 791.79
RIM 796.19

ST- 4
18" CONCRETE FLARED END SECTION
STA. 495+28, 68.2' RT
INV. 794.55

ST- 5
INLET TYPE A
TYPE 24 FRAME AND GRATE
STA. 495+45, 52.5' RT
RIM 797.94
INV. 794.14

FLAT TOP
ST- 6
4' DIA. CATCH BASIN TYPE A
TYPE 8 GRATE
STA. 496+26, 62.5' RT
INV. 795.29
RIM 798.88

ST- 7
IINLET TYPE A
TYPE 24 FRAME AND GRATE
STA. 497+63, 51.0' RT
INV. 795.56
RIM 799.60

FLAT TOP
ST- 8
5' DIA. MANHOLE TYPE A
TYPE 1 FRAME, CLOSED LID
STA. 499+09, 60.7' RT
INV. 797.10 (N)
INV. 796.72 (W)
INV. 796.74 (NE)
RIM 801.00

FLAT TOP
ST- 9
4' DIA. CATCH BASIN TYPE A
TYPE 24 FRAME AND GRATE
STA. 499+10, 54.3' RT
INV. 796.70 (E)
INV. 796.66 (W)
RIM 800.91

ST- 10
CATCH BASIN TYPE C
TYPE 8 GRATE
STA. 499+12, 70.6' RT
INV. 796.80
RIM 799.59

ST- 11
INLET TYPE A
TYPE 23 FRAME AND GRATE
STA. 500+74, 8.7' LT
INV. 799.71
RIM 805.70

ST- 12
4' DIA. CATCH BASIN TYPE A
TYPE 24 FRAME AND GRATE
STA. 500+75, 40.1' RT
INV 799.42 (W)
INV. 799.41 (E)
RIM 804.58

FLAT TOP
ST- 13
5' DIA. MANHOLE TYPE A
TYPE 1 FRAME, CLOSED LID
STA. 500+76, 45.5' RT
INV. 799.30 (N)
INV. 798.45 (S)
INV. 799.40 (W)
INV. 801.42 (NE)
RIM 805.00

ST- 14
12" CONCRETE FLARED END SECTION
STA. 500+97, 51.8' RT
INV. 804.40

ST- 15
INLET TYPE A
TYPE 23 FRAME AND GRATE
STA. 502+14, 8.9' LT
INV. 802.19
RIM 806.59

ST- 16
4' DIA. CATCH BASIN TYPE A
TYPE 1 FRAME, CLOSED LID
STA. 502+14, 44.4' RT
INV. 801.31 (W)
INV. 801.30 (S)
RIM 806.50

ST- 17
INLET TYPE A
TYPE 23 FRAME AND GRATE
STA. 503+65, 3.7' LT
INV. 801.76
RIM 806.58

ST- 18
4' DIA. CATCH BASIN TYPE A
TYPE 1 FRAME, CLOSED LID
STA. 503+71, 47.7' RT
INV. 801.14 (W)
INV. 801.13 (N)
RIM 806.44

ST- 19
INLET TYPE A
TYPE 23 FRAME AND GRATE
STA. 505+42, 9.4' LT
INV. 799.65
RIM 804.37

FLAT TOP
ST- 20
4' DIA. CATCH BASIN TYPE A
TYPE 24, FRAME AND GRATE
STA. 505+45, 38.0' RT
INV. 799.19 (E)
INV. 799.20 (W)
RIM 804.06

FLAT TOP
ST- 21
5' DIA. MANHOLE TYPE A
TYPE 1 FRAME, CLOSED LID
STA. 505+43, 43.6' RT
INV. 799.67 (S)
INV. 799.17 (N)
INV. 799.18 (W)
RIM 803.37

ST- 22
INLET TYPE A
TYPE 23 FRAME AND GRATE
STA. 507+04, 12.3' LT
INV. 796.70
RIM 800.91

FLAT TOP
ST- 23
4' DIA. CATCH BASIN TYPE A
TYPE 24 FRAME AND GRATE
STA. 507+06, 36.5' RT
INV. 796.23 (E)
INV. 796.24 (W)
RIM 800.08

ST- 24 (EXISTING)
5' DIA. MANHOLE TYPE A
TYPE 1 FRAME, CLOSED LID
STA. 507+06, 42.8' RT
RIM 800.26
INV. 796.21 (S)
INV. 793.41 (N)
INV. 796.06 (W)

ST- 25
INLET TYPE A
TYPE 23 FRAME AND GRATE
STA. 510+00, 7.8' LT
INV. 790.70
RIM 796.13

ST- 26
4' DIA. CATCH BASIN TYPE A
TYPE 24 FRAME AND GRATE
STA. 510+00, 33.1' RT
INV. 790.33 (W)
INV. 790.32 (E)
RIM 795.50

FLAT TOP
ST- 27
5' DIA. MANHOLE TYPE A
TYPE 1 FRAME, CLOSED LID
STA. 510+00, 40.1' RT
INV. 790.50 (S)
INV. 790.27 (NE)
INV. 790.28 (W)
RIM 795.27

ST- 28
15" FLARED CONCRETE END SECTION
STA. 510+07, 54.9' RT
INV. 790.19

ST- 29
18" FLARED CONCRETE END SECTION
STA. 510+16, 54.2' RT
INV. 790.42

FLAT TOP
ST- 30
4' DIA. CATCH BASIN TYPE A
TYPE 1 FRAME, CLOSED LID
STA. 510+29, 40.5' RT
INV. 790.84 (N)
INV. 790.50 (SE)
INV. 790.93 (W)
RIM 795.54

FLAT TOP
ST- 31
4' DIA. CATCH BASIN TYPE A
TYPE 1 FRAME, CLOSED LID
STA. 512+85, 39.3' RT
INV. 793.65 (N)
INV. 793.54 (S)
INV. 794.35 (W)
RIM 798.84

ST- 32
18" FLARED CONCRETE END SECTION
STA. 490+80, 58.4' LT
INV. 786.99

ST- 33
5' DIA. MANHOLE TYPE A
TYPE 1 FRAME, CLOSED LID
STA. 490+95, 42.4' LT
INV. 787.43 (N)
INV. 786.43 (SW)
INV. 788.20 (E)
RIM 794.63

FLAT TOP
ST- 34
4' DIA. CATCH BASIN TYPE A
TYPE 24 FRAME AND GRATE
STA. 490+95, 34.3' LT
INV. 788.24 (W)
INV. 790.32 (E)
RIM 794.89

ST- 35
5' DIA. MANHOLE TYPE A
TYPE 1 FRAME, CLOSED LID
STA. 492+91, 45.6' LT
INV. 791.36 (N)
INV. 789.77 (E)
INV. 789.76 (S)
RIM 797.06

ST- 36
4' DIA. CATCH BASIN TYPE A
TYPE 23 FRAME AND GRATE
STA. 492+91, 11.8' LT
INV. 790.41 (E)
INV. 790.40 (W)
RIM 796.87

ST- 37
4' DIA. CATCH BASIN TYPE A
TYPE 1 FRAME, OPEN LID
STA. 492+91, 0.0' OFFSET
INV. 790.67 (E)
INV. 790.66 (W)
RIM 796.98

ST- 38
4' DIA. CATCH BASIN TYPE A
TYPE 23 FRAME AND GRATE
STA. 495+45, 13.7' LT
INV. 793.41 (E)
INV. 793.40 (W)
RIM 798.95

ST- 39
5' DIA. MANHOLE TYPE A
TYPE 1 FRAME, CLOSED LID
STA. 495+45, 46.2' LT
INV. 793.04 (N)
INV. 792.84 (S)
INV. 792.83 (E)
RIM 799.34

ST- 40
4' DIA. CATCH BASIN TYPE A
TYPE 1 FRAME, OPEN LID
STA. 495+45, 0.0' OFFSET
INV. 793.64 (E)
INV. 793.63 (W)
RIM 799.06

ST- 41
5' DIA. MANHOLE TYPE A
TYPE 1 FRAME, CLOSED LID
STA. 497+63, 47.9' LT
INV. 794.76 (E)
INV. 794.75 (S)
RIM 800.95

ST- 42
4' DIA. CATCH BASIN TYPE A
TYPE 23 FRAME AND GRATE
STA. 497+63, 15.4' LT
INV. 794.96 (E)
INV. 794.95 (W)
RIM 800.50

ST- 43
5' DIA. MANHOLE TYPE A
TYPE 1 FRAME, CLOSED LID
STA. 499+15, 46.6' LT
INV. 795.60 (E)
INV. 795.50 (N)
RIM 802.00

FLAT TOP
ST- 44
6' DIA. MANHOLE TYPE A
TYPE 1 FRAME, CLOSED LID
STA. 499+51, 55' LT
INV. 795.32 (S)
INV. 795.22 (NW)
INV. 798.00 (N)
INV. 798.37 (NE)
RIM 802.00

ST- 45
IINLET TYPE A
TYPE 24 FRAME AND GRATE
STA. 199+61, 54.0' LT
INV. 798.50
RIM 802.68

ST- 46
INLET TYPE A
TYPE 24 FRAME AND GRATE
STA. 199+48, 52.3' RT
INV. 800.65
RIM 805.82

FLAT TOP
ST- 47
4' CATCH BASIN TYPE A
TYPE 8 GRATE
STA. 500+64, 60.6' LT
INV. 800.61 (SE)
INV. 800.60 (S)
RIM 804.78

ST- 48
12" CONCRETE FLARED END SECTION
STA 502+26, 47.8' LT
INV. 805.26

ST- 49
12" CONCRETE FLARED END SECTION
STA 502+55, 48.8' LT
INV. 805.42

ST- 50
24" CONCRETE FLARED END SECTION
STA. 197+38, 61.09' RT
INV. 792.70

ST- 51
6' DIA. MANHOLE,
INLINE DETENTION CONTROL STRUCTURE
2 TYPE 1 FRAME, CLOSED LID
STA. 197+66, 52' LT
INV. 793.04 (NE)
INV. 793.03 (SW)
RIM 800.80

FLAT TOP
ST- 52
5' DIA MANHOLE TYPE A
TYPE 1 FRAME, CLOSED LID
STA. 197+80, 45.2' LT
INV. 794.44 (SE)
INV. 794.24 (SW)
INV. 797.40 (N)
RIM 800.87

ST- 53
INLET TYPE A
TYPE 24 FRAME AND GRADE
STA. 197+80, 39+90 LT
INV. 797.43 (S)
RIM 802.45

NOTES:

1. ALL STRUCTURES ARE PROPOSED UNLESS OTHERWISE INDICATED.
2. ALL STATIONS/OFFSETS ARE FROM IL 59 AND ARMY TRAIL RD. ~ UNLESS OTHERWISE NOTED
3. PIPE UNDERDRAINS TYPE 2 SHALL BE INSTALLED ACCORDING TO SECTION 601 OF THE SSRBC AND STANDARD 601001-05. TOP OF PIPE UNDERDRAINS SHALL BE PLACED MINIMUM 6" BELOW THE AGGREGATE SUBGRADE IMPROVEMENT LAYER. THE COST OF MAKING PIPE UNDERDRAINS CONNECTIONS TO DRAINAGE STRUCTURES SHALL BE INCLUDED IN THE COST OF THE PIPE UNDERDRAINS.

PROPOSED LON ITUDINAL PIPES

LINE 1
12" STORM SEWER, CLASS A, TYPE 2 - 15.67 FT.
TRENCH BACK FILL= 5.3 CUBIC YARDS

LINE 2
18" STORM SEWER. CLASS A, TYPE 2 - 98.00 FT
(CULVERT W/ 18" CONCRETE FLARED END SECTIONS)
TRENCH BACK FILL= 0.0 CUBIC YARDS

LINE 3
15" STORM SEWER, CLASS A, TYPE 4 - 161.24 FT
TRENCH BACK FILL= 53.7 CUBIC YARDS

LINE 4
18" STORM SEWER, CLASS A, TYPE 4 - 5.64 FT
(W/ 18" CONCRETE FLARED END SECTION)
TRENCH BACK FILL= 0.0 CUBIC YARDS

LINE 5
12" STORM SEWER, CLASS A, TYPE 2 - 16.76 FT
(W/ 12" CONCRETE FLARED END SECTION)
TRENCH BACK FILL= 0.0 CUBIC YARDS

LINE 6
12" STORM SEWER, CLASS A, TYPE 2 - 133.67 FT
TRENCH BACK FILL= 0.0 CUBIC YARDS

LINE 7
12" STORM SEWER, CLASS A, TYPE 4 - 160.89 FT
TRENCH BACK FILL= 0.0 CUBIC YARDS

LINE 8
12" STORM SEWER, CLASS A, TYPE 4 - 155.17 FT
TRENCH BACK FILL= 0.0 CUBIC YARDS

LINE 9
15" STORM SEWER, CLASS A, TYPE 2 - 285.58 FT
TRENCH BACK FILL= 0.0 CUBIC YARDS

LINE 10
18" STORM SEWER, CLASS A, TYPE 2 - 256.38 FT
TRENCH BACK FILL= 0.0 CUBIC YARDS

LINE 11
18" STORM SEWER, CLASS A, TYPE 2 - 191.73 FT
TRENCH BACK FILL= 0.0 CUBIC YARDS

LINE 12
18" STORM SEWER, CLASS A, TYPE 2 - 251.72 FT
TRENCH BACK FILL= 0.0 CUBIC YARDS

LINE 13
18" STORM SEWER, CLASS A, TYPE 2 - 213.77 FT
TRENCH BACK FILL= 0.0 CUBIC YARDS

LINE 14
24" STORM SEWER, CLASS A, TYPE 2 - 32.10 FT
TRENCH BACK FILL= 0.0 CUBIC YARDS

LINE 15
12" STORM SEWER, CLASS A, TYPE 2 - 110.88 FT
TRENCH BACK FILL= 25.8 CUBIC YARDS

LINE 15A
12" STORM SEWER, CLASS A, TYPE 2 - 4.08 FT
TRENCH BACK FILL= 1.0 CUBIC YARDS

LINE 16
12" PIPE CULVERT, CLASS A, TYPE 4 - 28.00 FT
(CULVERT BELOW DRIVEWAY W/ 15" CONCRETE FLARED END SECTIONS)
TRENCH BACK FILL= 0.0 CUBIC YARDS

LINE 17
24" STORM SEWER, CLASS A, TYPE 2 - 22.04 FT
(OUTFALL W/ 24" CONCRETE FLARED END SECTION)
TRENCH BACK FILL= 0.0 CUBIC YARDS

LINE 18
30" STORM SEWER, CLASS A, TYPE 2 - 10.42 FT
TRENCH BACK FILL= 0.0 CUBIC YARDS

LINE 18A
12" STORM SEWER, CLASS A, TYPE 1 - 1.90 FT
TRENCH BACK FILL= 0.47 CUBIC YARDS

LINE 19
36" STORM SEWER, CLASS A, TYPE 2 - 166.35 FT
TRENCH BACK FILL= 0.0 CUBIC YARDS

LINE 19A
12" STORM SEWER, CLASS A, TYPE 2 - 3.30 FT
TRENCH BACK FILL= 0.7 CUBIC YARDS

PROPOSED TRANS ERSE PIPES

LINE 20
18" STORM SEWER. CLASS A, TYPE 2 - 16.6 FT
(OUTFALL W/ 18" CONCRETE FLARED END SECTION)
TRENCH BACK FILL= 0.0 CUBIC YARDS

LINE 21
12" STORM SEWER, CLASS A, TYPE 2 - 37.5 FT
TRENCH BACK FILL= 9.0 CUBIC YARDS

LINE 21A
12" STORM SEWER, CLASS A, TYPE 2 - 3.71 FT
TRENCH BACK FILL= 1.4 CUBIC YARDS

LINE 22
12" STORM SEWER, CLASS A, TYPE 2 - 34.73 FT
TRENCH BACK FILL= 12.7 CUBIC YARDS

LINE 22A
12" STORM SEWER, CLASS A, TYPE 2 - 11.13 FT
TRENCH BACK FILL= 5.3 CUBIC YARDS

LINE 23
12" STORM SEWER, CLASS A, TYPE 2 - 29.56 FT
TRENCH BACK FILL= 15.5 CUBIC YARDS

LINE 24
12" STORM SEWER, CLASS A, TYPE 2 - 50.00 FT
TRENCH BACK FILL= 11.9 CUBIC YARDS

LINE 24A
12" STORM SEWER, CLASS A, TYPE 2 - 9.74 FT
TRENCH BACK FILL= 3.7 CUBIC YARDS

LINE 25
12" STORM SEWER, CLASS A, TYPE 2 - 28.16 FT
TRENCH BACK FILL= 12.3 CUBIC YARDS

LINE 26
12" STORM SEWER, CLASS A, TYPE 4 - 63.60 FT
TRENCH BACK FILL= 19.5 CUBIC YARDS

LINE 27
12" STORM SEWER, CLASS A, TYPE 2 - 28.36 FT
TRENCH BACK FILL= 11.9 CUBIC YARDS

LINE 28
18" STORM SEWER, CLASS A, TYPE 4 - 96.70 FT
TRENCH BACK FILL= 36.4 CUBIC YARDS

LINE 28A
12" STORM SEWER, CLASS A, TYPE 2 - 2.12 FT
TRENCH BACK FILL= 0.5 CUBIC YARDS

LINE 29
12" STORM SEWER, CLASS A, TYPE 2 - 28.85FT
TRENCH BACK FILL= 11.0 CUBIC YARDS

LINE 29A
12" STORM SEWER, CLASS A, TYPE 2 - 1.00 FT
TRENCH BACK FILL= 0.4 CUBIC YARDS

LINE 30
12" STORM SEWER, CLASS A, TYPE 2 - 33.03 FT
TRENCH BACK FILL= 10.1 CUBIC YARDS

LINE 31
12" STORM SEWER, CLASS A, TYPE 4 - 41.70 FT
TRENCH BACK FILL= 15.5 CUBIC YARDS

LINE 32
12" STORM SEWER, CLASS A, TYPE 4 - 44.66 FT
TRENCH BACK FILL= 13.5 CUBIC YARDS

LINE 32A
12" STORM SEWER, CLASS A, TYPE 2 - 1.37 FT
TRENCH BACK FILL= 0.4 CUBIC YARDS

LINE 33
STA 507+06
12" STORM SEWER, CLASS A, TYPE 2 - 46.16 FT
TRENCH BACK FILL= 10.6 CUBIC YARDS

LINE 33A
12" STORM SEWER, CLASS A, TYPE 2 - 2.03 FT
TRENCH BACK FILL= 0.5 CUBIC YARDS

LINE 34
12" STORM SEWER, CLASS A, TYPE 2 - 38.25 FT
TRENCH BACK FILL= 13.9 CUBIC YARDS

LINE 34A
12" STORM SEWER, CLASS A, TYPE 2 - 2.17 FT
TRENCH BACK FILL= 1.3 CUBIC YARDS

LINE 34B
12" STORM SEWER, CLASS A, TYPE 2 - 4.44 FT
TRENCH BACK FILL= 1.2 CUBIC YARDS

LINE 34C
12" STORM SEWER, CLASS A, TYPE 2 - 2.14 FT
TRENCH BACK FILL= 0.6 CUBIC YARDS

LINE 35
15" STORM SEWER CLASS A, TYPE 2 - 9.36 FT
(OUTFALL W/ 15" CONCRETE FLARED END SECTION)
TRENCH BACK FILL= 0.0 CUBIC YARDS

LINE 36
18" STORM SEWER, CLASS A, TYPE 2 - 12.40 FT
(OUTFALL W/ 18" CONCRETE FLARED END SECTIONS)
TRENCH BACK FILL= 0.0 CUBIC YARDS

ALL STATIONS/OFFSETS ARE FROM IL 59 AND
ARMY TRAIL RD. ~ UNLESS OTHERWISE NOTED

PIPE UNDERDRAINS TYPE 2 SHALL BE INSTALLED ACCORDING TO SECTION 601 OF THE SSRBC AND STANDARD 601001-05. TOP OF PIPE UNDERDRAINS SHALL BE PLACED MINIMUM 6" BELOW THE AGGREGATE SUBGRADE IMPROVEMENT LAYER. THE COST OF MAKING PIPE UNDERDRAINS CONNECTIONS TO DRAINAGE STRUCTURES SHALL BE INCLUDED IN THE COST OF THE PIPE UNDERDRAINS.

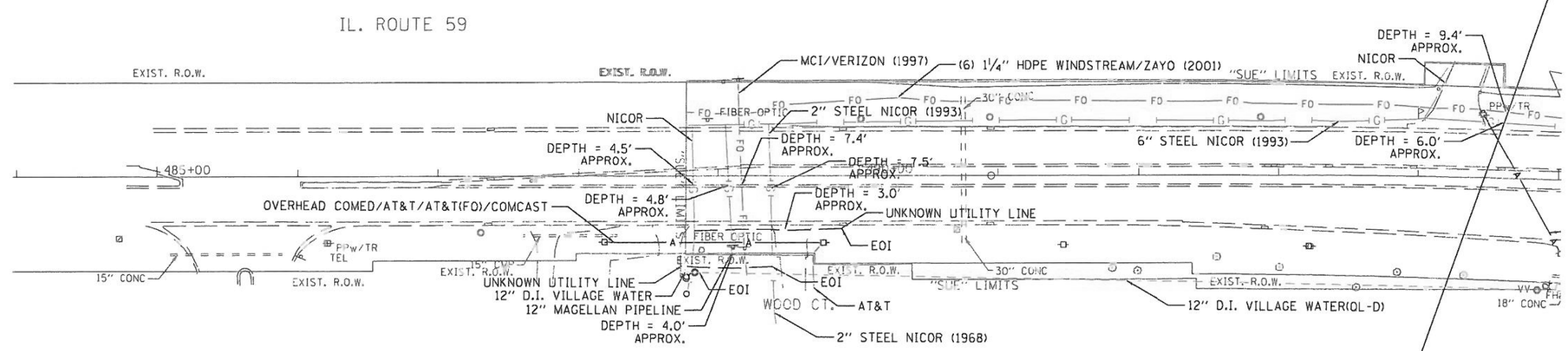

A	AERIAL
CTV	CABLE TV
E	ELECTRIC
FO	FIBER OPTIC
G	GAS
O	OIL
	SANITARY SEWER
T	TELEPHONE
	UNKNOWN
W	WATER
	(OL-_)
	SO-DEEP TEST HOLE

ILLINOIS REGISTERED PROFESSIONAL ENGINEER SCOTT ALLEN WECHTER E-024527 EXP. 12-31-2018

I, SCOTT ALLEN WECHTER, CERTIFY TO THE ILLINOIS DEPARTMENT OF TRANSPORTATION THAT TO THE BEST OF MY KNOWLEDGE, INFORMATION, AND BELIEF, THE UTILITY INFORMATION DEPICTED BY SO-DEEP, INC. ON THIS PLAN SHEET WAS OBTAINED AND COMPILED UNDER MY DIRECT SUPERVISION USING ACCEPTED PRACTICES AND PROCEDURES.

DATE: 10-24-17

SO-DEEP, INC.

N

SO-DEEP INC.

The Subsurface Utility Engineering Company
8397 Euclid Avenue
Manassas Park, VA 20111
703-361-6005

D162F17-SUE.DGN	Designated By: P.R.
	Drafted By: B.S.
Sheet: 1	Checked By: S.W.
Date: 10-24-2017	SIXG122

1

FILE NAME =	USER NAME = kalorm	DESIGNED -	REVISED -
pw:\\planroom.dot.illinois.gov:PW\IDOT\Documents\IDOT Offices\District 1\Projects\P105014\CADData\Design\P105014-sht-sue.dgn		DRAWN -	REVISED -
	PLOT SCALE = 100.0000 ' / in.	CHECKED -	REVISED -
Default	PLOT DATE = 3/22/2019	DATE -	REVISED -

STATE OF ILLINOIS
DEPARTMENT OF TRANSPORTATION

SUE INVESTIGATION AND UNDERGROUND UTILITIES
IL ROUTE 59 AT ARMY TRAIL ROAD

SCALE: | SHEET OF SHEETS | STA. | TO STA.

F.A.P. RTE.	SECTION	COUNTY	TOTAL SHEETS	SHEET NO.
338	110TS-N	DUPAGE	133	51

CONTRACT NO. 62F19

ILLINOIS | FED. AID PROJECT

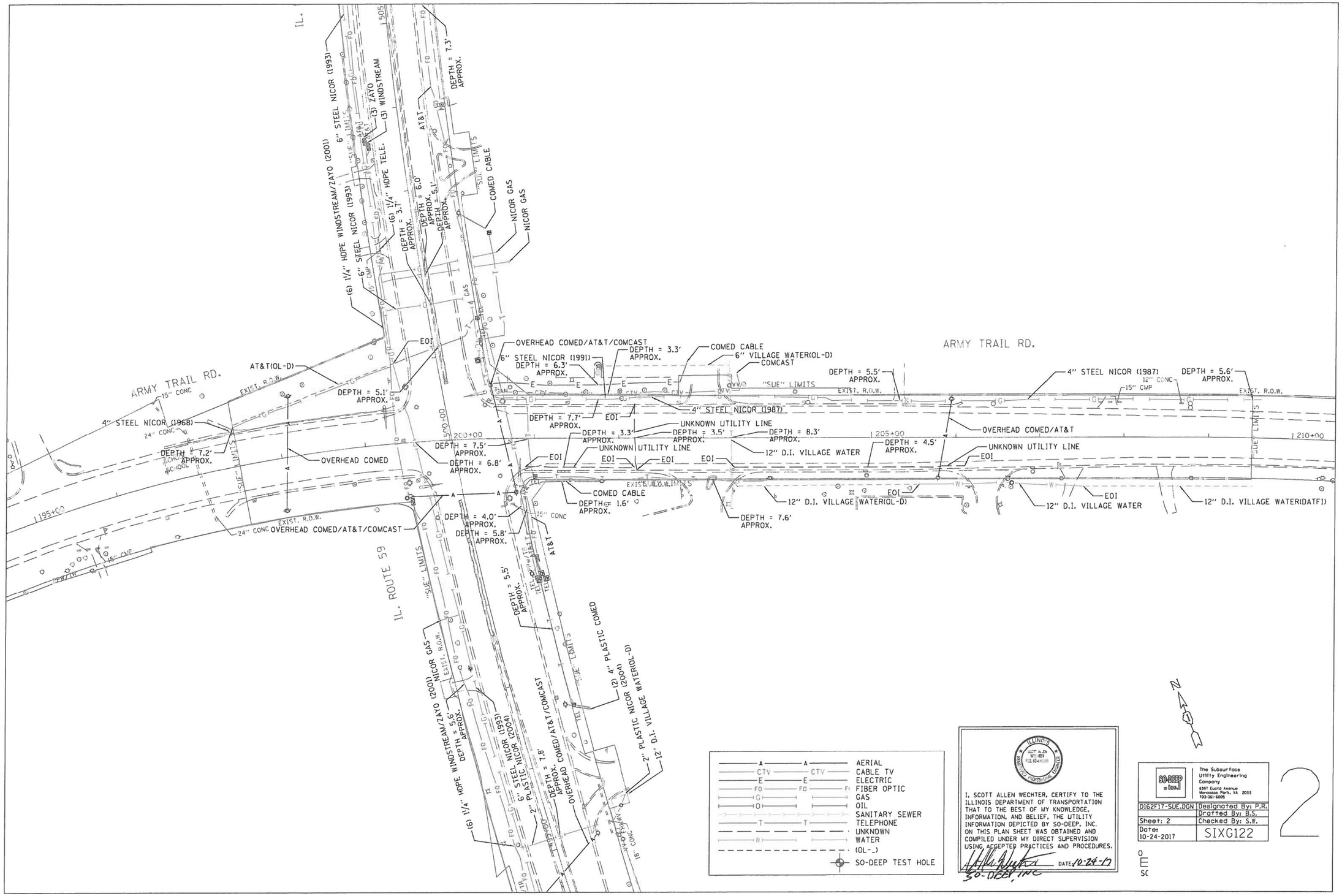

I, SCOTT ALLEN WECHTER, CERTIFY TO THE ILLINOIS DEPARTMENT OF TRANSPORTATION THAT TO THE BEST OF MY KNOWLEDGE, INFORMATION, AND BELIEF, THE UTILITY INFORMATION DEPICTED BY SO-DEEP, INC. ON THIS PLAN SHEET WAS OBTAINED AND COMPILED UNDER MY DIRECT SUPERVISION USING ACCEPTED PRACTICES AND PROCEDURES.

DATE 10-24-17

SO-DEEP, INC

The Subsurface Utility Engineering Company
8391 Euclid Avenue
Manassas Park, VA 20111
703-361-6005

DI62F17-SUE.DGN	Designated By: P.R.
	Drafted By: B.S.
Sheet: 2	Checked By: S.W.
Date: 10-24-2017	SIXG122

2

FILE NAME =	USER NAME = kalorm	DESIGNED -	REVISED -
pw:\\planroom.dot.illinois.gov:PW\IDOT\Documents\IDOT Offices\District 1\Projects\P105014\CADData\Design\P105014-sht-sue.dgn		DRAWN -	REVISED -
	PLOT SCALE = 100.0000 ' / in.	CHECKED -	REVISED -
Default	PLOT DATE = 3/22/2019	DATE -	REVISED -

STATE OF ILLINOIS
DEPARTMENT OF TRANSPORTATION

SUE INVESTIGATION AND UNDERGROUND UTILITIES
IL ROUTE 59 AT ARMY TRAIL ROAD

SCALE: SHEET OF SHEETS STA. TO STA.

F.A.P. RTE.	SECTION	COUNTY	TOTAL SHEETS	SHEET NO.
338	110TS-N	DUPAGE	133	52

CONTRACT NO. 62F19

ILLINOIS FED. AID PROJECT

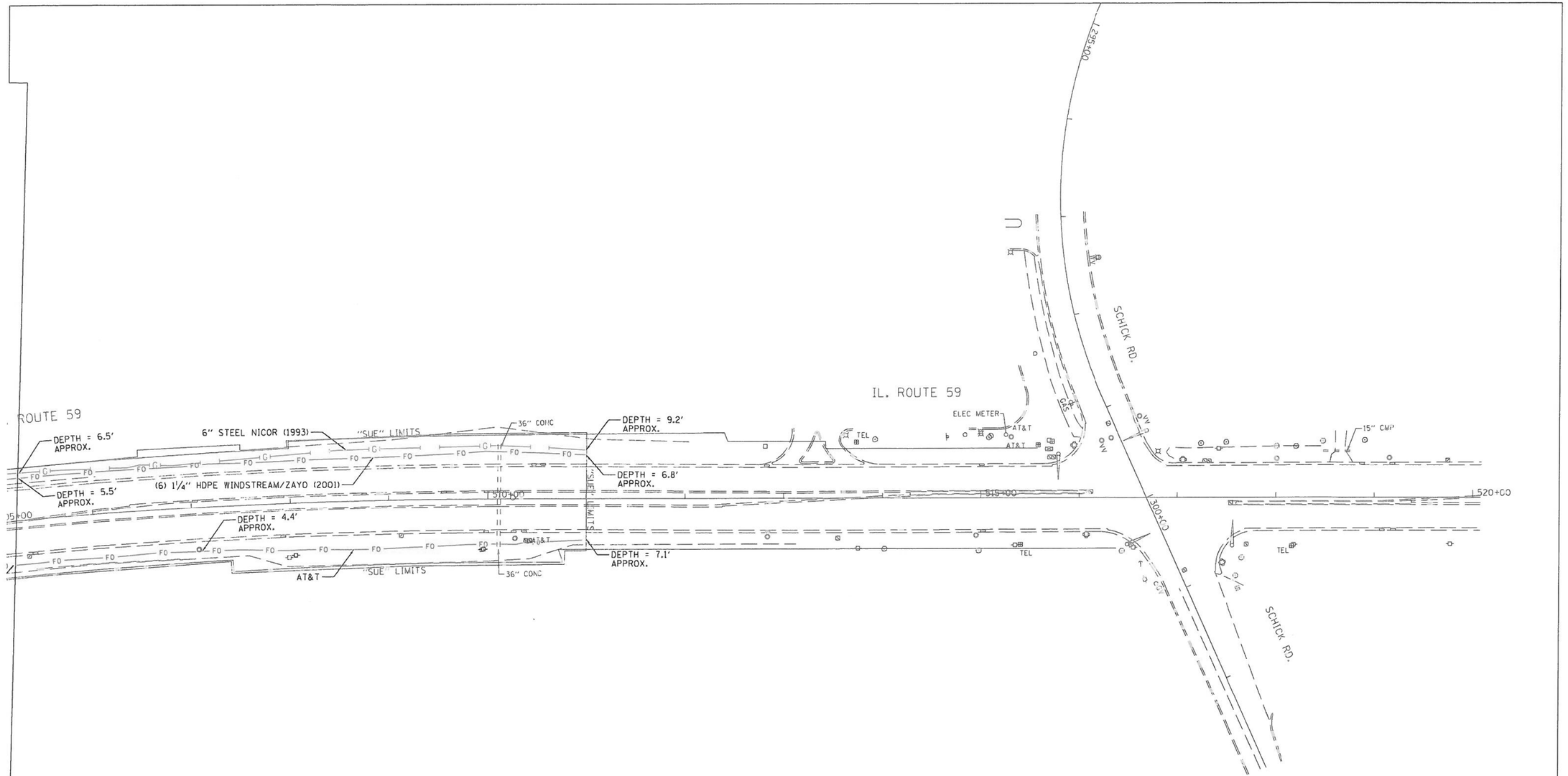

A	AERIAL
CTV	CABLE TV
E	ELECTRIC
FO	FIBER OPTIC
G	GAS
O	OIL
	SANITARY SEWER
T	TELEPHONE
	UNKNOWN
W	WATER
(OL-_)	
	SO-DEEP TEST HOLE

I, SCOTT ALLEN WECHTER, CERTIFY TO THE ILLINOIS DEPARTMENT OF TRANSPORTATION THAT TO THE BEST OF MY KNOWLEDGE, INFORMATION, AND BELIEF, THE UTILITY INFORMATION DEPICTED BY SO-DEEP, INC. ON THIS PLAN SHEET WAS OBTAINED AND COMPILED UNDER MY DIRECT SUPERVISION USING ACCEPTED PRACTICES AND PROCEDURES.

DATE: 10-24-17

SO-DEEP, INC

The Subsurface Utility Engineering Company
8397 Euclid Avenue
Manassas Park, VA 20111
703-361-6005

D162F17-SUE.DGN	Designated By: P.R.
	Drafted By: B.S.
Sheet: 3	Checked By: S.W.
Date: 10-24-2017	SIXG122

3

FILE NAME =	USER NAME = kalorm	DESIGNED -	REVISED -
pw:\\planroom.dot.illinois.gov:PWIDOT\Documents\IDOT Offices\District 1\Projects\P105014\CADData\Design\P105014-sht-SUE.dgn		DRAWN -	REVISED -
	PLOT SCALE = 100.0000 ' / in.	CHECKED -	REVISED -
Default	PLOT DATE = 3/22/2019	DATE -	REVISED -

STATE OF ILLINOIS
DEPARTMENT OF TRANSPORTATION

SUE INVESTIGATION AND UNDERGROUND UTILITIES
IL ROUTE 59 AT ARMY TRAIL ROAD

SCALE: | SHEET OF SHEETS | STA. TO STA.

F.A.P. RTE.	SECTION	COUNTY	TOTAL SHEETS	SHEET NO.
338	110TS-N	DUPAGE	133	53

CONTRACT NO. 62F19

ILLINOIS | FED. AID PROJECT

PART OF SECTION 16, TWP. 40 N., R. 9 E. OF THE 3RD. P.M., IN DUPAGE COUNTY, ILLINOIS.

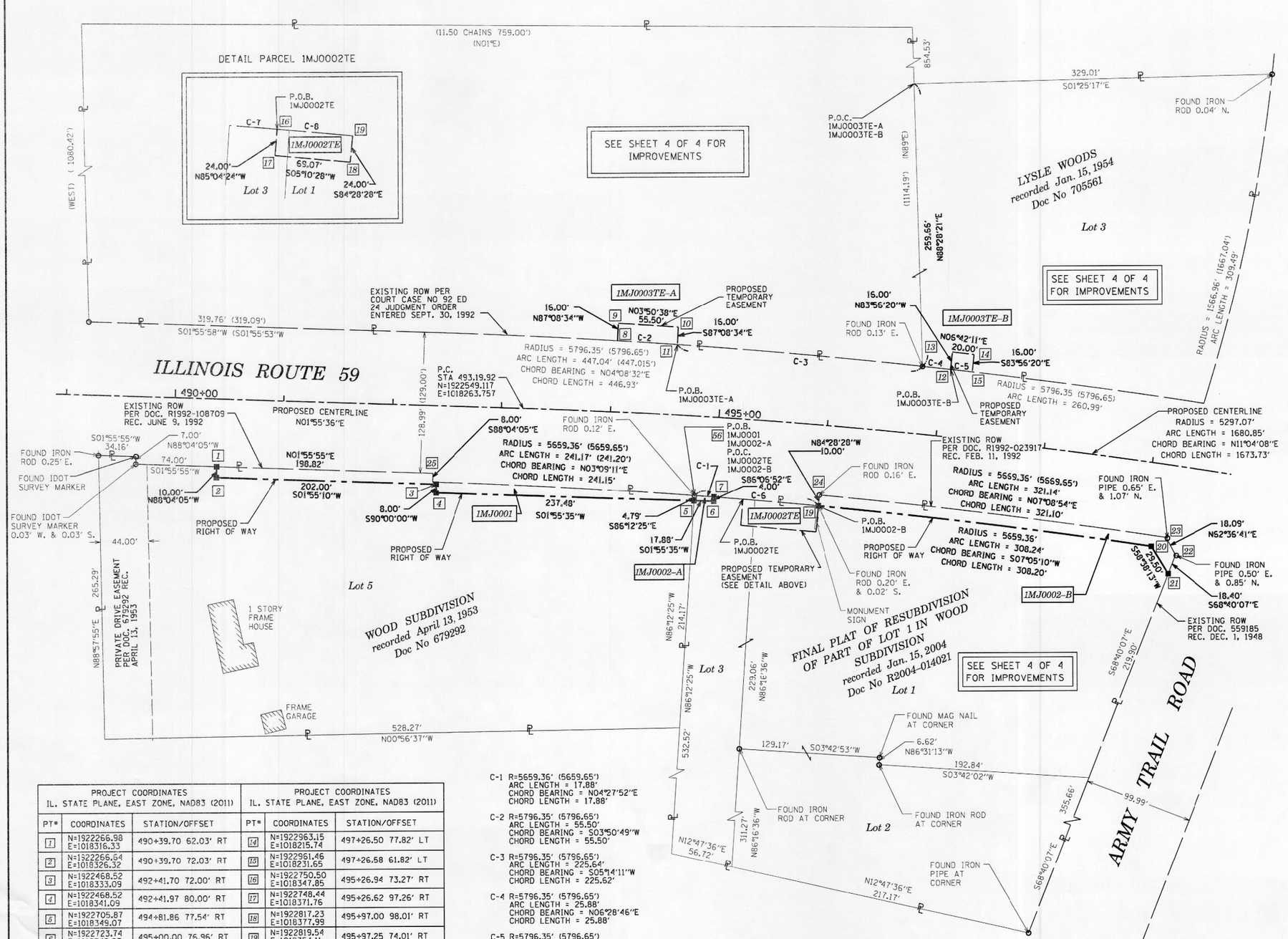

LEGEND

SECTION CORNER

QUARTER SECTION CORNER

GRAPHIC SCALE FEET

SCALE: 1"= 50'

- SECTION / QUARTER SECTION LINE
- PLATTED LOT LINES
- PROPERTY (DEED) LINE
- APPARENT PROPERTY LINE
- EXISTING CENTERLINE
- PROPOSED CENTERLINE
- EXISTING RIGHT OF WAY LINE
- PROPOSED RIGHT OF WAY LINE
- EXISTING EASEMENT
- PROPOSED EASEMENT
- EXISTING ACCESS CONTROL LINE
- PROPOSED ACCESS CONTROL LINE
- MEASURED / CALCULATED DIMENSION
- RECORDED DIMENSION
- EXISTING BUILDING

- IRON PIPE OR ROD FOUND
- CUT CROSS FOUND OR SET
- 'MAG' NAIL SET
- 5 / 8" REBAR SET
- STAKING OF PROPOSED RIGHT OF WAY. SET DIVISION OF HIGHWAYS SURVEY MARKER TO MONUMENT THE POSITION SHOWN. IDENTIFIED BY INSCRIPTION DATA AND SURVEYORS REGISTRATION NUMBER.
- M STAKING OF PROPOSED RIGHT OF WAY IN CULTIVATED AREAS. BURIED 5/8 INCH METAL ROD 20 INCHES BELOW GROUND TO MARK FUTURE SURVEY MARKER POSITION IDENTIFIED BY COLORED PLASTIC CAP BEARING SURVEYORS REGISTRATION NUMBER.
- PERMANENT SURVEY MARKER, I.D.O.T. STANDARD 2135 (TO BE SET BY OTHERS)
- RIGHT OF WAY STAKING PROPOSED TO BE SET

ALL DIMENSIONS ARE MEASURED UNLESS OTHERWISE SPECIFIED.
BEARINGS AND DISTANCES SHOWN HEREON REFERENCE THE ILLINOIS STATE PLANE COORDINATE SYSTEM, EAST ZONE, NORTH AMERICAN DATUM OF 1983 (2011 ADJUSTMENT) "GRID".
ALL MEASURED AND CALCULATED DISTANCES ARE "GRID" NOT "GROUND". TO OBTAIN GROUND DISTANCES, DIVIDE GRID DISTANCES SHOWN BY THE COMBINATION FACTOR OF 0.9999481489. AREAS SHOWN ON THIS PLAT ARE "GROUND".

STATE OF ILLINOIS)
)SS
COUNTY OF KANE)

THIS IS TO CERTIFY THAT WE, ENGINEERING ENTERPRISES INC. AN ILLINOIS PROFESSIONAL DESIGN FIRM LAND SURVEYING CORPORATION, NUMBER 184-002003, HAVE SURVEYED THE PLAT OF HIGHWAYS SHOWN HEREON IN SECTION 16, TOWNSHIP 40 NORTH, RANGE 9 EAST OF THE THIRD PRINCIPAL MERIDIAN, DUPAGE COUNTY, THAT THE SURVEY IS TRUE AND COMPLETE AS SHOWN TO THE BEST OF MY KNOWLEDGE AND BELIEF, THAT THE PLAT CORRECTLY REPRESENTS SAID SURVEY, THAT ALL MONUMENTS FOUND AND ESTABLISHED ARE OF PERMANENT QUALITY AND OCCUPY THE POSITIONS SHOWN THEREON AND THAT THE MONUMENTS ARE SUFFICIENT TO ENABLE THE SURVEY TO BE RETRACED, MADE FOR THE DEPARTMENT OF TRANSPORTATION, STATE OF ILLINOIS.

DATED AT _____, ILLINOIS THIS ___ DAY OF _____ 20 __ A.D.

ILLINOIS PROFESSIONAL LAND SURVEYOR NO. 3581
LICENSE EXPIRATION DATE: 11/30/2018

THIS PROFESSIONAL SERVICE CONFORMS TO THE CURRENT ILLINOIS MINIMUM STANDARDS FOR A BOUNDARY SURVEY.

MARK G. SCHELLER 035-003581 PROFESSIONAL LAND SURVEYOR STATE OF ILLINOIS SUGAR GROVE, IL

Engineering Enterprises, Inc.
CONSULTING ENGINEERS & LAND SURVEYORS
52 Wheeler Road
Sugar Grove, Illinois 60554 Phone: (630) 466-6700
Prof. Design Firm 184-002003 exp. 4-30-2017

PROJECT COORDINATES IL. STATE PLANE, EAST ZONE, NAD83 (2011)			PROJECT COORDINATES IL. STATE PLANE, EAST ZONE, NAD83 (2011)		
PT#	COORDINATES	STATION/OFFSET	PT#	COORDINATES	STATION/OFFSET
1	N=1922266.98 E=1018316.33	490+39.70 62.03' RT	14	N=1922963.15 E=1018215.74	497+26.50 77.82' LT
2	N=1922266.64 E=1018326.32	490+39.70 72.03' RT	15	N=1922961.46 E=1018231.65	497+26.58 61.82' LT
3	N=1922468.52 E=1018333.09	492+41.70 72.00' RT	16	N=1922750.50 E=1018347.85	495+26.94 73.27' RT
4	N=1922468.52 E=1018341.09	492+41.97 80.00' RT	17	N=1922748.44 E=1018371.76	495+26.62 97.26' RT
5	N=1922705.87 E=1018349.07	494+81.86 77.54' RT	18	N=1922817.23 E=1018377.99	495+97.00 98.01' RT
6	N=1922723.74 E=1018349.67	495+00.00 76.96' RT	19	N=1922819.54 E=1018354.11	495+97.25 74.01' RT
7	N=1922724.02 E=1018345.68	495+00.00 72.96' RT	20	N=1923125.38 E=1018392.12	499+09.95 76.39' RT
8	N=1922635.83 E=1018202.08	494+03.48 65.23' LT	21	N=1923140.74 E=1018417.31	499+29.15 99.05' RT
9	N=1922636.63 E=1018186.10	494+03.48 81.23' LT	22	N=1923147.43 E=1018400.17	499+33.29 81.10' RT
10	N=1922692.00 E=1018189.82	494+58.14 80.54' LT	23	N=1923139.11 E=1018384.11	499+22.52 66.45' RT
11	N=1922691.20 E=1018205.81	494+58.30 64.53' LT	24	N=1922820.50 E=1018344.15	495+97.35 64.01' RT
12	N=1922941.60 E=1018229.32	497+06.82 61.98' LT	25	N=1922465.68 E=1018323.03	492+38.52 62.04' RT
13	N=1922943.29 E=1018213.41	497+06.80 77.99' LT	56	N=1922706.19 E=1018344.29	494+81.87 72.75' RT

C-1 R=5659.36' (5659.65')
ARC LENGTH = 17.88'
CHORD BEARING = N04°27'52"E
CHORD LENGTH = 17.88'

C-2 R=5796.35' (5796.65')
ARC LENGTH = 55.50'
CHORD BEARING = S03°50'49"W
CHORD LENGTH = 55.50'

C-3 R=5796.35' (5796.65')
ARC LENGTH = 225.64'
CHORD BEARING = S05°14'11"W
CHORD LENGTH = 225.62'

C-4 R=5796.35' (5796.65')
ARC LENGTH = 25.88'
CHORD BEARING = N06°28'46"E
CHORD LENGTH = 25.88'

C-5 R=5796.35' (5796.65')
ARC LENGTH = 20.00'
CHORD BEARING = S06°42'22"W
CHORD LENGTH = 20.00'

C-6 R=5659.36' (5659.65')
ARC LENGTH = 113.78'
CHORD BEARING = N04°56'59"E
CHORD LENGTH = 113.77'

C-7 R=5659.36 (5659.65')
ARC LENGTH = 44.45'
CHORD BEARING = N04°35'56"E
CHORD LENGTH = 44.45'

C-8 R=5659.36' (5659.65')
ARC LENGTH = 69.33'
CHORD BEARING = N05°10'29"E
CHORD LENGTH = 69.32'

PARCEL NUMBER	TOTAL HOLDINGS ACRES	PART TAKEN ACRES	AREA IN EXISTING R.O.W. ACRES	REMAINDER AREA ACRES	EASEMENT AREA ACRES	EASEMENT AREA SQUARE FEET	PARCEL INDEX NUMBER
1MJ0001	2.922	0.090		2.832			01-16-403-009
1MJ0002-A 1MJ0002-B 1MJ0002TE	5.801	A=0.002 (79 SF) B=0.081		5.718	0.038		01-16-403-010 01-16-403-011 01-16-403-012
1MJ0003TE-A 1MJ0003TE-B	21.068			21.068	A=0.020 B=0.007	B=320	01-16-402-013 01-16-402-016 01-16-402-017 01-16-402-020

REVISION MADE BY: MGS REVISION DATE: / /

IDOT USE ONLY

RECEIVED
APR 11 2017
PLATS & LEGALS

PLAT OF HIGHWAYS

STATE OF ILLINOIS
DEPARTMENT OF TRANSPORTATION
ROUTE 59

LIMITS: ARMY TRAIL ROAD — COUNTY: DUPAGE
SECTION: — JOB NO.: R-91-010-17
STA. 490+39.70 TO STA. 499+33.29
SCALE: 1" = 50' — SHEET 54 OF 133 SHEETS

BUREAU OF LAND ACQUISITION
201 WEST CENTER COURT
SCHAUMBURG, ILLINOIS 60196

PART OF SECTION 16, TWP. 40 N., R. 9 E. OF THE 3RD. P.M., IN DUPAGE COUNTY, ILLINOIS.

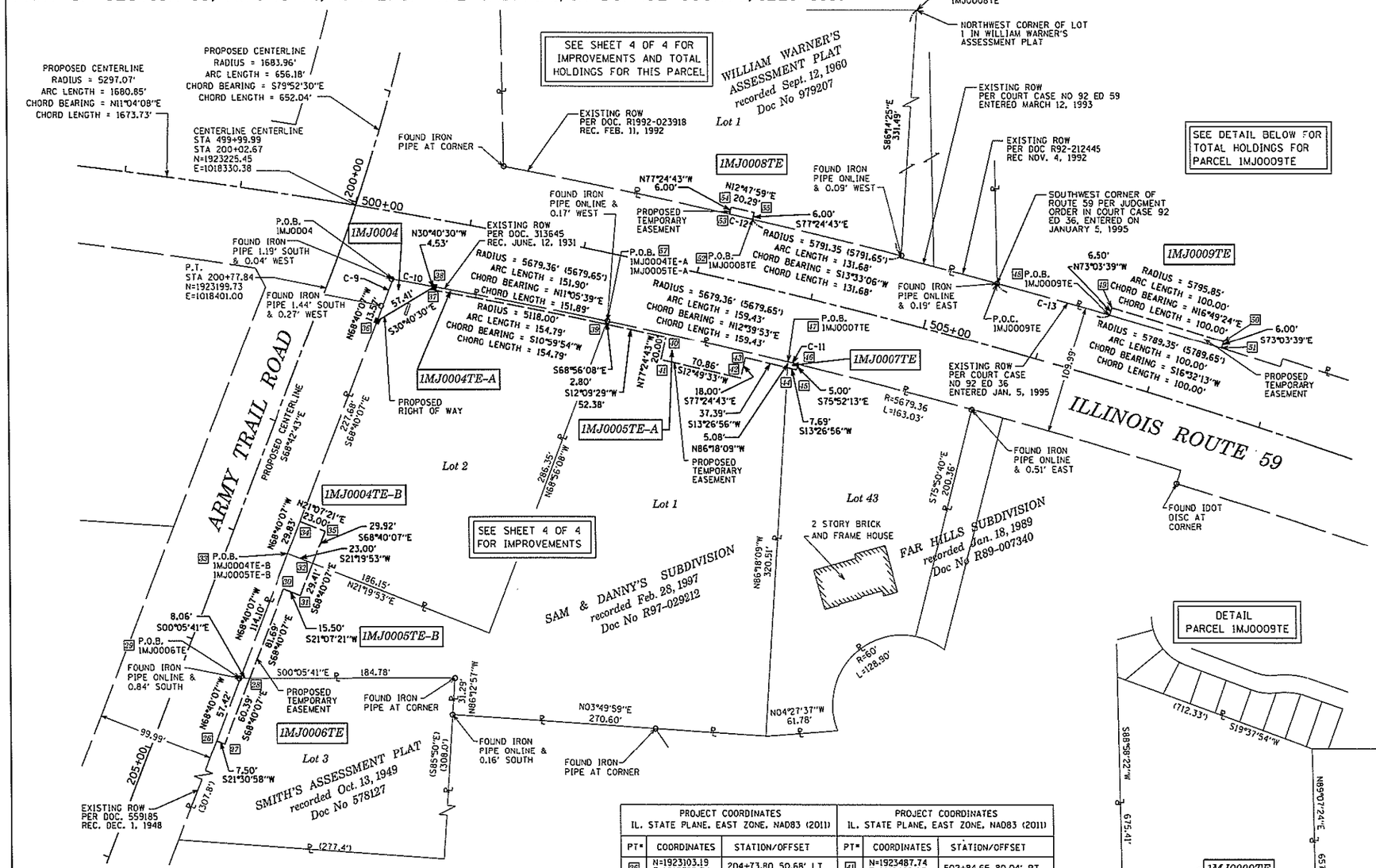

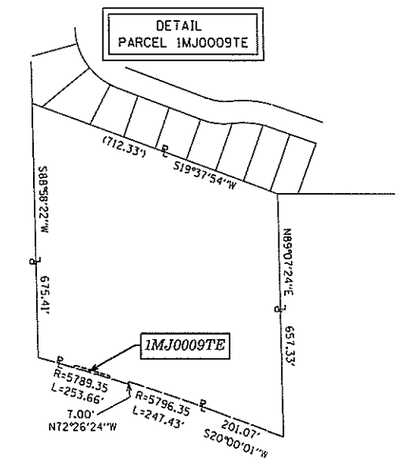

LEGEND

SECTION CORNER — QUARTER SECTION CORNER — GRAPHIC SCALE FEET — SCALE: 1"= 50'

- SECTION / QUARTER SECTION LINE
- PLATTED LOT LINES
- PROPERTY (DEED) LINE
- APPARENT PROPERTY LINE
- EXISTING CENTERLINE
- PROPOSED CENTERLINE
- EXISTING RIGHT OF WAY LINE
- PROPOSED RIGHT OF WAY LINE
- EXISTING EASEMENT
- PROPOSED EASEMENT
- EXISTING ACCESS CONTROL LINE
- PROPOSED ACCESS CONTROL LINE
- 129.32' (129.32') MEASURED / CALCULATED DIMENSION
- RECORDED DIMENSION
- EXISTING BUILDING

- ○ IRON PIPE OR ROD FOUND
- + CUT CROSS FOUND OR SET
- ⊕ "MAG" NAIL SET
- ● 5/8" REBAR SET
- ■ STAKING OF PROPOSED RIGHT OF WAY. SET DIVISION OF HIGHWAYS SURVEY MARKER TO MONUMENT THE POSITION SHOWN. IDENTIFIED BY INSCRIPTION DATA AND SURVEYORS REGISTRATION NUMBER.
- ■ M STAKING OF PROPOSED RIGHT OF WAY IN CULTIVATED AREAS. BURIED 5/8 INCH METAL ROD 20 INCHES BELOW GROUND TO MARK FUTURE SURVEY MARKER POSITION IDENTIFIED BY COLORED PLASTIC CAP BEARING SURVEYORS REGISTRATION NUMBER.
- PERMANENT SURVEY MARKER. I.D.O.T. STANDARD 2135 (TO BE SET BY OTHERS)
- □ RIGHT OF WAY STAKING PROPOSED TO BE SET

ALL DIMENSIONS ARE MEASURED UNLESS OTHERWISE SPECIFIED.
BEARINGS AND DISTANCES SHOWN HEREON REFERENCE THE ILLINOIS STATE PLANE COORDINATE SYSTEM, EAST ZONE, NORTH AMERICAN DATUM OF 1983 (2011 ADJUSTMENT) "GRID".
ALL MEASURED AND CALCULATED DISTANCES ARE "GRID" NOT "GROUND". TO OBTAIN GROUND DISTANCES, DIVIDE GRID DISTANCES SHOWN BY THE COMBINATION FACTOR OF 0.999948489. AREAS SHOWN ON THIS PLAT ARE "GROUND".

STATE OF ILLINOIS)
)SS
COUNTY OF KANE)

THIS IS TO CERTIFY THAT WE, ENGINEERING ENTERPRISES INC. AN ILLINOIS PROFESSIONAL DESIGN FIRM LAND SURVEYING CORPORATION, NUMBER 184-002003, HAVE SURVEYED THE PLAT OF HIGHWAYS SHOWN HEREON IN SECTION 16, TOWNSHIP 40 NORTH, RANGE 9 EAST OF THE THIRD PRINCIPAL MERIDIAN, DUPAGE COUNTY. THAT THE SURVEY IS TRUE AND COMPLETE AS SHOWN TO THE BEST OF MY KNOWLEDGE AND BELIEF. THAT THE PLAT CORRECTLY REPRESENTS SAID SURVEY. THAT ALL MONUMENTS FOUND AND ESTABLISHED ARE OF PERMANENT QUALITY AND OCCUPY THE POSITIONS SHOWN THEREON AND THAT THE MONUMENTS ARE SUFFICIENT TO ENABLE THE SURVEY TO BE RETRACED. MADE FOR THE DEPARTMENT OF TRANSPORTATION, STATE OF ILLINOIS.

DATED AT _____, ILLINOIS THIS ___ DAY OF _____ 20 ___ A.D.

ILLINOIS PROFESSIONAL LAND SURVEYOR NO. 3581
LICENSE EXPIRATION DATE: 11/30/2018

THIS PROFESSIONAL SERVICE CONFORMS TO THE CURRENT ILLINOIS MINIMUM STANDARDS FOR A BOUNDARY SURVEY.

MARK G. SCHELLER 035-003581 PROFESSIONAL LAND SURVEYOR STATE OF ILLINOIS SUGAR GROVE, IL

Engineering Enterprises, Inc.
CONSULTING ENGINEERS & LAND SURVEYORS
52 Wheeler Road
Sugar Grove, Illinois 60554 Phone: (630) 466-6700
Prof. Design Firm 184-002003 exp. 4-30-2017

PARCEL NUMBER	TOTAL HOLDINGS ACRES	PART TAKEN ACRES	AREA IN EXISTING R.O.W. ACRES	REMAINDER AREA ACRES	EASEMENT AREA ACRES	EASEMENT AREA SQUARE FEET	PARCEL INDEX NUMBER
1MJ0004 1MJ0004TE-A 1MJ0004TE-B	1.150	0.016		1.134	A=0.010 B=0.016	A=435	01-16-401-014
1MJ0005TE-A 1MJ0005TE-B	1.970			1.970	A=0.045 B=0.030		01-16-401-013
1MJ0006TE	1.592			1.592	0.010	442	01-16-401-003
1MJ0007TE	0.831			0.831	0.001	41	01-16-404-013
1MJ0008TE	12.723			12.723	0.003	122	01-16-400-008 01-16-400-010
1MJ0009TE	10.017			10.017	0.014		01-16-400-013

PT*	PROJECT COORDINATES IL. STATE PLANE, EAST ZONE, NAD83 (2011) COORDINATES	STATION/OFFSET
26	N=1923103.19 E=1018738.34	204+73.80 50.68' LT
27	N=1923110.17 E=1018791.09	204+73.83 58.18' LT
28	N=1923132.14 E=1018734.84	204+13.44 58.22' LT
29	N=1923124.08 E=1018734.85	204+16.38 50.72' LT
30	N=1923161.85 E=1018658.74	203+31.75 58.28' LT
31	N=1923176.31 E=1018664.33	203+31.70 73.78' LT
32	N=1923187.01 E=1018636.93	203+02.29 73.81' LT
33	N=1923165.59 E=1018628.56	203+02.27 50.81' LT
34	N=1923176.44 E=1018600.77	202+72.44 50.83' LT
35	N=1923187.89 E=1018609.06	202+72.37 73.83' LT
36	N=1923243.47 E=1018429.12	500+34.40 94.41' RT
37	N=1923288.95 E=1018402.15	500+75.15 60.00' RT
38	N=1923292.85 E=1018399.83	500+78.62 57.04' RT
39	N=1923440.90 E=1018431.68	502+31.72 60.01' RT
40	N=1923492.10 E=1018442.71	502+84.71 60.04' RT

PT*	PROJECT COORDINATES IL. STATE PLANE, EAST ZONE, NAD83 (2011) COORDINATES	STATION/OFFSET
41	N=1923487.74 E=1018462.23	502+84.65 80.04' RT
42	N=1923556.84 E=1018477.96	503+56.60 80.05' RT
43	N=1923560.76 E=1018460.39	503+56.41 62.05' RT
44	N=1923597.13 E=1018469.09	503+94.25 62.08' RT
45	N=1923604.61 E=1018470.87	504+02.03 62.05' RT
46	N=1923605.83 E=1018466.03	504+02.07 57.05' RT
47	N=1923597.46 E=1018464.01	503+93.36 57.07' RT
48	N=1923874.49 E=1018423.26	506+50.51 54.03' LT
49	N=1923876.39 E=1018417.05	506+50.57 60.53' LT
50	N=1923972.11 E=1018445.99	507+49.43 60.74' LT
51	N=1923970.36 E=1018451.73	507+49.49 54.74' LT
52	N=1923567.59 E=1018341.99	503+36.23 54.81' LT
53	N=1923547.81 E=1018337.50	503+16.15 54.79' LT
54	N=1923549.12 E=1018331.64	503+16.13 60.79' LT
55	N=1923568.90 E=1018336.14	503+36.19 60.81' LT
57	N=1923441.91 E=1018429.06	502+32.18 57.25' RT

REVISION MADE BY: MGS REVISION DATE: 07/31/2018

C-9 RADIUS = 1687.19' (1687.28')
ARC LENGTH = 24.65' (24.50')
CHORD BEARING = N69°06'00"W
CHORD LENGTH = 24.65'

C-10 RADIUS = 5679.36' (5979.65')
ARC LENGTH = 36.21'
CHORD BEARING = N10°08'43"E
CHORD LENGTH = 36.21'

C-11 RADIUS = 5679.36' (5979.65')
ARC LENGTH = 8.61'
CHORD BEARING = N13°30'44"E
CHORD LENGTH = 8.61'

C-12 RADIUS = 5791.35 (5791.65')
ARC LENGTH = 20.29'
CHORD BEARING = S12°48'00"W
CHORD LENGTH = 20.29'

C-13 RADIUS = 5789.35' (5789.65')
ARC LENGTH = 100.60'
CHORD BEARING = N15°32'40"E
CHORD LENGTH = 100.59'

PLAT OF HIGHWAYS

STATE OF ILLINOIS
DEPARTMENT OF TRANSPORTATION
ROUTE 59

LIMITS: ARMY TRAIL ROAD — COUNTY: DUPAGE
SECTION: — JOB NO.: R-91-010-17
STA. 499+48.99 TO STA. 507+49.49
STA. 202+72.37 TO STA. 204+73.83
SCALE: 1" = 50' — SHEET 55 OF 133 SHEETS

BUREAU OF LAND ACQUISITION
201 WEST CENTER COURT
SCHAUMBURG, ILLINOIS 60196

PART OF SECTION 16, TWP. 40 N., R. 9 E. OF THE 3RD. P.M., IN DUPAGE COUNTY, ILLINOIS.

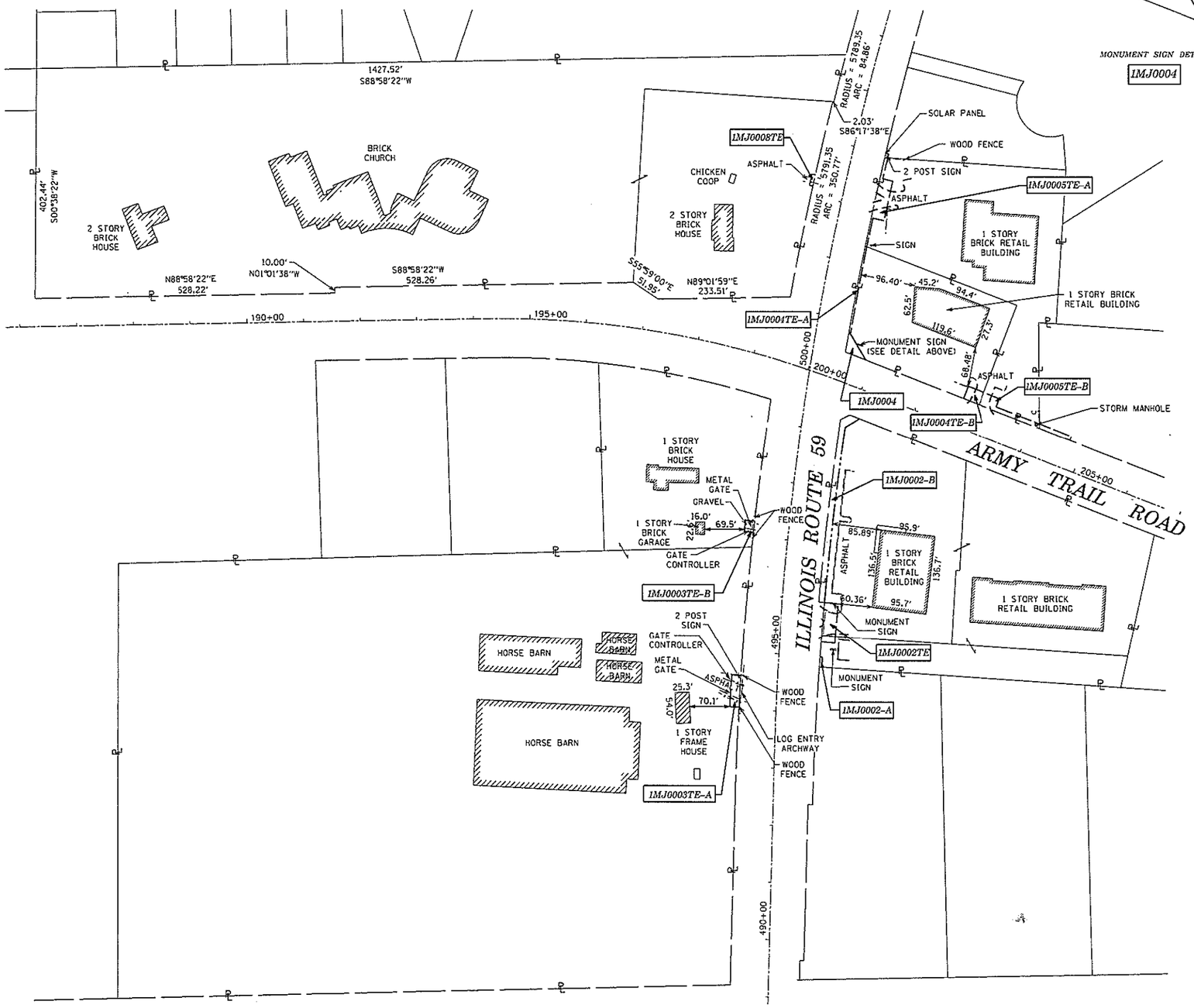

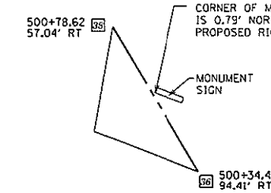

LEGEND

SECTION CORNER

QUARTER SECTION CORNER

N

GRAPHIC SCALE FEET

SCALE: 1"= 100'

- SECTION / QUARTER SECTION LINE
- PLATTED LOT LINES
- PROPERTY (DEED) LINE
- APPARENT PROPERTY LINE
- EXISTING CENTERLINE
- PROPOSED CENTERLINE
- EXISTING RIGHT OF WAY LINE
- PROPOSED RIGHT OF WAY LINE
- EXISTING EASEMENT
- PROPOSED EASEMENT
- EXISTING ACCESS CONTROL LINE
- PROPOSED ACCESS CONTROL LINE
- 129.32' (129.32') MEASURED / CALCULATED DIMENSION RECORDED DIMENSION
- EXISTING BUILDING

- ○ IRON PIPE OR ROD FOUND
- + CUT CROSS FOUND OR SET
- ■ STAKING OF PROPOSED RIGHT OF WAY. SET DIVISION OF HIGHWAYS SURVEY MARKER TO MONUMENT THE POSITION SHOWN. IDENTIFIED BY INSCRIPTION DATA AND SURVEYORS REGISTRATION NUMBER.
- ■ M STAKING OF PROPOSED RIGHT OF WAY IN CULTIVATED AREAS. BURIED 5/8 INCH METAL ROD 20 INCHES BELOW GROUND TO MARK FUTURE SURVEY MARKER POSITION IDENTIFIED BY COLORED PLASTIC CAP BEARING SURVEYORS REGISTRATION NUMBER.
- ⊕ PERMANENT SURVEY MARKER. I.D.O.T. STANDARD 2135 (TO BE SET BY OTHERS)
- □ RIGHT OF WAY STAKING PROPOSED TO BE SET
- ⊕ "MAG" NAIL SET
- ● 5/8" REBAR SET

ALL DIMENSIONS ARE MEASURED UNLESS OTHERWISE SPECIFIED.
BEARINGS AND DISTANCES SHOWN HEREON REFERENCE THE ILLINOIS STATE PLANE COORDINATE SYSTEM, EAST ZONE, NORTH AMERICAN DATUM OF 1983 (2011 ADJUSTMENT) "GRID".
ALL MEASURED AND CALCULATED DISTANCES ARE "GRID" NOT "GROUND". TO OBTAIN GROUND DISTANCES, DIVIDE GRID DISTANCES SHOWN BY THE COMBINATION FACTOR OF 0.9999481489. AREAS SHOWN ON THIS PLAT ARE "GROUND".

STATE OF ILLINOIS)
)SS
COUNTY OF KANE)

THIS IS TO CERTIFY THAT WE, ENGINEERING ENTERPRISES INC. AN ILLINOIS PROFESSIONAL DESIGN FIRM LAND SURVEYING CORPORATION, NUMBER 184-002003, HAVE SURVEYED THE PLAT OF HIGHWAYS SHOWN HEREON IN SECTION 16, TOWNSHIP 40 NORTH, RANGE 9 EAST OF THE THIRD PRINCIPAL MERIDIAN, DUPAGE COUNTY, THAT THE SURVEY IS TRUE AND COMPLETE AS SHOWN TO THE BEST OF MY KNOWLEDGE AND BELIEF, THAT THE PLAT CORRECTLY REPRESENTS SAID SURVEY, THAT ALL MONUMENTS FOUND AND ESTABLISHED ARE OF PERMANENT QUALITY AND OCCUPY THE POSITIONS SHOWN THEREON AND THAT THE MONUMENTS ARE SUFFICIENT TO ENABLE THE SURVEY TO BE RETRACED, MADE FOR THE DEPARTMENT OF TRANSPORTATION, STATE OF ILLINOIS.

DATED AT _____, ILLINOIS THIS __ DAY OF _____ 20__ A.D.

ILLINOIS PROFESSIONAL LAND SURVEYOR NO. 3581
LICENSE EXPIRATION DATE: 11/30/2018

THIS PROFESSIONAL SERVICE CONFORMS TO THE CURRENT ILLINOIS MINIMUM STANDARDS FOR A BOUNDARY SURVEY.

MARK G. SCHELER 035-003581 PROFESSIONAL LAND SURVEYOR STATE OF ILLINOIS SUGAR GROVE, IL

Engineering Enterprises, Inc.
CONSULTING ENGINEERS & LAND SURVEYORS
52 Wheeler Road
Sugar Grove, Illinois 60554 Phone: (630) 466-6700
Prof. Design Firm 184-002003 exp. 4-30-2017

PLAT OF HIGHWAYS

STATE OF ILLINOIS
DEPARTMENT OF TRANSPORTATION
ROUTE 59

LIMITS: ARMY TRAIL ROAD — COUNTY: DUPAGE
SECTION: — JOB NO.: R-91-010-17
STA. TO STA.
SCALE: 1" = 100' — SHEET 56 OF 133 SHEETS

BUREAU OF LAND ACQUISITION
201 WEST CENTER COURT
SCHAUMBURG, ILLINOIS 60196

REVISION MADE BY: MGS REVISION DATE: 07/31/2018

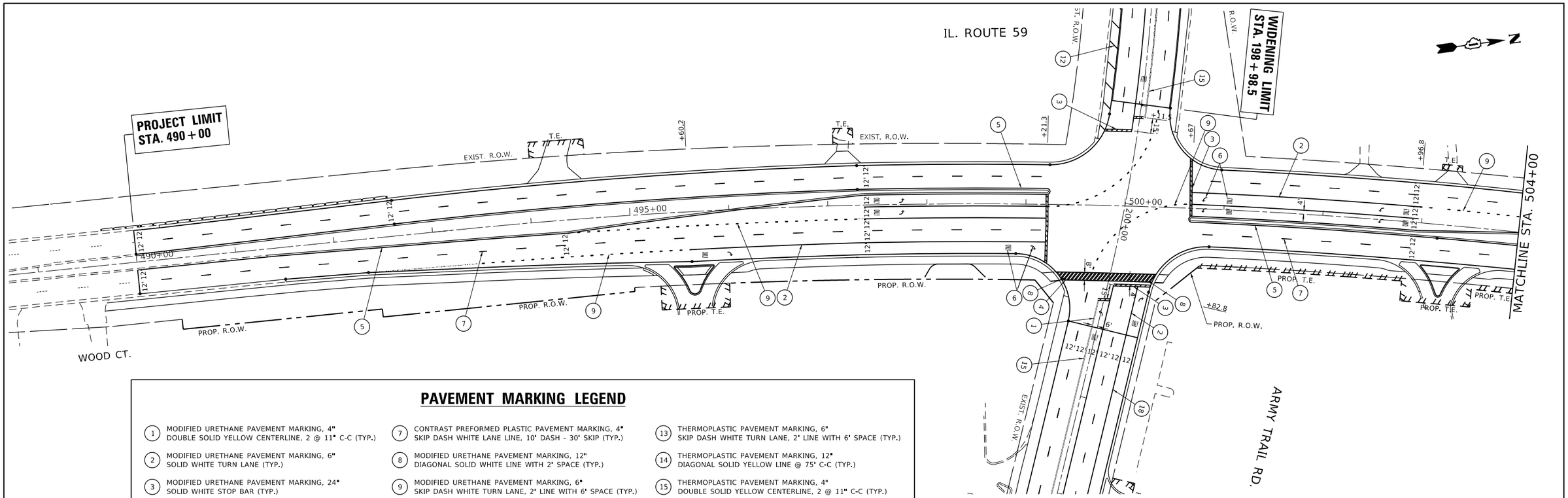

PAVEMENT MARKING LEGEND

1. MODIFIED URETHANE PAVEMENT MARKING, 4" DOUBLE SOLID YELLOW CENTERLINE, 2 @ 11" C-C (TYP.)
2. MODIFIED URETHANE PAVEMENT MARKING, 6" SOLID WHITE TURN LANE (TYP.)
3. MODIFIED URETHANE PAVEMENT MARKING, 24" SOLID WHITE STOP BAR (TYP.)
4. MODIFIED URETHANE PAVEMENT MARKING, 6" SOLID WHITE CROSSWALK LINE, 2 @ 6' C-C
5. MODIFIED URETHANE PAVEMENT MARKING, 4" SINGLE SOLID YELLOW LINE (TYP.)
6. MODIFIED URETHANE PAVEMENT MARKING, LETTERS AND SYMBOLS, SOLID WHITE (TYP.)
7. CONTRAST PREFORMED PLASTIC PAVEMENT MARKING, 4" SKIP DASH WHITE LANE LINE, 10' DASH - 30' SKIP (TYP.)
8. MODIFIED URETHANE PAVEMENT MARKING, 12" DIAGONAL SOLID WHITE LINE WITH 2' SPACE (TYP.)
9. MODIFIED URETHANE PAVEMENT MARKING, 6" SKIP DASH WHITE TURN LANE, 2' LINE WITH 6' SPACE (TYP.)
10. MODIFIED URETHANE PAVEMENT MARKING, 12" DIAGONAL SOLID YELLOW LINE @ 75' C-C (TYP.)
11. MODIFIED URETHANE PAVEMENT MARKING, 4" SINGLE SOLID WHITE LINE (TYP.)
12. MODIFIED URETHANE PAVEMENT MARKING, 12" DIAGONAL SOLID WHITE LINE @ 75' C-C (TYP.)
13. THERMOPLASTIC PAVEMENT MARKING, 6" SKIP DASH WHITE TURN LANE, 2' LINE WITH 6' SPACE (TYP.)
14. THERMOPLASTIC PAVEMENT MARKING, 12" DIAGONAL SOLID YELLOW LINE @ 75' C-C (TYP.)
15. THERMOPLASTIC PAVEMENT MARKING, 4" DOUBLE SOLID YELLOW CENTERLINE, 2 @ 11" C-C (TYP.)
16. THERMOPLASTIC PAVEMENT MARKING, 4" SINGLE SOLID WHITE LINE (TYP.)
17. THERMOPLASTIC PAVEMENT MARKING, 4" SKIP DASH WHITE LANE LINE, 10' DASH - 30' SKIP (TYP.)
18. THERMOPLASTIC PAVEMENT MARKING, 6" SOLID WHITE TURN LANE (TYP.)
19. THERMOPLASTIC PAVEMENT MARKING, LETERS AND SYMBOLS, SOLID WHITE (TYP.)

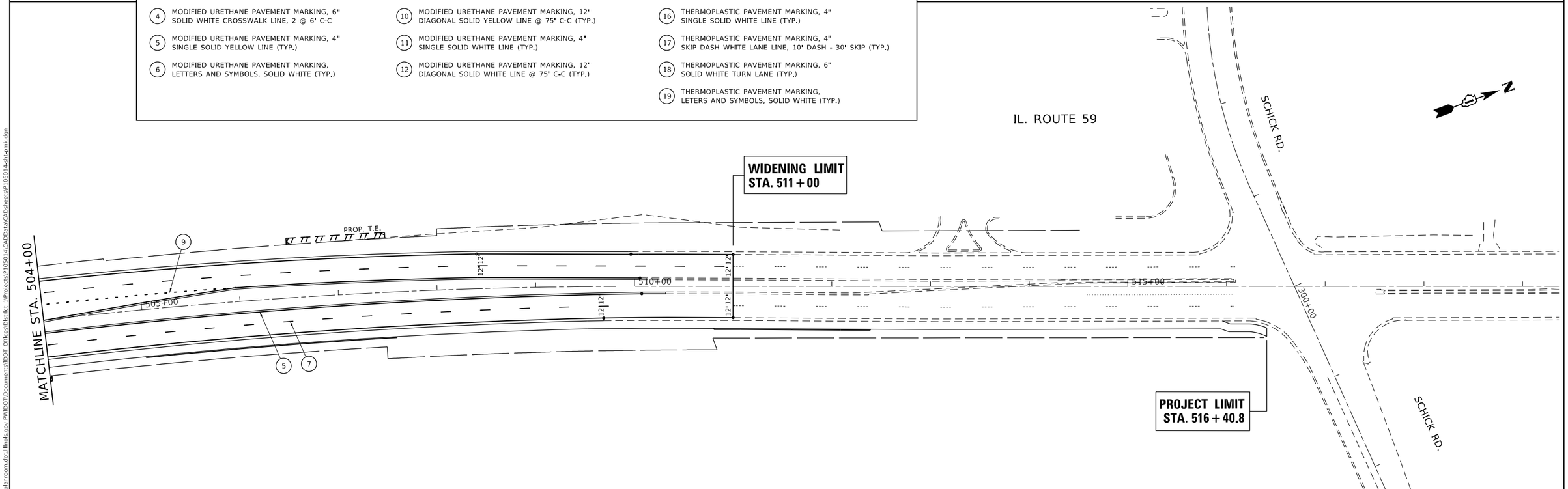

USER NAME = kalorm	DESIGNED -	REVISED - RK 05/03/2019
	DRAWN -	REVISED -
PLOT SCALE = 100.0000 ' / in.	CHECKED -	REVISED -
PLOT DATE = 4/30/2019	DATE -	REVISED -

STATE OF ILLINOIS
DEPARTMENT OF TRANSPORTATION

PAVEMENT MARKING PLAN
IL. ROUTE 59 (SUTTON ROAD) AT ARMY TRAIL ROAD

SCALE: 1"=50' | SHEET OF SHEETS | STA. TO STA.

F.A.P. RTE.	SECTION	COUNTY	TOTAL SHEETS	SHEET NO.
338	110TS-N	DUPAGE	133	57
		CONTRACT NO. 62F19		
		ILLINOIS	FED. AID PROJECT	

MODEL: Default
FILE NAME: pw:\\dbarroom.dot.illinois.gov:PWIDOT\Documents\IDOT Offices\District 1\Projects\P105014\CADData\CADsheets\P105014-sht-pmk.dgn

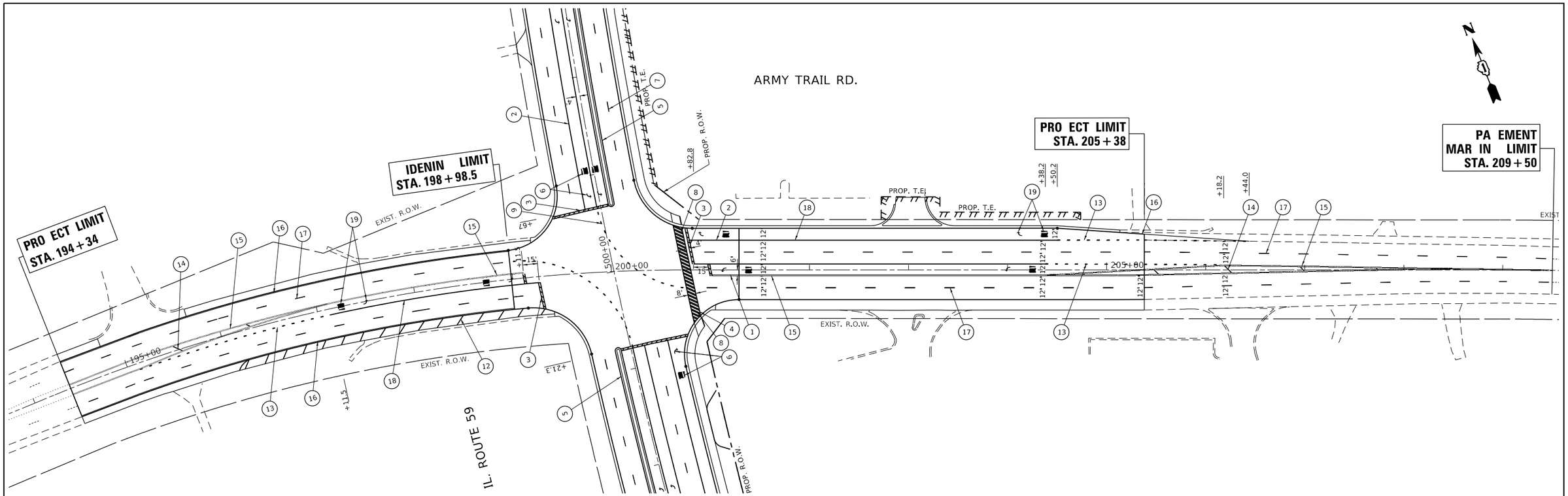

PA EMENT MAR IN LE END

1. MODIFIED URETHANE PAVEMENT MARKING, 4"
DOUBLE SOLID YELLOW CENTERLINE, 2 @ 11" C-C (TYP.)
2. MODIFIED URETHANE PAVEMENT MARKING, 6"
SOLID WHITE TURN LANE (TYP.)
3. MODIFIED URETHANE PAVEMENT MARKING, 24"
SOLID WHITE STOP BAR (TYP.)
4. MODIFIED URETHANE PAVEMENT MARKING, 6"
SOLID WHITE CROSSWALK LINE, 2 @ 6' C-C
5. MODIFIED URETHANE PAVEMENT MARKING, 4"
SINGLE SOLID YELLOW LINE (TYP.)
6. MODIFIED URETHANE PAVEMENT MARKING,
LETTERS AND SYMBOLS, SOLID WHITE (TYP.)
7. CONTRAST PREFORMED PLASTIC PAVEMENT MARKING, 4"
SKIP DASH WHITE LANE LINE, 10' DASH - 30' SKIP (TYP.)
8. MODIFIED URETHANE PAVEMENT MARKING, 12"
DIAGONAL SOLID WHITE LINE WITH 2' SPACE (TYP.)
9. MODIFIED URETHANE PAVEMENT MARKING, 6"
SKIP DASH WHITE TURN LANE, 2' LINE WITH 6' SPACE (TYP.)
10. MODIFIED URETHANE PAVEMENT MARKING, 12"
DIAGONAL SOLID YELLOW LINE @ 75' C-C (TYP.)
11. MODIFIED URETHANE PAVEMENT MARKING, 4"
SINGLE SOLID WHITE LINE (TYP.)
12. MODIFIED URETHANE PAVEMENT MARKING, 12"
DIAGONAL SOLID WHITE LINE @ 75' C-C (TYP.)
13. THERMOPLASTIC PAVEMENT MARKING, 6"
SKIP DASH WHITE TURN LANE, 2' LINE WITH 6' SPACE (TYP.)
14. THERMOPLASTIC PAVEMENT MARKING, 12"
DIAGONAL SOLID YELLOW LINE @ 75' C-C (TYP.)
15. THERMOPLASTIC PAVEMENT MARKING, 4"
DOUBLE SOLID YELLOW CENTERLINE, 2 @ 11" C-C (TYP.)
16. THERMOPLASTIC PAVEMENT MARKING, 4"
SINGLE SOLID WHITE LINE (TYP.)
17. THERMOPLASTIC PAVEMENT MARKING, 4"
SKIP DASH WHITE LANE LINE, 10' DASH - 30' SKIP (TYP.)
18. THERMOPLASTIC PAVEMENT MARKING, 6"
SOLID WHITE TURN LANE (TYP.)
19. THERMOPLASTIC PAVEMENT MARKING,
LETERS AND SYMBOLS, SOLID WHITE (TYP.)

MODEL: Default
FILE NAME: pw:\\ulanroom.dot.illinois.gov:PWIDOT\Documents\IDOT Offices\District 1\Projects\P105014\CADData\CADsheets\P105014-sht-pmk.dgn

USER NAME = kalorm	DESIGNED -	REVISED -	
	DRAWN -	REVISED -	
PLOT SCALE = 100.0000 ' / in.	CHECKED -	REVISED -	
PLOT DATE = 3/21/2019	DATE -	REVISED -	

STATE OF ILLINOIS
DEPARTMENT OF TRANSPORTATION

PAVEMENT MARKING PLAN
ARMY TRAIL ROAD ATIL. ROUTE 59 (SUTTON ROAD)

SCALE: 1"=50' | SHEET OF SHEETS | STA. TO STA.

F.A.P. RTE.	SECTION	COUNTY	TOTAL SHEETS	SHEET NO.
338	110TS-N	DUPAGE	133	58

CONTRACT NO. 62F19

ILLINOIS | FED. AID PROJECT

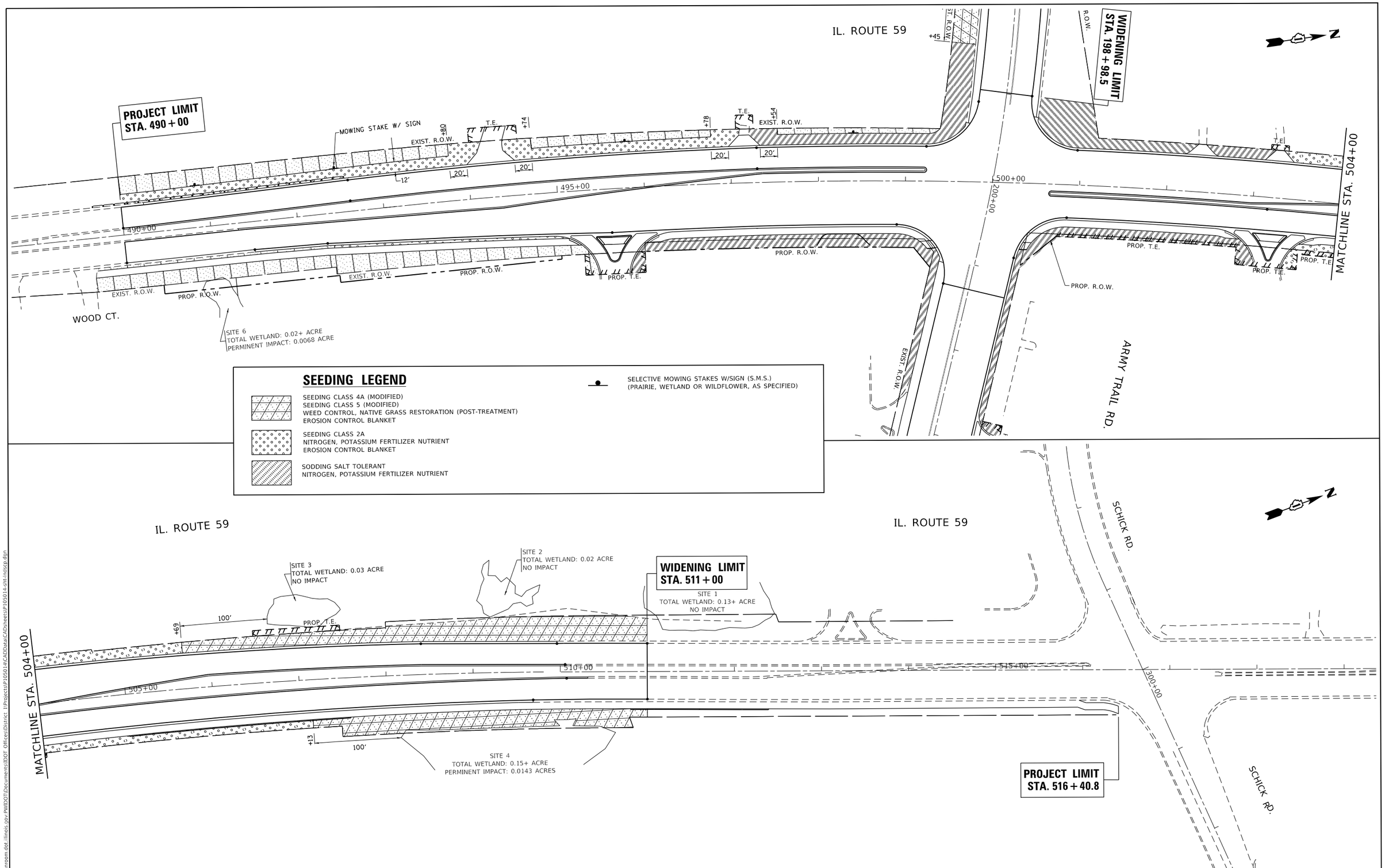

MODEL: Default
FILE NAME: pw:\\planroom.dot.illinois.gov:PWIDOT\Documents\IDOT Offices\District 1\Projects\P105014\CADData\CADsheets\P105014-sht-lndscp.dgn

USER NAME = kalorm	DESIGNED -	REVISED - RK 05/03/2019	
	DRAWN -	REVISED -	
PLOT SCALE = 100.0000 ' / in.	CHECKED -	REVISED -	
PLOT DATE = 4/30/2019	DATE -	REVISED -	

STATE OF ILLINOIS
DEPARTMENT OF TRANSPORTATION

LANDSCAPING PLAN
IL. ROUTE 59 (SUTTON ROAD) AT ARMY TRAIL ROAD

SCALE: 1"=50' | SHEET OF SHEETS | STA. TO STA.

F.A. RTE.	SECTION	COUNTY	TOTAL SHEETS	SHEET NO.
			133	59

CONTRACT NO.

ILLINOIS | FED. AID PROJECT

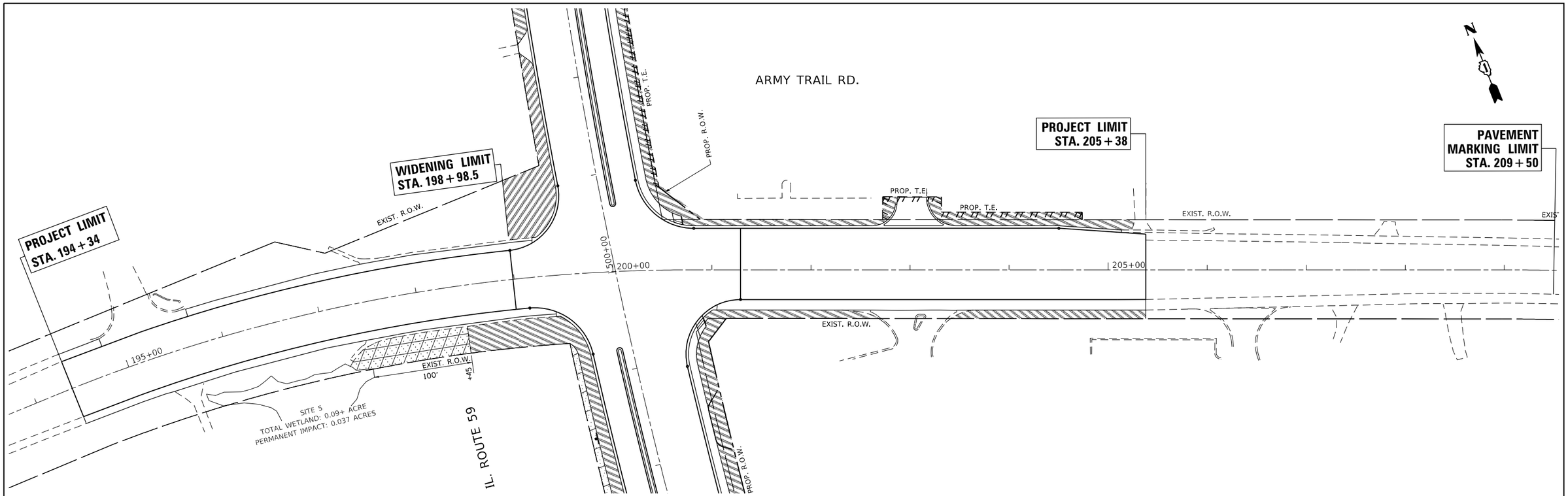

SEEDING LEGEND

SEEDING CLASS 4A (MODIFIED)
SEEDING CLASS 5 (MODIFIED)
WEED CONTROL, NATIVE GRASS RESTORATION (POST-TREATMENT)
EROSION CONTROL BLANKET

SEEDING CLASS 2A
NITROGEN, POTASSIUM FERTILIZER NUTRIENT
EROSION CONTROL BLANKET

SODDING SALT TOLERANT
NITROGEN, POTASSIUM FERTILIZER NUTRIENT

SELECTIVE MOWING STAKES W/SIGN (S.M.S.)
(PRAIRIE, WETLAND OR WILDFLOWER, AS SPECIFIED)

MODEL: Default
FILE NAME: pw:\\uborroom.dot.illinois.gov:PWIDOT\Documents\IDOT Offices\District 1\Projects\P105014\CADData\CADsheets\P105014-sht-hndscp.dgn

USER NAME = kalorm	DESIGNED -	REVISED -	
	DRAWN -	REVISED -	
PLOT SCALE = 100.0000 ' / in.	CHECKED -	REVISED -	
PLOT DATE = 3/21/2019	DATE -	REVISED -	

STATE OF ILLINOIS
DEPARTMENT OF TRANSPORTATION

LANDSCAPING PLAN
ARMY TRAIL ROAD AT IL. ROUTE 59 (SUTTON ROAD)

SCALE: 1"=50' | SHEET OF SHEETS | STA. TO STA.

F.A.P. RTE.	SECTION	COUNTY	TOTAL SHEETS	SHEET NO.
338	110TS-N	DUPAGE	133	60

CONTRACT NO. 62F19

ILLINOIS | FED. AID PROJECT

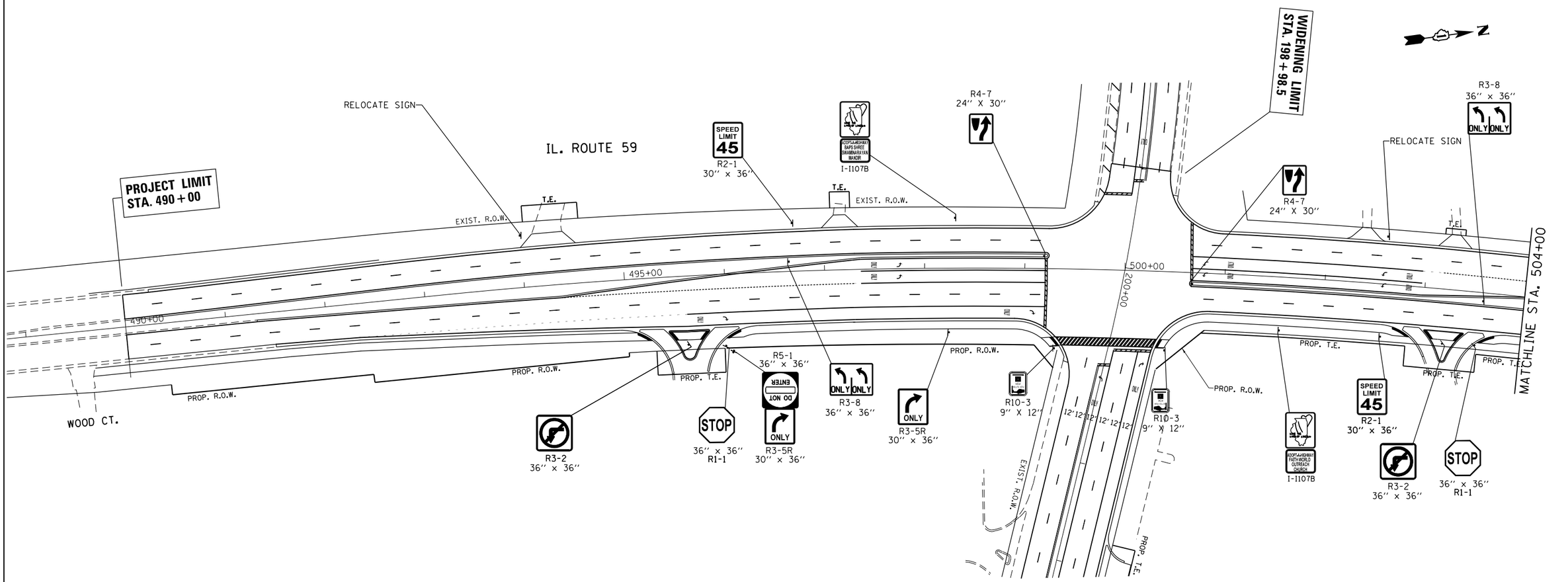

FILE NAME = pw:\\planroom.dot.illinois.gov:PWIDOT\Documents\IDOT Offices\District 1\Projects\P105014\CADData\Design\P105014-sht-001.dgn Default	USER NAME = kalorm	DESIGNED -	REVISED -
		DRAWN -	REVISED -
	PLOT SCALE = 100.0000 ' / in.	CHECKED -	REVISED -
	PLOT DATE = 3/21/2019	DATE -	REVISED -

STATE OF ILLINOIS
DEPARTMENT OF TRANSPORTATION

PROPOSED SIGNAGE PLAN
IL ROUTE 59 AT ARMY TRAIL ROAD

SCALE: | SHEET OF SHEETS | STA. TO STA.

F.A.P. RTE.	SECTION	COUNTY	TOTAL SHEETS	SHEET NO.
338	110TS-N	DUPAGE	133	61
		CONTRACT NO. 62F19		
	ILLINOIS	FED. AID PROJECT		

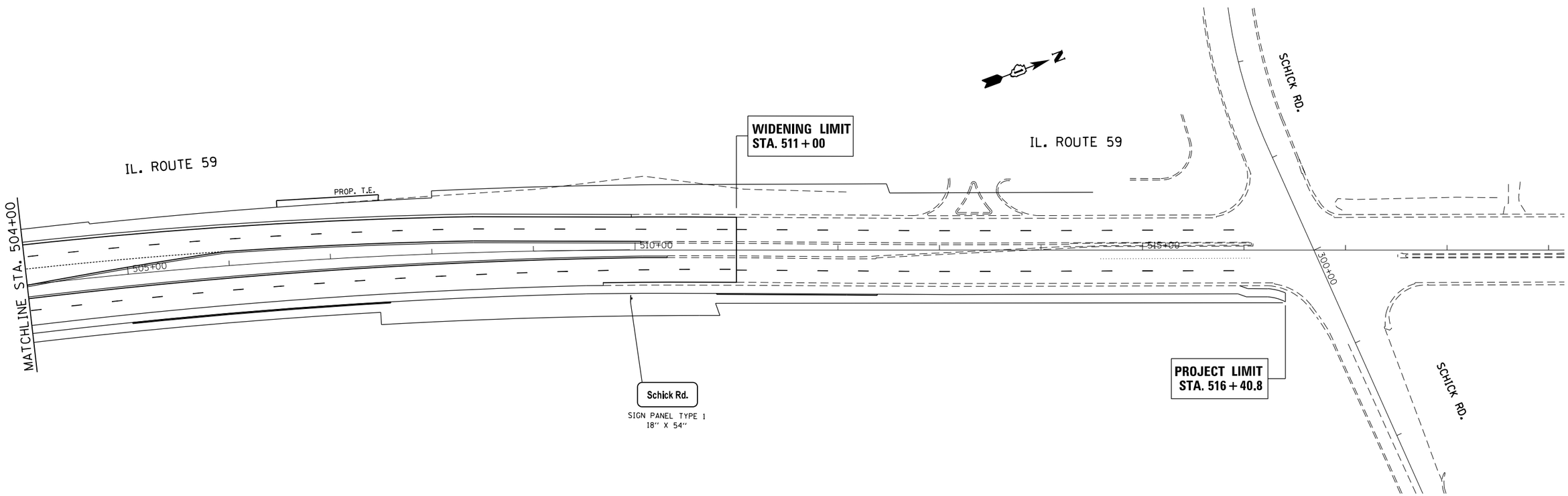

FILE NAME =	USER NAME = kalorm	DESIGNED -	REVISED - RK 05/03/2019	STATE OF ILLINOIS DEPARTMENT OF TRANSPORTATION	PROPOSED SIGNAGE PLAN IL ROUTE 59 AT ARMY TRAIL ROAD	F.A.P. RTE.	SECTION	COUNTY	TOTAL SHEETS / SHEET NO.
pw:\\planroom.dot.illinois.gov:PWIDOT\Documents\IDOT Offices\District 1\Projects\P105014\CADData\Design\P105014-sht-SIGN.dgn		DRAWN -	REVISED -			338	110TS-N	DUPAGE	133 / 62
	PLOT SCALE = 100.0000 ' / in.	CHECKED -	REVISED -					CONTRACT NO. 62F19	
Default	PLOT DATE = 4/30/2019	DATE -	REVISED -		SCALE: SHEET OF SHEETS STA. TO STA.		ILLINOIS	FED. AID PROJECT	

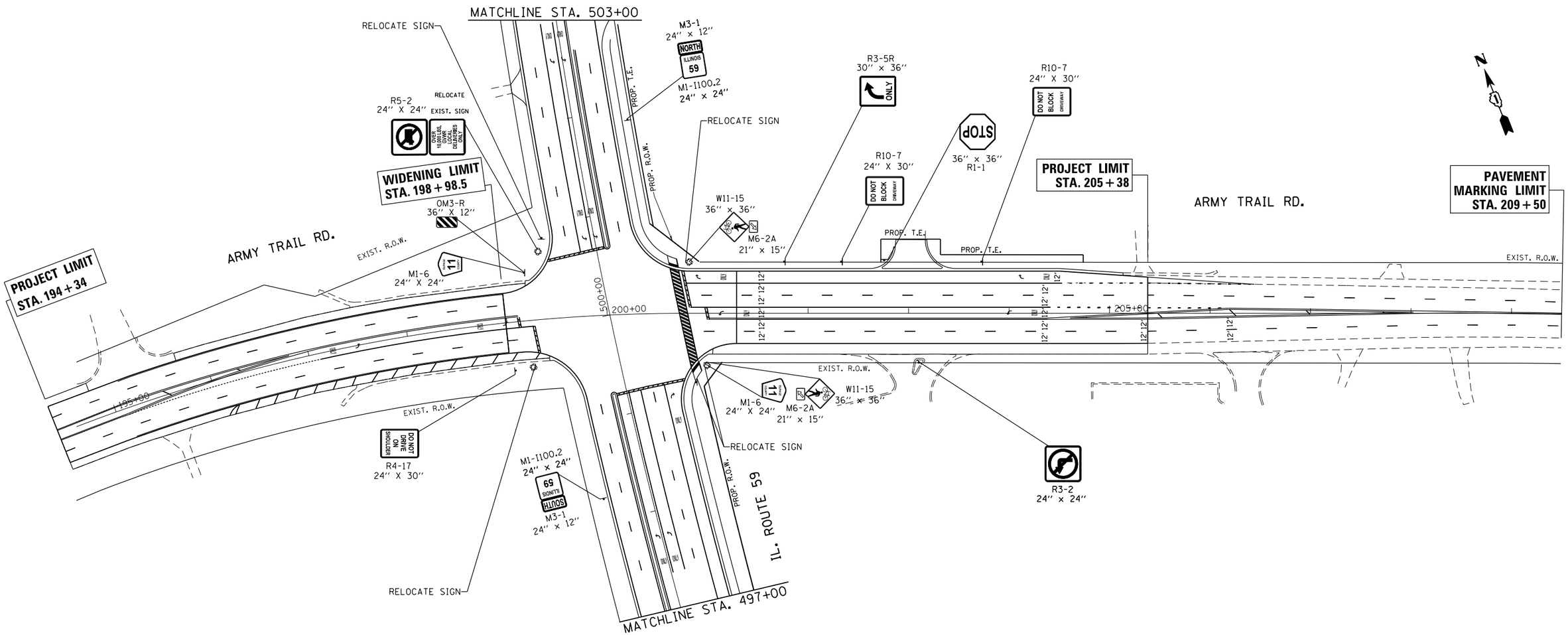

FILE NAME =	USER NAME = kalorm	DESIGNED -	REVISED -
pw:\\planroom.dot.illinois.gov:PW\IDOT\Documents\IDOT Offices\District 1\Projects\P105014\CADData\Design\P105014-sh-001.dgn		DRAWN -	REVISED -
	PLOT SCALE = 100.0000 ' / in.	CHECKED -	REVISED -
Default	PLOT DATE = 3/21/2019	DATE -	REVISED -

STATE OF ILLINOIS
DEPARTMENT OF TRANSPORTATION

PROPOSED SIGNAGE PLAN
IL ROUTE 59 AT ARMY TRAIL ROAD

SCALE: | SHEET OF SHEETS | STA. TO STA.

F.A.P. RTE.	SECTION	COUNTY	TOTAL SHEETS	SHEET NO.
338	110TS-N	DUPAGE	133	63

CONTRACT NO. 62F19

ILLINOIS | FED. AID PROJECT

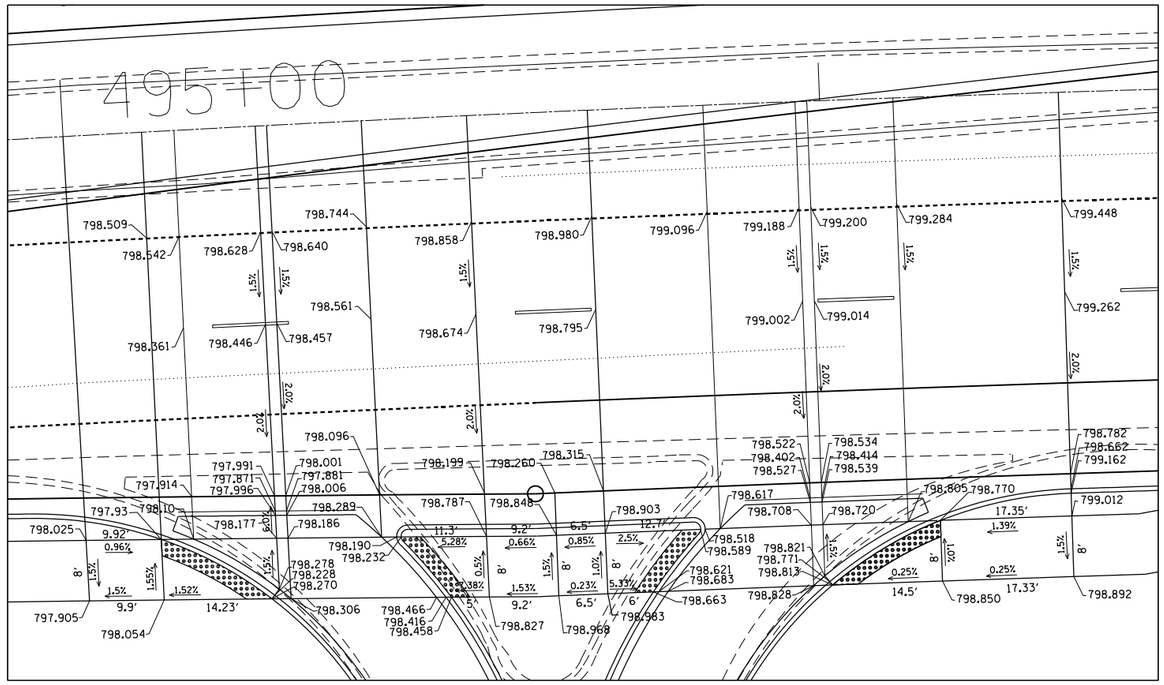

LEGEND

		PROPOSED SHARED USE PATH	CLASS D PATCH
xx.xx'	EXISTING LENGTH	PROPOSED SIDE CURB	DETECTABLE WARNINGS
( )	EXISTING ELEVATION/SLOPE	SC TOP OF PROPOSED SIDE CURB	SIDEWALK REMOVAL REPLACE W/TOPSOIL & SOD

REFERENCE BENCHMARK ELEV: 794.22

BENCHMARK: SPIKE W/ YELLOW SLEEVE IN POWER POLE

LOCATION: E. SIDE OF IL 59 1200' S. OF ARMY TRAIL (RESIDENCE #4N761)

FILE NAME = pw:\\planroom.dot.illinois.gov:PWIDOT\Documents\IDOT Offices\District 1\Projects\P105014\DRAWING\Design\P105014-sht-details.dgn	USER NAME = kalorm	DESIGNED -	REVISED -
			REVISED -
	PLOT SCALE = 100.0000 ' / in.	CHECKED -	REVISED -
Default	PLOT DATE = 3/21/2019	DATE -	REVISED -

STATE OF ILLINOIS
DEPARTMENT OF TRANSPORTATION

SIDEWALK DETAIL PLAN
IL 59 AT STA. 495+60 RT

SCALE: | SHEET OF SHEETS | STA. TO STA.

F.A.P. RTE.	SECTION	COUNTY	TOTAL SHEETS	SHEET NO.
338	110TS-N	DUPAGE	133	64

CONTRACT NO. 62F19

ILLINOIS FED. AID PROJECT

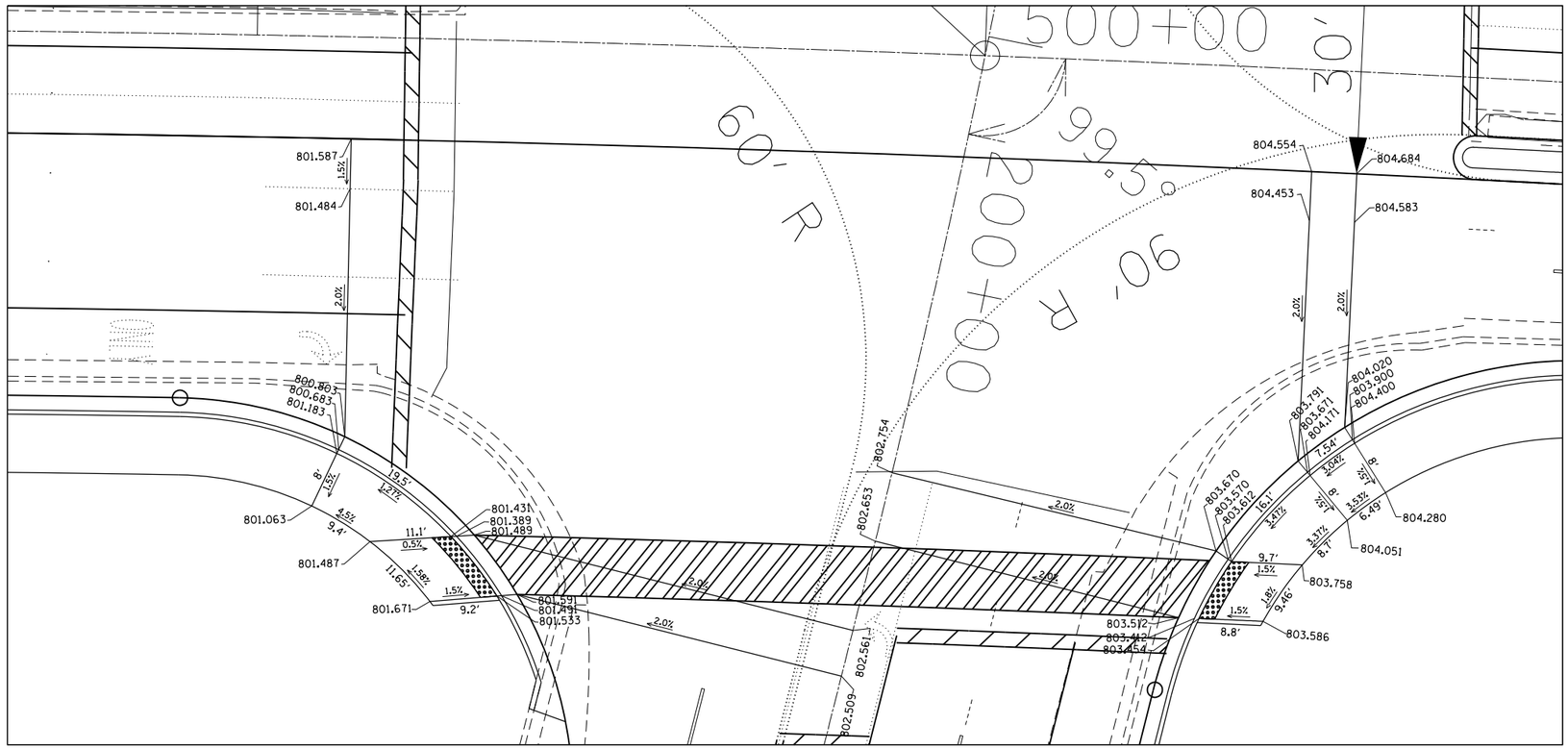

LEGEND

xx.xx'	EXISTING LENGTH
( )	EXISTING ELEVATION/SLOPE
	PROPOSED SHARED USE PATH
	PROPOSED SIDE CURB
SC	TOP OF PROPOSED SIDE CURB
	CLASS D PATCH
	DETECTABLE WARNINGS
	SIDEWALK REMOVAL REPLACE W/TOPSOIL & SOD

REFERENCE BENCHMARK ELEV: 807.24

BENCHMARK: NOTCH IN SW CORNER OF CONCRETE BASE OF TRAFFIC SIGNAL

LOCATION: NE CORNER OF IL 59 AND ARMY TRAIL RD.

FILE NAME = pw:\\planroom.dot.illinois.gov:PWIDOT\Documents\IDOT Offices\District 1\Projects\P105014\DrawingS\Design\P105014-sht-details.dgn	USER NAME = kalorm	DESIGNED -	REVISED -
		DRAWN -	REVISED -
	PLOT SCALE = 100.0000 ' / in.	CHECKED -	REVISED -
Default	PLOT DATE = 3/21/2019	DATE -	REVISED -

STATE OF ILLINOIS
DEPARTMENT OF TRANSPORTATION

SIDEWALK DETAIL PLAN
IL 59 AT ARMY TRAIL RD.

SCALE: SHEET OF SHEETS STA. TO STA.

F.A.P. RTE.	SECTION	COUNTY	TOTAL SHEETS	SHEET NO.
338	110TS-N	DUPAGE	133	65

CONTRACT NO. 62F19

ILLINOIS FED. AID PROJECT

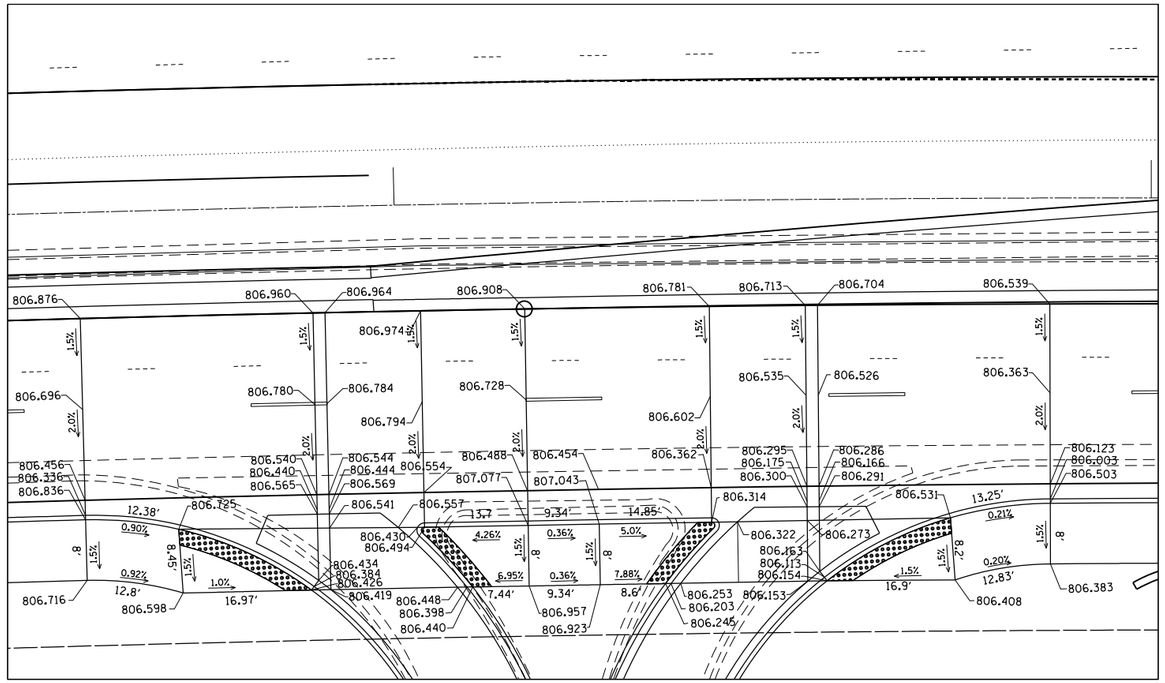

LEGEND

		PROPOSED SHARED USE PATH	CLASS D PATCH
xx.xx'	EXISTING LENGTH	PROPOSED SIDE CURB	DETECTABLE WARNINGS
( )	EXISTING ELEVATION/SLOPE	SC TOP OF PROPOSED SIDE CURB	SIDEWALK REMOVAL REPLACE W/TOPSOIL & SOD

REFERENCE BENCHMARK ELEV: 807.24

BENCHMARK: NOTCH IN SW CORNER OF CONCRETE BASE OF TRAFFIC SIGNAL

LOCATION: NE CORNER OF IL 59 AND ARMY TRAIL RD.

FILE NAME = pw:\\planroom.dot.illinois.gov:PWIDOT\Documents\IDOT Offices\District 1\Projects\P105014\DraftingFiles\Design\P105014-sht-details.dgn	USER NAME = kalorm	DESIGNED -	REVISED -
		DRAWN -	REVISED -
	PLOT SCALE = 100.0000 ' / in.	CHECKED -	REVISED -
Default	PLOT DATE = 3/21/2019	DATE -	REVISED -

STATE OF ILLINOIS
DEPARTMENT OF TRANSPORTATION

SIDEWALK DETAIL PLAN
IL 59 AT SCHICK ROAD

SCALE: SHEET OF SHEETS STA. TO STA.

F.A.P. RTE.	SECTION	COUNTY	TOTAL SHEETS	SHEET NO.
338	110TS-N	DUPAGE	133	66

CONTRACT NO. 62F19

ILLINOIS FED. AID PROJECT

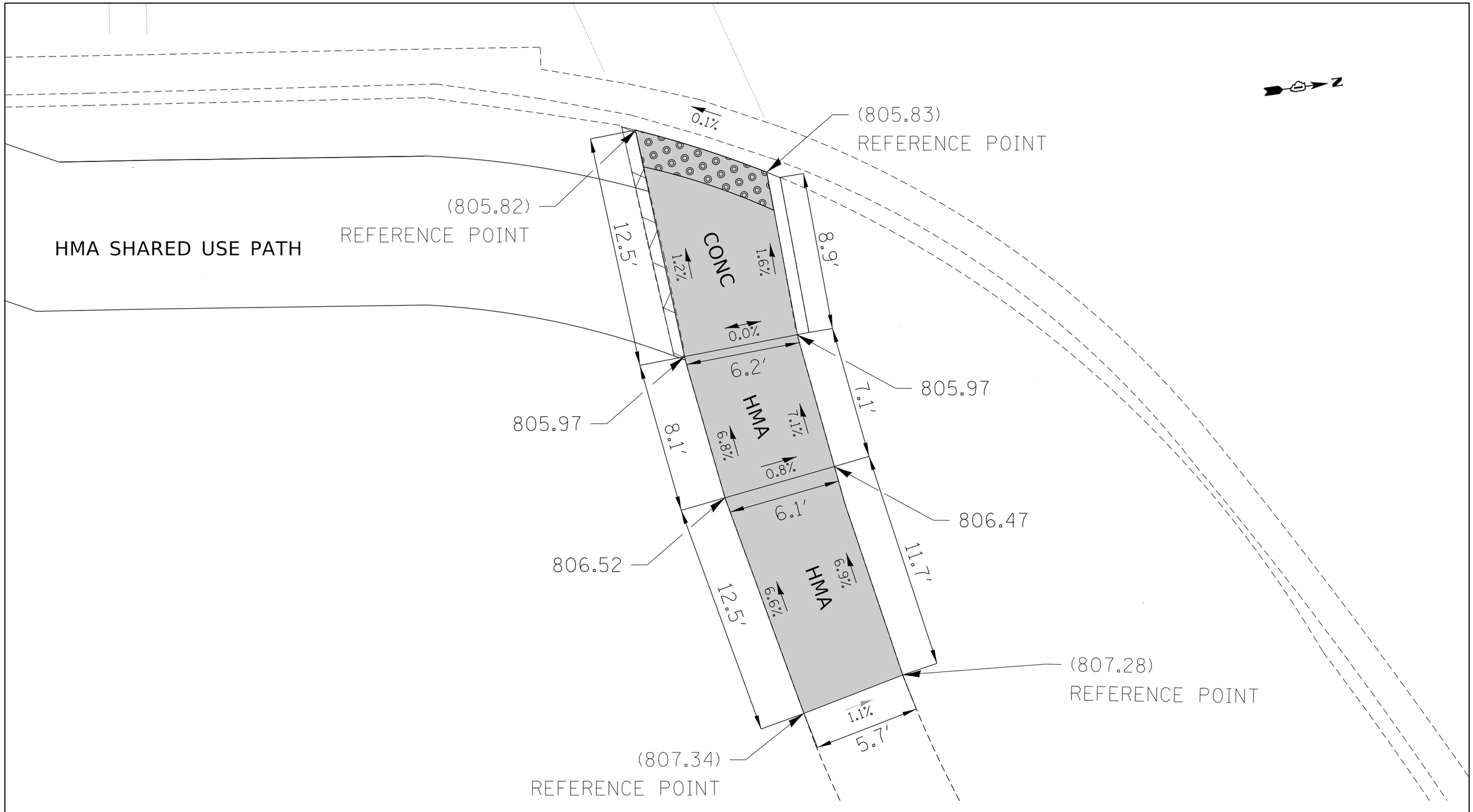

LEGEND

xx.xx'	EXISTING LENGTH		PROPOSED SHARED USE PATH
( )	EXISTING ELEVATION/SLOPE		PROPOSED SIDE CURB
		SC	TOP OF PROPOSED SIDE CURB
			CLASS D PATCH
			DETECTABLE WARNINGS
			SIDEWALK REMOVAL REPLACE W/TOPSOIL & SOD

REFERENCE BENCHMARK ELEV: 806.72

BENCHMARK: CROSS CUT IN NW CORNER OF TRAFFIC SIGNAL HANDHOLE

LOCATION: NW CORNER OF IL 59 AND SCHICK RD.

FILE NAME = pw:\\planroom.dot.illinois.gov:PWIDOT\Documents\IDOT Offices\District 1\Projects\P105014\DRAWING\Design\P105014-sht-details.dgn	USER NAME = kalorm	DESIGNED -	REVISED -
		DRAWN -	REVISED -
	PLOT SCALE = 100.0000 ' / in.	CHECKED -	REVISED -
Default	PLOT DATE = 3/21/2019	DATE -	REVISED -

STATE OF ILLINOIS
DEPARTMENT OF TRANSPORTATION

SIDEWALK DETAIL PLAN
IL 59 AT STA. 503+17 RT

SCALE: | SHEET OF SHEETS | STA. TO STA.

F.A.P. RTE.	SECTION	COUNTY	TOTAL SHEETS	SHEET NO.
338	110TS-N	DUPAGE	133	67
		CONTRACT NO. 62F19		
		ILLINOIS FED. AID PROJECT		

TRAFFIC SIGNAL LEGEND

(NOT TO SCALE)

ITEM	EXISTING	PROPOSED
CONTROLLER CABINET		
COMMUNICATION CABINET	ECC	CC
MASTER CONTROLLER	EMC	MC
MASTER MASTER CONTROLLER	EMMC	MMC
UNINTERRUPTABLE POWER SUPPLY		
SERVICE INSTALLATION -(P) POLE MOUNTED	P	P
SERVICE INSTALLATION -(G) GROUND MOUNTED -(GM) GROUND MOUNTED METERED	G GM	G GM
TELEPHONE CONNECTION	ET	T
STEEL MAST ARM ASSEMBLY AND POLE		
ALUMINUM MAST ARM ASSEMBLY AND POLE		
STEEL COMBINATION MAST ARM ASSEMBLY AND POLE WITH LUMINAIRE		
SIGNAL POST -(BM) BARREL MOUNTED - TEMPORARY		BM
WOOD POLE		
GUY WIRE		
SIGNAL HEAD		
SIGNAL HEAD WITH BACKPLATE		
SIGNAL HEAD OPTICALLY PROGRAMMED	P P	P P
FLASHER INSTALLATION -(FS) SOLAR POWERED	F FS F FS	F FS F FS
PEDESTRIAN SIGNAL HEAD		
PEDESTRIAN PUSH BUTTON -(APS) ACCESSIBLE PEDESTRIAN PUSH BUTTON	APS	APS
RADAR DETECTION SENSOR	R	R
VIDEO DETECTION CAMERA	V	V
RADAR/VIDEO DETECTION ZONE		
PAN, TILT, ZOOM (PTZ) CAMERA	PTZ	PTZ
EMERGENCY VEHICLE LIGHT DETECTOR		
CONFIMATION BEACON		
WIRELESS INTERCONNECT		
WIRELESS INTERCONNECT RADIO REPEATER	ERR	RR

ITEM	EXISTING	PROPOSED
HANDHOLE -SQUARE -ROUND		
HEAVY DUTY HANDHOLE -SQUARE -ROUND	H H	H H
DOUBLE HANDHOLE		
JUNCTION BOX		
RAILROAD CANTILEVER MAST ARM		
RAILROAD FLASHING SIGNAL		
RAILROAD CROSSING GATE		
RAILROAD CROSSBUCK		
RAILROAD CONTROLLER CABINET		
UNDERGROUND CONDUIT (UC), GALVANIZED STEEL		
TEMPORARY SPAN WIRE, TETHER WIRE, AND CABLE		
SYSTEM ITEM	S	SP
INTERSECTION ITEM	I	IP
REMOVE ITEM		R
RELOCATE ITEM		RL
ABANDON ITEM		A
CONTROLLER CABINET AND FOUNDATION TO BE REMOVED		RCF
MAST ARM POLE AND FOUNDATION TO BE REMOVED		RMF
SIGNAL POST AND FOUNDATION TO BE REMOVED		RPF
DETECTOR LOOP, TYPE I		
PREFORMED DETECTOR LOOP	P P	P P
SAMPLING (SYSTEM) DETECTOR	S S	S S
INTERSECTION AND SAMPLING (SYSTEM) DETECTOR	IS IS	IS IS
QUEUE AND SAMPLING (SYSTEM) DETECTOR	QS QS	QS QS
WIRELESS DETECTOR SENSOR	W	W
WIRELESS ACCESS POINT		

ITEM	EXISTING	PROPOSED
SIGNAL HEAD -(P) PROGRAMMABLE SIGNAL HEAD	P	P
SIGNAL HEAD WITH BACKPLATE -(P) PROGRAMMABLE SIGNAL HEAD -(RB) RETROREFLECTIVE BACKPLATE	P RB	P RB
PEDESTRIAN SIGNAL HEAD AT RAILROAD INTERSECTIONS		
PEDESTRIAN SIGNAL HEAD WITH COUNTDOWN TIMER	C D	C D
ILLUMINATED SIGN "NO LEFT TURN"/"NO RIGHT TURN"		
NUMBER OF CONDUCTORS, ELECTRIC CABLE NO. 14, UNLESS NOTED OTHERWISE. ALL DETECTOR LOOP CABLE TO BE SHIELDED	5	5
GROUND CABLE IN CONDUIT, NO. 6 SOLID COPPER (GREEN)	1#6	1#6
ELECTRIC CABLE IN CONDUIT, TRACER NO. 14 1/C	1	1
COAXIAL CABLE	C	C
VENDOR CABLE	V	V
COPPER INTERCONNECT CABLE, NO. 18, 3 PAIR TWISTED, SHIELDED	6#18	6#18
FIBER OPTIC CABLE -NO. 62.5/125, MM12F -NO. 62.5/125, MM12F SM12F -NO. 62.5/125, MM12F SM24F	12F 24F 36F	12F 24F 36F
GROUND ROD -(C) CONTROLLER -(M) MAST ARM -(P) POST -(S) SERVICE	C M P S	C M P S

TS SHT NO. 1

FILE NAME = S:\WP\Design\Iovan\SamplePlans-DO.NOT.USE\DGNFiles\Legend.06-08-16.dgn	USER NAME = placencia1	DESIGNED - IP	REVISED -
		DRAWN - IP	REVISED -
	PLOT SCALE = 100.0000 ' / in.	CHECKED - LP	REVISED -
Default	PLOT DATE = 6/10/2016	DATE - 6/8/2016	REVISED -

STATE OF ILLINOIS
DEPARTMENT OF TRANSPORTATION

DISTRICT ONE
STANDARD TRAFFIC SIGNAL DESIGN DETAILS

SCALE: NONE | SHEET 1 OF 7 SHEETS | STA. TO STA.

F.A.P. RTE.	SECTION	COUNTY	TOTAL SHEETS	SHEET NO.
338	110TS-N	DUPAGE	133	68
	TS-05	CONTRACT NO. 62F19		
	ILLINOIS FED. AID PROJECT			

LOOP DETECTOR NOTES

1. EACH PAIR OF LOOP WIRES SHALL BE PLACED IN A SEPARATE EMPTY COILABLE NONMETALLIC CONDUIT FROM THE EDGE OF PAVEMENT TO THE HANDHOLE. SPACING BETWEEN THE HOLES DRILLED IN THE PAVEMENT SHALL NOT BE LESS THAN 6" (150 mm). EMPTY COILABLE NONMETALLIC CONDUIT SHALL BE INCLUDED IN THE COST OF THE LOOP WIRE.

2. THE NUMBER OF LOOP TURNS SHALL BE AS RECOMMENDED BY THE AMPLIFIER MANUFACTURER. ALL ADJACENT SIDES OF THE LOOPS SHALL BE INSTALLED IN SUCH A WAY THAT THE CURRENT FLOW IS IN THE SAME DIRECTION TO REINFORCE ITS MAGNETIC FIELDS FOR SMALL VEHICLE DETECTION.

3. EACH LOOP LEAD-IN SHALL BE IDENTIFIED AND PERMANENTLY TAGGED IN THE HANDHOLE. EACH LEAD-IN CABLE TAG SHALL INDICATE THE LOCATION OF THE LOOP, LOOP ROTATION (CLOCKWISE/COUNTERCLOCKWISE), LOOP LEAD-IN DIRECTION (IN OR OUT), LOOP CABLE NUMBER AND LOCATION IN CABINET, AND NUMBER OF TURNS IN THE DETECTOR LOOPS IN WATER PROOF INK AS INDICATED ON THE DISTRICT 1 STANDARD TRAFFIC SIGNAL DESIGN DETAIL. THE CONTRACTOR SHALL MARK LOOP LOCATIONS ON RECORD DRAWINGS AND PRESENT TO THE ENGINEER AFTER FINAL INSPECTION. LOOPS SHALL BE MARKED BY LANE AND LOOP NUMBER. SEE DETAIL BELOW.

4. ALL LOOP CABLE SHALL BE FASTENED WITH PLASTIC TIE WRAP TO THE HANDHOLE HOOKS.

5. IN ASPHALT PAVEMENT, LOOPS SHOULD BE PLACED IN THE BINDER AND DIVEHOLES MARKED AT THE CURB WITH A SAW-CUT. THE SAW-CUT SHALL BE CUT IN ACCORDANCE WITH LOCAL AND E.P.A. DUST CONTROL REQUIREMENTS. DETECTOR LOOP(S) SHALL NOT BE INSTALLED IN WET CONDITIONS AND THE SAW-CUTS MUST BE FREE OF DEBRIS AND RESIDUE SUCH AS DUST AND WATER WHICH IS TO BE ACHIEVED BY THE USE OF COMPRESSED AIR, WIRE BRUSHING AND HEAT DRYING ACCORDING TO SEALANT MANUFACTURER REQUIREMENTS. THE DETECTOR WIRE SHALL BE HELD IN PLACE BY THE USE OF FORM WEDGES. WEDGES SHALL BE SPACED NO MORE THAN 18" (450 mm) APART.

6. LOOP SPLICES SHALL BE SOLDERED USING A SOLDERING IRON. BLOW TORCHES OR OTHER DEVICES WHICH OXIDIZE COPPER CABLE SHALL NOT BE ALLOWED FOR SOLDERING OPERATIONS. SEE DETAIL BELOW RIGHT.

7. PREFORMED DETECTOR LOOPS SHALL BE USED, AS SHOWN ON THE PLANS, WHERE NEW CONCRETE PAVEMENT IS PROPOSED. THE INSTALLATION OF PREFORMED LOOPS SHALL BE IN ACCORDANCE WITH THE DISTRICT 1 SPECIFICATIONS OR AS DIRECTED BY THE ENGINEER.

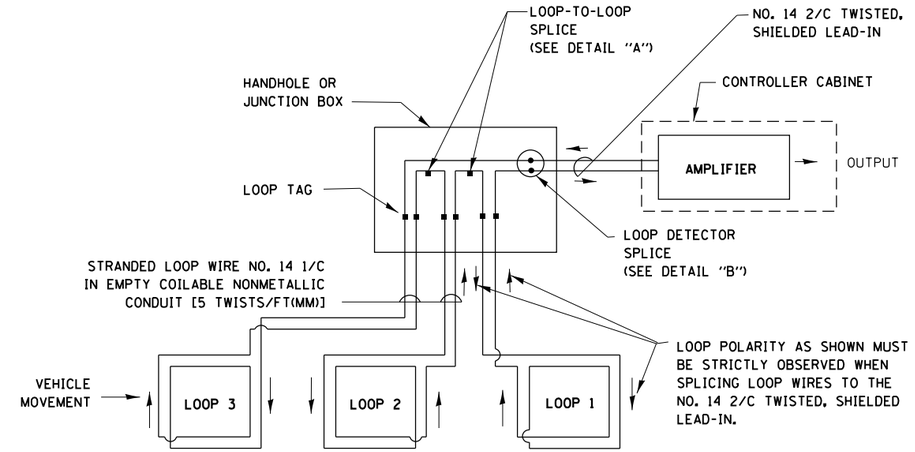

DETECTOR LOOP WIRING SCHEMATIC

- LOOPS SHALL BE SPLICED IN SERIES.
- SAW-CUTS SHALL BE A MINIMUM WIDTH OF 5/16" (8 mm).
- SAW-CUT DEPTHS SHALL BE 3" (75 mm). IF IN CONCRETE, THE SAW-CUT DEPTH SHALL BE TO THE TOP OF THE REINFORCEMENT.
- LOOP CORNERS SHALL BE DRILLED WITH A 2" (50 mm) DIAMETER CORE.

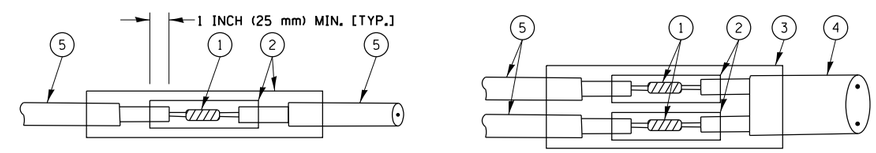

DETAIL "A"
LOOP-TO-LOOP SPLICE

DETAIL "B"
LOOP-TO-CONTROLLER SPLICE

TYPE I LOOP

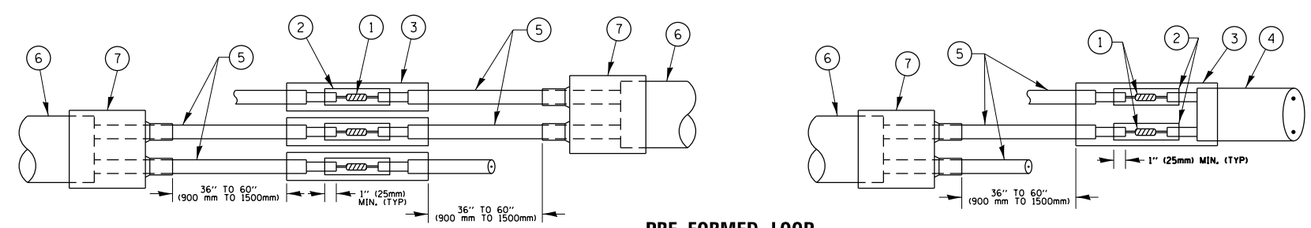

DETAIL "A"
LOOP-TO-LOOP SPLICE

PRE-FORMED LOOP

DETAIL "B"
LOOP-TO-CONTROLLER SPLICE

LOOP LEAD-IN CABLE TAG

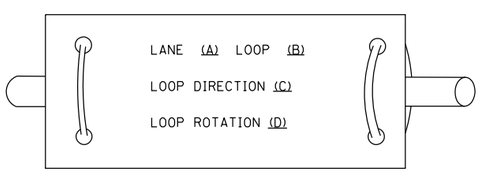

A. LANE 1 IS THE LANE CLOSEST TO THE CENTERLINE OF THE ROADWAY

B. LOOP #1 IS THE LOOP IN THE LANE CLOSEST TO THE INTERSECTION.

C. LABEL LOOP CABLE "IN" OR LOOP CABLE "OUT".

D. LABEL LOOP CABLE CLOCKWISE OR LOOP CABLE COUNTERCLOCKWISE.

LOOP DETECTOR SPLICE

1. WESTERN UNION SPLICE SOLDERED WITH ROSIN CORE FLUX. ALL EXPOSED SURFACES OF THE SOLDER SHALL BE SMOOTH. THE WESTERN UNION SPLICES SHALL BE STAGGERED.
2. WCSMW 30/100 HEAT SHRINK TUBE, MINIMUM LENGTH 3" (75 mm), UNDERWATER GRADE.
3. WCS 200/750 HEAT SHRINK TUBE, MINIMUM LENGHT 6" (150 mm), UNDERWATER GRADE.
4. NO. 14 2/C TWISTED, SHIELDED CABLE.
5. LOOP CONDUCTOR WITH FLEXIBLE PLASTIC TUBE.
6. PRE-FORMED LOOP
7. XL POLYOLEFIN 2 CONDUCTOR BREAKOUT SEALS. TYCO CBR-2 OR APPROVED EQUAL

FILE NAME = pw:\\planroom.dot.illinois.gov:PWIDOT\Documents\IDOT Offices\District 1\Projects\P105014\DRAWINGS\Design\DistStd.dgn	USER NAME = kalorm	DESIGNED -	REVISED -
		DRAWN -	REVISED -
	PLOT SCALE = 100.0000 ' / in.	CHECKED -	REVISED -
Default	PLOT DATE = 3/21/2019	DATE -	REVISED -

STATE OF ILLINOIS
DEPARTMENT OF TRANSPORTATION

DISTRICT ONE
STANDARD TRAFFIC SIGNAL DESIGN DETAILS

SCALE: NONE | SHEET 2 OF 7 SHEETS | STA. TO STA.

F.A.P RTE.	SECTION	COUNTY	TOTAL SHEETS	SHEET NO.
338	110TS-N	DUPAGE	133	69
	TS-05	CONTRACT NO. 62F19		
	ILLINOIS FED. AID PROJECT			

TRAFFIC SIGNAL MAST ARM AND SIGNAL POST

MAST ARM MOUNTED SIGNALS IN EXISTING, PROPOSED OR FUTURE SIDEWALK/BICYCLE PATH AREA. INTERSECTION SHOWN WITH PEDESTRIAN SIGNALS AND PEDESTRIAN PUSHBUTTON DETECTORS.

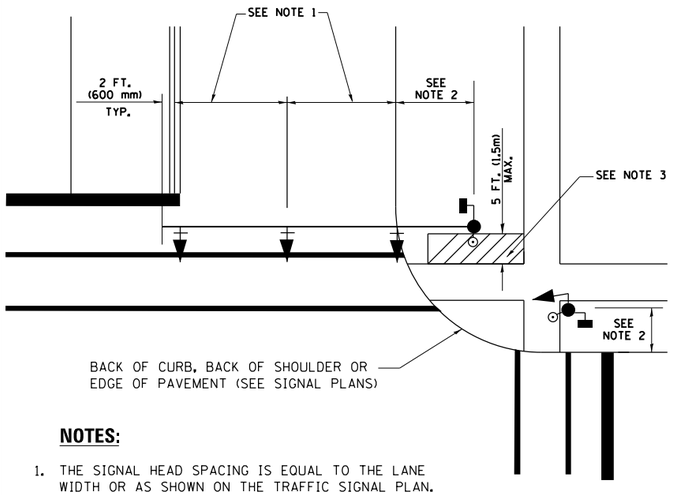

NOTES:

1. THE SIGNAL HEAD SPACING IS EQUAL TO THE LANE WIDTH OR AS SHOWN ON THE TRAFFIC SIGNAL PLAN.
2. REFER TO THE TRAFFIC SIGNAL EQUIPMENT OFFSET TABLE.
3. PROVIDE A LEVEL ALL-WEATHER SURFACE (CONCRETE SIDEWALK, ASPHALT BICYCLE PATH SURFACE OR MATCHING MATERIAL TO THE ADJACENT SURFACE) UP TO THE MAST ARM SHAFT OR THE SIGNAL POST.
4. THE FACE OF THE PEDESTRIAN PUSHBUTTON SHALL BE PARALLEL TO THE CROSSWALK TO BE USED.
5. THE LOCATIONS AND INSTALLATION OF PEDESTRIAN SIGNAL HEADS AND PEDESTRIAN PUSHBUTTONS SHALL MEET THE REQUIREMENTS OF THE MUTCD AND INFORMATION FOUND IN THE "AMERICANS WITH DISABILITIES ACT ACCESSIBILITY GUIDELINES FOR BUILDINGS AND FACILITIES."

PEDESTRIAN SIGNAL POST AND PEDESTRIAN PUSH BUTTON POST

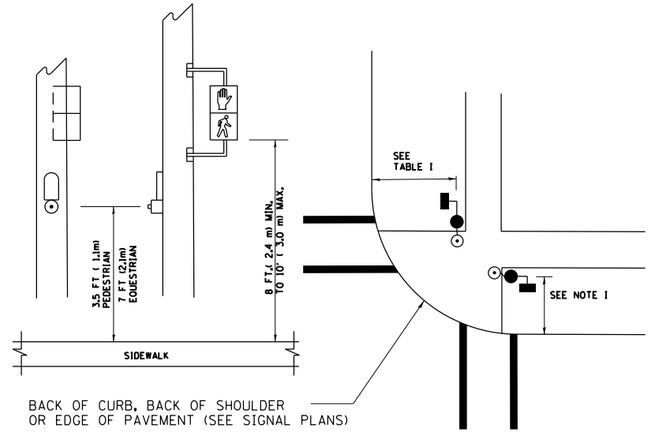

NOTES:

1. REFER TO THE TRAFFIC SIGNAL EQUIPMENT OFFSET TABLE.
2. PROVIDE A LEVEL ALL-WEATHER SURFACE (CONCRETE SIDEWALK, ASPHALT BICYCLE PATH SURFACE OR MATCHING MATERIAL TO THE ADJACENT SURFACE) UP TO THE PEDESTRIAN SIGNAL POST OR THE PEDESTRIAN PUSH BUTTON POST.
3. THE FACE OF THE PEDESTRIAN PUSHBUTTON SHALL BE PARALLEL TO THE CROSSWALK TO BE USED.
4. THE LOCATIONS AND INSTALLATION OF PEDESTRIAN SIGNAL HEADS AND PEDESTRIAN PUSHBUTTONS SHALL MEET THE REQUIREMENTS OF THE MUTCD AND INFORMATION FOUND IN THE "AMERICANS WITH DISABILITIES ACT ACCESSIBILITY GUIDELINES FOR BUILDINGS AND FACILITIES."

RECOMMENDED PUSHBUTTON LOCATIONS

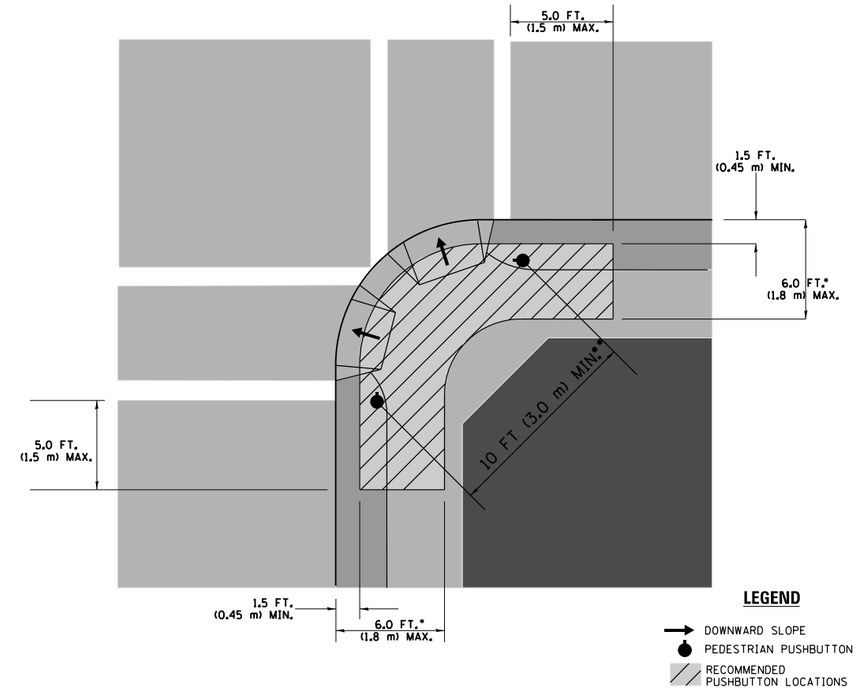

- * WHERE THERE ARE CONSTRAINTS THAT MAKE IT IMPRACTICAL TO PLACE THE PEDESTRIAN PUSHBUTTON BETWEEN 1.5 FT (0.45 m) AND 6 FT (1.8 m) FROM THE EDGE OF THE CURB, SHOULDER, OR PAVEMENT, IT SHOULD NOT BE FURTHER THAN 10 FT (3 m) FROM THE EDGE OF CURB, SHOULDER, OR PAVEMENT.
- ** WHERE THERE ARE CONSTRAINTS ON A PARTICULAR CORNER THAT MAKE IT IMPRACTICAL TO PROVIDE THE 10 FT (3 m) SEPERATION BETWEEN THE TWO PEDESTRIAN PUSHBUTTONS, THE PUSHBUTTONS MAY BE PLACED CLOSER TOGETHER OR ON THE SAME POLE.

NOTES:

1. PEDESTRIAN SIGNAL HEADS SHALL BE MOUNTED WITH THE BOTTOM OF THE SIGNAL HOUSING INCLUDING BRACKETS NOT LESS THAN 8 FT (2.4 m) OR MORE THAN 10 FT (3 m) ABOVE SIDEWALK LEVEL, AND SHALL BE POSITIONED AND ADJUSTED TO PROVIDE MAXIMUM VISIBILITY AT THE BEGINNING OF THE CONTROLLED CROSSWALK.
2. THE BOTTOM OF THE SIGNAL HOUSING (INCLUDING BRACKETS) OF A VEHICULAR SIGNAL FACE THAT IS NOT LOCATED OVER A HIGHWAY SHALL BE AT LEAST 8 FT (2.4 m) BUT NOT MORE THAN 19 FT (5.8 m) ABOVE THE SIDEWALK OR, IF THERE IS NO SIDEWALK, ABOVE THE PAVEMENT GRADE AT THE CENTER OF THE ROADWAY.
3. THE BOTTOM OF THE SIGNAL HOUSING AND ANY RELATED ATTACHMENTS TO A SIGNAL FACE LOCATED OVER ANY PORTION OF A HIGHWAY SHALL BE ACCORDING TO CURRENT STATE STANDARDS 877001, 877002, 877006, 877011 AND 877012 WITH A MINIMUM OF 16 FT (5.0 m) AND A MAXIMUM OF 18 FT. (5.5 m) FROM THE HIGHEST POINT OF PAVEMENT.
4. THE BOTTOM OF THE TEMPORARY SPAN WIRE MOUNTED SIGNAL HOUSING AND ANY RELATED ATTACHMENTS TO A SIGNAL FACE LOCATED OVER ANY PORTION OF A HIGHWAY SHALL BE ACCORDING TO CURRENT STATE STANDARD 880001 WITH A MINIMUM OF 17 FT (5.18 m) FROM THE HIGHEST POINT OF PAVEMENT.
5. THE TOP OF THE SIGNAL HOUSING OF A SIGNAL FACE LOCATED OVER ANY PORTION OF A HIGHWAY SHALL NOT BE MORE THAN 25.6 FT (7.8 m) ABOVE THE PAVEMENT.

TRAFFIC SIGNAL EQUIPMENT OFFSET

TRAFFIC SIGNAL EQUIPMENT	COMBINATION CONCRETE CURB AND GUTTER (MINIMUM DISTANCE FROM BACK OF CURB TO CENTERLINE OF FOUNDATION)	SHOULDER/NON-CURBED AREA (MINIMUM DISTANCE FROM EDGE OF PAVEMENT TO CENTERLINE OF FOUNDATION)
TRAFFIC SIGNAL MAST ARM POLE	6 FT (1.8m)	SHOULDER WIDTH + 2 FT (0.6m), MINIMUM 10 FT (3.0m)
TRAFFIC SIGNAL POST	4 FT (1.2m)	SHOULDER WIDTH + 2 FT (0.6m), MINIMUM 10 FT (3.0m)
PEDESTRIAN SIGNAL POST	4 FT (1.2m)	SHOULDER WIDTH + 2 FT (0.6m), MINIMUM 10 FT (3.0m)
PEDESTRIAN PUSHBUTTON POST	4 FT (1.2m)	SHOULDER WIDTH + 2 FT (0.6m), MINIMUM 10 FT (3.0m)
TEMPORARY WOOD POLE	6 FT (1.8m)	SHOULDER WIDTH + 2 FT (0.6m), MINIMUM 10 FT (3.0m)
CONTROLLER CABINET	6 FT (1.8m) MINIMUM DISTANCE SEE NOTE 2	SHOULDER WIDTH + 6 FT (1.8m), MINIMUM 16 FT (4.9m) SEE NOTE 3.
SERVICE INSTALLATION, GROUND MOUNT	6 FT (1.8m) MINIMUM DISTANCE SEE NOTE 2	SHOULDER WIDTH + 6 FT (1.8m), MINIMUM 16 FT (4.9m) SEE NOTE 3.

NOTES:

1. CONTACT THE "AREA TRAFFIC SIGNAL MAINTENANCE AND OPERATIONS ENGINEER" FOR ASSISTANCE IN LOCATING THE TRAFFIC SIGNAL EQUIPMENT WHEN THERE ARE CONFLICTS WITH DITCHES OR THE MINIMUM OFFSET DISTANCES CANNOT BE MET.
2. MINIMUM DISTANCE FROM THE BACK OF CURB TO THE ROADWAY SIDE OF THE FOUNDATION.
3. MINIMUM DISTANCE FROM THE EDGE OF PAVEMENT TOTHE ROADWAY SIDE OF THE FOUNDATION.
4. ANY CHANGES TO THE OFFSETS OF THE FOUNDATIONS, FROM THE MINIMUM DISTANCES LISTED IN THE "TRAFFIC SIGNAL EQUIPMENT OFFSET" CHART AND THE TRAFFIC SIGNAL INSTALLATION PLAN, COULD EFFECT THE PLACEMENT OF THE SIGNAL HEADS, PEDESTRIAN SIGNAL HEADS AND THE PEDESTRIAN PUSHBUTTONS. THE SIGNAL HEAD PLACEMENT ON THE MAST ARMS SHALL REMAIN AS PER THE TRAFFIC SIGNAL INSTALLATION PLAN AND THE "TRAFFIC SIGNAL MAST ARM AND SIGNAL POST" DETAIL ABOVE. THE PROPOSED MAST ARM LENGTHS MAY NEED TO BE REVISED TO MEET THE ABOVE REQUIREMENTS. THE PEDESTRIAN SIGNAL HEADS AND PEDESTRIAN PUSHBUTTONS MUST MEET THE REQUIREMENTS UNDER THE DETAILS ON THIS SHEET.

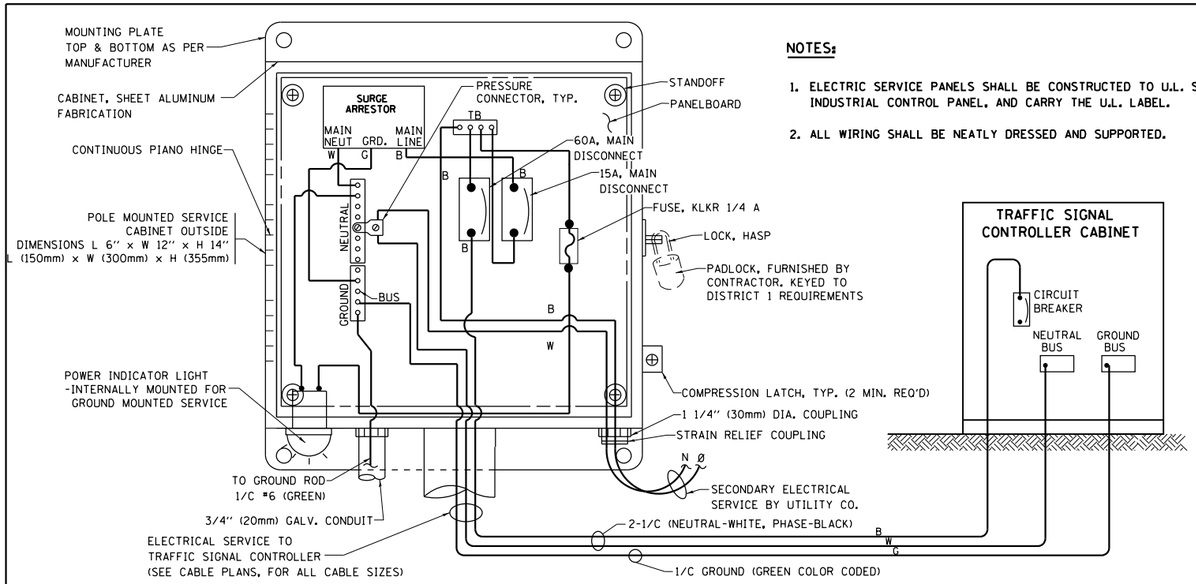

NOTES:

1. ELECTRIC SERVICE PANELS SHALL BE CONSTRUCTED TO U.L. STD 508, INDUSTRIAL CONTROL PANEL, AND CARRY THE U.L. LABEL.
2. ALL WIRING SHALL BE NEATLY DRESSED AND SUPPORTED.

ELECTRICAL SERVICE – PANEL DIAGRAM (TYPICAL FOR POLE AND GROUND MOUNTED SERVICE)
SERVICE INSTALLATION POLE MOUNT (SHOWN)

(NOT TO SCALE)

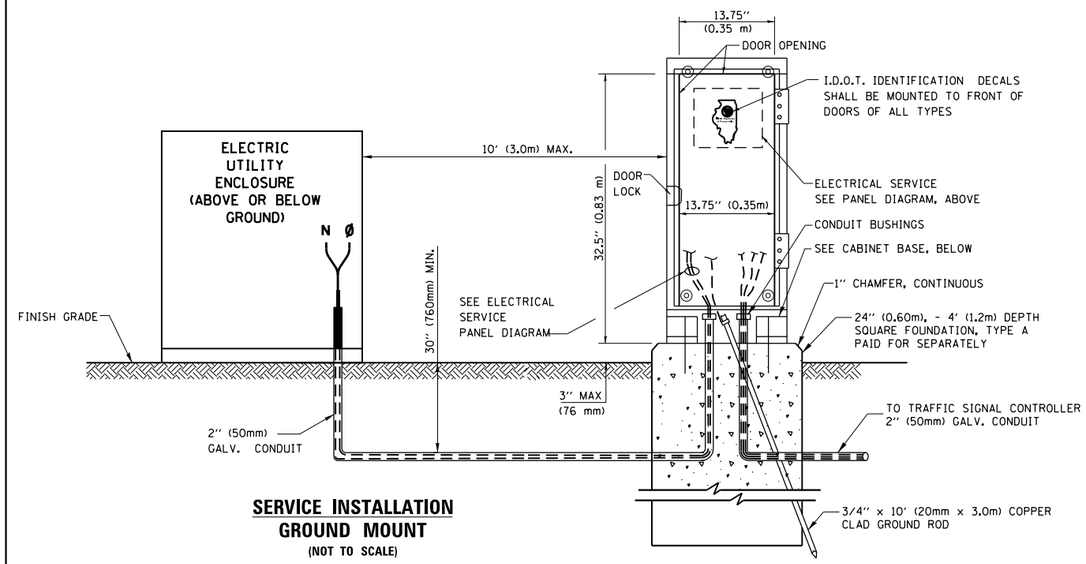

SERVICE INSTALLATION
GROUND MOUNT

(NOT TO SCALE)

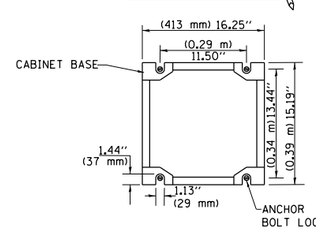

CABINET – BASE BOLT PATTERN

(NOT TO SCALE)

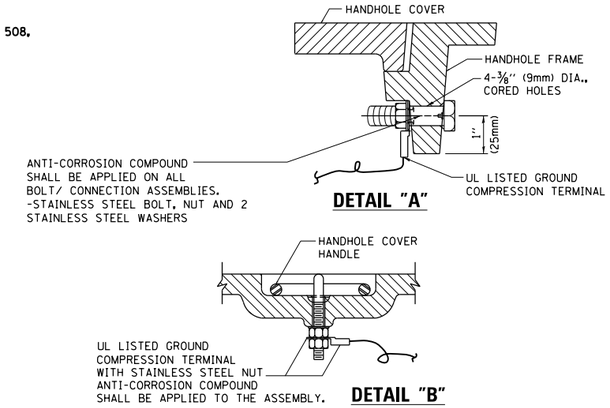

DETAIL "A"

DETAIL "B"

NOTES:
GROUNDING SYSTEM

1. THE GROUNDING SYSTEM SHALL CONSIST OF AN INSULATED CONDUCTOR TYPE XLP, NO. 6 A.W.G., STRANDED COPPER TO BE INSTALLED IN RACEWAYS. THE GROUNDING CABLE SHALL BE INSTALLED IN A CONTINUOUS MANNER AS SHOWN ON THE CABLE PLAN PROVIDED. ALL GROUNDING CONDUCTORS SHALL BE BONDED TO METAL ENCLOSURE (HANDHOLE, POST, MAST ARM, CONTROLLER, ETC.). GROUND ROD SHALL BE 3/4" DIA. x 10'-0" (20mm x 3.0m) LONG, COPPER CLAD. ONE GROUND ROD SHALL BE INSTALLED AT ALL POST FOUNDATIONS, POLE FOUNDATIONS, CONTROLLER CABINET FOUNDATION AND ELECTRICAL SERVICE INSTALLATION AS INDICATED ON THE CABLE PLAN. IF THERE ARE ANY SPECIAL CONDITIONS SUCH AS SUB-SURFACE CONDITIONS OR INSTALLATION PROBLEMS, THE RESIDENT ENGINEER SHALL BE NOTIFIED OR CONTACT THE BUREAU OF TRAFFIC, ILLINOIS DEPARTMENT OF TRANSPORTATION DISTRICT ONE AT (847) 705-4139.
2. THE NEUTRAL CONDUCTOR AND THE GROUND CONDUCTOR SHALL BE CONNECTED IN THE SERVICE INSTALLATION. AT NO OTHER POINT IN THE TRAFFIC SIGNAL SYSTEM SHALL THE NEUTRAL AND GROUND CONDUCTORS BE CONNECTED.
3. ALL EQUIPMENT GROUNDING CONDUCTORS SHALL TERMINATE AT THE GROUND BUS IN THE CONTROLLER CABINET.
4. THE CONTRACTOR SHALL PROVIDE A GROUND CABLE WITH CONNECTORS BETWEEN THE HANDHOLE COVER AND HANDHOLE FRAME.

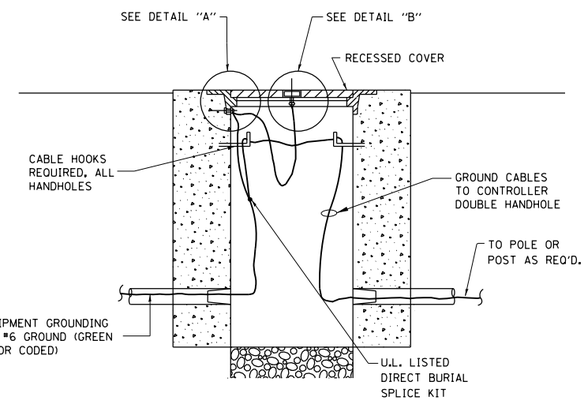

HANDHOLE COVER & FRAME – GROUNDING DETAIL

(NOT TO SCALE)

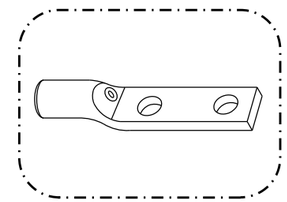

HEAVY-DUTY COMPRESSION TERMINAL
(BURNDY TYPE YGHA OR APPROVED EQUAL)

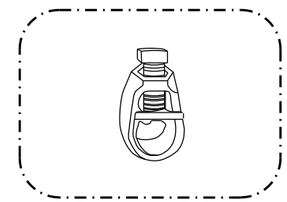

3/4" (20mm) HEAVY-DUTY GROUND ROD CLAMP
(BURNDY TYPE GRC OR APPROVED EQUAL)

NOTES:

- ALL CLAMPS SHALL BE BRONZE OR COPPER, UL APPROVED.
- GROUND CABLE SHALL BE LOOPED OVER HOOKS IN THE HANDHOLES
  6.5' (2.0m) SLACK SHALL BE PROVIDED IN SINGLE HANDHOLES
  13' (4.0m) OF SLACK SHALL BE PROVIDED IN DOUBLE HANDHOLES.
  5' (1.4m) OF SLACK SHALL BE PROVIDED BETWEEN FRAME AND COVER.

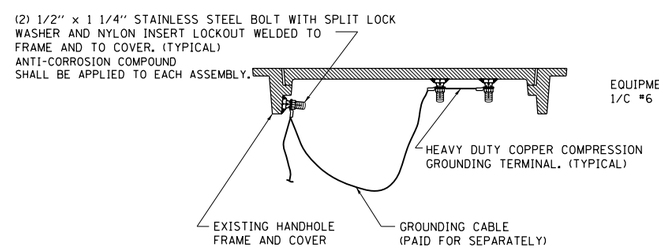

EXISTING HANDHOLE COVER & FRAME – GROUNDING DETAIL

(NOT TO SCALE)

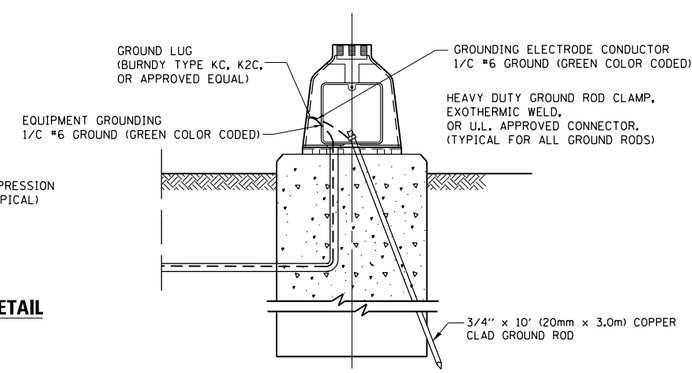

MAST ARM POLE / POST–GROUNDING DETAIL

(NOT TO SCALE)

FILE NAME = pw:\\planroom.dot.illinois.govPWIDOT\Documents\IDOT Offices\District 1\Projects\P105014\DraftingFile\Design\DistStd.dgn	USER NAME = kalorm	DESIGNED -	REVISED -
		DRAWN -	REVISED -
	PLOT SCALE = 100.0000 ' / in.	CHECKED -	REVISED -
Default	PLOT DATE = 3/21/2019	DATE -	REVISED -

STATE OF ILLINOIS
DEPARTMENT OF TRANSPORTATION

DISTRICT ONE
STANDARD TRAFFIC SIGNAL DESIGN DETAILS

SCALE: NONE | SHEET 4 OF 7 SHEETS | STA. TO STA.

F.A.P RTE.	SECTION	COUNTY	TOTAL SHEETS	SHEET NO.
338	110TS-N	DUPAGE	133	71
	TS-05	CONTRACT NO. 62F19		
		ILLINOIS FED. AID PROJECT		

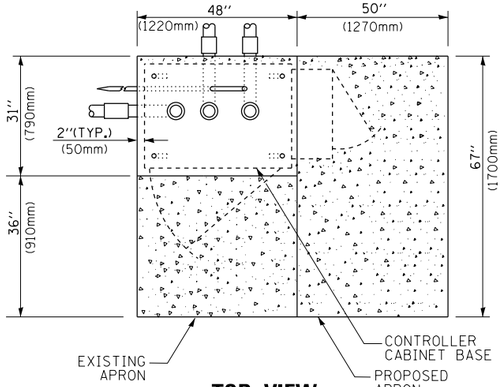

TOP VIEW

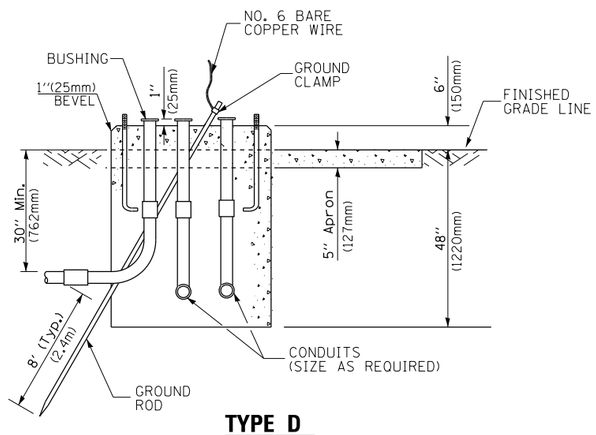

TYPE D
FOR GROUND MOUNTED
CONTROLLER CABINET
AND UPS BATTERY CABINET

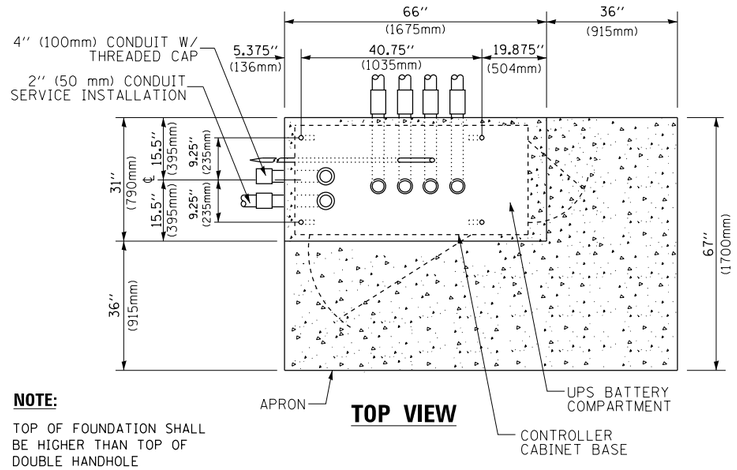

NOTE:

TOP OF FOUNDATION SHALL BE HIGHER THAN TOP OF DOUBLE HANDHOLE

TOP VIEW

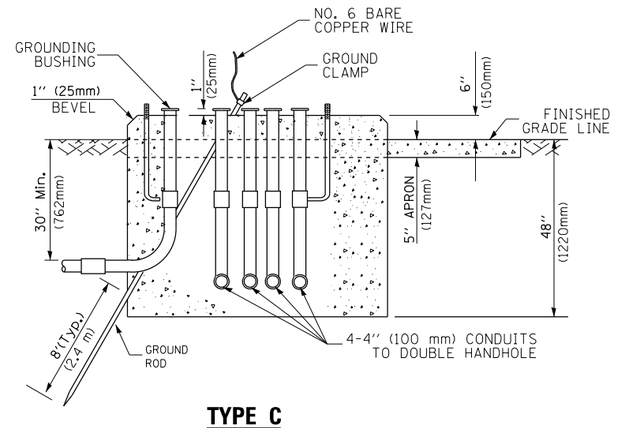

TYPE C
FOR GROUND MOUNTED
SUPER P (TYPE IV) AND SUPER R (TYPE V)
CONTROLLER CABINETS

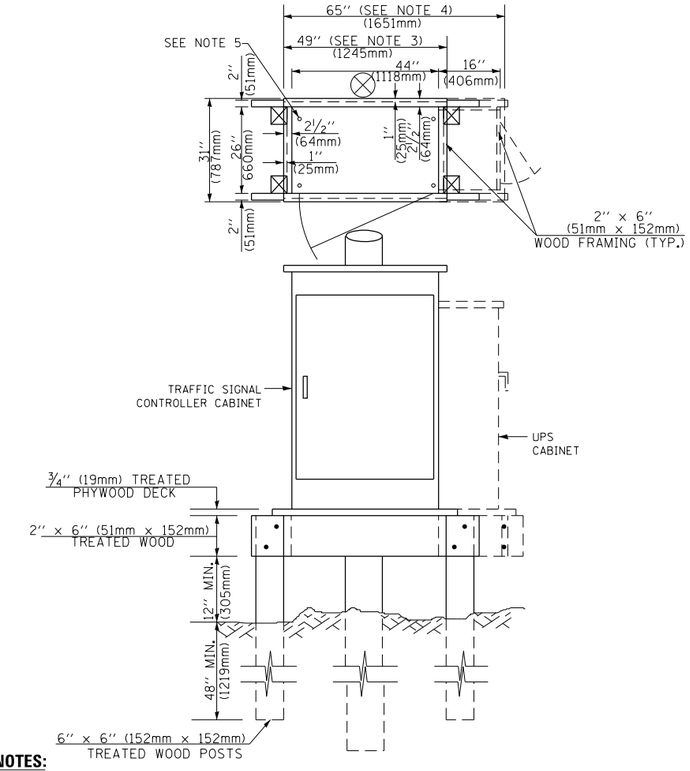

NOTES:

1. BASED ON CONTROLLER CABINET TYPE IV WITH BASE DIMENSIONS OF 26" x 44" (660mm x 1118mm). ADJUST PLATFORM SIZE TO FIT CABINET BASE DIMENSIONS BEING SUPPLIED
2. BASED ON UNINTERRUPTIBLE POWER SUPPLY CABINET WITH BASE DIMENSIONS OF 16" x 25" (406mm x 635mm). ADJUST PLATFORM SIZE TO FIT CABINET BASE DIMENSIONS BEING SUPPLIED.
3. PLATFORM SIZE FOR CONTROLLER CABINET TYPE IV.
4. PLATFORM SIZE FOR CONTROLLER CABINET TYPE IV AND UNINTERRUPTIBLE POWER SUPPLY CABINET.
5. DRILLED HOLES THROUGH THE PLATFORM BASE TO MATCH THE CONTROLLER CABINET BOLT TEMPLATE. FASTEN THE CONTROLLER CABINET TO THE PLATFORM WITH CARRIAGE BOLTS, WASHERS AND NUTS.
6. FASTEN ALL SUPPORT WOOD FRAMING TO THE WOOD POSTS WITH 2 LAG SCREWS FOR EACH CONNECTION..

TEMPORARY SIGNAL CONTROLLER
WOOD SUPPORT PLATFORM

CABLE SLACK LENGTH	FEET	METER
HANDHOLE	6.5	2.0
DOUBLE HANDHOLE	13.0	4.0
SIGNAL POST	2.0	0.6
MAST ARM	2.0	0.6
CONTROLLER CABINET	1.5	0.5
FIBER OPTIC AT CABINET	13.0	4.0
ELECTRIC SERVICE AT (CABINET OR SERVICE LOCATION)	1.5	0.5
GROUND CABLE (SIGNAL POST, MAST ARM, CABINET)	1.5	0.5
GROUND CABLE (BETWEEN FRAME AND COVER)	5.0	1.6

CABLE SLACK

VERTICAL CABLE LENGTH	FEET	METER
MAST ARM POLE (MAST ARM MOUNTED SIGNAL HEAD) (L = MAST ARM LENGTH - DISTANCE TO SIGNAL HEAD FROM END OF ARM)	20.0+L	6.0+L
BRACKET MOUNTED (MAST ARM POLE OR SIGNAL POLE)	13.0	4.0
PEDESTRIAN PUSH BUTTON	6.0	2.0
SERVICE INSTALLATION POLE MOUNT TO SERVICE DROP	13.5	4.1
SERVICE INSTALLATION POLE MOUNT TO GROUND	13.5	4.1
SERVICE INSTALLATION GROUND MOUNT	6.0	2.0
FOUNDATION (SIGNAL POST, MAST ARM POLE, CONTROLLER CABINET, SERVICE-GROUND MOUNT)	3.0	1.0

VERTICAL CABLE LENGTH

FOUNDATION	DEPTH
TYPE A - Signal Post	4'-0" (1.2m)
TYPE C - CONTROLLER W/ UPS	4'-0" (1.2m)
TYPE D - CONTROLLER	4'-0" (1.2m)
SERVICE INSTALLATION, GROUND MOUNT, TYPE A - SQUARE	4'-0" (1.2m)

DEPTH OF FOUNDATION

Mast Arm Length	① Foundation Depth	Foundation Diameter	Spiral Diameter	Quantity of Rebars	Size of Rebars
Less than 30' (9.1 m)	10'-0" (3.0 m)	30" (750mm)	24" (600mm)	8	6(19)
Greater than or equal to 30' (9.1 m) and less than 40' (12.2 m)	13'-6" (4.1 m)	30" (750mm)	24" (600mm)	8	6(19)
	11'-0" (3.4 m)	36" (900mm)	30" (750mm)	12	7(22)
Greater than or equal to 40' (12.2 m) and less than 50' (15.2 m)	13'-0" (4.0 m)	36" (900mm)	30" (750mm)	12	7(22)
Greater than or equal to 50' (15.2 m) and up to 55' (16.8 m)	15'-0" (4.6 m)	36" (900mm)	30" (750mm)	12	7(22)
Greater than or equal to 56' (16.8 m) and less than 65' (19.8 m)	21'-0" (6.4 m)	42" (1060mm)	36" (900mm)	16	8(25)
Greater than or equal to 65' (19.8 m) and up to 75' (22.9 m)	25'-0" (7.6 m)	42" (1060mm)	36" (900mm)	16	8(25)

NOTES:

1. These foundation depths are for sites which have cohesive soils (clayey silt, sandy clay, etc.) along the length of the shaft, with an average Unconfined Compressive Strength (Qu) > 1.0 tsf (100 kpa). This strength shall be verified by boring data prior to construction or with testing by the Engineer during foundation drilling. The Bureau of Bridges & structures should be contacted for a revised design if other conditions are encountered.
2. Combination mast arm assemblies under 55 feet (16.8 m) shall use 36" (900 mm) diameter foundations.
3. Combination mast arm assemblies under 56 feet (16.8 m) through 75 feet (22.9 m) shall use 42" (1060 mm) diameter foundations
4. For mast arm assemblies with dual arms refer to state standard 878001..

DEPTH OF MAST ARM FOUNDATIONS, TYPE E

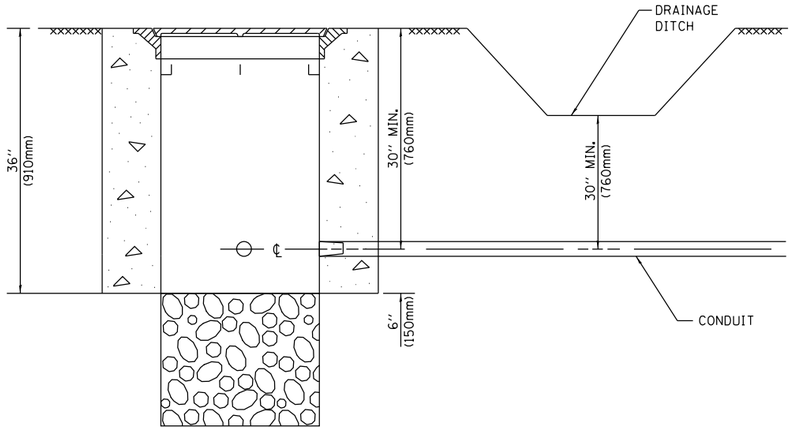

NOTES:

1. CONDUIT DEPTH SHALL BE A MINIMUM OF 30" (760mm) BELOW THE BOTTOM OF THE DRAINAGE DITCH OR ANY SLOPING GROUND
2. THE MINIMUM CONDUIT DEPTH APPLIES TO ALL CONDUIT PLACED UNDER ROADWAY PAVEMENT, MULTI-USE PATHS, SIDEWALKS AND SOIL SURFACES.
3. THE MINIMUM CONDUIT DEPTH APPLIES TO ALL HANDHOLES, HEAVY DUTY HANDHOLES AND DOUBLE HANDHOLES.

HANDHOLE WITH MINIMUM CONDUIT DEPTH

(NOT TO SCALE)

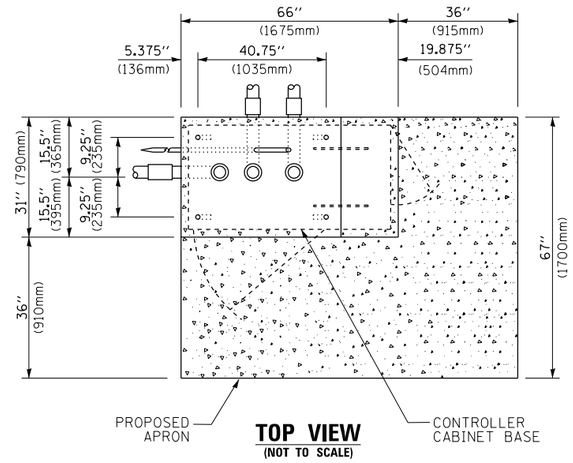

TOP VIEW

(NOT TO SCALE)

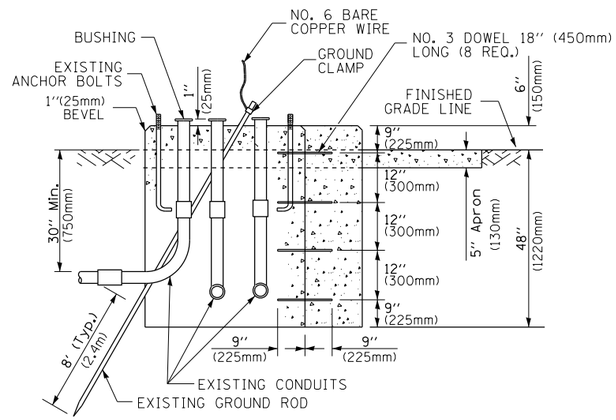

MODIFY EXISTING TYPE "D" FOUNDATION TO TYPE "C" FOUNDATION

(NOT TO SCALE)

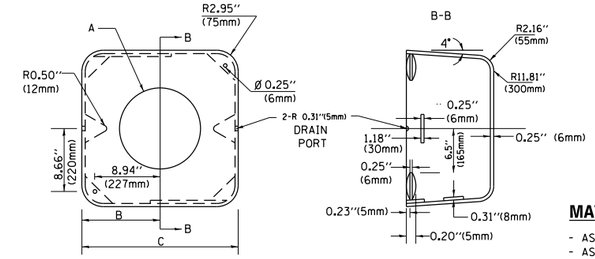

MATERIAL:

- ASTM A36 STEEL
- ASTM A-123 HOT DIPPED GALVANIZED

A	B	C	HEIGHT	WEIGHT
VARIES	9.5"(241mm)	19"(483mm)	7" (178mm) - 12" (300mm)	53 lbs (24kg)
VARIES	10.75"(273mm)	21.5"(546mm)	7" (178mm) - 12" (300mm)	68 lbs (31 kg)
VARIES	13.0"(330mm)	26"(660mm)	7" (178mm) - 12" (300mm)	81 lbs (37 kg)
VARIES	18.5"(470mm)	37"(940mm)	7" (178mm) - 12" (300mm)	126 lbs (57 kg)

SHROUD

NOTES:

1. DIMENSION "A" IS EQUAL TO THE DIAMETER OF THE MAST ARM POLE AT THE TOP OF THE SHROUD. THE SHROUD SHALL BE TIGHT TO THE MAST ARM POLE.
2. THE SUPPLIER SHALL VERIFIED THE ABOVE DIMENSIONS BASED ON MAST ARM REQUIREMENTS.
3. THE HEIGHT OF THE SHROUD SHALL COVER THE ANCHOR BOLTS, NUTS AND MAST ARM POLE BASE.

NOTE:

SUPPORT EXISTING CABINET AND CONTROL EQUIPMENT ABOVE FOUNDATION TO KEEP TRAFFIC SIGNAL FUNCTIONING WHILE FOUNDATION MODIFICATION WORK IS PROCEEDING.

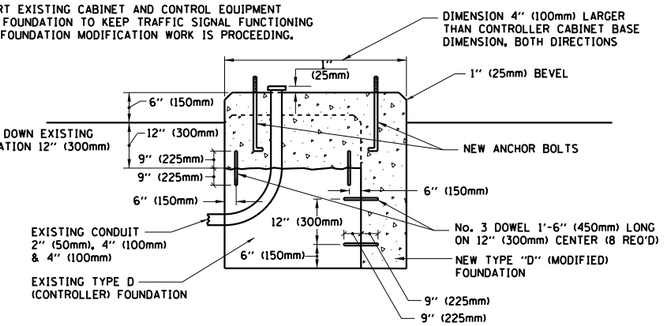

MODIFY EXISTING TYPE "D" FOUNDATION

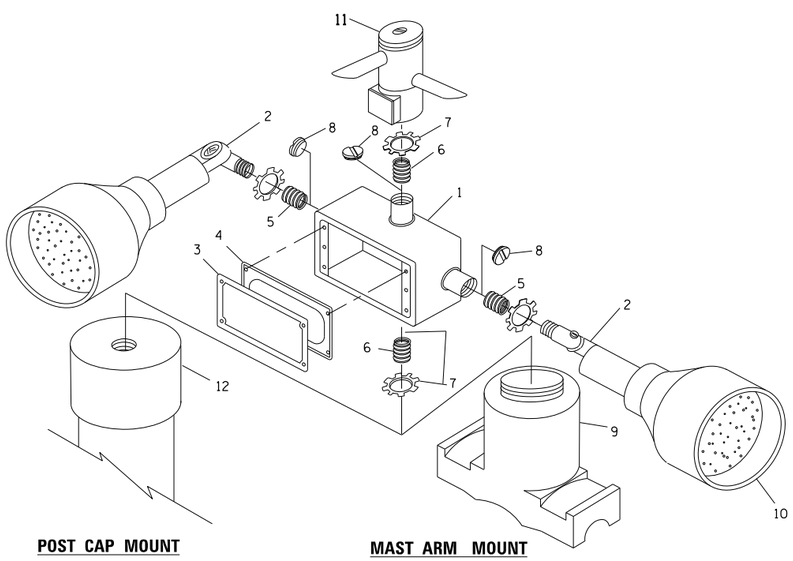

POST CAP MOUNT

MAST ARM MOUNT

EMERGENCY VEHICLE DETECTOR WITH CONFIRMATION BEACON MOUNTING DETAIL

ITEM NO.	IDENTIFICATION
1	OUTLET BOX- GALV. 21 CU.IN. (0.000344 CU-M)
2	LAMP HOLDER AND COVER
3	OUTLET BOX COVER
4	RUBBER COVER GASKET
5	REDUCING BUSHING
6	¾"(19 mm) CLOSE NIPPLE
7	¾"(19 mm) LOCKNUT
8	¾"(19 mm) HOLE PLUG
9	SADDLE BRACKET - GALV.
10	6 WATT PAR 38 LED FLOOD LAMP
11	DETECTOR UNIT
12	POST CAP [18 FT. (5.4 m) POST MIN.]

NOTES:

1. ALL ELECTRICAL ITEMS, EXCEPT ITEMS #2 AND #11 SHALL BE ALUMINUM OR GALVANIZED
2. ITEM #1- OZ/GEDNEY FSX-1-50 OR EQUIVALENT
   ITEM #2- MULBERRY CON-O-SHADE LAMP SHIELD OR EQUIVALENT
   ITEM #9- "BAND-IT" SADDLE BRACKET OR EQUIVALENT
3. WHEN POST MOUNTING IS SPECIFIED, ITEM #9 SHALL NOT BE REQUIRED. THE DETECTION UNIT SHALL BE MOUNTED DIRECTLY ON TOP OF THE CAP BY DRILLING AND TAPPING A 3/4 "(19 mm) HOLE WITH PIPE THREADS. THE POST CAP SHALL EITHER BE SCREWED TO THE TOP OF THE POST OR A MINIMUM OF 3 TIGHTENING SCREWS SHALL BE REQUIRED ON EACH CAP.

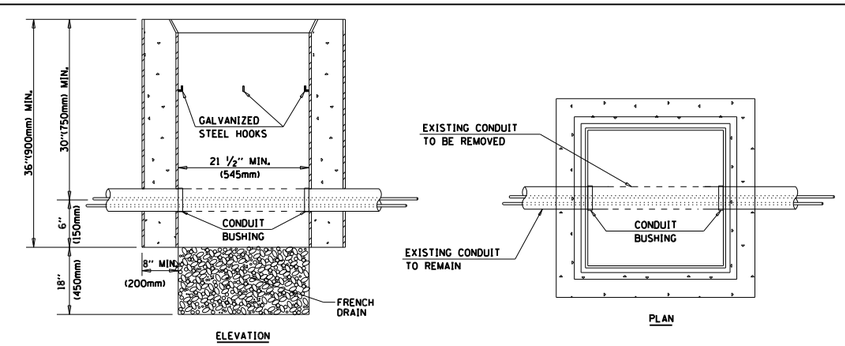

NOTES:

1. HANDHOLE CONSTRUCTED PER STATE STANDARD 814001.
2. REMOVAL OF THE EXISTING CONDUIT FROM THE HANDHOLE AND THE INSTALLATION OF THE CONDUIT BUSHINGS SHALL BE INCLUDED WITH THE COST OF THE HANDHOLE.

HANDHOLE TO INTERCEPT EXISTING CONDUIT

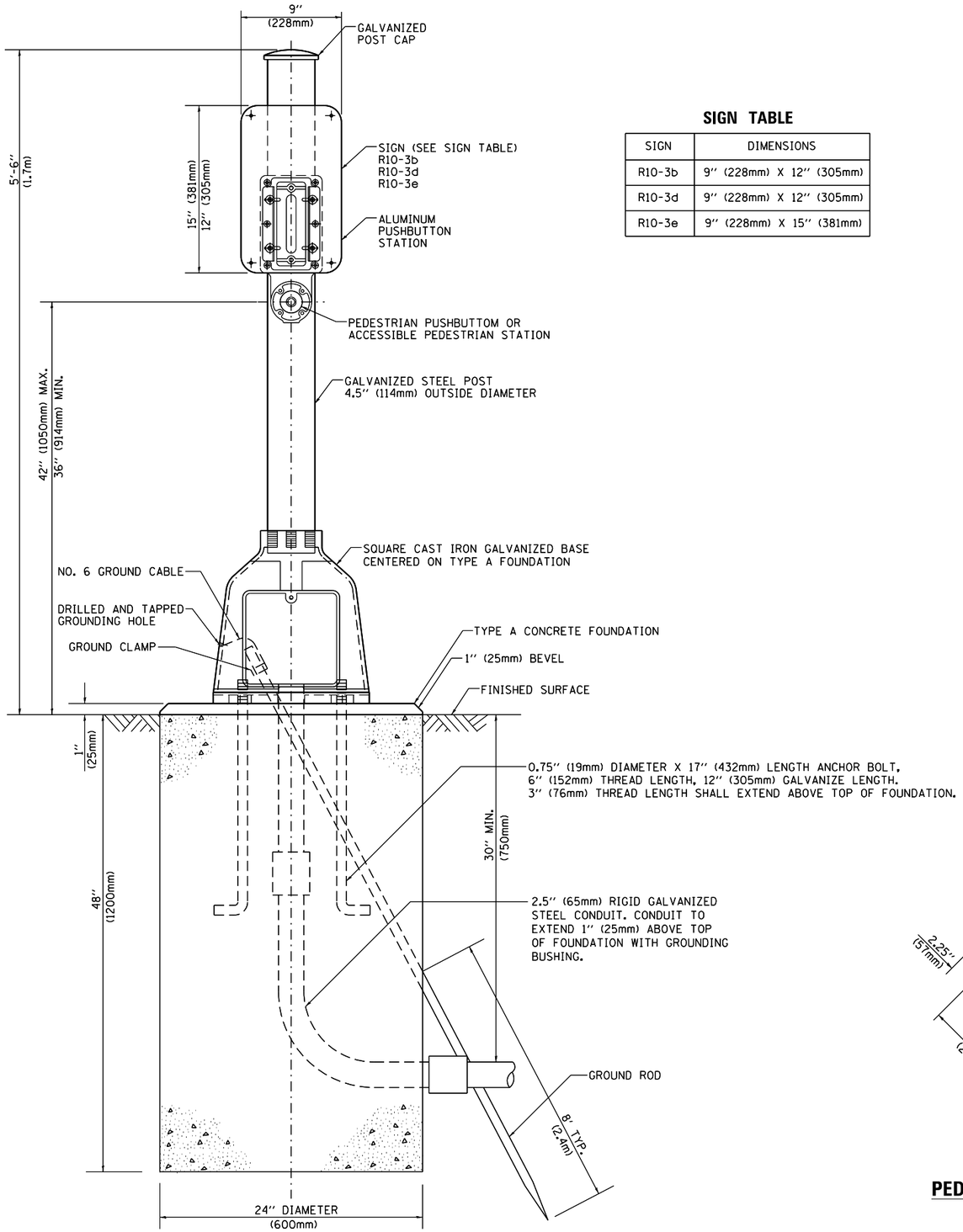

SIGN TABLE

SIGN	DIMENSIONS
R10-3b	9" (228mm) X 12" (305mm)
R10-3d	9" (228mm) X 12" (305mm)
R10-3e	9" (228mm) X 15" (381mm)

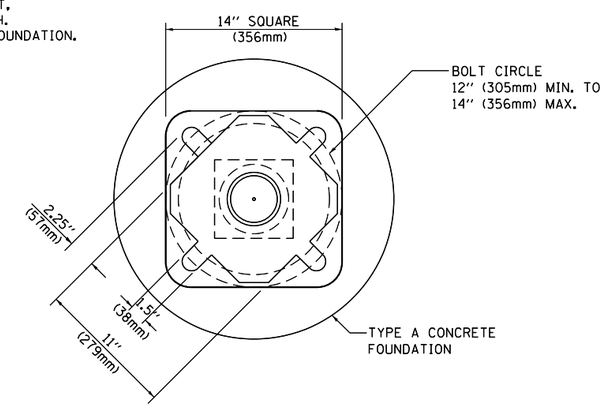

BOLT PATTERN

PEDESTRIAN PUSH BUTTON POST, TYPE A

FILE NAME = pw:\\planroom.dot.illinois.gov:PWIDOT\Documents\IDOT Offices\District 1\Projects\P105014\Drawings\Design\DistStd.dgn	USER NAME = kalorm	DESIGNED -	REVISED -
			REVISED -
	PLOT SCALE = 100.0000 ' / in.	CHECKED -	REVISED -
Default	PLOT DATE = 3/21/2019	DATE -	REVISED -

STATE OF ILLINOIS
DEPARTMENT OF TRANSPORTATION

DISTRICT ONE
STANDARD TRAFFIC SIGNAL DESIGN DETAILS

SCALE: NONE | SHEET 7 OF 7 SHEETS | STA. TO STA.

F.A.P RTE.	SECTION	COUNTY	TOTAL SHEETS	SHEET NO.
338	110TS-N	DUPAGE	133	74
	TS-05	CONTRACT NO. 62F19		
	ILLINOIS FED. AID PROJECT			

SIGN PANEL – TYPE 1 OR TYPE 2

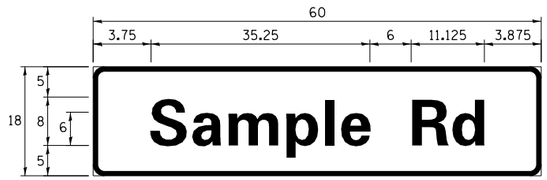

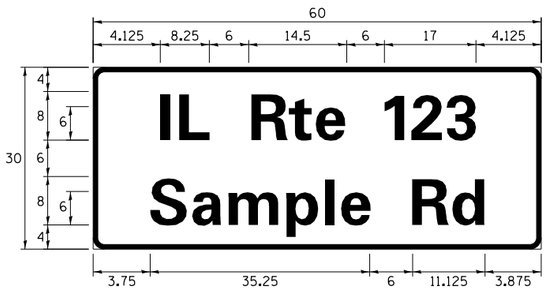

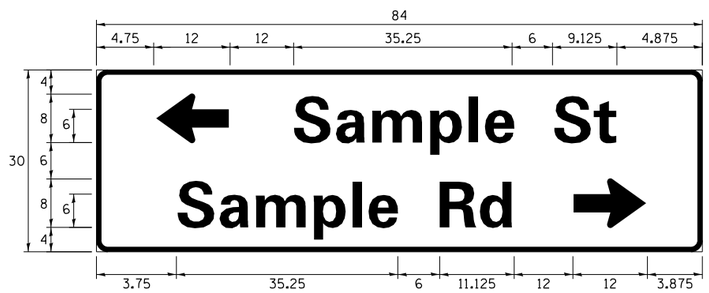

DESIGN SERIES	AREA (SQ FT)	SIGN PANEL TYPE	SHEETING TYPE	QTY. REQUIRED
D OR C	-	1 OR 2	ZZ	-

ALL DIMENSIONS ARE IN INCHES EXCEPT NOTED OTHERWISE

COMMON STREET NAME ABBREVIATIONS AND WIDTHS

NAME	ABBREVATION	WIDTH (INCH)	
		SERIES "C"	SERIES "D"
AVENUE	Ave	15.000	18.250
BOULEVARD	Blvd	17.125	20.000
CIRCLE	Cir	11.125	13.000
COURT	Ct	8.250	9.625
DRIVE	Dr	8.625	10.125
HIGHWAY	Hwy	18.375	22.000
ILLINOIS	IL	7.000	8.250
LANE	Ln	9.125	10.750
PARKWAY	Pkwy	23.375	27.375
PLACE	Pl	7.125	7.750
ROAD	Rd	9.625	11.125
ROUTE	Rte	12.625	14.500
STREET	St	8.000	9.125
TERRACE	Ter	12.625	14.625
TRAIL	Tr	7.750	9.125
UNITED STATES	US	10.375	12.250

GENERAL NOTES

1. WHERE MAST ARM MOUNTED STREET NAME SIGNS ARE SPECIFIED, THE MAST ARM ASSEMBLY AND POLES SHALL BE DESIGNED TO SUPPORT THE LOADINGS CALLED FOR ON STANDARDS 877001, 877002, 877006, 877011 AND 877012, AS APPLICABLE, PLUS TWO (2) SIGN PANELS 2'-6" x 8'-0" MOUNTED AS SHOWN. THE DESIGN SHALL BE IN ACCORDANCE WITH THE REQUIREMENTS OF THE CURRENT "STANDARD SPECIFICATIONS FOR STRUCTURAL SUPPORTS FOR HIGHWAY SIGNS, LUMINAIRES, AND TRAFFIC SIGNALS" AS PUBLISHED BY THE AMERICAN ASSOCIATION OF STATE HIGHWAY AND TRANSPORTATION OFFICIALS FOR 80 M.P.H. WIND VELOCITY.
2. ALL SIGNS SHALL CONSIST OF A WHITE LEGEND AND BORDER (TYPE ZZ SHEETING) ON A GREEN BACKGROUND (TYPE ZZ SHEETING)
3. THE SIGN LENGTH SHALL BE IN 6-INCH INCREMENTS, BUT THE OVERALL LENGTH SHALL NOT EXCEED 8'-0". ALL BORDERS SHALL BE ¾" WIDE. CORNER RADIUS SHALL BE 1-7/8". THE SPACING BETWEEN THE WORDS SHOULD BE 6", IF POSSIBLE, BUT MAY BE REDUCED TO 5" WHEN SPACING IS CRITICAL. A MINIMUM OF 2-1/2" SHALL BE INCLUDED BETWEEN THE WORD AND THE RIGHT AND LEFT EDGES OF THE SIGN.
4. A PREFERRED METHOD FOR THE SIGN DESIGN IS TO USE SERIES "D" LETTER ON A ONE-LINE SIGN 18" IN HEIGHT AND A MAXIMUM OF 8'-0" IN WIDTH. IF SERIES "D" DOES NOT FIT ON A 8'-0" SIGN, THEN SERIES "C" SHOULD BE TRIED. IF SERIES "C" DOES NOT FIT ON A 8'-0" SIGN, A 30" HIGH TWO-LINE SIGN CAN BE USED. THE CROSSROAD DESIGNATION AS TO STREET, AVENUE, ETC. SHOULD BE SPELLED OUT ON THE SECOND LINE, IF THE ABBREVIATION CANNOT FIT ON THE FIRST LINE.
5. LED ILLUMINATED STREET NAME SIGNS CAN BE USED IN PLACE OF REGULAR SIGN PANELS BUT ANY SPECIAL WORDING AND SYMBOLOGY MUST BE APPROVED BY THE DEPARTMENT. GENERAL DESIGN REQUIREMENT AS LISTED ABOVE (COLOR, FONT, SIZE, ETC.) MUST BE FOLLOWED.
6. SIGNFIX ALUMINUM CHANNEL FRAMING SYSTEM SHALL BE USED FOR ALL SIGNS ATTACHED TO SIGNAL POLES AND POSTS.

LOCAL SUPPLIERS:	PARTS LISTING:	
- J.O. HERBERT COMPANY, INC MIDLOTHIAN, VA	SIGN CHANNEL	PART #HPN053 (MED. CHANNEL)
	SIGN SCREWS	1/4" x 14 x 1" H.W.H. #3 SELF TAPPING WITH NEOPRENE WASHER
- WESTERN REMAC, INC. WOODRIDGE, IL	BRACKETS	PART #HPN034 (UNIVERSAL) CHANNEL CLAMPS WITH STAINLESS STEEL STRAPPING

OTHER BRANDS OF MOUNTING HARDWARE ARE ACCEPTABLE, BASED UPON THE DEPARTMENT'S APPROVAL AND COMPATIBILITY WITH THE CHANNEL/BRACKET OF THE ABOVE PRODUCT.

MOUNTING LOCATION

ARM OR POLE MOUNTED

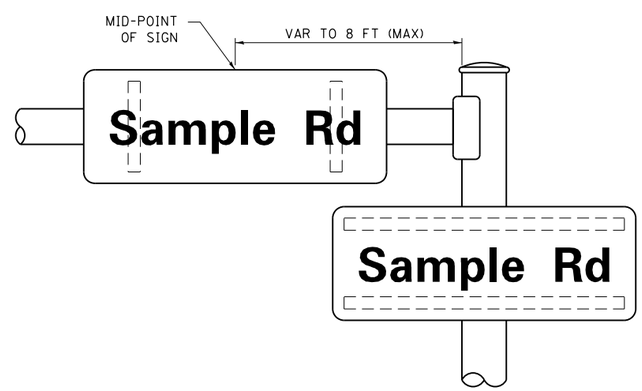

SUPPORTING CHANNELS

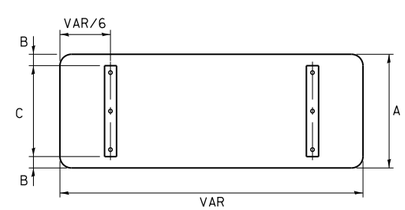

A	B	C
18"	2"	14"
30"	2"	24"

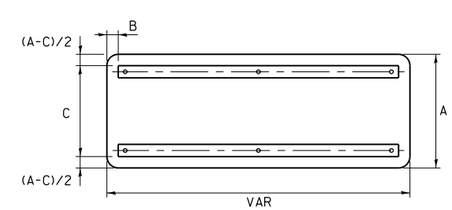

A	B	C
18"	2"	12"
30"	2"	22"

STANDARD ALPHABETS SPACING CHART

(8") UPPER CASE AND (6") LOWER CASE

FHWA SERIES "C"				FHWA SERIES "D"			
CHARACTER	LEFT SPACING (INCH)	WIDTH (INCH)	RIGHT SPACING (INCH)	CHARACTER	LEFT SPACING (INCH)	WIDTH (INCH)	RIGHT SPACING (INCH)
A	0.240	5.122	0.240	A	0.240	6.804	0.240
B	0.880	4.482	0.480	B	0.960	5.446	0.400
C	0.720	4.482	0.720	C	0.800	5.446	0.800
D	0.880	4.482	0.720	D	0.960	5.446	0.800
E	0.880	4.082	0.480	E	0.960	4.962	0.400
F	0.880	4.082	0.240	F	0.960	4.962	0.240
G	0.720	4.482	0.720	G	0.800	5.446	0.800
H	0.880	4.482	0.880	H	0.960	5.446	0.960
I	0.880	1.120	0.880	I	0.960	1.280	0.960
J	0.240	4.082	0.880	J	0.240	5.122	0.960
K	0.880	4.482	0.480	K	0.960	5.604	0.400
L	0.880	4.082	0.240	L	0.960	4.962	0.240
M	0.880	5.284	0.880	M	0.960	6.244	0.960
N	0.880	4.482	0.880	N	0.960	5.446	0.960
O	0.720	4.722	0.720	O	0.800	5.684	0.800
P	0.880	4.482	0.720	P	0.960	5.446	0.240
Q	0.720	4.722	0.720	Q	0.800	5.684	0.800
R	0.880	4.482	0.480	R	0.960	5.446	0.400
S	0.480	4.482	0.480	S	0.400	5.446	0.400
T	0.240	4.082	0.240	T	0.240	4.962	0.240
U	0.880	4.482	0.880	U	0.960	5.446	0.960
V	0.240	4.962	0.240	V	0.240	6.084	0.240
W	0.240	6.084	0.240	W	0.240	7.124	0.240
X	0.240	4.722	0.240	X	0.400	5.446	0.400
Y	0.240	5.122	0.240	Y	0.240	6.884	0.240
Z	0.480	4.482	0.480	Z	0.400	5.446	0.400
a	0.320	3.842	0.640	a	0.400	4.562	0.720
b	0.720	4.082	0.480	b	0.800	4.802	0.480
c	0.480	4.002	0.240	c	0.480	4.722	0.240
d	0.480	4.082	0.720	d	0.480	4.802	0.800
e	0.480	4.082	0.320	e	0.480	4.722	0.320
f	0.320	2.480	0.160	f	0.320	2.882	0.160
g	0.480	4.082	0.720	g	0.480	4.802	0.800
h	0.720	4.082	0.640	h	0.800	4.722	0.720
i	0.720	1.120	0.720	i	0.800	1.280	0.800
j	0.000	2.320	0.720	j	0.000	2.642	0.800
k	0.720	4.322	0.160	k	0.800	5.122	0.160
l	0.720	1.120	0.720	l	0.800	1.280	0.800
m	0.720	6.724	0.640	m	0.800	7.926	0.720
n	0.720	4.082	0.640	n	0.800	4.722	0.720
o	0.480	4.082	0.480	o	0.480	4.882	0.480
p	0.720	4.082	0.480	p	0.800	4.802	0.480
q	0.480	4.082	0.720	q	0.480	4.802	0.800
r	0.720	2.642	0.160	r	0.800	3.042	0.160
s	0.320	3.362	0.240	s	0.320	3.762	0.240
t	0.080	2.882	0.080	t	0.080	3.202	0.080
u	0.640	4.082	0.720	u	0.720	4.722	0.800
v	0.160	4.722	0.160	v	0.160	5.684	0.160
w	0.160	7.524	0.160	w	0.160	9.046	0.160
x	0.000	5.202	0.000	x	0.000	6.244	0.000
y	0.160	4.962	0.160	y	0.160	6.004	0.160
z	0.240	3.362	0.240	z	0.240	4.002	0.240
1	0.720	1.680	0.880	1	0.800	2.000	0.960
2	0.480	4.482	0.480	2	0.800	5.446	0.800
3	0.480	4.482	0.480	3	1.440	5.446	0.800
4	0.240	4.962	0.720	4	0.160	6.004	0.960
5	0.480	4.482	0.480	5	0.800	5.446	0.800
6	0.720	4.482	0.720	6	0.800	5.446	0.800
7	0.240	4.482	0.720	7	0.560	5.446	0.560
8	0.480	4.482	0.480	8	0.800	5.446	0.800
9	0.480	4.482	0.480	9	0.800	5.446	0.800
0	0.720	4.722	0.720	0	0.800	5.684	0.800
-	0.240	2.802	0.240	-	0.240	2.802	0.240

REMOVAL AND RELOCATION NOTES:

THE FOLLOWING EXISTING TRAFFIC SIGNAL EQUIPMENT SHALL BE REMOVED BY THE CONTRACTOR, SHALL REMAIN THE PROPERTY OF THE STATE AND SHALL BE DELIVERED BY CONTRACTOR TO THE STATE'S TRAFFIC SIGNAL MAINTENANCE CONTRACTOR'S MAIN FACILITY AS PER THE TRAFFIC SIGNAL SPECIFICATIONS.

1	EACH	CONTROLLER AND CABINET (COMPLETE)
1	EACH	MASTER CONTROLLER

THE FOLLOWING ITEMS SHALL BE REMOVED BY THE CONTRACTOR AND SHALL BE DISPOSED OF BY THEM OUTSIDE THE RIGHT-OF-WAY AT THEIR EXPENSE. THE SALVAGE VALUE OF THE REMOVED EQUIPMENT SHALL BE REFLECTED IN THE CONTRACT BID PRICE.

4	EACH	STEEL MAST ARM ASSEMBLY AND POST
4	EACH	TRAFFIC SIGNAL POST
4	EACH	3-SECTION SIGNAL HEAD
10	EACH	5-SECTION SIGNAL HEAD
1	EACH	SERVICE INSTALLATION
8	EACH	TRAFFIC SIGNAL BACKPLATE

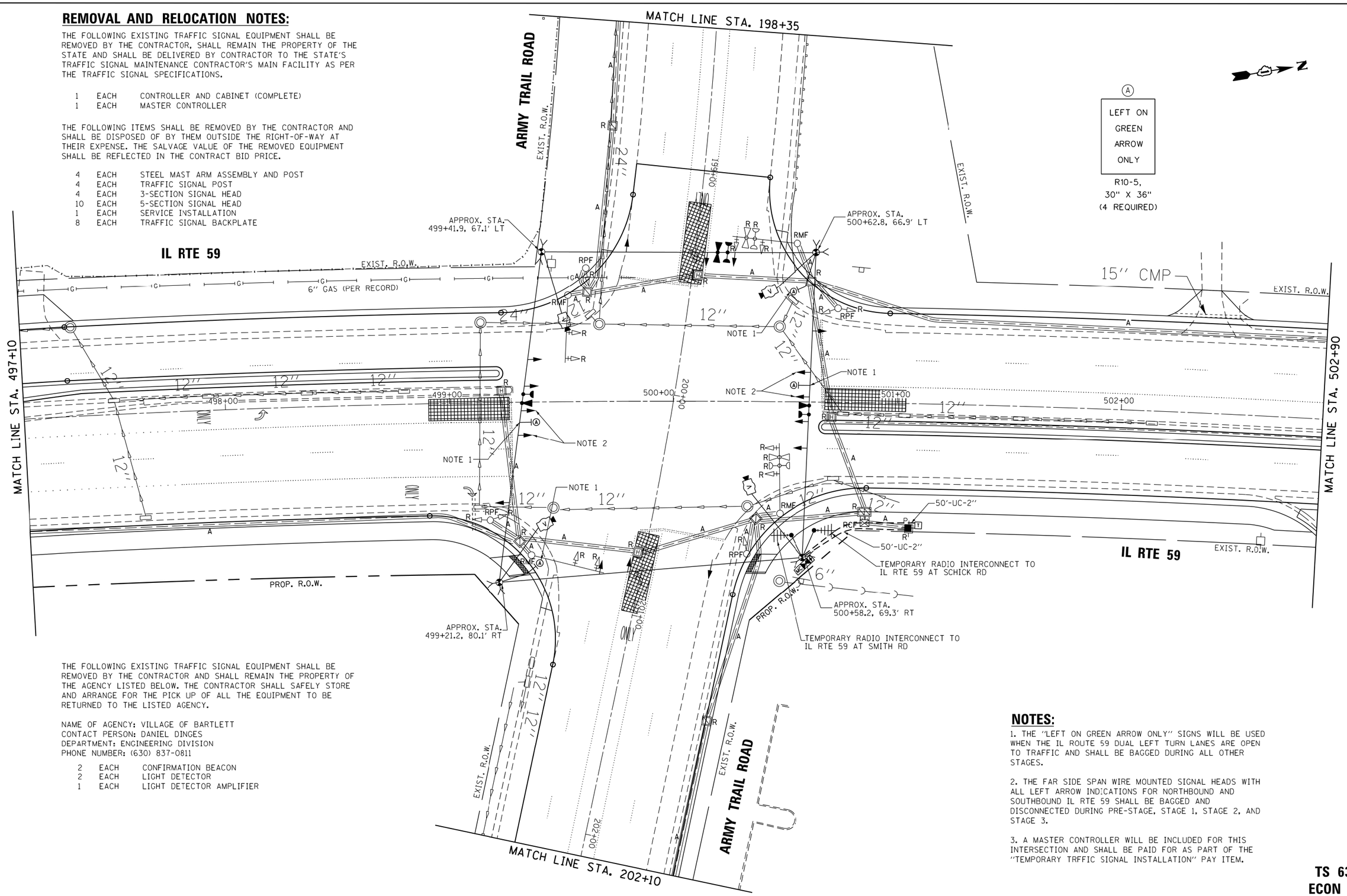

THE FOLLOWING EXISTING TRAFFIC SIGNAL EQUIPMENT SHALL BE REMOVED BY THE CONTRACTOR AND SHALL REMAIN THE PROPERTY OF THE AGENCY LISTED BELOW. THE CONTRACTOR SHALL SAFELY STORE AND ARRANGE FOR THE PICK UP OF ALL THE EQUIPMENT TO BE RETURNED TO THE LISTED AGENCY.

NAME OF AGENCY: VILLAGE OF BARTLETT
CONTACT PERSON: DANIEL DINGES
DEPARTMENT: ENGINEERING DIVISION
PHONE NUMBER: (630) 837-0811

2	EACH	CONFIRMATION BEACON
2	EACH	LIGHT DETECTOR
1	EACH	LIGHT DETECTOR AMPLIFIER

NOTES:

1. THE "LEFT ON GREEN ARROW ONLY" SIGNS WILL BE USED WHEN THE IL ROUTE 59 DUAL LEFT TURN LANES ARE OPEN TO TRAFFIC AND SHALL BE BAGGED DURING ALL OTHER STAGES.

2. THE FAR SIDE SPAN WIRE MOUNTED SIGNAL HEADS WITH ALL LEFT ARROW INDICATIONS FOR NORTHBOUND AND SOUTHBOUND IL RTE 59 SHALL BE BAGGED AND DISCONNECTED DURING PRE-STAGE, STAGE 1, STAGE 2, AND STAGE 3.

3. A MASTER CONTROLLER WILL BE INCLUDED FOR THIS INTERSECTION AND SHALL BE PAID FOR AS PART OF THE "TEMPORARY TRFFIC SIGNAL INSTALLATION" PAY ITEM.

TS 6365
ECON 116

GANDHI AND ASSOCIATES, INC.
ENGINEERS AND PLANNERS
6035 N. NORTHWEST HIGHWAY
SUITE 200
CHICAGO, ILLINOIS 60631 TEL.:7731774-5900

USER NAME = $USER$	DESIGNED - PKG	REVISED -	
	DRAWN - EA, AV	REVISED -	
PLOT SCALE = $SCALE$	CHECKED - PKG	REVISED -	
PLOT DATE = $DATE$	DATE - 7/27/2018	REVISED -	

STATE OF ILLINOIS
DEPARTMENT OF TRANSPORTATION

TEMPORARY TRAFFIC SIGNAL INSTALLATION PLAN AND REMOVE EXISTING TRAFFIC SIGNAL EQUIPMENT PLAN
IL RTE 59 AT ARMY TRAIL ROAD (SHEET 1 OF 2)

SCALE: 1"=20' | SHEET NO. OF SHEETS | STA. TO STA.

F.A.P. RTE.	SECTION	COUNTY	TOTAL SHEETS	SHEET NO.
338	110TS-N	DUPAGE	133	76
		CONTRACT NO. 62F19		

FED. ROAD DIST. NO. - | ILLINOIS | FED. AID PROJECT

FILE NAME = $FILE$

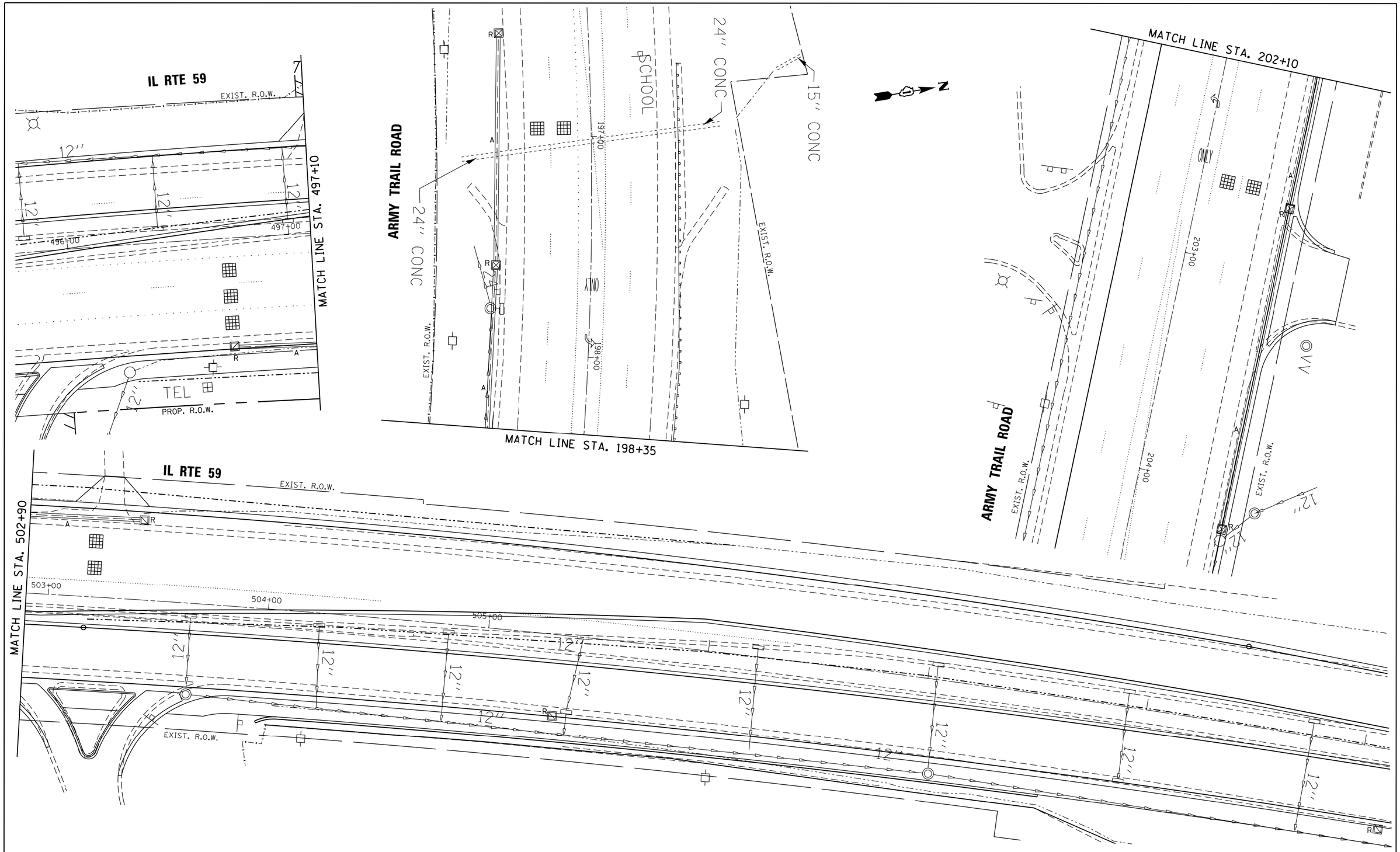

TS 6365
ECON 116

GANDHI AND ASSOCIATES, INC. ENGINEERS AND PLANNERS 6035 N. NORTHWEST HIGHWAY SUITE 206 CHICAGO, ILLINOIS 60631 TEL:(773)774-5900	USER NAME = $USER$	DESIGNED - PKG	REVISED -	STATE OF ILLINOIS DEPARTMENT OF TRANSPORTATION	TEMPORARY TRAFFIC SIGNAL INSTALLATION PLAN AND REMOVE EXISTING TRAFFIC SIGNAL EQUIPMENT PLAN IL RTE 59 AT ARMY TRAIL ROAD (SHEET 2 OF 2)	F.A.P. RTE.	SECTION	COUNTY	TOTAL SHEETS	SHEET NO.
		DRAWN - EA, AV	REVISED -			338	110TS-N	DUPAGE	133	77
	PLOT SCALE = $SCALE$	CHECKED - PKG	REVISED -					CONTRACT NO. 62F19		
	PLOT DATE = $DATE$	DATE - 7/27/2018	REVISED -		SCALE: 1"=20' SHEET NO. OF SHEETS STA. TO STA.	FED. ROAD DIST. NO. -	ILLINOIS	FED. AID PROJECT		

FILE NAME = $FILEL$

TEMPORARY CONTROLLER SEQUENCE

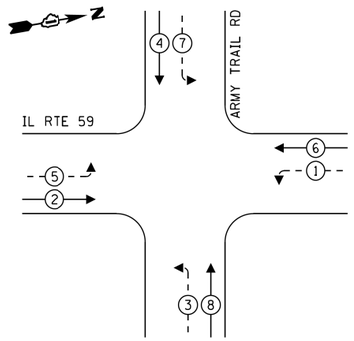

LEGEND:

- PROTECTED PHASE
- PROTECTED/PERMITTED PHASE
- PEDESTRIAN PHASE
- OL — OVERLAP

TEMPORARY EMERGENCY VEHICLE PREEMPTION SEQUENCE

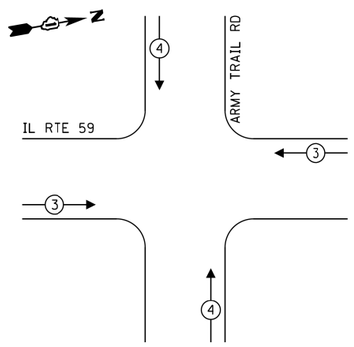

TRAFFIC SIGNAL ELECTRICAL SERVICE REQUIREMENTS

TYPE	NO. OF LAMPS	LED WATTAGE	% OPERATION	TOTAL WATTAGE
SIGNAL (RED)	12	11	50	66.0
(YELLOW)	12	20	5	12.0
(GREEN)	12	12	45	64.8
PERMISSIVE ARROW	16	10	10	16.0
PED. SIGNAL	-	20	100	-
CONTROLLER	2	100	100	200.0
UPS	1	25	100	25.0
VIDEO SYSTEM	1	150	100	150.0
BLANK-OUT SIGN	-	25	5	-
FLASHER	-	-	50	-
STREET NAME SIGN	-	120	50	-
LUMINAIRE	-	-	-	-
			TOTAL =	533.8

ENERGY COSTS TO:

ILLINOIS DEPARTMENT OF TRANSPORTATION
201 WEST CENTER COURT
SCHAUMBURG, ILLINOIS 60196-1096

ENERGY SUPPLY: CONTACT: RENEE MAZARIEGOS
PHONE: (847) 608-2331
COMPANY: COMMONWEALTH EDISON
ACCOUNT NUMBER: ---

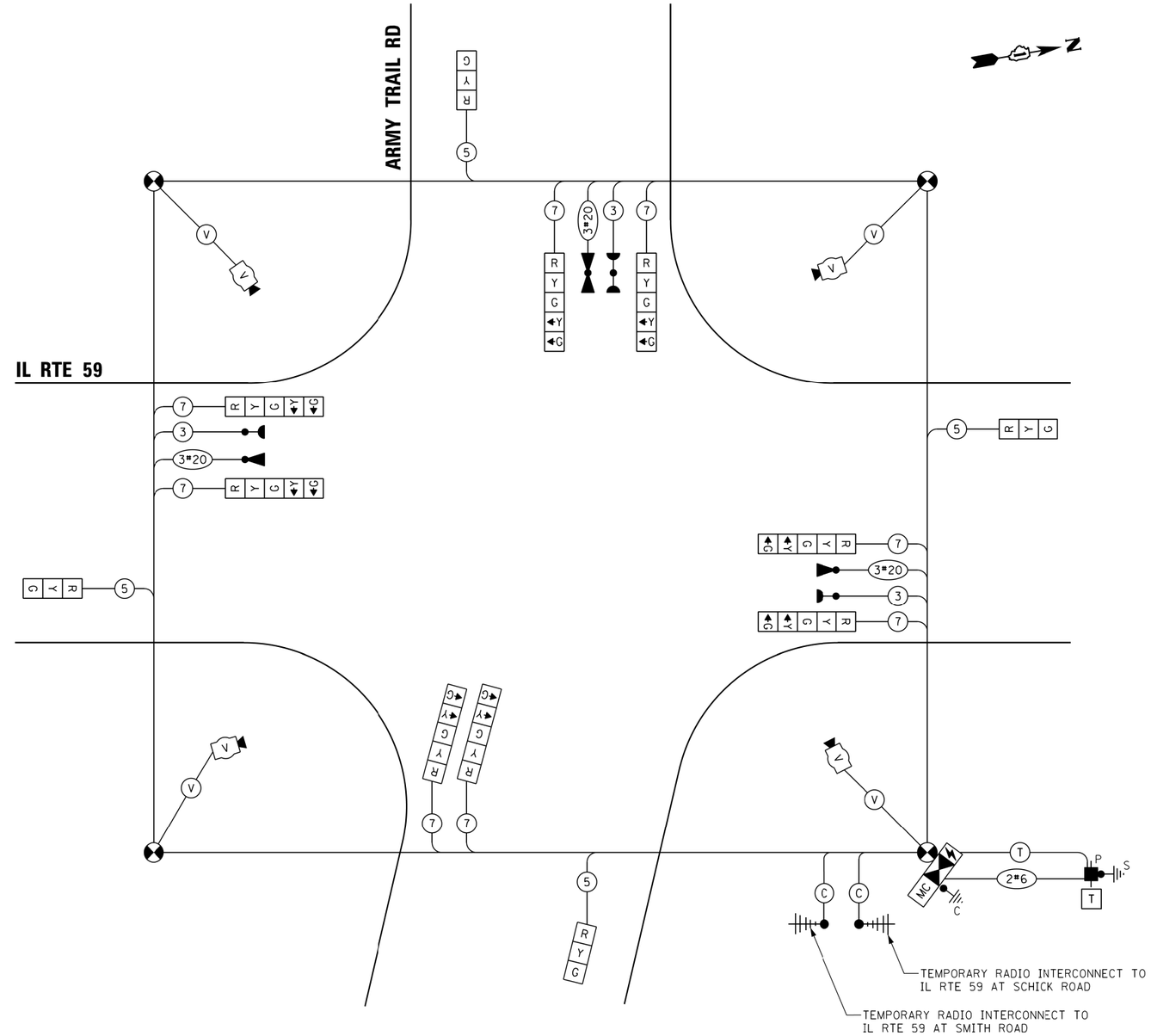

NOTES:

1. THE SIGNAL HEADS WILL NEED TO BE MOVED TO ALIGN WITH THE LANES (INCLUDING EVP) FOR EACH STAGE AS DIRECTED BY THE ENGINEER.

CABLE PLAN

(NOT TO SCALE)

(PRE–STAGE, STAGE 1, STAGE 2, AND STAGE 3)

TS 6365
ECON 116

FILE NAME = $FILEL$

GANDHI AND ASSOCIATES, INC.
ENGINEERS AND PLANNERS
6035 NORTHWEST HIGHWAY
SUITE 300
CHICAGO, ILLINOIS 60631 TEL.(773)774-5900

USER NAME = $USER$	DESIGNED - PKG	REVISED -	
	DRAWN - EA, AV	REVISED -	
PLOT SCALE = $SCALE$	CHECKED - PKG	REVISED -	
PLOT DATE = $DATE$	DATE - 7/27/2018	REVISED -	

STATE OF ILLINOIS
DEPARTMENT OF TRANSPORTATION

TEMPORARY CABLE PLAN, TEMPORARY PHASE DESIGNATION DIAGRAM, AND TEMPORARY EMERGENCY VEHICLE PREEMPTION SEQUENCE
IL RTE 59 AT ARMY TRAIL ROAD

SCALE: N.T.S. | SHEET NO. OF SHEETS | STA. TO STA.

F.A.P. RTE.	SECTION	COUNTY	TOTAL SHEETS	SHEET NO.
338	110TS-N	DUPAGE	133	78
		CONTRACT NO. 62F19		

FED. ROAD DIST. NO. - | ILLINOIS | FED. AID PROJECT

TEMPORARY CONTROLLER SEQUENCE

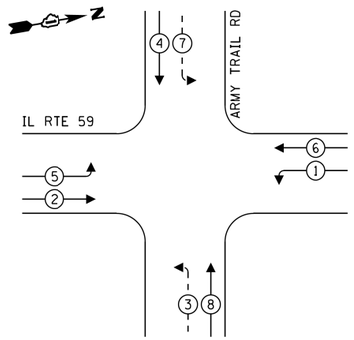

LEGEND:

- PROTECTED PHASE
- PROTECTED/PERMITTED PHASE
- PEDESTRIAN PHASE
- OL OVERLAP

TEMPORARY EMERGENCY VEHICLE PREEMPTION SEQUENCE

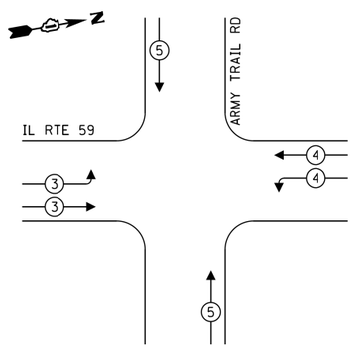

TRAFFIC SIGNAL ELECTRICAL SERVICE REQUIREMENTS

TYPE	NO. OF LAMPS	LED WATTAGE	% OPERATION	TOTAL WATTAGE
SIGNAL (RED)	16	11	50	88.0
(YELLOW)	16	20	5	16.0
(GREEN)	16	12	45	86.4
PERMISSIVE ARROW	8	10	10	8.0
PED. SIGNAL	-	20	100	-
CONTROLLER	2	100	100	200.0
UPS	1	25	100	25.0
VIDEO SYSTEM	1	150	100	150.0
BLANK-OUT SIGN	-	25	5	-
FLASHER	-	-	50	-
STREET NAME SIGN	-	120	50	-
LUMINAIRE	-	-	-	-
			TOTAL =	573.4

ENERGY COSTS TO:

ILLINOIS DEPARTMENT OF TRANSPORTATION
201 WEST CENTER COURT
SCHAUMBURG, ILLINOIS 60196-1096

ENERGY SUPPLY: CONTACT: RENEE MAZARIEGOS
PHONE: (847) 608-2331
COMPANY: COMMONWEALTH EDISON
ACCOUNT NUMBER: ---

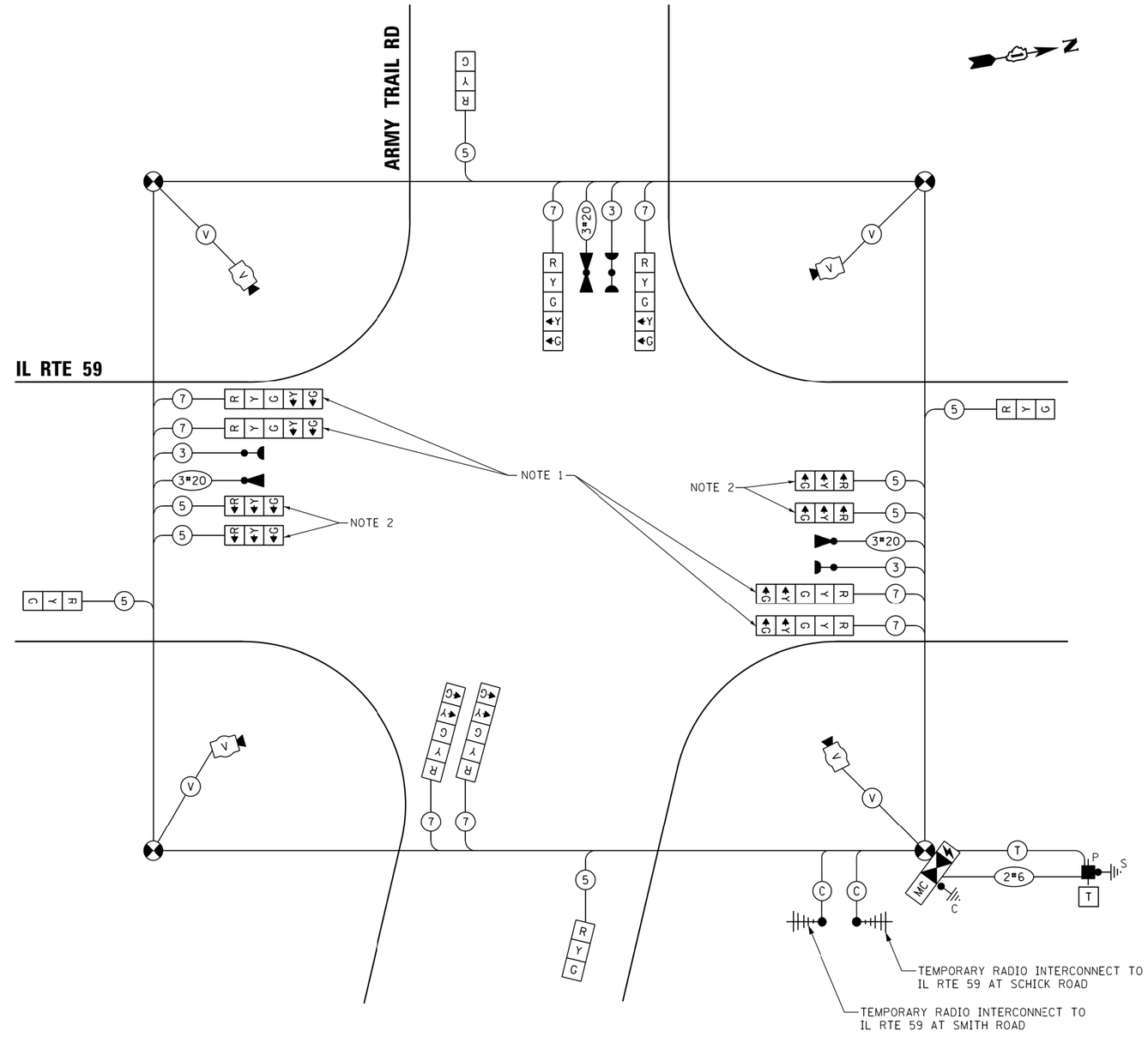

NOTES:

1. THE GREEN AND YELLOW LEFT ARROW SECTIONS IN THE 5-SECTION SIGNAL HEADS SHALL BE BAGGED DURING THIS STAGE. THE ARROW SECTIONS MUST BE DISCONNECTED.

2. ACTIVATE SIGNAL HEADS IN THIS STAGE.

3. UNCOVER R10-5 SIGNS WHEN THE DUAL LEFT TURN LANES ARE OPEN TO TRAFFIC.

CABLE PLAN

(NOT TO SCALE)

(IL RTE 59 DUAL LEFT TURN LANES ARE OPEN TO TRAFFIC)

TS 6365
ECON 116

FILE NAME = $FILE1$

GANDHI AND ASSOCIATES, INC.
ENGINEERS AND PLANNERS
6035 N. NORTHWEST HIGHWAY
SUITE 306
CHICAGO, ILLINOIS 60631 TEL.(773)774-5900

USER NAME = $USER$	DESIGNED - PKG	REVISED -	
	DRAWN - EA, AV	REVISED -	
PLOT SCALE = $SCALE$	CHECKED - PKG	REVISED -	
PLOT DATE = $DATE$	DATE - 7/27/2018	REVISED -	

STATE OF ILLINOIS
DEPARTMENT OF TRANSPORTATION

TEMPORARY CABLE PLAN, TEMPORARY PHASE DESIGNATION DIAGRAM, AND TEMPORARY EMERGENCY VEHICLE PREEMPTION SEQUENCE
IL RTE 59 AT ARMY TRAIL ROAD

SCALE: N.T.S. | SHEET NO. OF SHEETS | STA. TO STA.

F.A.P. RTE.	SECTION	COUNTY	TOTAL SHEETS	SHEET NO.
338	110TS-N	DUPAGE	133	79
		CONTRACT NO. 62F19		

FED. ROAD DIST. NO. - | ILLINOIS | FED. AID PROJECT

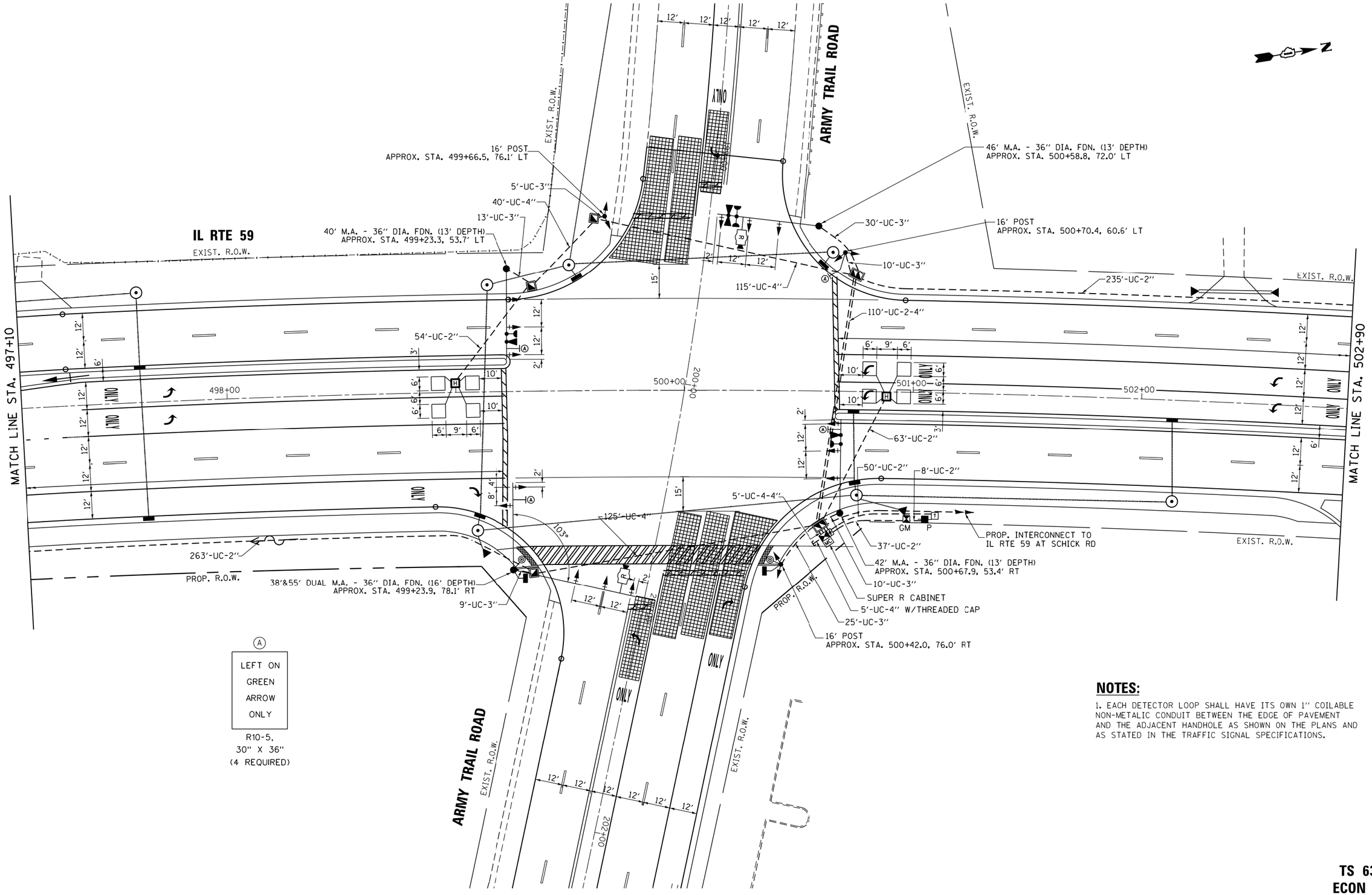

Ⓐ

LEFT ON
GREEN
ARROW
ONLY

R10-5,
30" X 36"
(4 REQUIRED)

NOTES:

1. EACH DETECTOR LOOP SHALL HAVE ITS OWN 1" COILABLE NON-METALIC CONDUIT BETWEEN THE EDGE OF PAVEMENT AND THE ADJACENT HANDHOLE AS SHOWN ON THE PLANS AND AS STATED IN THE TRAFFIC SIGNAL SPECIFICATIONS.

TS 6365
ECON 116

FILE NAME = $FILE$

GANDHI AND ASSOCIATES, INC.
ENGINEERS AND PLANNERS
6035 N. NORTHWEST HIGHWAY
SUITE 206
CHICAGO, ILLINOIS 60631 TEL.(773)774-5910

USER NAME = $USER$	DESIGNED - PKG	REVISED -	
	DRAWN - EA, AV	REVISED -	
PLOT SCALE = $SCALE$	CHECKED - PKG	REVISED -	
PLOT DATE = $DATE$	DATE - 7/27/2018	REVISED -	

STATE OF ILLINOIS
DEPARTMENT OF TRANSPORTATION

TRAFFIC SIGNAL INSTALLATION PLAN
IL RTE 59 AT ARMY TRAIL ROAD (SHEET 1 OF 2)

SCALE: 1"=20' | SHEET NO. OF SHEETS | STA. TO STA.

F.A.P. RTE.	SECTION	COUNTY	TOTAL SHEETS	SHEET NO.
338	110TS-N	DUPAGE	133	80
		CONTRACT NO. 62F19		

FED. ROAD DIST. NO. - | ILLINOIS | FED. AID PROJECT

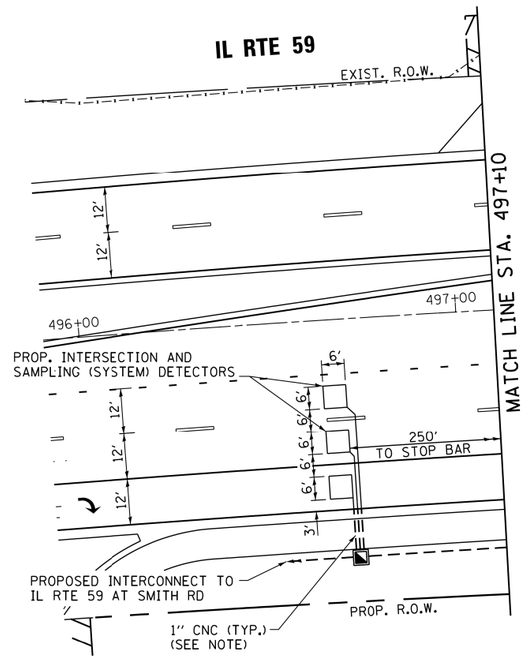

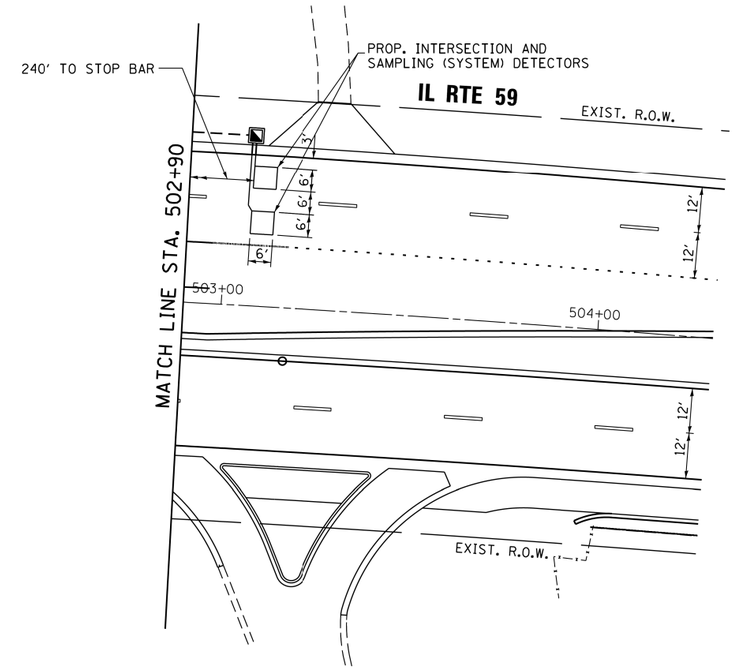

NOTES:

1. EACH DETECTOR LOOP SHALL HAVE ITS OWN 1" COILABLE NON-METALIC CONDUIT BETWEEN THE EDGE OF PAVEMENT AND THE ADJACENT HANDHOLE AS SHOWN ON THE PLANS AND AS STATED IN THE TRAFFIC SIGNAL SPECIFICATIONS.

TS 6365
ECON 116

FILE NAME = $FILEL$

GANDHI AND ASSOCIATES, INC. ENGINEERS AND PLANNERS 6035 N. NORTHWEST HIGHWAY SUITE 306 CHICAGO, ILLINOIS 60631 TEL.(773)774-5910	USER NAME = $USER$	DESIGNED - PKG	REVISED -
		DRAWN - EA, AV	REVISED -
	PLOT SCALE = $SCALE$	CHECKED - PKG	REVISED -
	PLOT DATE = $DATE$	DATE - 7/27/2018	REVISED -

STATE OF ILLINOIS
DEPARTMENT OF TRANSPORTATION

TRAFFIC SIGNAL INSTALLATION PLAN
IL RTE 59 AT ARMY TRAIL ROAD (SHEET 2 OF 2)

SCALE: 1"=20' | SHEET NO. OF SHEETS | STA. TO STA.

F.A.P. RTE.	SECTION	COUNTY	TOTAL SHEETS	SHEET NO.
338	110TS-N	DUPAGE	133	81

CONTRACT NO. 62F19

FED. ROAD DIST. NO. - | ILLINOIS | FED. AID PROJECT

PROPOSED CONTROLLER SEQUENCE

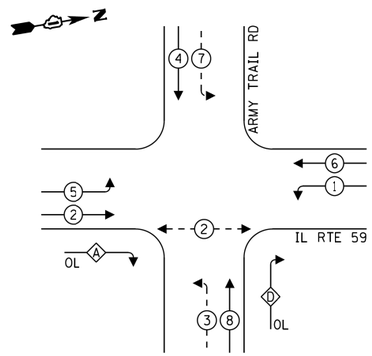

LEGEND:

- PROTECTED PHASE
- PROTECTED/PERMITTED PHASE
- PEDESTRIAN PHASE
- OL OVERLAP

RIGHT TURN OVERLAP PHASE DESIGNATION:

OVERLAP LETTER		PERMISSIVE PHASE		PROTECTED PHASE
A	=	2	+	3
D	=	8	+	1

PROPOSED EMERGENCY VEHICLE PREEMPTION SEQUENCE

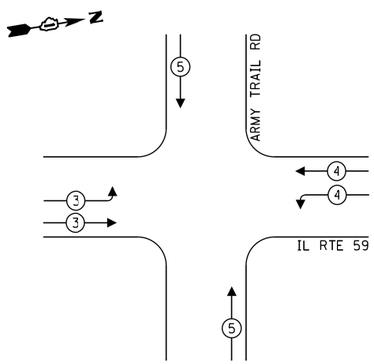

TRAFFIC SIGNAL ELECTRICAL SERVICE REQUIREMENTS

TYPE	NO. OF LAMPS	LED WATTAGE	% OPERATION	TOTAL WATTAGE
SIGNAL (RED)	20	11	50	110.0
(YELLOW)	20	20	5	20.0
(GREEN)	20	12	45	108.0
PERMISSIVE ARROW	16	10	10	16.0
PED. SIGNAL	2	20	100	40.0
CONTROLLER	2	100	100	200.0
UPS	1	25	100	25.0
VIDEO SYSTEM	-	150	100	-
BLANK-OUT SIGN	-	25	5	-
FLASHER	-	-	50	-
STREET NAME SIGN	-	120	50	-
LUMINAIRE	-	-	-	-
			TOTAL =	519.0

ENERGY COSTS TO:

ILLINOIS DEPARTMENT OF TRANSPORTATION
201 WEST CENTER COURT
SCHAUMBURG, ILLINOIS 60196-1096

ENERGY SUPPLY: CONTACT: RENEE MAZARIEGOS
PHONE: (847) 608-2331
COMPANY: COMMONWEALTH EDISON
ACCOUNT NUMBER: ---

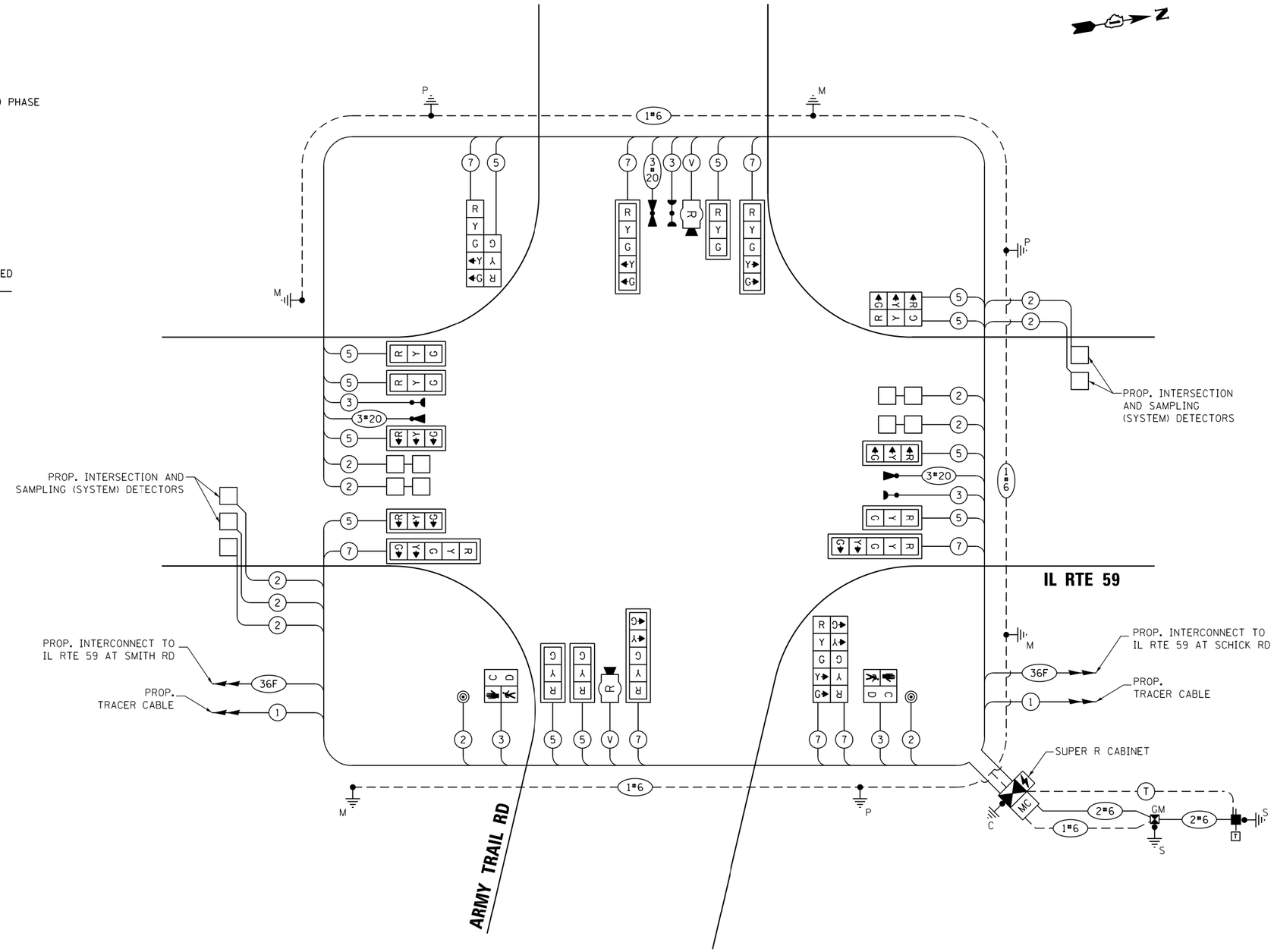

CABLE PLAN
(NOT TO SCALE)

TS 6365
ECON 116

GANDHI AND ASSOCIATES, INC. ENGINEERS AND PLANNERS 6035 N. NORTHWEST HIGHWAY SUITE 306 CHICAGO, ILLINOIS 60631 TEL.(773)774-5900	USER NAME = $USER$	DESIGNED - PKG	REVISED -
		DRAWN - EA, AV	REVISED -
	PLOT SCALE = $SCALE$	CHECKED - PKG	REVISED -
	PLOT DATE = $DATE$	DATE - 7/27/2018	REVISED -

STATE OF ILLINOIS
DEPARTMENT OF TRANSPORTATION

CABLE PLAN, PHASE DESIGNATION DIAGRAM, AND EMERGENCY VEHICLE PREEMPTION SEQUENCE
IL RTE 59 AT ARMY TRAIL RD

SCALE: N.T.S. | SHEET NO. OF SHEETS | STA. TO STA.

F.A.P. RTE.	SECTION	COUNTY	TOTAL SHEETS	SHEET NO.
338	110TS-N	DUPAGE	133	82
		CONTRACT NO. 62F19		

FED. ROAD DIST. NO. - | ILLINOIS | FED. AID PROJECT

FILE NAME = $FILE$

SIGN PANEL – TYPE 1 OR TYPE 2

ALL DIMENSIONS ARE IN INCHES UNLESS NOTED OTHERWISE

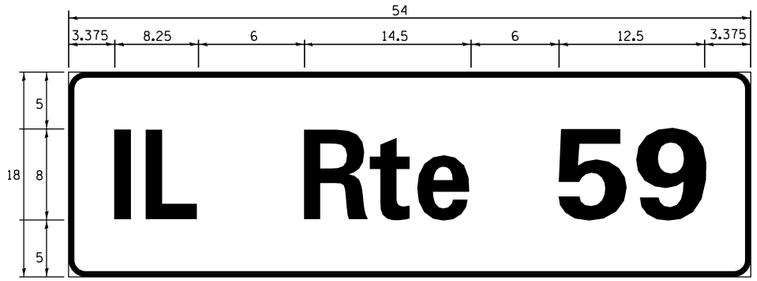

DESIGN SERIES	AREA (SQ FT)	SIGN PANEL TYPE	SHEETING TYPE	QTY. REQUIRED
D	6.75	1	ZZ	2

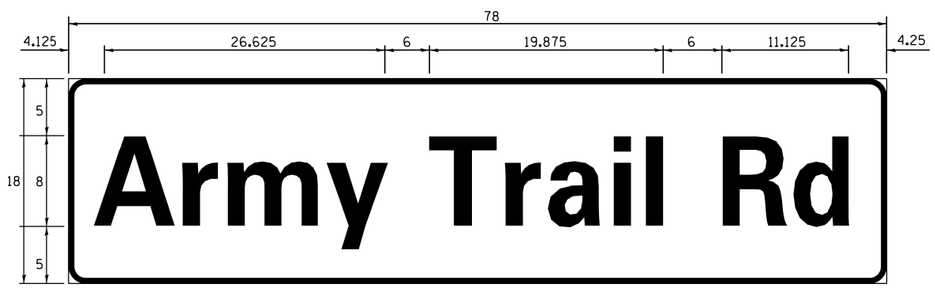

DESIGN SERIES	AREA (SQ FT)	SIGN PANEL TYPE	SHEETING TYPE	QTY. REQUIRED
D	9.75	2	ZZ	2

NOTE: FOR ADDITIONAL DESIGN AND INSTALLATION INFORMATION PLEASE SEE DISTRICT ONE MAST ARM MOUNTED STREET NAME SIGNS DETAIL.

SCHEDULE OF QUANTITIES

	ITEM DESCRIPTION	UNITS	TOTAL QTY.
	SIGN PANEL - TYPE 1	SQ FT	43.5
	SIGN PANEL - TYPE 2	SQ FT	19.5
	UNDERGROUND CONDUIT, GALVANIZED STEEL, 2" DIA.	FOOT	710
	UNDERGROUND CONDUIT, GALVANIZED STEEL, 3" DIA.	FOOT	144
	UNDERGROUND CONDUIT, GALVANIZED STEEL, 4" DIA.	FOOT	525
	HANDHOLE	EACH	5
	HEAVY-DUTY HANDHOLE	EACH	2
	DOUBLE HANDHOLE	EACH	2
	TRANSCEIVER - FIBER OPTIC	EACH	1
	ELECTRIC CABLE IN CONDUIT, SIGNAL NO. 14 2C	FOOT	233
	ELECTRIC CABLE IN CONDUIT, SIGNAL NO. 14 3C	FOOT	974
	ELECTRIC CABLE IN CONDUIT, SIGNAL NO. 14 5C	FOOT	2859
	ELECTRIC CABLE IN CONDUIT, SIGNAL NO. 14 7C	FOOT	1419
	ELECTRIC CABLE IN CONDUIT, LEAD-IN, NO. 14 1 PAIR	FOOT	2962
	ELECTRIC CABLE IN CONDUIT, SERVICE, NO. 6 2C	FOOT	95
	ELECTRIC CABLE IN CONDUIT, EQUIPMENT GROUNDING CONDUCTOR, NO. 6 1C	FOOT	719
	TRAFFIC SIGNAL POST, GALVANIZED STEEL 16 FT.	EACH	3
	STEEL MAST ARM ASSEMBLY AND POLE, 40 FT.	EACH	1
	STEEL MAST ARM ASSEMBLY AND POLE, 42 FT.	EACH	1
	STEEL MAST ARM ASSEMBLY AND POLE, 46 FT.	EACH	1
	STEEL MAST ARM ASSEMBLY AND POLE WITH DUAL MAST ARMS, 38 FT. AND 55 FT.	EACH	1
	CONCRETE FOUNDATION, TYPE A	FOOT	16
	CONCRETE FOUNDATION, TYPE C	FOOT	4
	CONCRETE FOUNDATION, TYPE E 36-INCH DIAMETER	FOOT	55
	SIGNAL HEAD, LED, 1-FACE, 3-SECTION, MAST ARM MOUNTED	EACH	9
	SIGNAL HEAD, LED, 1-FACE, 3-SECTION, BRACKET MOUNTED	EACH	3
	SIGNAL HEAD, LED, 1-FACE, 5-SECTION, BRACKET MOUNTED	EACH	3
	SIGNAL HEAD, LED, 1-FACE, 5-SECTION, MAST ARM MOUNTED	EACH	5
	PEDESTRIAN SIGNAL HEAD, LED, 1-FACE, BRACKET MOUNTED WITH COUNTDOWN TIMER	EACH	2
	TRAFFIC SIGNAL BACKPLATE, LOUVERED, FORMED PLASTIC	EACH	14
	INDUCTIVE LOOP DETECTOR	EACH	9
	DETECTOR LOOP, TYPE I	FOOT	441
*	LIGHT DETECTOR	EACH	3
*	LIGHT DETECTOR AMPLIFIER	EACH	1
	PEDESTRIAN PUSH-BUTTON	EACH	2
	TEMPORARY TRAFFIC SIGNAL INSTALLATION	EACH	1
	REMOVE EXISTING TRAFFIC SIGNAL EQUIPMENT	EACH	1
	REMOVE EXISTING HANDHOLE	EACH	18
	REMOVE EXISTING DOUBLE HANDHOLE	EACH	1
	REMOVE EXISTING CONCRETE FOUNDATION	EACH	9
*	EMERGENCY VEHICLE PRIORITY SYSTEM LINE SENSOR CABLE, NO. 20 3/C	FOOT	727
	FULL-ACTUATED CONTROLLER AND TYPE SUPER R CABINET (SPECIAL)	EACH	1
	SERVICE INSTALLATION, GROUND MOUNTED, METERED	EACH	1
	RADAR VEHICLE DETECTION SYSTEM, SINGLE APPROACH, STOP BAR	EACH	2
	UNINTERRUPTABLE POWER SUPPLY, SPECIAL	EACH	1
	TEMPORARY TRAFFIC SIGNAL TIMING	EACH	1

* 100% COST TO VILLAGE OF BARTLETT

TS 6365
ECON 116

FILE NAME = $FILEL$

GANDHI AND ASSOCIATES, INC.
ENGINEERS AND PLANNERS
6035 N. NORTHWEST HIGHWAY
SUITE 306
CHICAGO, ILLINOIS 60631 TEL./773)774-5910

USER NAME = $USER$	DESIGNED - PKG	REVISED -	
	DRAWN - EA, AV	REVISED -	
PLOT SCALE = $SCALE$	CHECKED - PKG	REVISED -	
PLOT DATE = $DATE$	DATE - 7/27/2018	REVISED -	

STATE OF ILLINOIS
DEPARTMENT OF TRANSPORTATION

MAST ARM MOUNTED STREET NAME SIGNS
AND SCHEDULE OF QUANTTIES
IL RTE 59 AT ARMY TRAIL RD

SCALE: N.T.S. | SHEET NO. OF SHEETS | STA. TO STA.

F.A.P. RTE.	SECTION	COUNTY	TOTAL SHEETS	SHEET NO.
338	110TS-N	DUPAGE	133	83

CONTRACT NO. 62F19

FED. ROAD DIST. NO. - | ILLINOIS | FED. AID PROJECT

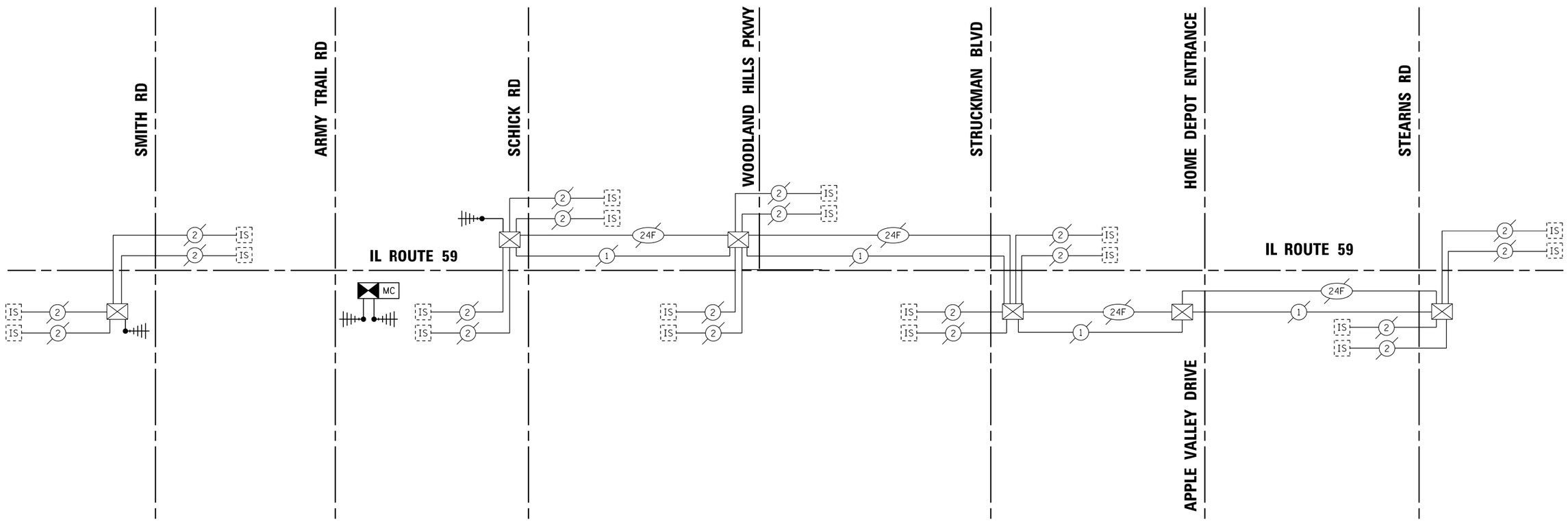

ECON 116

GANDHI AND ASSOCIATES, INC. ENGINEERS AND PLANNERS 6035 N. NORTHWEST HIGHWAY SUITE 306 CHICAGO, ILLINOIS 60631 TEL.(773)774-5900	USER NAME = $USER$	DESIGNED - PKG	REVISED -	STATE OF ILLINOIS DEPARTMENT OF TRANSPORTATION	TEMPORARY INTERCONNECT SCHEMATIC IL RTE 59 FROM SMITH ROAD TO SCHICK ROAD	F.A.P. RTE.	SECTION	COUNTY	TOTAL SHEETS / SHEET NO.
		DRAWN - EA, AV	REVISED -			338	110TS-N	DUPAGE	133 / 84
	PLOT SCALE = $SCALE$	CHECKED - PKG	REVISED -					CONTRACT NO. 62F19	
	PLOT DATE = $DATE$	DATE - 7/27/2018	REVISED -		SCALE: N.T.S. / SHEET NO. OF SHEETS / STA. TO STA.	FED. ROAD DIST. NO. 1	ILLINOIS	FED. AID PROJECT	

FILE NAME = $FILEL$

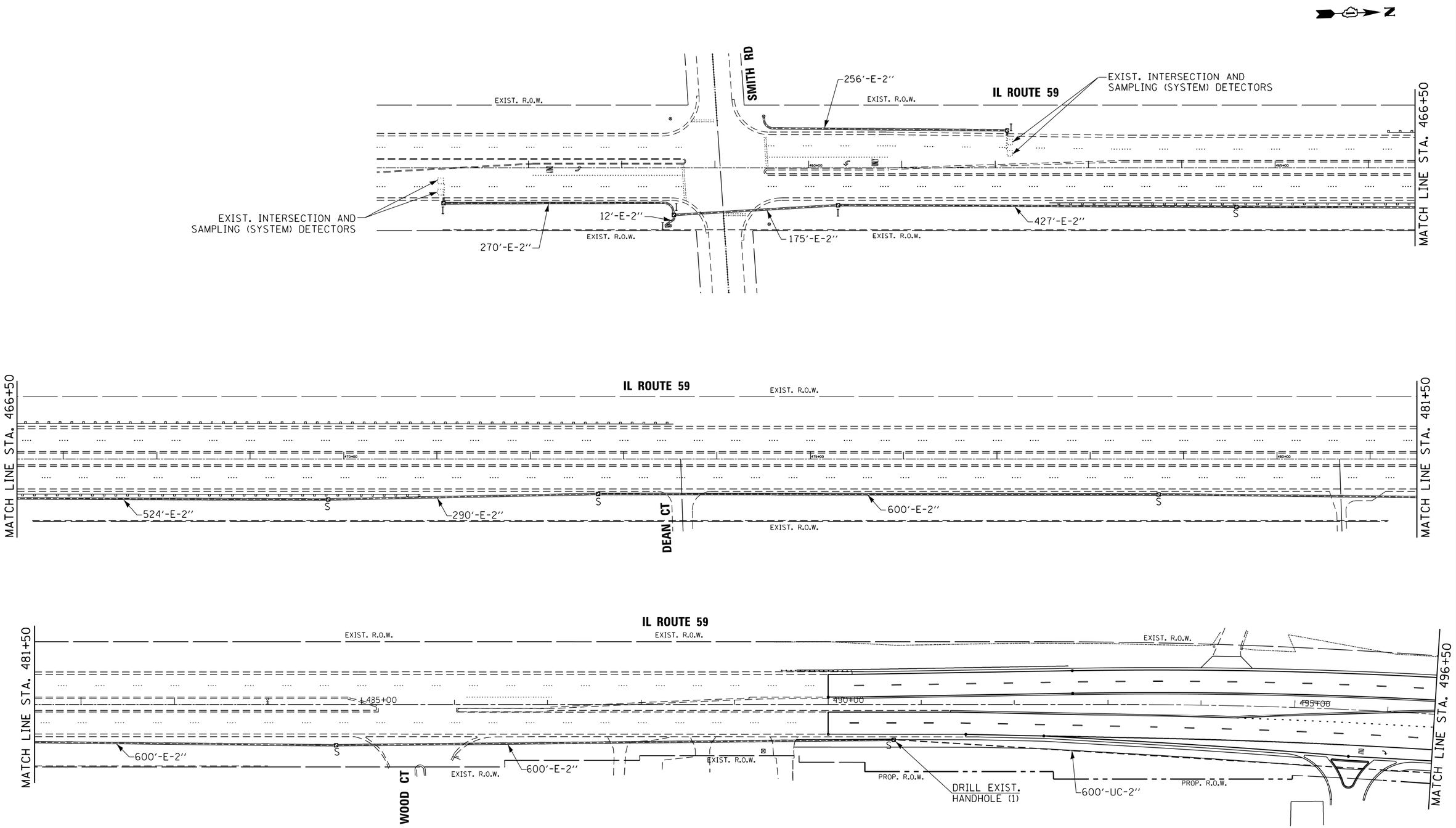

ECON 116

GANDHI AND ASSOCIATES, INC. ENGINEERS AND PLANNERS 6035 N. NORTHWEST HIGHWAY SUITE 306 CHICAGO, ILLINOIS 60631 TEL./773/774-5910	USER NAME = $USER$	DESIGNED - PKG	REVISED -	STATE OF ILLINOIS DEPARTMENT OF TRANSPORTATION	PROPOSED INTERCONNECT PLAN IL RTE 59 FROM SMITH ROAD TO SCHICK ROAD (SHEET 1 OF 2)
		DRAWN - EA, AV	REVISED -		
	PLOT SCALE = $SCALE$	CHECKED - PKG	REVISED -		
	PLOT DATE = $DATE$	DATE - 7/27/2018	REVISED -		SCALE: 1''=50' SHEET NO. OF SHEETS STA. TO STA.

F.A.P. RTE.	SECTION	COUNTY	TOTAL SHEETS	SHEET NO.
338	110TS-N	DUPAGE	133	85
		CONTRACT NO. 62F19		
FED. ROAD DIST. NO. 1	ILLINOIS	FED. AID PROJECT		

FILE NAME = $FILE$

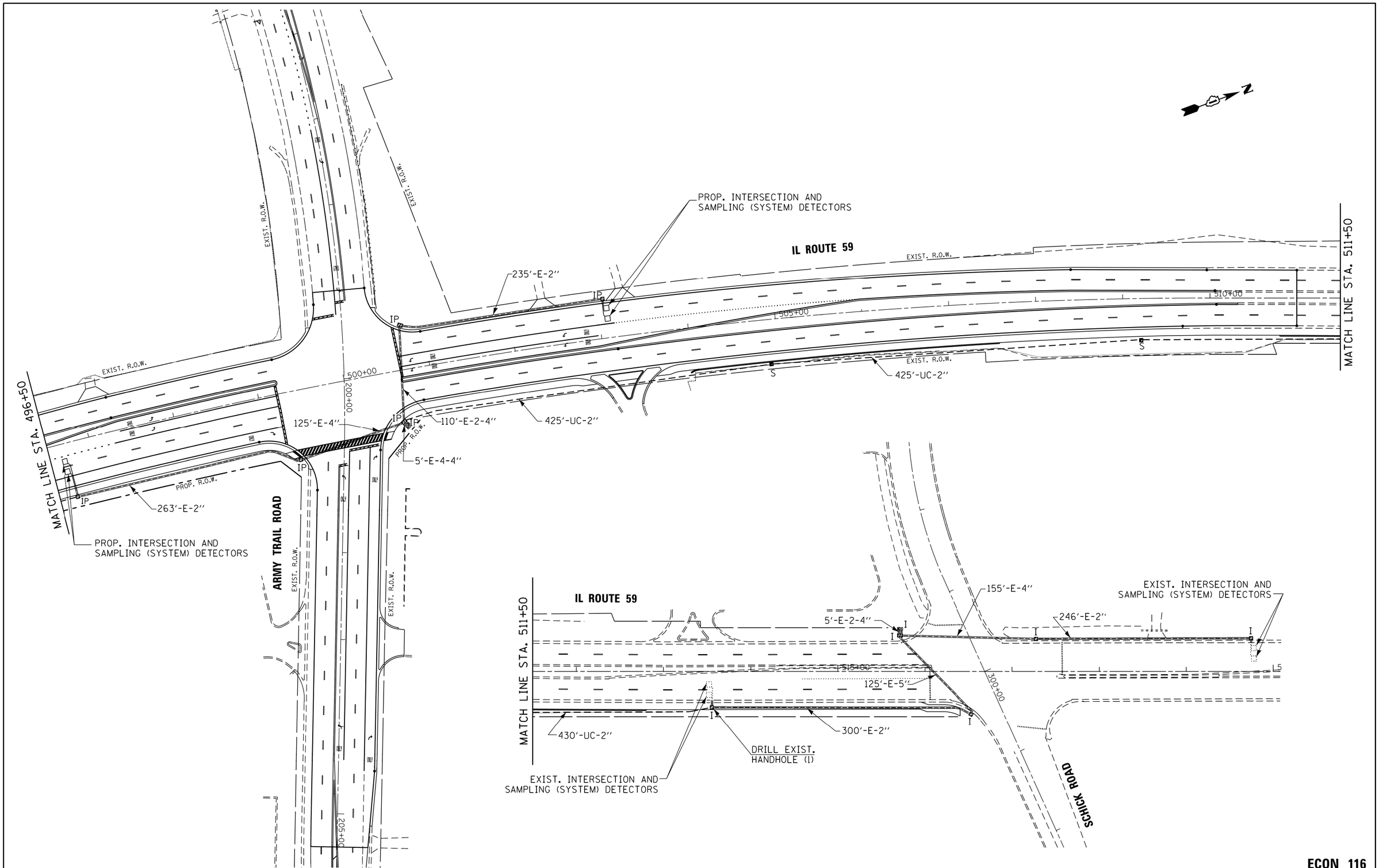

ECON 116

GANDHI AND ASSOCIATES, INC. ENGINEERS AND PLANNERS 6035 N. NORTHWEST HIGHWAY SUITE 306 CHICAGO, ILLINOIS 60631 TEL.(773)774-5910	USER NAME = $USER$	DESIGNED - PKG	REVISED -	STATE OF ILLINOIS DEPARTMENT OF TRANSPORTATION	PROPOSED INTERCONNECT PLAN IL RTE 59 FROM SMITH ROAD TO SCHICK ROAD (SHEET 2 OF 2)	F.A.P. RTE.	SECTION	COUNTY	TOTAL SHEETS / SHEET NO.
		DRAWN - EA, AV	REVISED -			338	110TS-N	DUPAGE	133 / 86
	PLOT SCALE = $SCALE$	CHECKED - PKG	REVISED -					CONTRACT NO. 62F19	
	PLOT DATE = $DATE$	DATE - 7/27/2018	REVISED -		SCALE: 1"=50' / SHEET NO. OF SHEETS / STA. TO STA.	FED. ROAD DIST. NO. 1	ILLINOIS	FED. AID PROJECT	

FILE NAME = $FILEL$

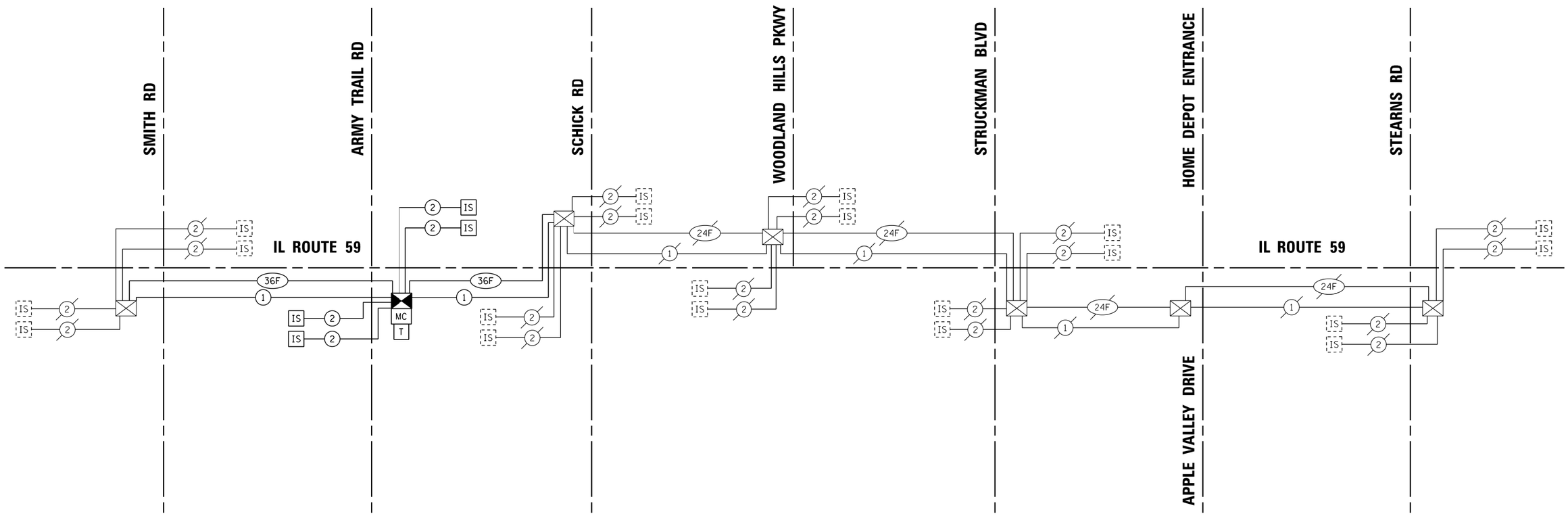

SCHEDULE OF QUANTITIES

ITEM DESCRIPTION	UNITS	TOTAL QTY.
UNDERGROUND CONDUIT, GALVANIZED STEEL, 2" DIA.	FOOT	1880
HANDHOLE	EACH	2
MAINTENANCE OF EXISTING TRAFFIC SIGNAL INSTALLATION	EACH	2
ELECTRIC CABLE IN CONDUIT, TRACER, NO. 14 1C	FOOT	6084
DRILL EXISTING HANDHOLE	EACH	2
REMOVE ELECTRIC CABLE FROM CONDUIT	FOOT	7518
MASTER CONTROLLER (SPECIAL)	EACH	1
FIBER OPTIC CABLE IN CONDUIT, NO. 62.5/125, MM12F SM24F	FOOT	6136
OPTIMIZE TRAFFIC SIGNAL SYSTEM	EACH	1

ECON 116

FILE NAME = $FILEL$

GANDHI AND ASSOCIATES, INC.
ENGINEERS AND PLANNERS
6035 N. NORTHWEST HIGHWAY
SUITE 306
CHICAGO, ILLINOIS 60631 TEL.(773)774-5910

USER NAME = $USER$	DESIGNED - PKG	REVISED -	
	DRAWN - EA, AV	REVISED -	
PLOT SCALE = $SCALE$	CHECKED - PKG	REVISED -	
PLOT DATE = $DATE$	DATE - 7/27/2018	REVISED -	

STATE OF ILLINOIS
DEPARTMENT OF TRANSPORTATION

PROPOSED INTERCONNECT SCHEMATIC AND SCHEDULE OF QUANTITIES
IL RTE 59
FROM SMITH ROAD TO STEARNS ROAD

SCALE: N.T.S. | SHEET NO. OF SHEETS | STA. TO STA.

F.A.P. RTE.	SECTION	COUNTY	TOTAL SHEETS	SHEET NO.
338	110TS-N	DUPAGE	133	87

CONTRACT NO. 62F19

FED. ROAD DIST. NO. 1 | ILLINOIS | FED. AID PROJECT

Bench Mark: Cut square on southwest corner of concrete base of traffic control box on northeast corner of IL 59 and Army Trail Rd. Elevation 807.24.

Existing Structure: The existing noise wall structure consists of HP-Piles spaced at 15'-0" with approximately 13'-0" to 18'-0" tall noise panel wall.

Traffic to be maintained utilizing staged construction.

Salvage: Existing noise wall panels shall be removed, modified as required, and installed on proposed noise wall. Existing noise wall panels not re-utilized shall be delivered to the IDOT maintenance yard.

STATE OF ILLINOIS
LICENSED STRUCTURAL ENGINEER
CHICAGO, ILLINOIS

JASON M. SCHNEIDER, S.E., P.E.

EXP. 11/30/2018

CURVE DATA

P.I. Sta. = 501+67.55
Δ = 18° 17' 04" (RT)
D = 1° 05' 16"
R = 5,267.07'
T = 847.63'
L = 1,680.85'
E = 67.77'
e = 2.00%
T.R. = 40'
S.E. Run = 67'
P.C. Sta. = 493+19.92
P.T. Sta. = 510+00.77

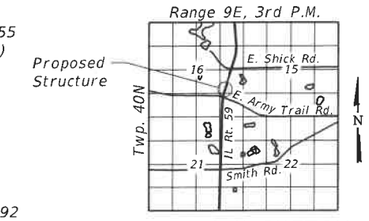

LOCATION SKETCH

DESIGN SPECIFICATIONS

2017 AASHTO LRFD Bridge Design Specifications, 8th Edition

DESIGN STRESSES

FIELD UNITS

f'c = 3,500 psi
fy = 60,000 psi (Reinforcement)

SOLDIER PILES

fy = 50,000 psi (M270 Grade 50)

NOISE WALL DESIGN LOADS

AASHTO LRFD Load Combinations:
Service I Wind Load = 15 psf
Strength III Wind Load = 35 psf
Strength V Wind Load = 20 psf

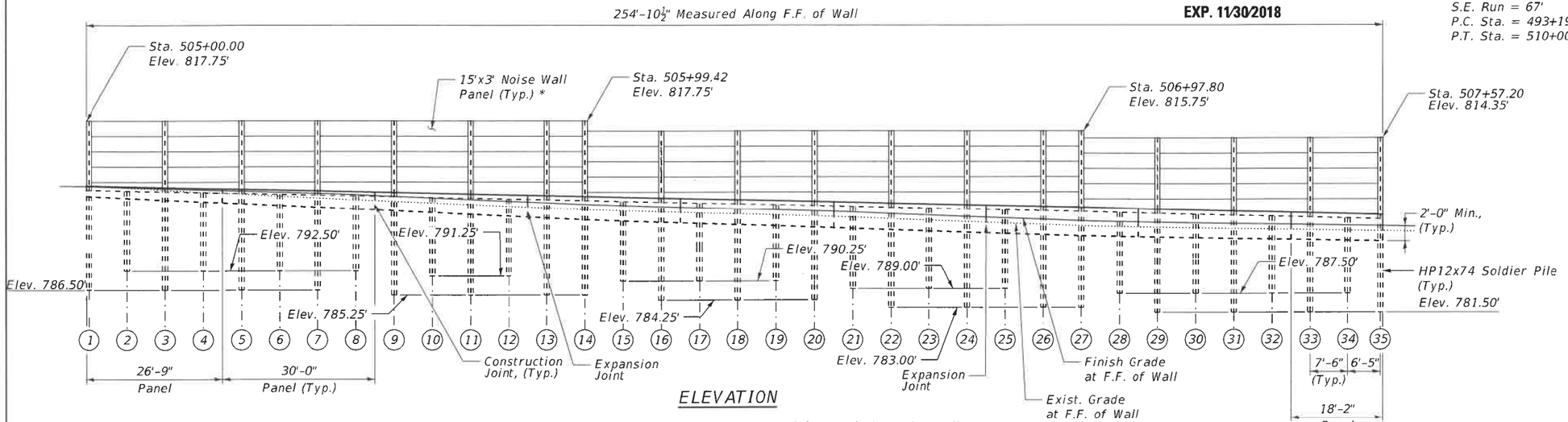

ELEVATION

* Existing noise wall panels shall be removed from existing noise wall, modified as required, and re-installed on proposed retaining/noise wall.

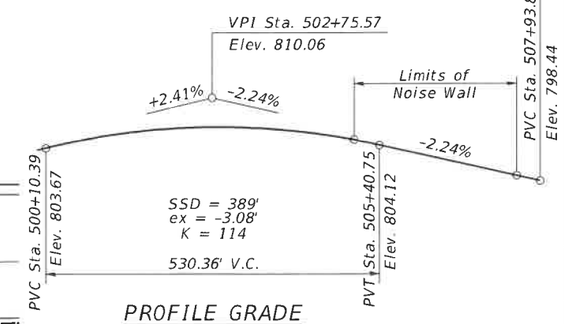

PROFILE GRADE

(Along IL 59 N.B. P.G.L.)

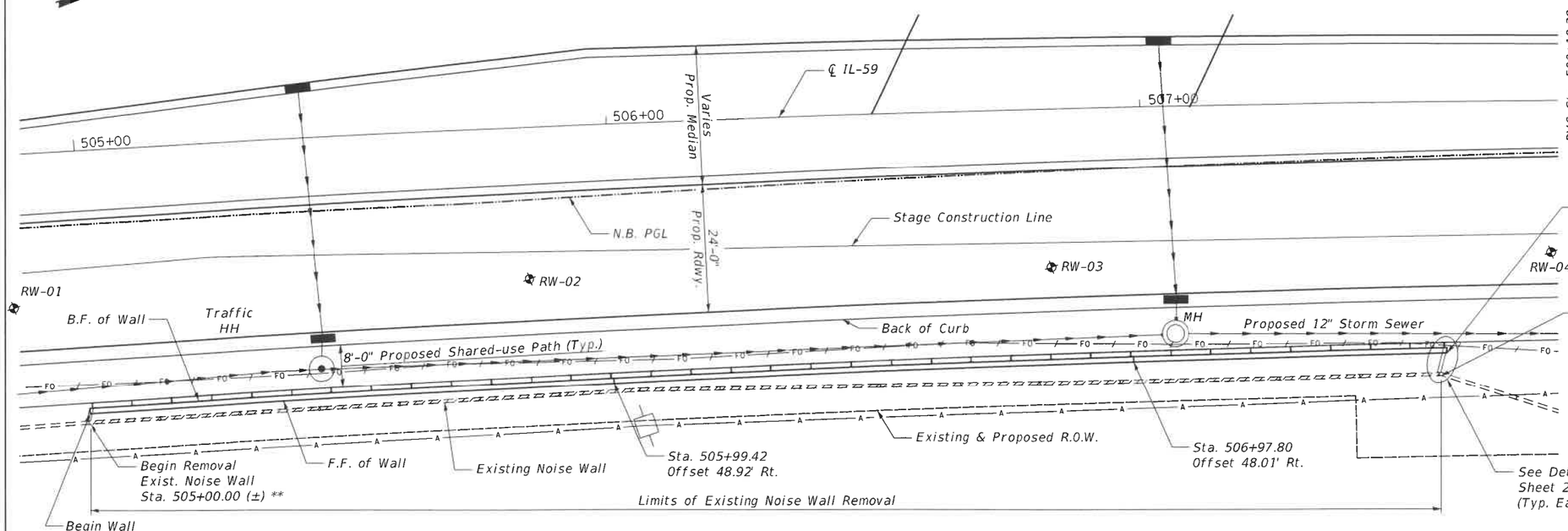

PLAN

** Existing noise wall removal shall extend to first existing noise wall pile beyond limits of proposed retaining/noise wall.

GENERAL PLAN AND ELEVATION
RETAINING AND NOISE WALL ALONG
IL 59 (S. SUTTON RD.)
SECTION 110TS-N
DUPAGE COUNTY
STATION 505+00.00 TO STATION 507+57.20
STRUCTURE NO. 022-2998

FILE NAME =	USER NAME =	DESIGNED - LY	REVISED -	STATE OF ILLINOIS DEPARTMENT OF TRANSPORTATION	GENERAL PLAN AND ELEVATION STRUCTURE NO. 022-2998	F.A.P. RTE.	SECTION	COUNTY	TOTAL SHEETS	SHEET NO.
COLLINS ENGINEERS INC. 123 N. Wacker Dr. Suite 900 Chicago, IL 60606 Tel: (312) 704-9300 Fax: (312) 704-9320 www.collinseng.com ILLINOIS PROFESSIONAL DESIGN FIRM LICENSE NO. 184-000993		CHECKED - JMS	REVISED -			338	110TS-N	DuPAGE	133	88
	PLOT SCALE =	DRAWN - DR	REVISED -					CONTRACT NO. 62F19		
	PLOT DATE =	CHECKED - JMS	REVISED -		SHEET NO. 51 OF 56 SHEETS		ILLINOIS FED. AID PROJECT			

GENERAL NOTES:

1. All structural steel shall be in accordance with AASHTO M270 Grade 50, unless otherwise noted.

2. All H-Piles and structural steel shall be shop painted in accordance with Article 506 of the Standard Specifications utilizing the Organic Zinc-Rich/Epoxy/Urethane paint system. The final finish coat shall match Munsell Glossy 2.5YR Reddish Brown.

3. No field welding is permitted except as specified in the contract documents.

4. Reinforcement bars designated (E) shall be epoxy coated.

5. Plan dimensions and details relative to existing plans are subject to nominal construction variations. The Contractor shall field verify existing dimensions and details affecting new construction and make necessary approved adjustments prior to construction or ordering of materials. Such variations shall not be cause for additional compensation for a change in scope of the work, however, the Contractor will be paid for the quantity actually furnished at the unit price bid for the work.

6. Concrete sealer shall be applied to all exposed surfaces of the wall and shall extend 1'-0" minimum below finished grade.

7. Chamfers on vertical surfaces shall be continued a minimum of 1'-0" below finished ground level.

8. The Contractor is responsible for the design and performance of the lagging using no less than a 3" nominal rough-sawn thickness and timber with an allowable bending stress of 1000 psi.

9. The Contractor shall verify the dimensions of the existing noise wall panels prior to construction and notify the engineer of any discrepancies.

INDEX OF SHEETS

MINIMUM BAR LAPS

#5 Bars - 3'-8"

TOTAL BILL OF MATERIALS

CODE NO.	ITEM	UNIT	TOTAL QUANTITY
20900110	POROUS GRANULAR BACKFILL	CU YD	95
50100100	REMOVAL OF EXISTING STRUCTURES	EA	1
50500505	STUD SHEAR CONNECTORS	EA	146
50800205	REINFORCEMENT BARS, EPOXY COATED	POUND	3590
52200100	FURNISHING SOLDIER PILES (HP SECTION)	FT	807
52200150	DRIVING SOLDIER PILES	FT	807
52200250	UNTREATED TIMBER LAGGING	SQ FT	897
52200900	CONCRETE STRUCTURES (RETAINING WALL)	CU YD	33.3
58700300	CONCRETE SEALER	SQ FT	642
59100100	GEOCOMPOSITE WALL DRAIN	SQ YD	67
Z0046304	PIPE UNDERDRAINS FOR STRUCTURES, 4"	FT	256
	PRECAST NOISE WALL PANEL REMOVAL, MODIFICATION, & RE-INSTALLATION	L. SUM	1

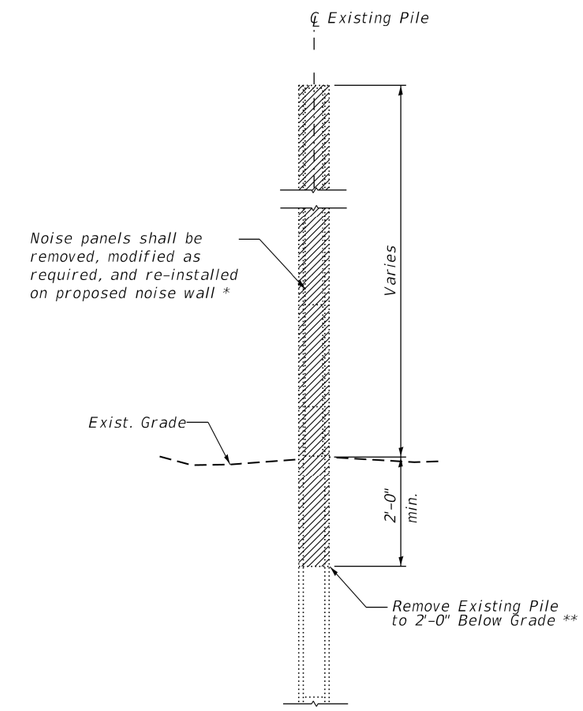

REMOVAL OF EXISTING WALL

* Cost of this work shall be included in the pay item "Precast Noise Wall Panel Removal, Modification, & Re-installation."

** Cost of this work shall be included in the pay item "Removal of Existing Structures."

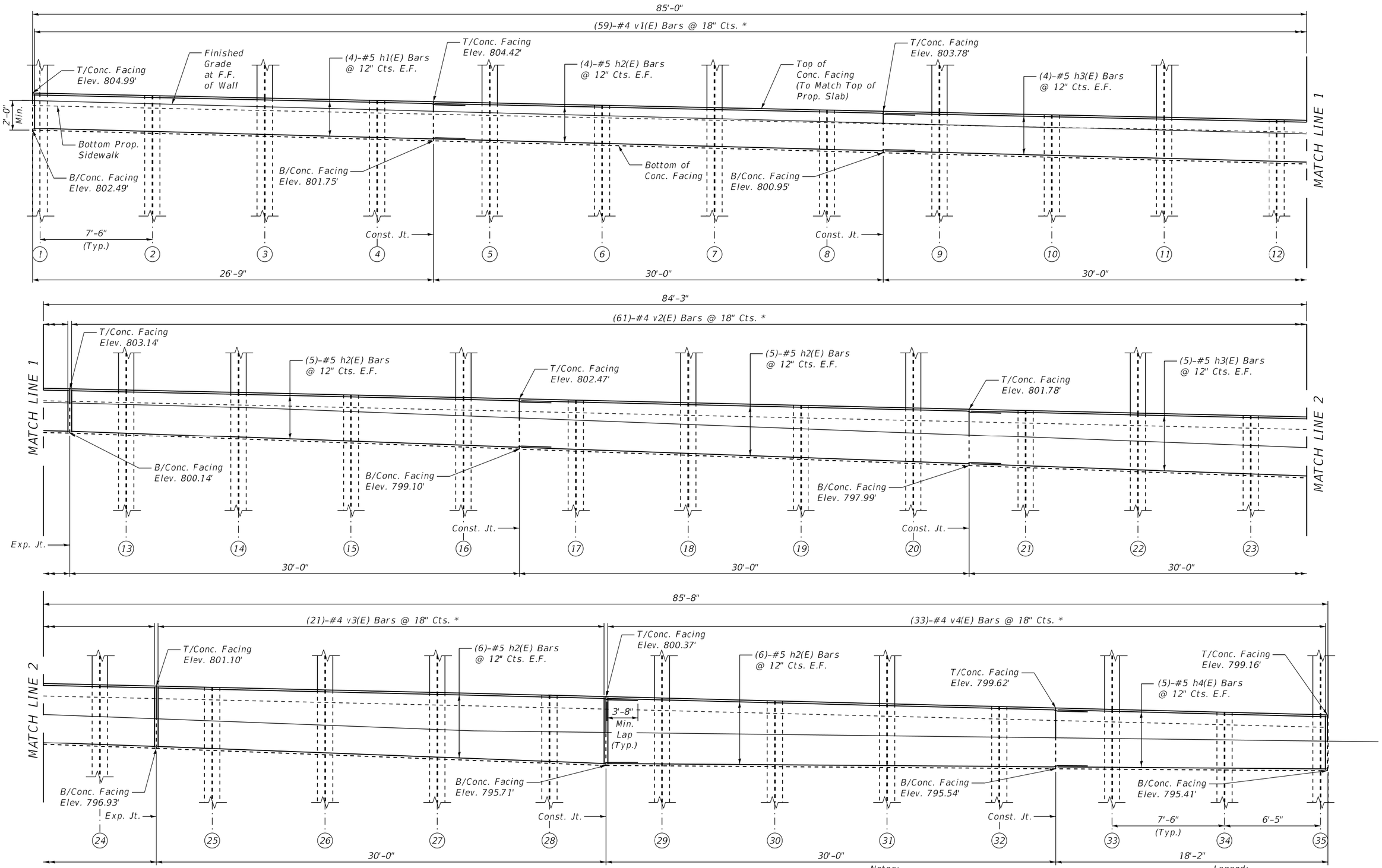

* Cut v1(E), v2(E), v3(E), and v4(E) bars and use remainder at opposite face/end.

ELEVATION (SHOWING REINFORCEMENT)

Notes:
1. Noise wall panels above concrete facing not shown for clarity.
2. See Sheet S5 for pile elevations.

Legend:
F.F. = Front Face
B.F. = Back Face E.F. = Each Face

FILE NAME =	USER NAME =	DESIGNED - LY	REVISED -	STATE OF ILLINOIS DEPARTMENT OF TRANSPORTATION	ENLARGED ELEVATION STRUCTURE NO. 022-2998	F.A.P. RTE.	SECTION	COUNTY	TOTAL SHEETS / SHEET NO.
COLLINS ENGINEERS INC. 123 N. Wacker Dr. Suite 900 Chicago, IL 60606 Tele. (312) 704-9300 Fax. (312) 704-9300 www.collinsengr.com		CHECKED - JMS	REVISED -			338	110TS-N	DuPAGE	133 / 90
ILLINOIS PROFESSIONAL DESIGN FIRM LICENSE NO. 184-000993	PLOT SCALE =	DRAWN - DR	REVISED -			CONTRACT NO. 62F19			
	PLOT DATE =	CHECKED - JMS	REVISED -		SHEET NO. S3 OF S6 SHEETS	ILLINOIS FED. AID PROJECT			

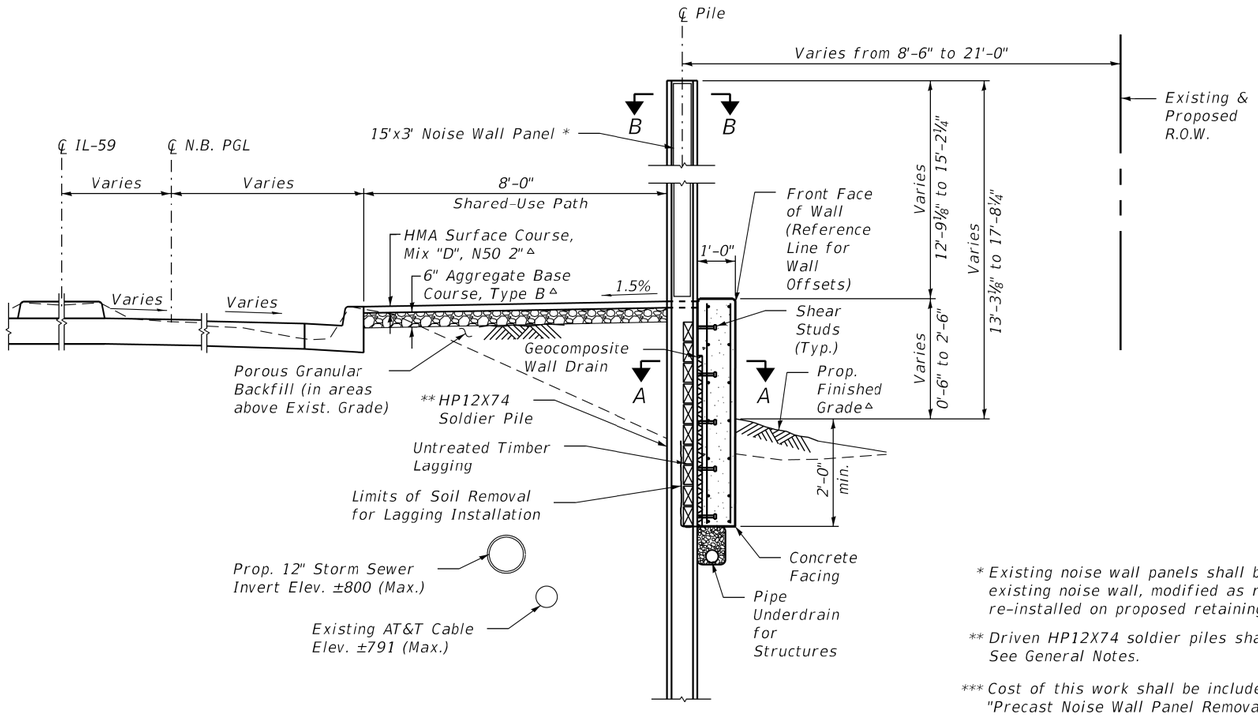

* Existing noise wall panels shall be removed from existing noise wall, modified as required, and re-installed on proposed retaining/noise wall.

** Driven HP12X74 soldier piles shall be painted. See General Notes.

*** Cost of this work shall be included in the pay item "Precast Noise Wall Panel Removal, Modification, & Re-installation."

△ See Civil Drawings.

TYPICAL CROSS SECTION

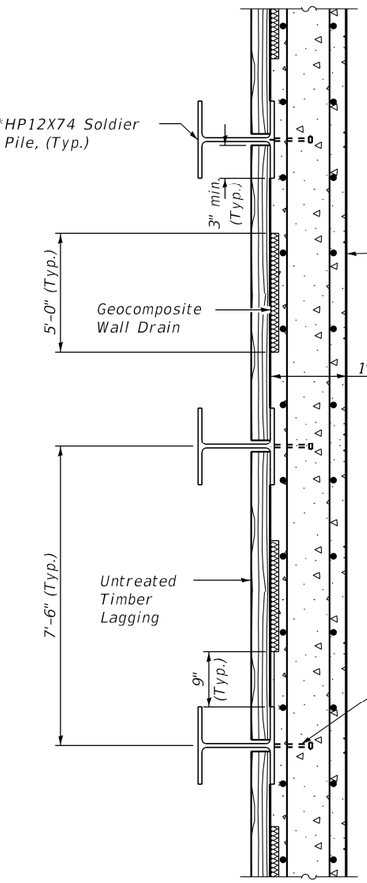

SECTION A-A

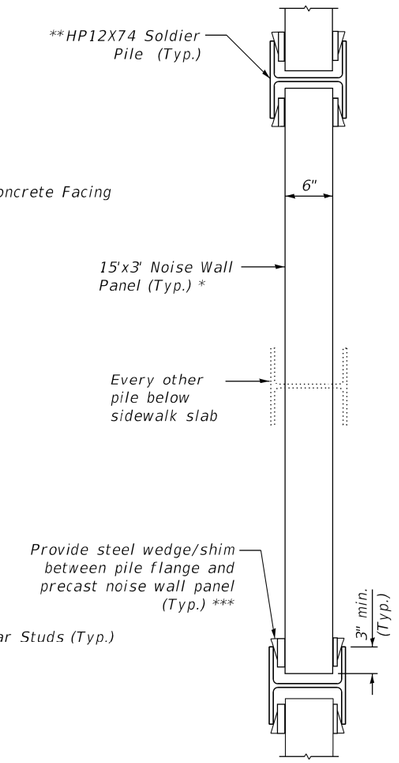

SECTION B-B

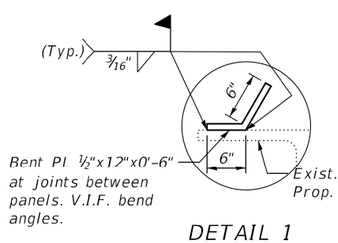

DETAIL 1

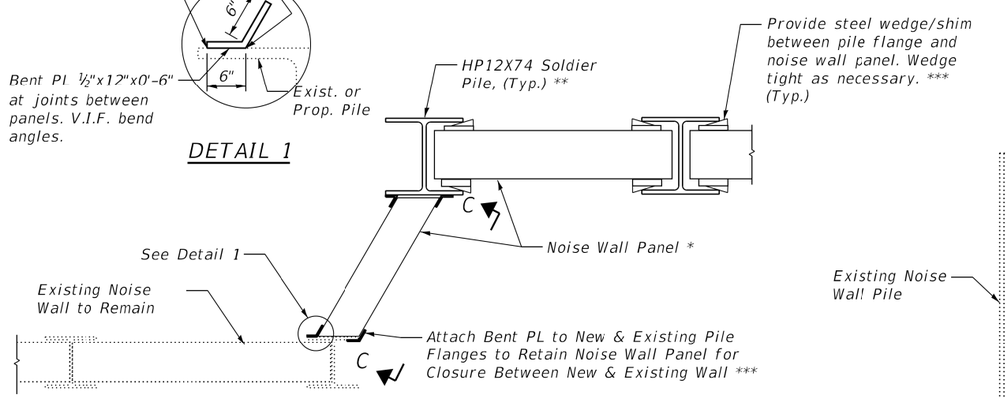

TYPICAL CONNECTION TO EXISTING NOISE WALL

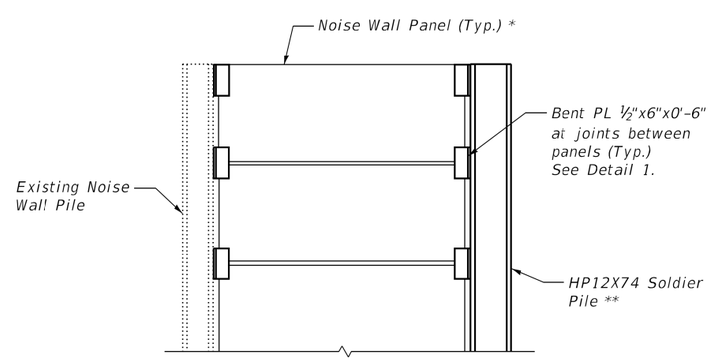

SECTION C-C

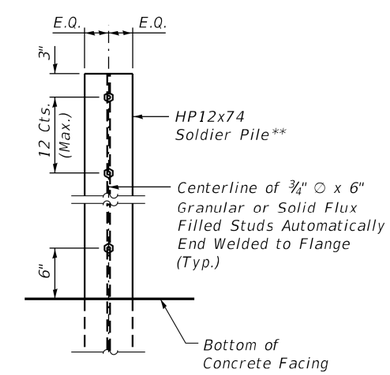

STUD SHEAR CONNECTOR LAYOUT

FILE NAME =	USER NAME =	DESIGNED - LY	REVISED -	STATE OF ILLINOIS DEPARTMENT OF TRANSPORTATION	TYPICAL SECTIONS AND DETAILS STRUCTURE NO. 022-2998	F.A.P. RTE.	SECTION	COUNTY	TOTAL SHEETS / SHEET NO.
COLLINS ENGINEERS 123 N. Wacker Dr. Suite 900 Chicago, IL 60606 Tel. (312) 704-9300 Fax. (312) 704-9300 www.collinseng.com		CHECKED - JMS	REVISED -			338	110TS-N	DuPAGE	133 / 91
ILLINOIS PROFESSIONAL DESIGN FIRM LICENSE NO. 184-000993	PLOT SCALE =	DRAWN - DR	REVISED -					CONTRACT NO. 62F19	
	PLOT DATE =	CHECKED - JMS	REVISED -		SHEET NO. S4 OF S6 SHEETS		ILLINOIS FED. AID PROJECT		

SOLDIER PILE WALL INFORMATION

Pile	Station	Offset (Ft)	Top of Pile Elevation	Bottom of Pile Elevation	Pile Length (Ft)	No. Shear Stud Connectors
1	505+00.50	48.17	817.75	786.50	31.25	3
2	505+08.06	48.12	804.82	792.50	12.32	3
3	505+15.63	48.06	817.75	786.50	31.25	3
4	505+23.19	48.01	804.50	792.50	12.00	3
5	505+30.75	47.96	817.75	786.50	31.25	3
6	505+38.31	47.90	804.18	792.50	11.68	3
7	505+45.88	47.85	817.75	786.50	31.25	3
8	505+53.44	47.79	803.86	792.50	11.36	3
9	505+61.00	47.73	817.75	785.25	32.50	4
10	505+68.57	47.67	803.54	791.25	12.29	4
11	505+76.13	47.61	817.75	785.25	32.50	4
12	505+83.69	47.55	803.22	791.25	11.97	4
13	505+91.25	47.49	817.75	785.25	32.50	4
14	505+98.82	47.42	817.75	785.25	32.50	4
15	506+06.38	47.36	802.73	790.25	12.48	4
16	506+13.94	47.30	815.75	784.25	31.50	4
17	506+21.50	47.23	802.39	790.25	12.14	4
18	506+29.06	47.16	815.75	784.25	31.50	4
19	506+36.63	47.09	802.04	790.25	11.79	4
20	506+44.19	47.02	815.75	784.25	31.50	4
21	506+51.75	46.95	801.70	789.00	12.70	5
22	506+59.31	46.88	815.75	783.00	32.75	5
23	506+66.87	46.81	801.36	789.00	12.36	5
24	506+74.43	46.74	815.75	783.00	32.75	5
25	506+81.99	46.66	801.01	789.00	12.01	5
26	506+89.56	46.59	815.75	783.00	32.75	5
27	506+97.12	46.51	815.75	783.00	32.75	5
28	507+04.68	46.43	800.49	787.50	12.99	5
29	507+12.24	46.35	814.35	781.50	32.85	5
30	507+19.80	46.28	800.11	787.50	12.61	5
31	507+27.36	46.19	814.35	781.50	32.85	5
32	507+34.92	46.11	799.74	787.50	12.24	5
33	507+42.48	46.03	814.35	781.50	32.85	5
34	507+50.04	45.95	799.36	787.50	11.86	5
35	507+56.73	45.87	814.35	781.50	32.85	4

Note: Offsets measured to center of pile.

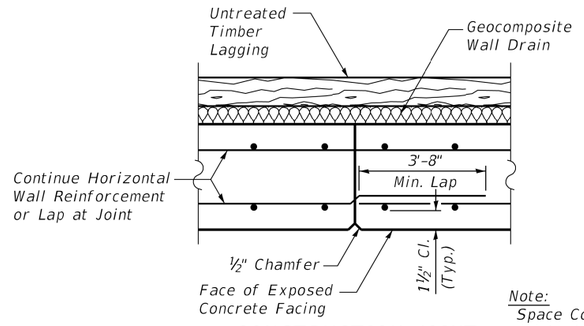

CONSTRUCTION JOINT

Note:
Space Construction and Expansion Joints As-Shown on Elevation.

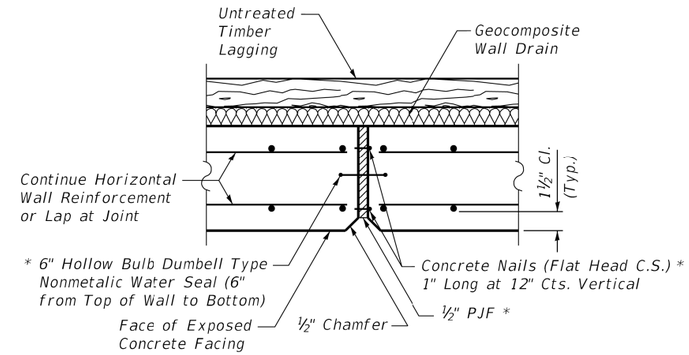

EXPANSION JOINT

* Cost Included in Pay Item for Concrete Structures.

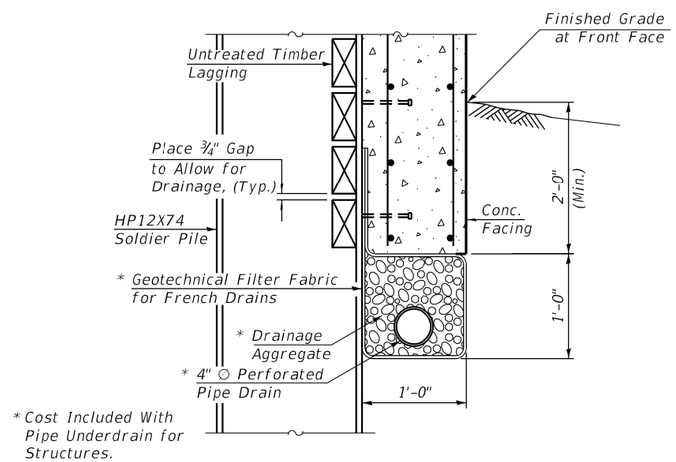

PIPE UNDERDRAIN DETAIL AT SOLDIER PILES

CONCRETE FASCIA BILL OF MATERIAL

Bar	No.	Size	Length	Shape
$v_1(E)$	59	#4	5'-0"	
$v_2(E)$	61	#4	6'-8"	
$v_3(E)$	21	#4	8'-4"	
$v_4(E)$	33	#4	7'-11"	
$h_1(E)$	8	#5	30'-5"	
$h_2(E)$	52	#5	33'-8"	
$h_3(E)$	18	#5	29'-9"	
$h_4(E)$	10	#5	17'-11"	
Concrete Structures (Retaining Wall)			Cu. Yd.	33.3
Reinforcement Bars, Epoxy Coated			Pound	3590

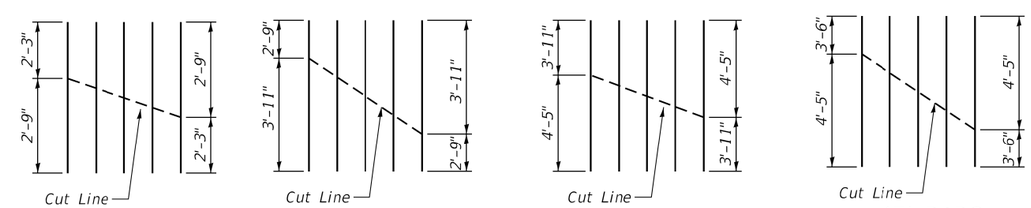

$v_1(E)$ BARS $v_2(E)$ BARS $v_3(E)$ BARS $v_4(E)$ BARS

Note: Cut v(E) bars and use remainder on opposite face/end of concrete fascia.

BORING LOG RW-01

Page 1 of 1

Wang Engineering
wangeng@wangeng.com
1145 N Main Street
Lombard, IL 60148
Telephone: (630) 953-9928
Fax:

WEI Job No.: 486-23-03
Client: Collins Engineers, Inc.
Project: IL Route 59 Retaining Wall
Location: Bartlett, Illinois

Datum: NGVD
Elevation: 805.45 ft
North: 1923694.30 ft
East: 1018459.35 ft
Station:
Offset:

Elevation (ft)	Soil and Rock Description	Sample Type	Sample No.	SPT Values (blw/6 in)	Qu (tsf)	Moisture Content (%)
804.6	10-inch thick, CONCRETE --PAVEMENT--					
803.5	9-inch thick, loose, brown SANDY GRAVEL --BASE COURSE--					
	Stiff to hard, brown SILTY CLAY, trace gravel; damp --RDR 2--		1	5 5 3	NP	7
			2	11 9 11	NR	
			3	9 12 12	1.00 P	18
			4	7 11 14	5.33 B	17
			5	6 8 8	5.49 B	19
790.4	Medium dense, yellowish brown, very fine SAND; moist --RDR 2--		6	7 7 6	NP	4
			7	8 14 9	NP	10
785.4			8	7 10 11	NP	13
	Boring terminated at 20.00 ft					

GENERAL NOTES

Begin Drilling: 11-28-2017 Complete Drilling: 11-28-2017
Drilling Contractor: Wang Testing Services Drill Rig: D50 TMR [78%]
Driller: K&N Logger: RKC Checked by: M. Snider
Drilling Method: 2.25 IDA HSA; 140 lb autohammer; Boring backfilled upon completion

WATER LEVEL DATA

While Drilling: 15.50 ft
At Completion of Drilling: DRY
Time After Drilling: NA
Depth to Water: NA
The stratification lines represent the approximate boundary between soil types; the actual transition may be gradual.

BORING LOG RW-02

Page 1 of 1

Wang Engineering
wangeng@wangeng.com
1145 N Main Street
Lombard, IL 60148
Telephone: (630) 953-9928
Fax:

WEI Job No.: 486-23-03
Client: Collins Engineers, Inc.
Project: IL Route 59 Retaining Wall
Location: Bartlett, Illinois

Datum: NGVD
Elevation: 802.99 ft
North: 1923787.83 ft
East: 1018484.30 ft
Station:
Offset:

Elevation (ft)	Soil and Rock Description	Sample Type	Sample No.	SPT Values (blw/6 in)	Qu (tsf)	Moisture Content (%)
802.2	10-inch thick, CONCRETE --PAVEMENT--					
801.5	8-inch thick, medium dense, brown GRAVELLY SAND --BASE COURSE--					
	Stiff to hard, brown and gray SILTY CLAY to SILTY CLAY LOAM, trace gravel; damp --RDR 2--		1	9 10 10	NP	7
			2	6 5 8	3.53 S	15
			3	6 12 11	4.53 P	16
			4	6 10 12	6.23 B	17
			5	7 8 11	5.17 B	16
			6	6 10 12	1.59 P	19
787.5	Dense, brown GRAVELLY SAND; moist --RDR 3--		7	15 18 21	NP	11
785.0	Dense, yellowish brown, very fine SAND; damp --RDR 2--		8	11 19 25	NP	6
783.0	Boring terminated at 20.00 ft					

GENERAL NOTES

Begin Drilling: 11-28-2017 Complete Drilling: 11-28-2017
Drilling Contractor: Wang Testing Services Drill Rig: D50 TMR [78%]
Driller: K&N Logger: RKC Checked by: M. Snider
Drilling Method: 2.25 IDA HSA; 140 lb autohammer; Boring backfilled upon completion

WATER LEVEL DATA

While Drilling: 15.50 ft
At Completion of Drilling: DRY
Time After Drilling: NA
Depth to Water: NA
The stratification lines represent the approximate boundary between soil types; the actual transition may be gradual.

BORING LOG RW-03

Page 1 of 1

Wang Engineering
wangeng@wangeng.com
1145 N Main Street
Lombard, IL 60148
Telephone: (630) 953-9928
Fax:

WEI Job No.: 486-23-03
Client: Collins Engineers, Inc.
Project: IL Route 59 Retaining Wall
Location: Bartlett, Illinois

Datum: NGVD
Elevation: 801.01 ft
North: 1923881.50 ft
East: 1018512.82 ft
Station:
Offset:

Elevation (ft)	Soil and Rock Description	Sample Type	Sample No.	SPT Values (blw/6 in)	Qu (tsf)	Moisture Content (%)
800.2	9.5-inch thick, CONCRETE --PAVEMENT--					
799.5	8.5-inch thick, medium dense, brown SANDY GRAVEL; moist --BASE COURSE--		1	6 10 6	NP	7
	Hard, brown SILTY CLAY LOAM; damp --FILL--		2	6 3 3	4.00 P	12
796.8	Stiff (1.5P), black SILTY CLAY, some organic --BURIED TOPSOIL--		3	4 5 6	4.92 B	19
795.5	Very stiff to hard, brown to gray SILTY CLAY to SILTY CLAY LOAM, trace gravel; damp --RDR 2--		4	7 9 19	7.38 B	17
			5	16 8 9	3.28 B	20
			6	6 12 7	6.23 B	19
			7	5 10 8	4.50 P	19
783.0	Dense, brown to gray SANDY GRAVEL; moist --RDR 3--		8	12 17 23	NP	9
781.0	Boring terminated at 20.00 ft					

GENERAL NOTES

Begin Drilling: 11-28-2017 Complete Drilling: 11-28-2017
Drilling Contractor: Wang Testing Services Drill Rig: D50 TMR [78%]
Driller: K&N Logger: RKC Checked by: M. Snider
Drilling Method: 2.25 IDA HSA; 140 lb autohammer; Boring backfilled upon completion

WATER LEVEL DATA

While Drilling: 18.00 ft
At Completion of Drilling: DRY
Time After Drilling: NA
Depth to Water: NA
The stratification lines represent the approximate boundary between soil types; the actual transition may be gradual.

BORING LOG RW-04

Page 1 of 1

Wang Engineering
wangeng@wangeng.com
1145 N Main Street
Lombard, IL 60148
Telephone: (630) 953-9928
Fax:

WEI Job No.: 486-23-03
Client: Collins Engineers, Inc.
Project: IL Route 59 Retaining Wall
Location: Bartlett, Illinois

Datum: NGVD
Elevation: 798.65 ft
North: 1923971.38 ft
East: 1018539.49 ft
Station:
Offset:

Elevation (ft)	Soil and Rock Description	Sample Type	Sample No.	SPT Values (blw/6 in)	Qu (tsf)	Moisture Content (%)
797.8	10-inch thick, CONCRETE --PAVEMENT--					
796.5	13-inch thick, medium dense, brown and gray SANDY GRAVEL --BASE COURSE--		1	20 15 6	NP	7
	Stiff to hard, greenish brown to brown SILTY CLAY to SILTY CLAY LOAM, trace to little gravel; damp to moist --RDR 2--		2	7 4 4	NR	
	--L_L = 55%, P_L = 21%-- --% Gravel = 0.3-- --% Sand = 7.6-- --% Silt = 56.8-- --% Clay = 35.3--		3	4 4 4	1.80 B	28
			4	8 8 8	6.64 B	16
			5	6 6 10	5.00 B	18
			6	5 6 9	4.43 B	22
			7	6 9 12	8.28 B	16
			8	8 8 13	3.61 B	21
778.6	Boring terminated at 20.00 ft					

GENERAL NOTES

Begin Drilling: 11-28-2017 Complete Drilling: 11-28-2017
Drilling Contractor: Wang Testing Services Drill Rig: D50 TMR [78%]
Driller: K&N Logger: RKC Checked by: M. Snider
Drilling Method: 2.25 IDA HSA; 140 lb autohammer; Boring backfilled upon completion

WATER LEVEL DATA

While Drilling: DRY
At Completion of Drilling: DRY
Time After Drilling: NA
Depth to Water: NA
The stratification lines represent the approximate boundary between soil types; the actual transition may be gradual.

Bench Mark: Cut square on southwest corner of concrete base of traffic control box on northeast corner of IL 59 and Army Trail Rd. Elevation 807.24.

Existing Structure: The existing noise wall structure consists of HP-Piles spaced at 15'-0" with approximately 13'-0" to 18'-0" tall noise panel wall.

Traffic to be maintained utilizing staged construction.

Salvage: Existing noise wall panels shall be removed, modified as required, and installed on proposed noise wall. Existing noise wall panels not re-utilized shall be delivered to the IDOT maintenance yard.

STATE OF ILLINOIS
JASON M. SCHNEIDER
LICENSED STRUCTURAL ENGINEER
9/30/18
CHICAGO, ILLINOIS

JASON M. SCHNEIDER, S.E., P.E.

EXP. 11/30/2018

CURVE DATA

P.I. Sta. = 501+67.55
Δ = 18° 17' 04" (RT)
D = 1° 05' 16"
R = 5,267.07'
T = 847.63'
L = 1,680.85'
E = 67.77'
e = 2.00%
T.R. = 40'
S.E. Run = 67'
P.C. Sta. = 493+19.92
P.T. Sta. = 510+00.77

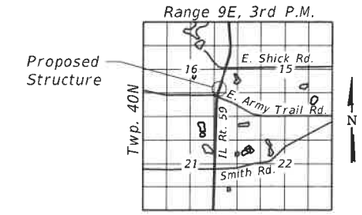

LOCATION SKETCH

DESIGN SPECIFICATIONS

2017 AASHTO LRFD Bridge Design Specifications, 8th Edition

DESIGN STRESSES

FIELD UNITS

f'c = 3,500 psi
fy = 60,000 psi (Reinforcement)

SOLDIER PILES

fy = 50,000 psi (M270 Grade 50)

NOISE WALL DESIGN LOADS

AASHTO LRFD Load Combinations:
Service I Wind Load = 15 psf
Strength III Wind Load = 35 psf
Strength V Wind Load = 20 psf

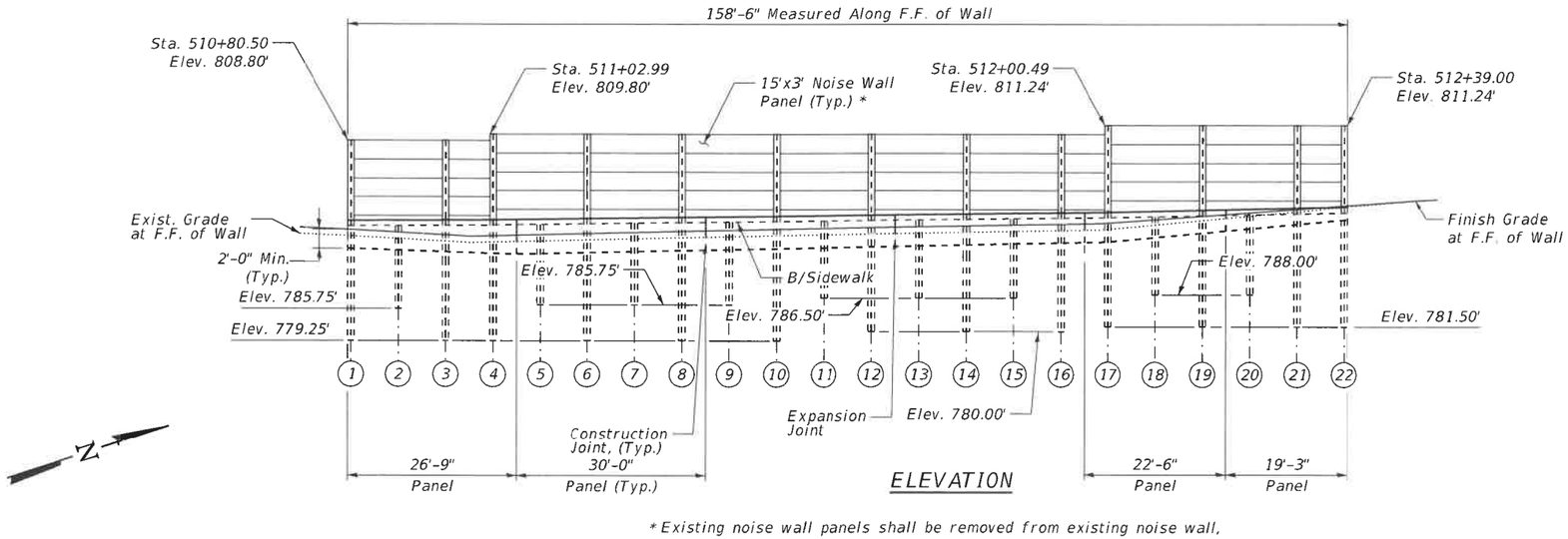

ELEVATION

* Existing noise wall panels shall be removed from existing noise wall, modified as required, and re-installed on proposed retaining/noise wall.

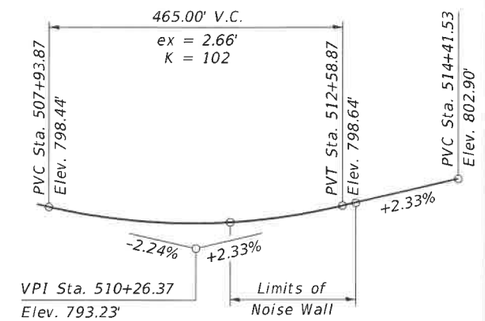

PROFILE GRADE

(Along IL 59 N.B. P.G.L.)

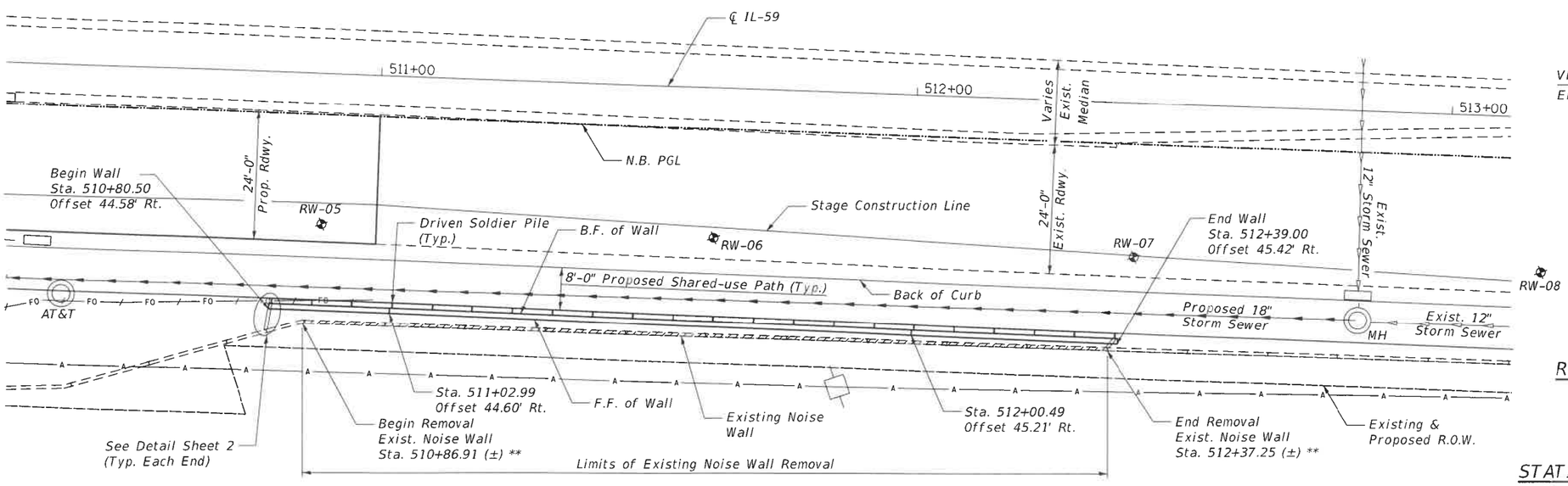

PLAN

** Existing noise wall removal shall extend to first existing noise wall pile beyond limits of proposed retaining/noise wall.

GENERAL PLAN AND ELEVATION
RETAINING AND NOISE WALL ALONG
IL 59 (S. SUTTON RD.)
SECTION 110TS-N
DUPAGE COUNTY
STATION 510+80.50 TO STATION 512+39.00
STRUCTURE NO. 022-2999

FILE NAME =	USER NAME =	DESIGNED - LY	REVISED -	STATE OF ILLINOIS DEPARTMENT OF TRANSPORTATION	GENERAL PLAN AND ELEVATION STRUCTURE NO. 022-2999	F.A.P. RTE.	SECTION	COUNTY	TOTAL SHEETS / SHEET NO.
COLLINS ENGINEERS 123 N. Wacker Dr. Suite 900 Chicago, IL 60606 Tel: (312) 704-1300 Fax: (312) 704-1320 www.collinseng.com		CHECKED - JMS	REVISED -			338	110TS-N	DuPAGE	133 / 94
ILLINOIS PROFESSIONAL DESIGN FIRM LICENSE NO. 184-000993	PLOT SCALE =	DRAWN - DR	REVISED -		SHEET NO. 51 OF 56 SHEETS			CONTRACT NO. 62F19	
	PLOT DATE =	CHECKED - JMS	REVISED -				ILLINOIS FED. AID PROJECT		

GENERAL NOTES:

1. All structural steel shall be in accordance with AASHTO M270 Grade 50, unless otherwise noted.

2. All H-Piles and structural steel shall be shop painted in accordance with Article 506 of the Standard Specifications utilizing the Organic Zinc-Rich/Epoxy/Urethane paint system. The final finish coat shall match Munsell Glossy 2.5YR Reddish Brown.

3. No field welding is permitted except as specified in the contract documents.

4. Reinforcement bars designated (E) shall be epoxy coated.

5. Plan dimensions and details relative to existing plans are subject to nominal construction variations. The Contractor shall field verify existing dimensions and details affecting new construction and make necessary approved adjustments prior to construction or ordering of materials. Such variations shall not be cause for additional compensation for a change in scope of the work, however, the Contractor will be paid for the quantity actually furnished at the unit price bid for the work.

6. Concrete sealer shall be applied to all exposed surfaces of the wall and shall extend 1'-0" minimum below finished grade.

7. Chamfers on vertical surfaces shall be continued a minimum of 1'-0" below finished ground level.

8. The Contractor is responsible for the design and performance of the lagging using no less than a 3" nominal rough-sawn thickness and timber with an allowable bending stress of 1000 psi.

9. The Contractor shall verify the dimensions of the existing noise wall panels prior to construction and notify the engineer of any discrepancies.

INDEX OF SHEETS

MINIMUM BAR LAPS

#5 Bars - 3'-8"

TOTAL BILL OF MATERIALS

CODE NO.	ITEM	UNIT	TOTAL QUANTITY
20900110	POROUS GRANULAR BACKFILL	CU YD	47
50100100	REMOVAL OF EXISTING STRUCTURES	EA	1
50500505	STUD SHEAR CONNECTORS	EA	89
50800205	REINFORCEMENT BARS, EPOXY COATED	POUND	2310
52200100	FURNISHING SOLDIER PILES (HP SECTION)	FT	483
52200150	DRIVING SOLDIER PILES	FT	483
52200250	UNTREATED TIMBER LAGGING	SQ FT	537
52200900	CONCRETE STRUCTURES (RETAINING WALL)	CU YD	19.9
58700300	CONCRETE SEALER	SQ FT	378
59100100	GEOCOMPOSITE WALL DRAIN	SQ YD	40
Z0046304	PIPE UNDERDRAINS FOR STRUCTURES, 4"	FT	159
	PRECAST NOISE WALL PANEL REMOVAL, MODIFICATION, & RE-INSTALLATION	L. SUM	1

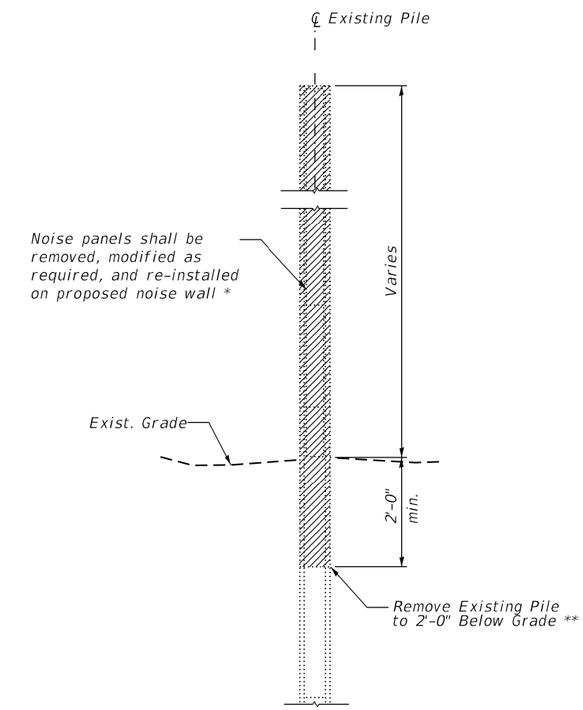

REMOVAL OF EXISTING WALL

* Cost of this work shall be included in the pay item "Precast Noise Wall Panel Removal, Modification, & Re-installation."

** Cost of this work shall be included in the pay item "Removal of Existing Structures."

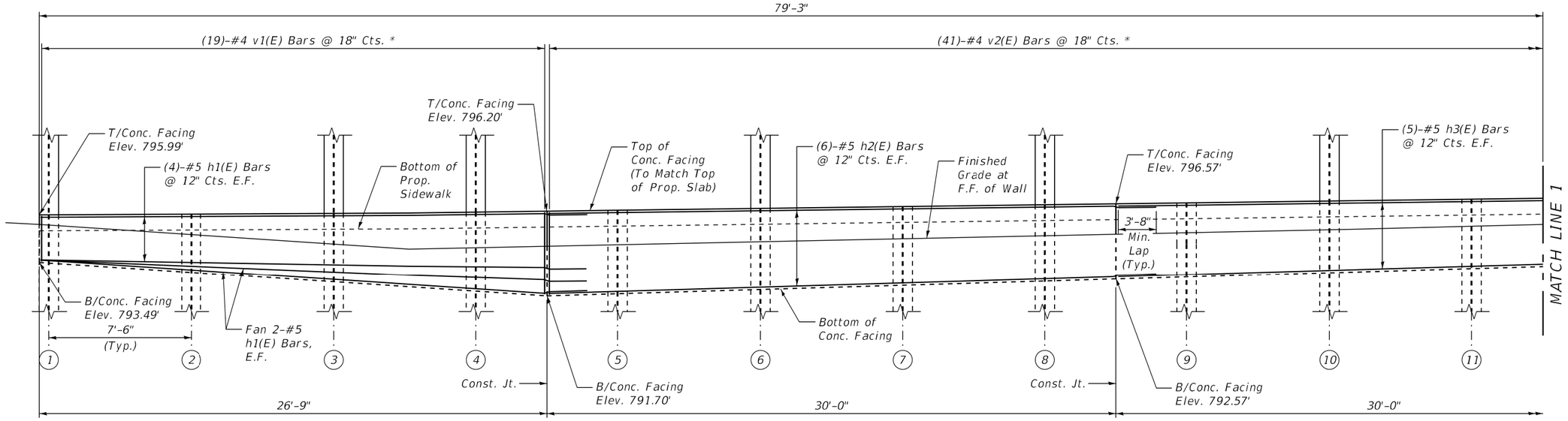

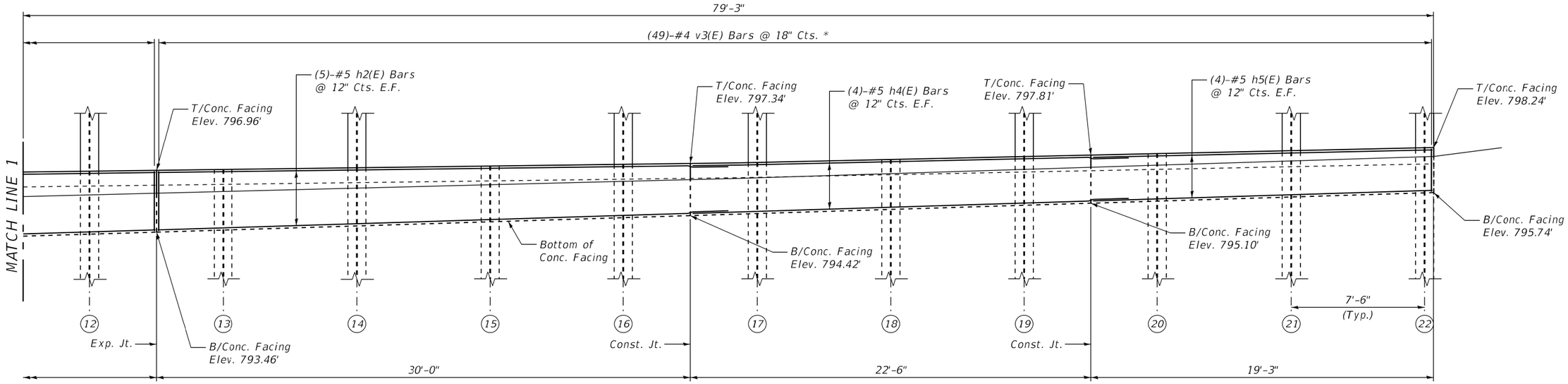

* Cut v1(E), v2(E), and v3(E) bars and use remainder at opposite face/end.

ELEVATION (SHOWING REINFORCEMENT)

Notes:
1. Noise wall panels above concrete facing not shown for clarity.
2. See Sheet S5 for pile elevations.

Legend:
F.F. = Front Face
B.F. = Back Face
E.F. = Each Face

FILE NAME =	USER NAME =	DESIGNED - LY	REVISED -	STATE OF ILLINOIS DEPARTMENT OF TRANSPORTATION	ENLARGED ELEVATION STRUCTURE NO. 022-2999	F.A.P. RTE.	SECTION	COUNTY	TOTAL SHEETS	SHEET NO.
COLLINS ENGINEERS 123 N. Wacker Dr. Suite 900 Chicago, IL 60606 Tele. (312) 704-9300 Fax: (312) 704-9320 www.collinsengr.com		CHECKED - JMS	REVISED -			338	110TS-N	DuPAGE	133	96
ILLINOIS PROFESSIONAL DESIGN FIRM LICENSE NO. 184-000993	PLOT SCALE =	DRAWN - DR	REVISED -					CONTRACT NO. 62F19		
	PLOT DATE =	CHECKED - JMS	REVISED -		SHEET NO. S3 OF S6 SHEETS		ILLINOIS	FED. AID PROJECT		

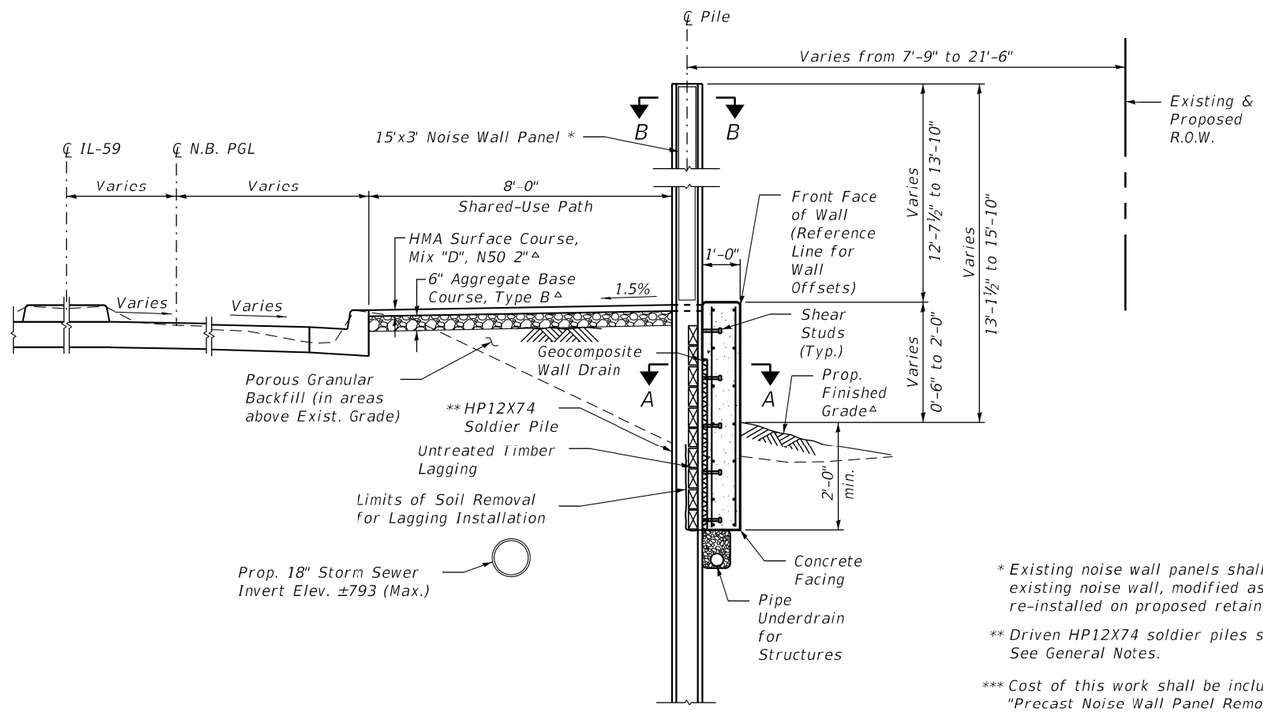

TYPICAL CROSS SECTION

* Existing noise wall panels shall be removed from existing noise wall, modified as required, and re-installed on proposed retaining/noise wall.

** Driven HP12X74 soldier piles shall be painted. See General Notes.

*** Cost of this work shall be included in the pay item "Precast Noise Wall Panel Removal, Modification, & Re-installation."

△ See Civil Drawings.

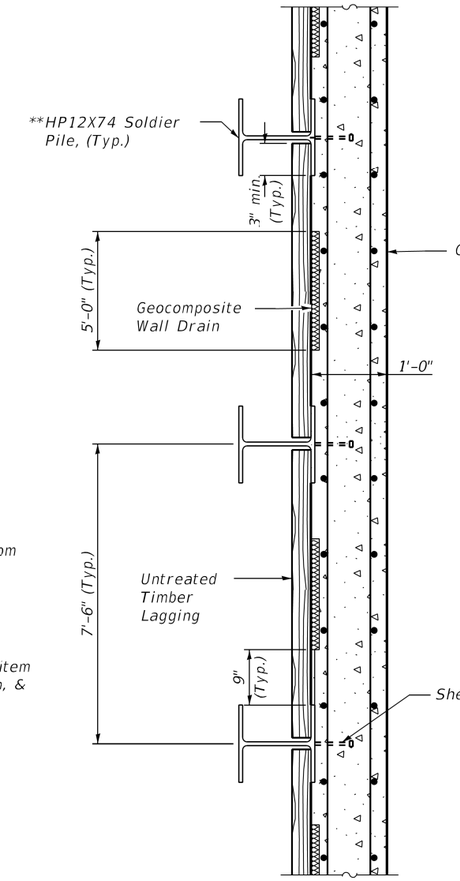

SECTION A-A

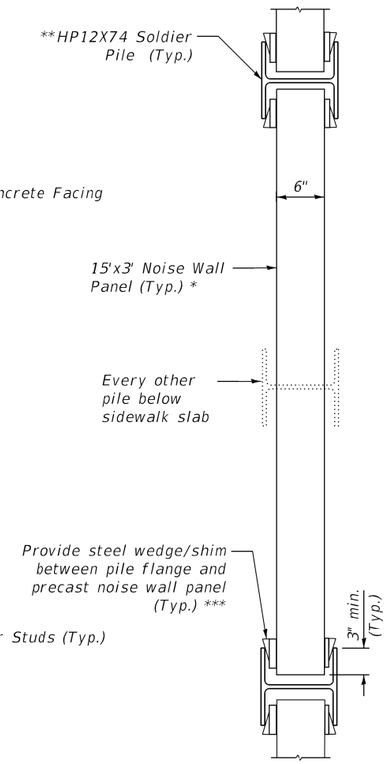

SECTION B-B

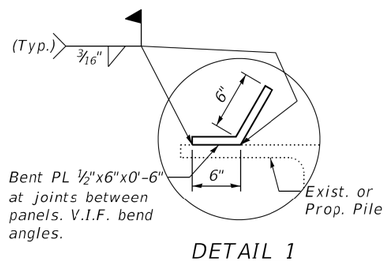

DETAIL 1

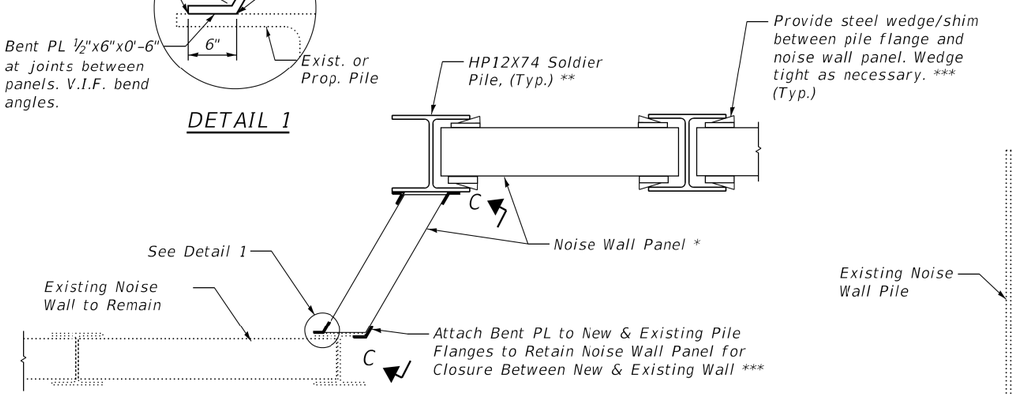

TYPICAL CONNECTION TO EXISTING NOISE WALL

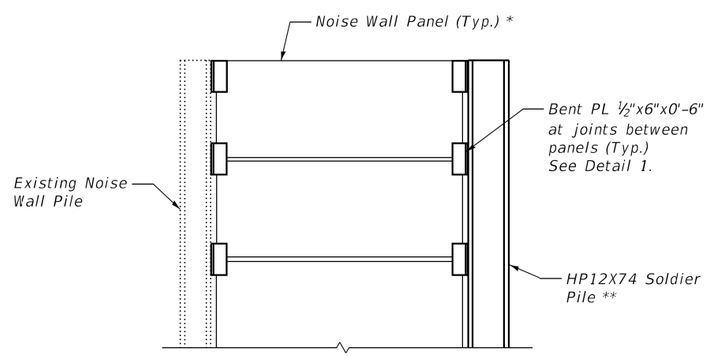

SECTION C-C

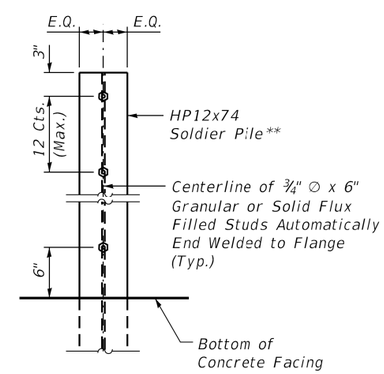

STUD SHEAR CONNECTOR LAYOUT

FILE NAME =	USER NAME =	DESIGNED - LY	REVISED -	STATE OF ILLINOIS DEPARTMENT OF TRANSPORTATION	TYPICAL SECTIONS AND DETAILS STRUCTURE NO. 022-2999	F.A.P. RTE.	SECTION	COUNTY	TOTAL SHEETS	SHEET NO.
COLLINS ENGINEERS INC. 123 N. Wacker Dr. Suite 900 Chicago, IL 60606 Tele. (312) 704-9300 Fax. (312) 704-9320 www.collinseng.com		CHECKED - JMS	REVISED -			338	110TS-N	DuPAGE	133	97
ILLINOIS PROFESSIONAL DESIGN FIRM LICENSE NO. 184-000993	PLOT SCALE =	DRAWN - DR	REVISED -					CONTRACT NO. 62F19		
	PLOT DATE =	CHECKED - JMS	REVISED -		SHEET NO. S4 OF S6 SHEETS		ILLINOIS	FED. AID PROJECT		

SOLDIER PILE WALL INFORMATION

Pile	Station	Offset (Ft)	Top of Pile Elevation	Bottom of Pile Elevation	Pile Length (Ft)	No. Shear Stud Connectors
1	510+81.00	43.07	808.80	779.25	29.55	3
2	510+88.50	43.08	796.03	785.75	10.28	4
3	510+96.00	43.09	808.80	779.25	29.55	4
4	511+03.50	43.10	809.80	779.25	30.55	5
5	511+11.00	43.13	796.23	785.75	10.48	5
6	511+18.50	43.18	809.80	779.25	30.55	5
7	511+26.00	43.22	796.43	785.75	10.68	5
8	511+33.50	43.27	809.80	779.25	30.55	5
9	511+41.00	43.32	796.62	785.75	10.87	5
10	511+48.50	43.37	809.80	779.25	30.55	4
11	511+56.00	43.42	796.81	786.50	10.31	4
12	511+63.50	43.47	809.80	780.00	29.80	4
13	511+71.00	43.52	797.01	786.50	10.51	4
14	511+78.50	43.56	809.80	780.00	29.80	4
15	511+86.00	43.61	797.20	786.50	10.70	4
16	511+93.50	43.66	809.80	780.00	29.80	4
17	512+01.00	43.71	811.24	781.50	29.74	4
18	512+08.50	43.76	797.55	788.00	9.55	4
19	512+16.00	43.80	811.24	781.50	29.74	3
20	512+23.50	43.83	797.85	788.00	9.85	3
21	512+31.00	43.87	811.24	781.50	29.74	3
22	512+38.50	43.91	811.24	781.50	29.74	3

Note: Offsets measured to center of pile.

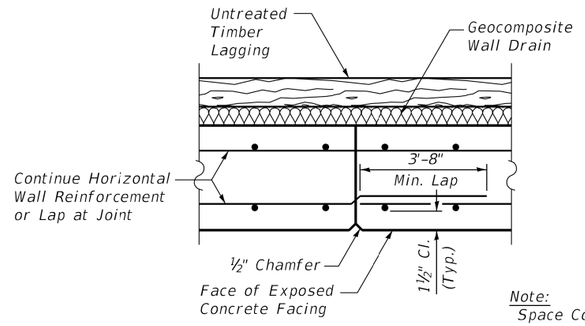

CONSTRUCTION JOINT

Note:
Space Construction and Expansion Joints As-Shown on Elevation.

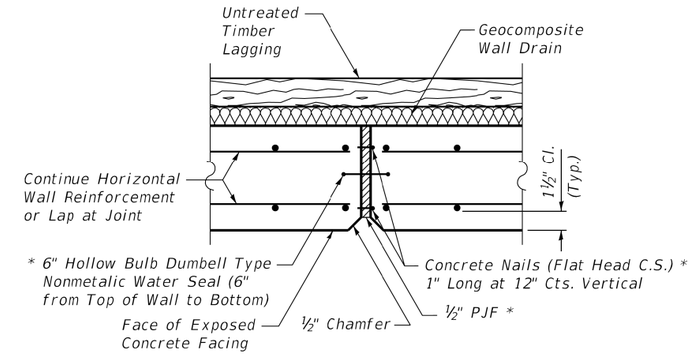

EXPANSION JOINT

* Cost Included in Pay Item for Concrete Structures.

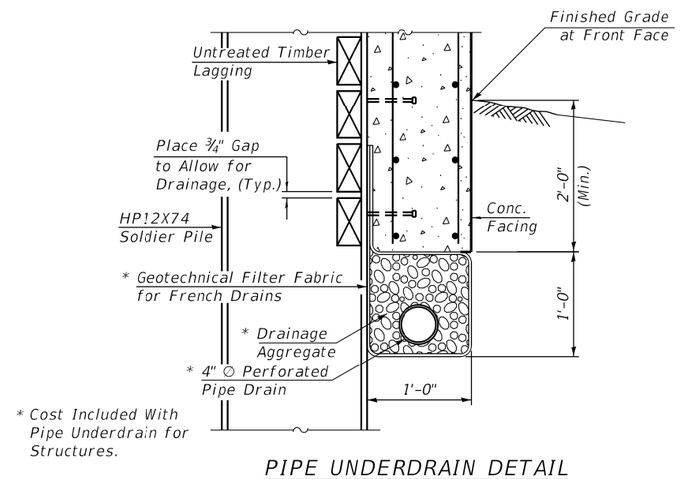

PIPE UNDERDRAIN DETAIL AT SOLDIER PILES

CONCRETE FASCIA BILL OF MATERIAL

Bar	No.	Size	Length	Shape
$v_1(E)$	19	#4	6'-6"	
$v_2(E)$	41	#4	7'-6"	
$v_3(E)$	49	#4	5'-6"	
$h_1(E)$	12	#5	30'-5"	
$h_2(E)$	22	#5	33'-8"	
$h_3(E)$	10	#5	29'-9"	
$h_4(E)$	8	#5	26'-2"	
$h_5(E)$	8	#5	19'-0"	
Concrete Structures (Retaining Wall)			Cu. Yd.	19.9
Reinforcement Bars, Epoxy Coated			Pound	2310

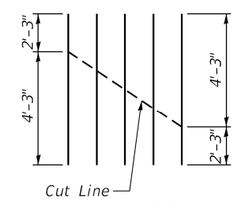

$v_1(E)$ BARS

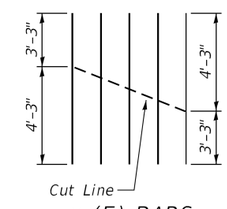

$v_2(E)$ BARS

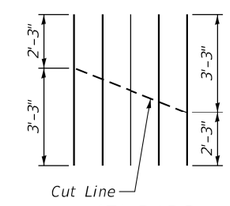

$v_3(E)$ BARS

Note: Cut v(E) bars and use remainder on opposite face/end of concrete fascia.

BORING LOG RW-05

Page 1 of 1

Wang Engineering
wangeng@wangeng.com
1145 N Main Street
Lombard, IL 60148
Telephone: (630) 953-9928
Fax:

WEI Job No.: 486-23-03

Client: Collins Engineers, Inc.
Project: IL Route 59 Retaining Wall
Location: Bartlett, Illinois

Datum: NGVD
Elevation: 795.61 ft
North: 1924265.47 ft
East: 1018642.44 ft
Station:
Offset:

Elevation (ft)	SOIL AND ROCK DESCRIPTION	Depth (ft)	Sample Type	Sample No.	SPT Values (blw/6 in)	Qu (tsf)	Moisture Content (%)
794.8	10-inch thick, CONCRETE --PAVEMENT--						
794.3	5-inch thick, medium dense, brown SANDY GRAVEL --BASE COURSE--						
	Dense, reddish brown SANDY GRAVEL; moist --FILL-- --RDR 3--	5		1	11 11 9	NP	5
				2	18 18 17	NP	9
790.1	Stiff, black SILTY CLAY LOAM, trace organic --BURIED TOPSOIL-- --RDR 2--			3	3 4 4	1.64 B	25
787.6	Stiff to hard, light brown to greenish gray SILTY CLAY to SILTY CLAY LOAM, trace gravel; damp --RDR 2--	10		4	2 3 3	1.56 B	28
	--L_L = 55%, P_L = 21%-- --% Gravel = 0.0-- --% Sand = 1.4-- --% Silt = 69.2-- --% Clay = 29.5--			5	4 6 7	2.54 B	16
		15		6	5 13 12	3.61 B	16
				7	18 13 13	4.50 P	17
775.6		20		8	8 9 14	3.36 B	17

Boring terminated at 20.00 ft

GENERAL NOTES

Begin Drilling: 11-28-2017 Complete Drilling: 11-28-2017
Drilling Contractor: Wang Testing Services Drill Rig: D50 TMR [78%]
Driller: K&N Logger: RKC Checked by: M. Snider
Drilling Method: 2.25 IDA HSA; 140 lb autohammer; Boring backfilled upon completion

WATER LEVEL DATA

While Drilling: DRY
At Completion of Drilling: DRY
Time After Drilling: NA
Depth to Water: NA
The stratification lines represent the approximate boundary between soil types; the actual transition may be gradual.

BORING LOG RW-06

Page 1 of 1

Wang Engineering
wangeng@wangeng.com
1145 N Main Street
Lombard, IL 60148
Telephone: (630) 953-9928
Fax:

WEI Job No.: 486-23-03

Client: Collins Engineers, Inc.
Project: IL Route 59 Retaining Wall
Location: Bartlett, Illinois

Datum: NGVD
Elevation: 796.10 ft
North: 1924334.25 ft
East: 1018667.62 ft
Station:
Offset:

Elevation (ft)	SOIL AND ROCK DESCRIPTION	Depth (ft)	Sample Type	Sample No.	SPT Values (blw/6 in)	Qu (tsf)	Moisture Content (%)
795.3	10-inch thick, CONCRETE --PAVEMENT--						
794.3	11-inch thick, medium dense, brown SANDY GRAVEL; moist --BASE COURSE--			1	7 7 9	NP	8
	Stiff, brown SILTY CLAY LOAM, trace gravel; moist --FILL-- --RDR 2--						
791.9	Dense, brown GRAVELLY SAND; moist --FILL-- --RDR 2--	5		2	11 26 17	1.09 P	18
790.4	Very stiff to hard, brown and gray SILTY CLAY to SILTY CLAY LOAM, trace gravel; damp --RDR 2--			3	5 5 7	4.02 B	18
		10		4	3 6 7	3.77 B	19
				5	6 6 9	2.09 P	20
		15		6	5 7 7	4.5+ B	23
				7	4 6 8	4.76 B	23
778.1	Stiff, brown SILTY CLAY to CLAY, damp --RDR 2--						
776.1		20		8	4 6 8	1.09 P	21

Boring terminated at 20.00 ft

GENERAL NOTES

Begin Drilling: 11-29-2017 Complete Drilling: 11-29-2017
Drilling Contractor: Wang Testing Services Drill Rig: D50 TMR [78%]
Driller: K&N Logger: RKC Checked by: M. Snider
Drilling Method: 2.25 IDA HSA; 140 lb autohammer; Boring backfilled upon completion

WATER LEVEL DATA

While Drilling: DRY
At Completion of Drilling: DRY
Time After Drilling: NA
Depth to Water: NA
The stratification lines represent the approximate boundary between soil types; the actual transition may be gradual.

BORING LOG RW-07

Page 1 of 1

Wang Engineering
wangeng@wangeng.com
1145 N Main Street
Lombard, IL 60148
Telephone: (630) 953-9928
Fax:

WEI Job No.: 486-23-03

Client: Collins Engineers, Inc.
Project: IL Route 59 Retaining Wall
Location: Bartlett, Illinois

Datum: NGVD
Elevation: 797.19 ft
North: 1924407.69 ft
East: 1018695.42 ft
Station:
Offset:

Elevation (ft)	SOIL AND ROCK DESCRIPTION	Depth (ft)	Sample Type	Sample No.	SPT Values (blw/6 in)	Qu (tsf)	Moisture Content (%)
796.3	11-inch thick, CONCRETE --PAVEMENT--						
796.2	13-inch thick, medium dense, brown SANDY GRAVEL; moist --BASE COURSE--			1	7 9 14	NP	8
	Stiff, dark gray SILTY CLAY LOAM, trace gravel; damp --FILL-- --RDR 2--	5		2	3 4 5	1.72 B	18
791.7	Stiff to hard, dark gray and brown SILTY CLAY to SILTY CLAY LOAM, trace gravel --RDR 2--			3	6 8 9	7.13 B	16
		10		4	6 10 12	5.08 B	17
				5	5 8 12	6.72 B	19
		15		6	5 9 11	6.56 B	19
				7	5 7 8	1.00 P	20
		20		8	3 3 6	1.56 B	16

Boring terminated at 20.00 ft

GENERAL NOTES

Begin Drilling: 11-29-2017 Complete Drilling: 11-29-2017
Drilling Contractor: Wang Testing Services Drill Rig: D50 TMR [78%]
Driller: K&N Logger: RKC Checked by: M. Snider
Drilling Method: 2.25 IDA HSA; 140 lb autohammer; Boring backfilled upon completion

WATER LEVEL DATA

While Drilling: DRY
At Completion of Drilling: DRY
Time After Drilling: NA
Depth to Water: NA
The stratification lines represent the approximate boundary between soil types; the actual transition may be gradual.

BORING LOG RW-08

Page 1 of 1

Wang Engineering
wangeng@wangeng.com
1145 N Main Street
Lombard, IL 60148
Telephone: (630) 953-9928
Fax:

WEI Job No.: 486-23-03

Client: Collins Engineers, Inc.
Project: IL Route 59 Retaining Wall
Location: Bartlett, Illinois

Datum: NGVD
Elevation: 798.82 ft
North: 1924478.96 ft
East: 1018721.80 ft
Station:
Offset:

Elevation (ft)	SOIL AND ROCK DESCRIPTION	Depth (ft)	Sample Type	Sample No.	SPT Values (blw/6 in)	Qu (tsf)	Moisture Content (%)
798.1	9-inch thick, CONCRETE --PAVEMENT--						
797.2	12-inch thick, loose, brown and gray SANDY GRAVEL --BASE COURSE--			1	5 4 5	NP	8
	Hard, brown to gray SILTY CLAY LOAM, trace gravel --FILL--	5		2	6 8 11	5.00 B	18
793.3	Very stiff to hard, brown to gray SILTY CLAY LOAM trace gravel; damp --RDR 2--			3	5 6 8	3.36 B	20
		10		4	4 5 8	4.26 B	20
				5	4 5 7	5.74 B	19
		15		6	4 6 6	3.20 B	19
783.3	Very dense, brown SANDY GRAVEL; damp --RDR 3--			7	8 16 33	NP	5
780.3	Dense, yellowish brown, medium SAND; damp --RDR 3--			8	9 18 25	NP	8
778.8		20					

Boring terminated at 20.00 ft

GENERAL NOTES

Begin Drilling: 11-29-2017 Complete Drilling: 11-29-2017
Drilling Contractor: Wang Testing Services Drill Rig: D50 TMR [78%]
Driller: K&N Logger: RKC Checked by: M. Snider
Drilling Method: 2.25 IDA HSA; 140 lb autohammer; Boring backfilled upon completion

WATER LEVEL DATA

While Drilling: 15.50 ft
At Completion of Drilling: DRY
Time After Drilling: NA
Depth to Water: NA
The stratification lines represent the approximate boundary between soil types; the actual transition may be gradual.

COLLINS ENGINEERS
123 N. Wacker Dr.
Suite 900
Chicago, IL 60606
Tele. (312) 704-9300
Fax. (312) 704-9320
www.collinsengr.com
ILLINOIS PROFESSIONAL DESIGN FIRM LICENSE NO. 184-000993

FILE NAME =	USER NAME =	DESIGNED - LY	REVISED -
		CHECKED - JMS	REVISED -
	PLOT SCALE =	DRAWN - DR	REVISED -
	PLOT DATE =	CHECKED - JMS	REVISED -

STATE OF ILLINOIS
DEPARTMENT OF TRANSPORTATION

BORING LOGS
STRUCTURE NO. 022-2999

SHEET NO. S6 OF S6 SHEETS

F.A.P. RTE.	SECTION	COUNTY	TOTAL SHEETS	SHEET NO.
338	110TS-N	DuPAGE	133	99

CONTRACT NO. 62F19

ILLINOIS FED. AID PROJECT

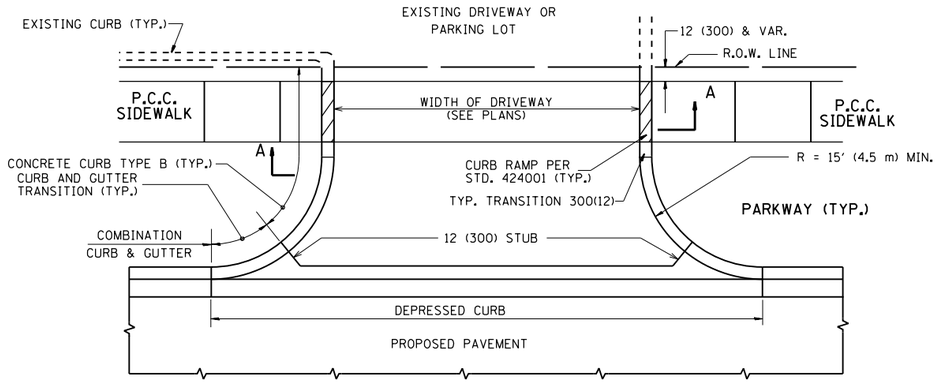

WITH CONCRETE CURB, TYPE B

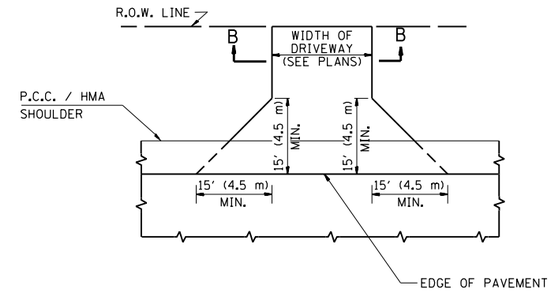

ADJACENT TO P.C.C. / HMA SHOULDER

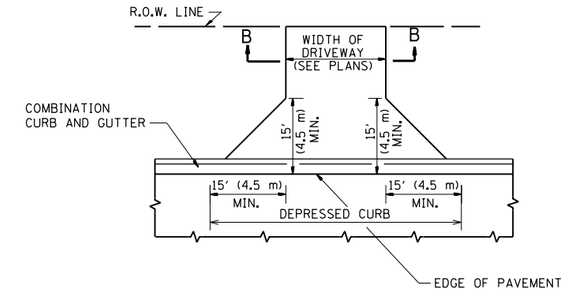

ADJACENT TO CURB AND GUTTER

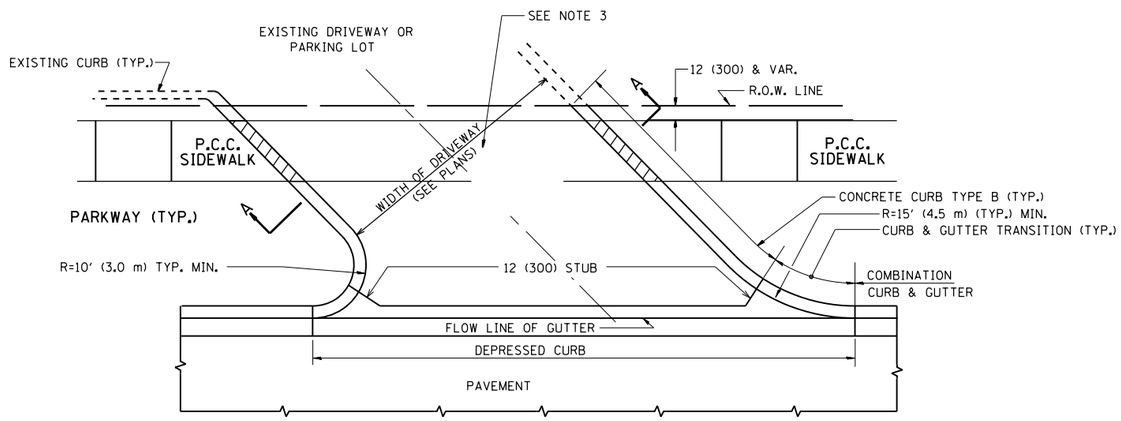

WITH CONCRETE CURB, TYPE B

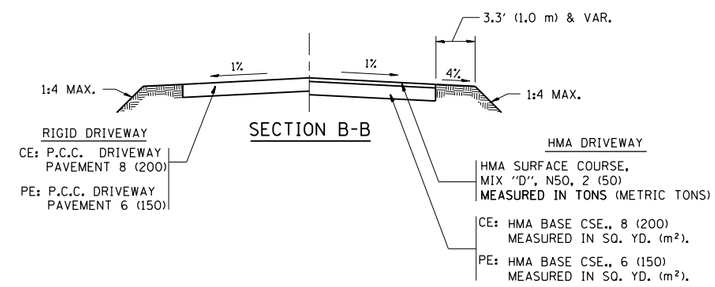

SECTION B-B

RURAL FIELD ENTRANCE (FE)

HMA SURFACE COURSE, MIX "D", N50, 2 (50) MEASURED IN TONS (METRIC TONS)

AGGREGATE BASE CSE., TYPE B, 8 (200) MEASURED IN SQ. YD. (m^2).

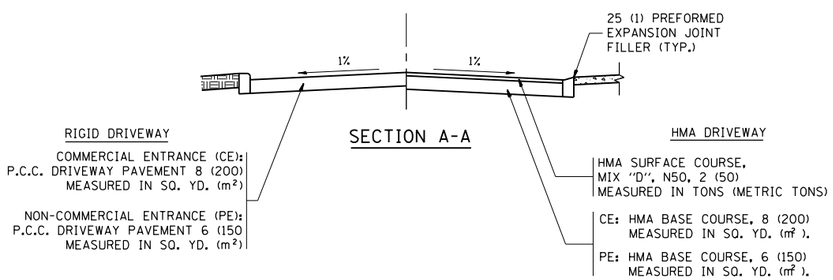

SECTION A-A

GENERAL NOTES:

DRIVEWAY SLOPES, LOCATIONS, & GEOMETRIC LAYOUT SHALL BE IN ACCORDANCE WITH THE LATEST EDITION OF THE "HANDBOOK FOR POLICY ON PERMITS FOR ACCESS DRIVEWAYS TO STATE HIGHWAYS". FOR FURTHER LAYOUT REQUIREMENTS, REFER TO ILLUSTRATIONS IN THE PERMIT HANDBOOK. DRIVEWAYS SHALL BE REPLACED IN KIND, UNLESS OTHERWISE NOTED ON THE PLANS.

COMMERCIAL DRIVEWAYS SHALL BE CONSTRUCTED WITH CONCRETE CURB, TYPE B RETURNS EXCEPT WHEN THE SIDEWALK EDGE IS 4 FEET (1.2 METERS) OR LESS FROM THE BACK OF CURB, CONSTRUCT A FLARE DRIVEWAY WITHOUT CURB.

THE RESIDENT ENGINEER SHALL CONTACT THE TRAFFIC PERMIT OFFICE AT 847/ 705-4131 FOR ANY QUESTIONS ON DRIVEWAYS SHOWN IN THE PLANS; SPECIFICALLY IN REFERENCE TO ADDITIONAL AND/OR RELOCATION/REMOVAL OF A DRIVEWAY.

COMBINATION CONCRETE CURB & GUTTER SHALL BE MEASURED STRAIGHT ACROSS THE DRIVEWAY. NO ADDITIONAL COMPENSATION WILL BE ALLOWED FOR THE CURB & GUTTER TRANSITION.

1 (25) PREFORMED EXPANSION JOINT FILLER WILL NOT BE PAID SEPARATELY, BUT SHALL BE CONSIDERED INCLUDED IN THE COST OF THE P.C.C. DRIVEWAY PAVEMENT OR P.C.C. SIDEWALK.

WHEN THE P.C.C. SIDEWALK EXTENDS THROUGH THE DRIVEWAY, THE THICKNESS OF THE SIDEWALK IN THE DRIVEWAY AREA SHALL BE THE SAME AS THE DRIVEWAY THICKNESS. SIDEWALK WILL BE PAID FOR AS P.C.C. SIDEWALK OF THE THICKNESS SPECIFIED. SIDEWALK CROSS SLOPE THRU DRIVEWAY AREA TO BE A MAXIMUM OF 1:50.

FILE NAME = pw:\\planroom.dot.illinois.gov:PWIDOT\Documents\IDOT Offices\District 1\Projects\PI050	USER NAME = kalorm	DESIGNED - R. SHAH	REVISED - P. LaFLUER 04-15-03	STATE OF ILLINOIS DEPARTMENT OF TRANSPORTATION	DRIVEWAY DETAILS – DISTANCE BETWEEN R.O.W. AND FACE OF CURB & EDGE OF SHOULDER >= 15' (4.5 m)	F.A.P. RTE.	SECTION	COUNTY	TOTAL SHEETS	SHEET NO.
			REVISED - R. BORO 01-01-07			338	110TS-N	DUPAGE	133	100
	PLOT SCALE = 100.0002 ' / in.	CHECKED -	REVISED - R. BORO 06-11-08			BD0156-07 (BD-01)		CONTRACT NO. 62F19		
	PLOT DATE = 3/21/2019	DATE - 11-04-95	REVISED - R. BORO 09-06-11		SCALE: NONE / SHEET NO. 1 OF 1 SHEETS / STA. TO STA.	FED. ROAD DIST. NO. 1	ILLINOIS	FED. AID PROJECT		