06-14-2019 LETTING ITEM 111

F.A.P. RTE.	SECTION	COUNTY	TOTAL SHEETS	SHEET NO.
VAR	D6 PATCHING SANG CO 2019	SANGAMON	30	1
	ILLINOIS	CONTRACT: 72L20		

STATE OF ILLINOIS
DEPARTMENT OF TRANSPORTATION
DIVISION OF HIGHWAYS

FOR INDEX OF SHEETS, SEE SHEET NO. 2

PROPOSED
CONTRACT MAINTENANCE

VARIOUS ROUTES
SECTION D6 PATCHING SANG CO 2019
PATCHING
SANGAMON COUNTY

C-96-056-19

D-96-042-19

LOCATION OF SECTION INDICATED THUS:-

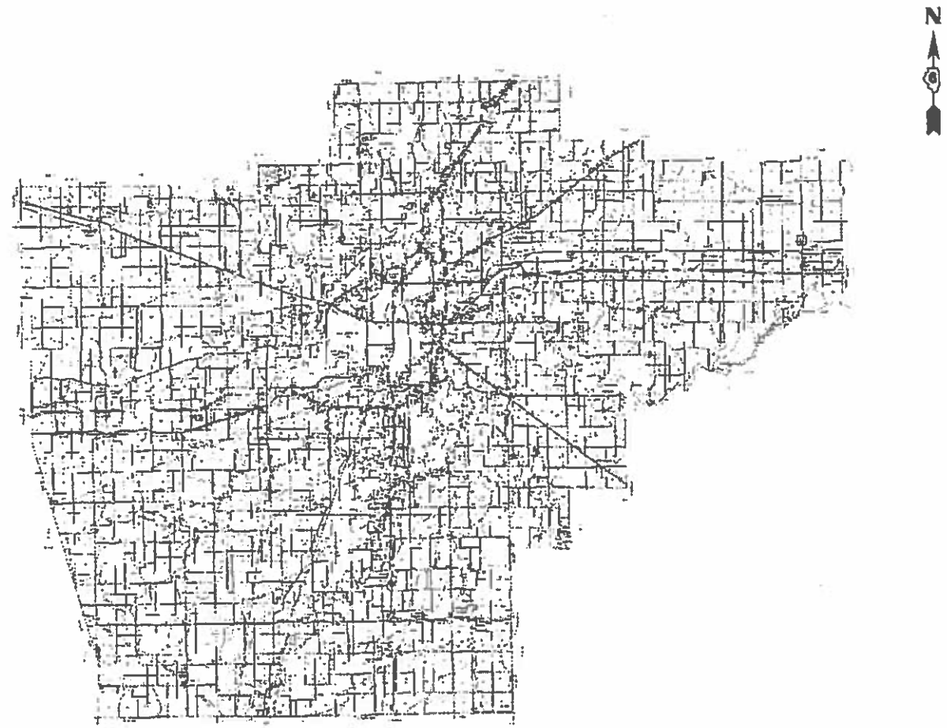

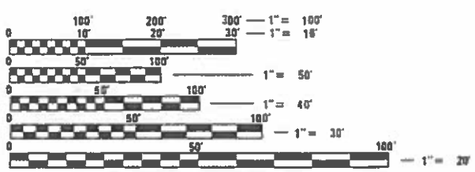

FULL SIZE PLANS HAVE BEEN PREPARED USING STANDARD ENGINEERING SCALES. REDUCED SIZED PLANS WILL NOT CONFORM TO STANDARD SCALES. IN MAKING MEASUREMENTS ON REDUCED PLANS, THE ABOVE SCALES MAY BE USED.

J.U.L.I.E.
JOINT UTILITY LOCATION INFORMATION FOR EXCAVATION
1-800-892-0123
OR 811

STATE OF ILLINOIS
DEPARTMENT OF TRANSPORTATION
DIVISION OF HIGHWAYS

SUBMITTED 29 March 2019

DEPUTY DIRECTOR OF HIGHWAYS, REGION ENGINEER

May 10 2019

ENGINEER OF DESIGN AND ENVIRONMENT

May 10 2019

DIRECTOR OF HIGHWAYS PROJECT IMPLEMENTATION

PROJECT ENGINEER : MIKE IRWIN – (217)524-7765
PROJECT MANAGER : SHANNON NICHOLSON – (217)785-5836

GROSS LENGTH: 72947.6 FT = 13.8 MI
NET LENGTH: 72947.6 FT = 13.8 MI

PRINTED BY THE AUTHORITY OF THE STATE OF ILLINOIS

CONTRACT NO. 72L20

INDEX

SHEET NO.	DESCRIPTION
1.	COVER SHEET
2.	INDEX, STANDARDS, GENERAL NOTES, SIGNATURES
3.	SUMMARY OF QUANTITIES
4.	SCHEDULE OF QUANTITIES
5.-6.	LOCATION MAP
7.-30.	TYPICAL SECTIONS

STANDARDS

STANDARD NO.	DESCRIPTION
442201-03	CLASS C & D PATCHES
701201-05	LN CLOSURE 2L2W-DAY ONLY
701421-08	LN CLOSURE MULTI LN-DAY OP ONLY45-55 MPH
701601-09	URBAN LN CLOSURE MULTI LN 1W 2W WITH NONTRVSABLE MED
701602-10	URBAN LN CLOSURE MULTI LN 2W WITH BIDIRECT LEFT TURN LN
701701-10	URBAN LN CLOSURE MULTI LN INTERSECTION
701901-08	TRAFFIC CONTROL DEVICES

STATE OF ILLINOIS
DEPARTMENT OF TRANSPORTATION
DIVISION OF HIGHWAYS
DISTRICT 6

EXAMINED 3/29/19 20 ____

ENGINEER OF OPERATIONS

EXAMINED 29 March 20 19

ENGINEER OF PROJECT IMPLEMENTATION

EXAMINED March 20 20 19

ENGINEER OF PROGRAM DEVELOPMENT

CODE NO.	ITEM	UNIT	TOTAL QUANTITY	0-02174-6007 100% STATE SANGAMON ROADWAY 0006 URBAN
44201341	CLASS C PATCHES, TYPE II, 9 INCH	SQ YD	1128	1128
44201345	CLASS C PATCHES, TYPE III, 9 INCH	SQ YD	352	352
44201347	CLASS C PATCHES, TYPE IV, 9 INCH	SQ YD	140	140
44201353	CLASS C PATCHES, TYPE II, 10 INCH	SQ YD	424	424
44201357	CLASS C PATCHES, TYPE III, 10 INCH	SQ YD	80	80
44201365	CLASS C PATCHES, TYPE II, 11 INCH	SQ YD	216	216
67100100	MOBILIZATION	L SUM	1	1
70100450	TRAFFIC CONTROL AND PROTECTION, STANDARD 701201	L SUM	1	1
70100310	TRAFFIC CONTROL AND PROTECTION, STANDARD 701421	L SUM	1	1
70102630	TRAFFIC CONTROL AND PROTECTION, STANDARD 701601	L SUM	1	1
70102632	TRAFFIC CONTROL AND PROTECTION, STANDARD 701602	L SUM	1	1
70102635	TRAFFIC CONTROL AND PROTECTION, STANDARD 701701	L SUM	1	1
70107025	CHANGEABLE MESSAGE SIGN	CAL DA	28	28

	PATCHES, CLASS C, 9 INCH		
	TY II	TY III	TY IV
LANE			
DL/ML/PL	(S.Y.)	(S.Y.)	(S.Y.)
Bus 55 (Sherman Blvd) from Cabin Smoke Trail to Village Center Dr.			
NBDL	112.0	80.0	28.0
SBDL	112.0	80.0	0.0
NBPL	112.0	16.0	56.0
SBPL	104.0	80.0	28.0
Total:	**440.0**	**256.0**	**112.0**
IL 97 from IL 125 to Sangamon Co Line			
NB	288.0	48.0	28.0
SB	400.0	48.0	0.0
Total:	**688.0**	**96.0**	**28.0**

	PATCHES, CLASS C, 10 INCH		
	TY II	TY III	TY IV
LANE			
DL/ML/PL	(S.Y.)	(S.Y.)	(S.Y.)
Old 36 near Riverton from SN 084-0053 (over 7th St) to Old Decatur Rd.			
EB	112.0	0.0	0.0
WB	72.0	0.0	0.0
Total:	**184.0**	**0.0**	**0.0**
IL 29 from I-55 to State St in Rochester			
EBDL	136.0	16.0	0.0
WBDL	256.0	48.0	0.0
EBPL	168.0	0.0	0.0
WBPL	240.0	16.0	0.0
Total:	**240.0**	**80.0**	0.0

	PATCHES, CLASS C, 11 INCH		
	TY II	TY III	TY IV
LANE			
DL/ML/PL	(S.Y.)	(S.Y.)	(S.Y.)
Clear Lake Ave from McCreery Ave to Dirksen Pkwy			
EBDL	56.0	0.0	0.0
WBDL	40.0	0.0	0.0
EBPL	56.0	0.0	0.0
WBPL	64.0	0.0	0.0
Total:	**216.0**	**0.0**	**0.0**

N

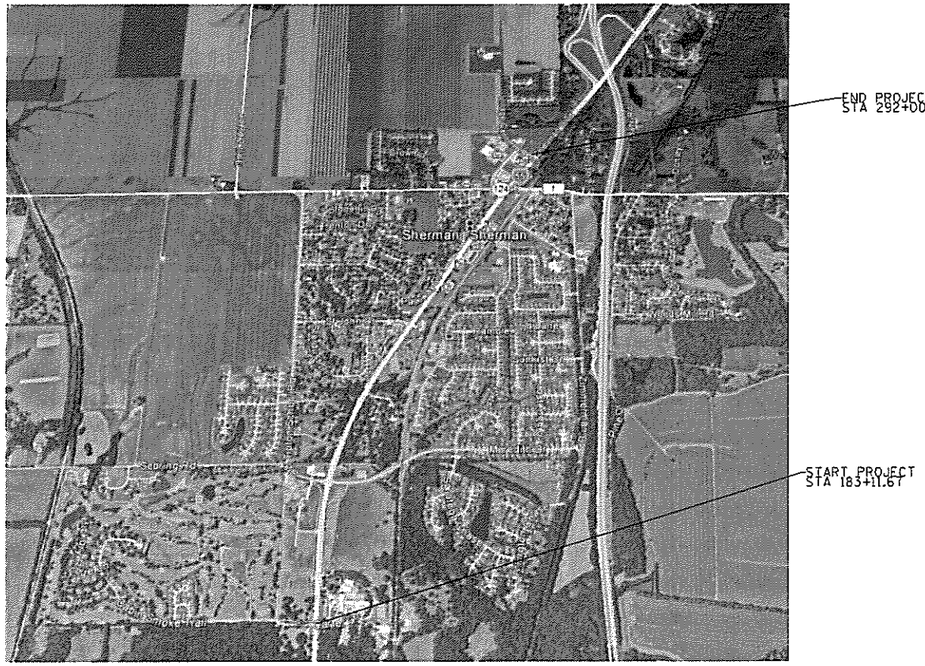

LOCATION #1
SHERMAN BLVD

LOCATION #2
CLEAR LAKE AVE

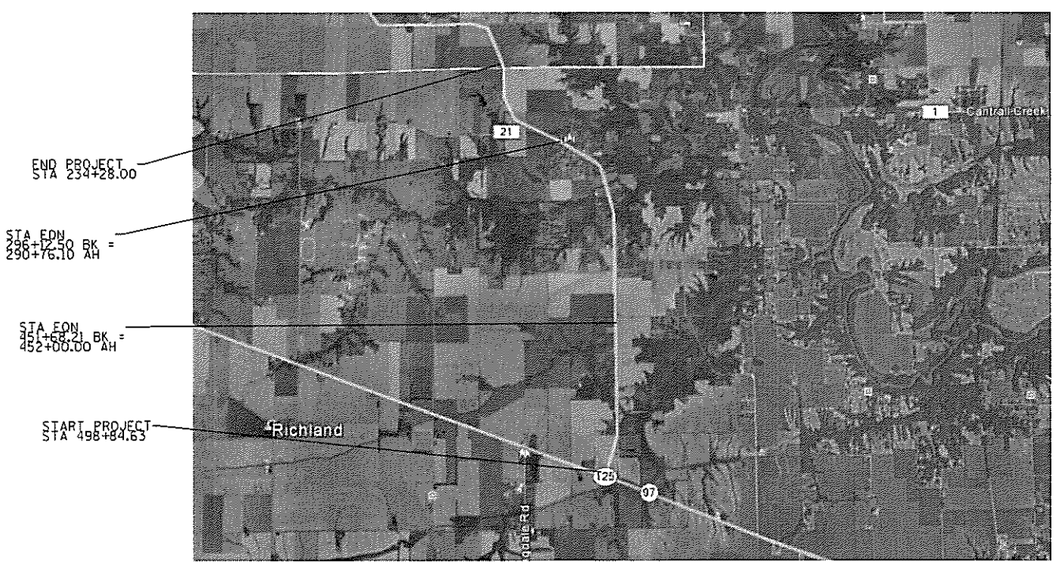

LOCATION #3
IL 97

FILE NAME = S:\CONTRMAINT.CAD\72L20 - DB PATCHING SANG CO 2019\PLANS\72L20-sht-5-project location.dgn	USER NAME = nicholsonal	DESIGNED -	REVISED -
		DRAWN - DMS	REVISED -
	PLOT SCALE = 0.420000 ' / in.	CHECKED -	REVISED -
Default	PLOT DATE = 3/25/2019	DATE - 5-21-2013	REVISED -

STATE OF ILLINOIS
DEPARTMENT OF TRANSPORTATION

PROJECT LOCATION

SCALE: _____ SHEET 1 OF 2 SHEETS STA. _____ TO STA. _____

F.A.P. RTE.	SECTION	COUNTY	TOTAL SHEETS	SHEET NO.
VAR	D6 PATCHING SANG CO 2019	SANGAMON	30	5
		CONTRACT NO. 72L20		
		ILLINOIS FED. AID PROJECT		

N

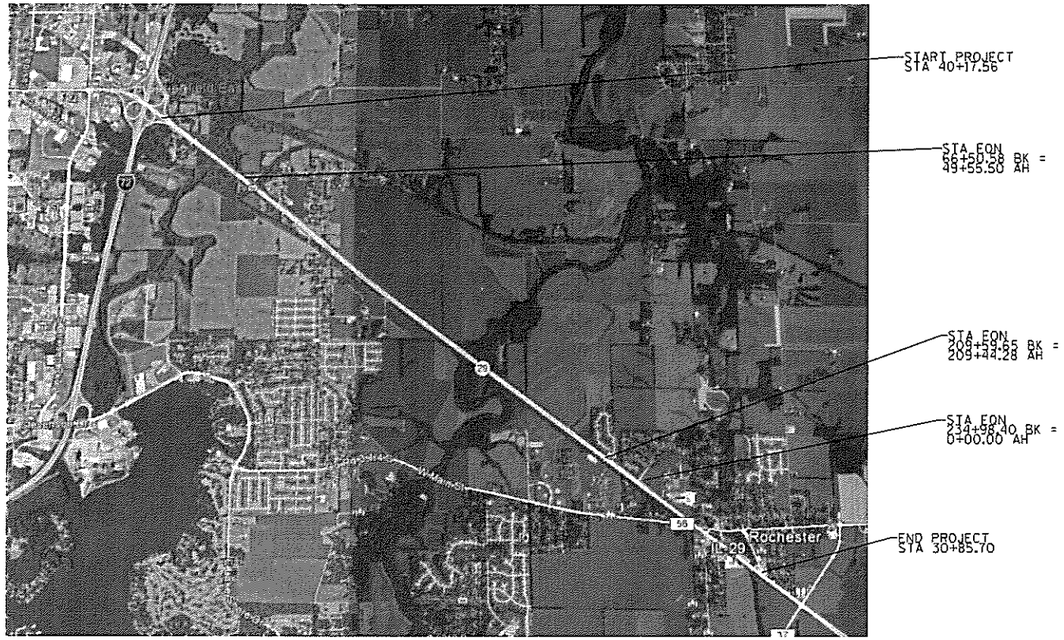

LOCATION #4
IL 29

LOCATION #5
OLD 36

FILE NAME = S:\CONTRMAINT_CAD\72L20 - DS PATCHING SANG CO 2019\PLANS\72L20-sht-6-project location.dgn	USER NAME = nicholsons1	DESIGNED -	REVISED -	STATE OF ILLINOIS DEPARTMENT OF TRANSPORTATION	PROJECT LOCATION	F.A.P. RTE.	SECTION	COUNTY	TOTAL SHEETS	SHEET NO.
		DRAWN - DMS	REVISED -			VAR	06 PATCHING SANG CO 2019	SANGAMON	30	6
	PLOT SCALE = 0.420000 ' / in.	CHECKED -	REVISED -					CONTRACT NO. 72L20		
Default	PLOT DATE = 3/28/2019	DATE - 5-21-2013	REVISED -		SCALE: ____ SHEET 2 OF 2 SHEETS STA. ____ TO STA. ____			ILLINOIS FED. AID PROJECT		

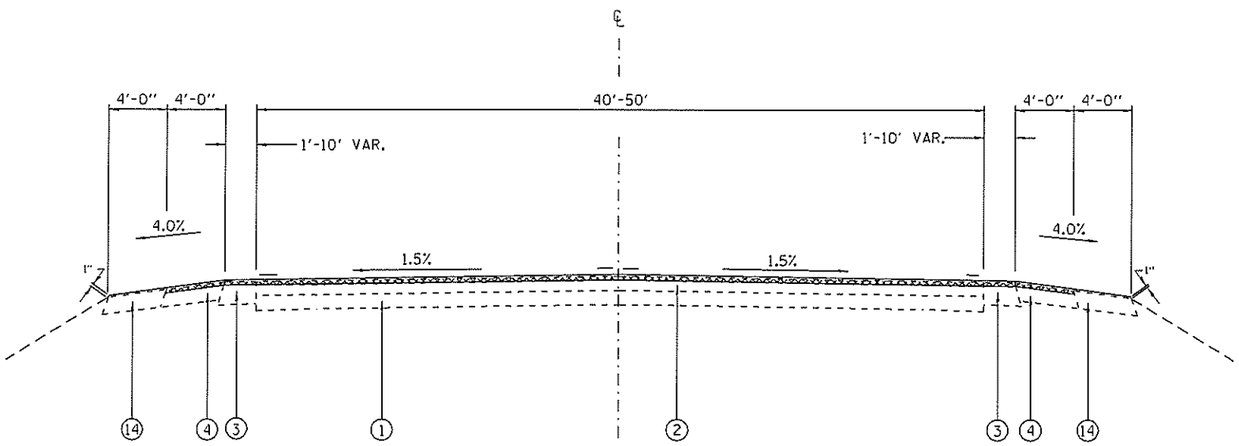

LT. & RT. STATION 181+70 TO 198+03

LEGEND

1. EXISTING CONCRETE PAVEMENT 9"-7"-9"
2. EXISTING HMA OVERLAY 9"
3. EXISTING BASE COURSE WIDENING
4. EXISTING HMA SHOULDERS 8"
5. EXISTING P.C.C. BASE COURSE 8"
6. EXISTING CONCRETE PAVEMENT 10"
7. EXISTING #5 DEFORMED BAR
8. EXISTING LONGITUDINAL METAL JOINT
9. EXISTING PAVEMENT FABRIC
10. EXISTING BIT. CONC. BIND. & SURF. CSE.
11. EXISTING BIT. CONC. SHOULDER
12. EXISTING BIT. SHOULDERS OVERLAY 2"
13. EXISTING CONCRETE CURB & GUTTER
14. EXISTING AGGREGATE SHOULDERS, TYPE B, 9"
15. EXISTING BITUMINOUS SURFACE 5"
16. EXISTING AGGREGATE SHOULDERS TYPE B

FILE NAME = S:\CONTRMAINT.CAD\72L20 - D6 PATCHING SANG CO 2019\PLANS\72L20-sht-7-9-typicals-BUS55.dgn	USER NAME = nicholsons1	DESIGNED -	REVISED -	STATE OF ILLINOIS DEPARTMENT OF TRANSPORTATION	TYPICAL CROSS SECTIONS BUS 55 (SHERMAN BLVD)	F.A.P. RTE.	SECTION	COUNTY	TOTAL SHEETS	SHEET NO.
	PLOT SCALE = 60.0000 ' / in.	DRAWN -	REVISED -			VAR	D6 PATCHING SANG CO 2019	SANGAMON	30	7
Default	PLOT DATE = 3/28/2019	CHECKED -	REVISED -					CONTRACT NO. 72L20		
		DATE -	REVISED -		SCALE: ____ SHEET 1 OF 3 SHEETS STA. ____ TO STA. ____			ILLINOIS FED. AID PROJECT		

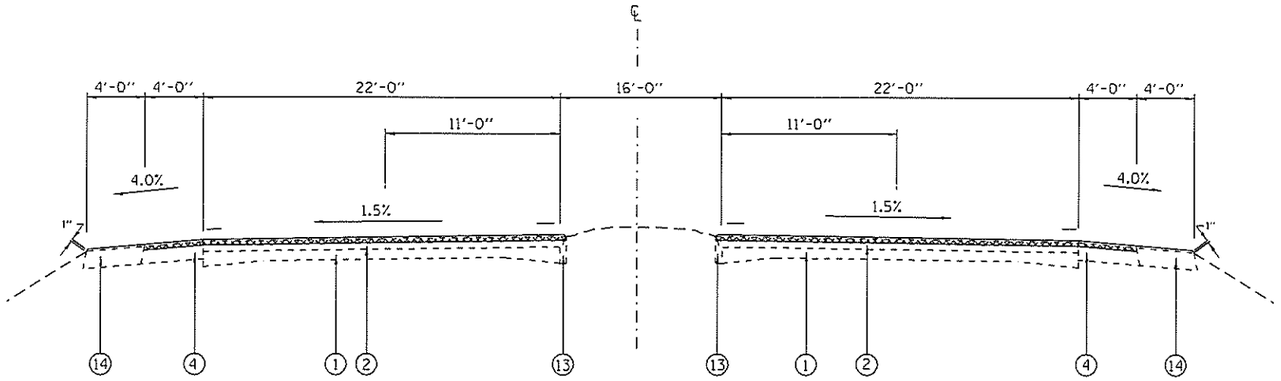

LT. & RT. STATION 198+03 TO 271+57*

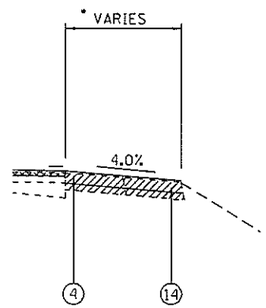

*RT STA 269+10 TO STA 273+14

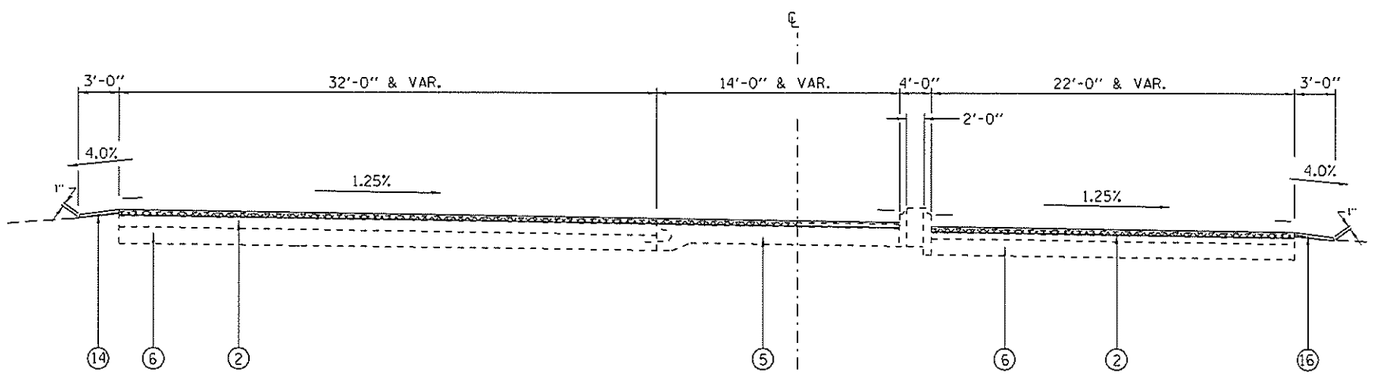

LT. & RT. STATION 271+57 TO 274+35

LEGEND

1. EXISTING CONCRETE PAVEMENT 9"-7"-9"
2. EXISTING HMA OVERLAY 9"
3. EXISTING BASE COURSE WIDENING
4. EXISTING HMA SHOULDERS 8"
5. EXISTING P.C.C. BASE COURSE 8"
6. EXISTING CONCRETE PAVEMENT 10"
7. EXISTING #5 DEFORMED BAR
8. EXISTING LONGITUDINAL METAL JOINT
9. EXISTING PAVEMENT FABRIC
10. EXISTING BIT. CONC. BIND. & SURF. CSE.
11. EXISTING BIT. CONC. SHOULDER
12. EXISTING BIT. SHOULDERS OVERLAY 2"
13. EXISTING CONCRETE CURB & GUTTER
14. EXISTING AGGREGATE SHOULDERS, TYPE B, 9"
15. EXISTING BITUMINOUS SURFACE 5"
16. EXISTING AGGREGATE SHOULDERS TYPE B

FILE NAME = S:\CONTRMAINT_CAD\72L20 - D6 PATCHING SANG CO 2019\PLANS\72L20-sht-7-9-typicals-BUS55.dgn	USER NAME = nicholsonsl	DESIGNED -	REVISED -	STATE OF ILLINOIS DEPARTMENT OF TRANSPORTATION	TYPICAL CROSS SECTIONS BUS 55 (SHERMAN BLVD)	F.A.P. RTE.	SECTION	COUNTY	TOTAL SHEETS	SHEET NO.
		DRAWN -	REVISED -			VAR	D6 PATCHING SANG CO 2019	SANGAMON	30	8
	PLOT SCALE = 60.0000 ' / in.	CHECKED -	REVISED -					CONTRACT NO. 72L20		
Default	PLOT DATE = 3/20/2019	DATE -	REVISED -		SCALE: ____ SHEET 2 OF 3 SHEETS STA. ____ TO STA. ____		ILLINOIS FED. AID PROJECT			

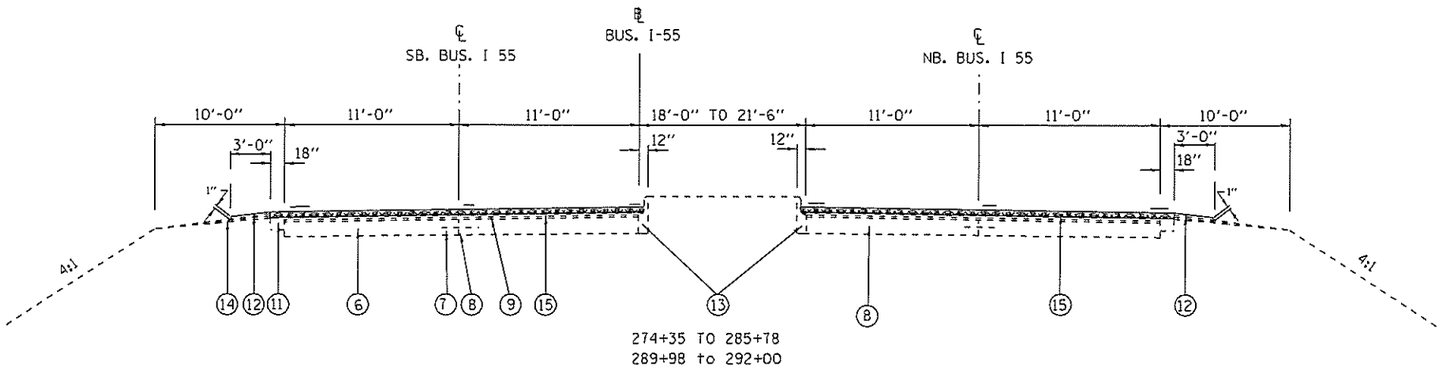

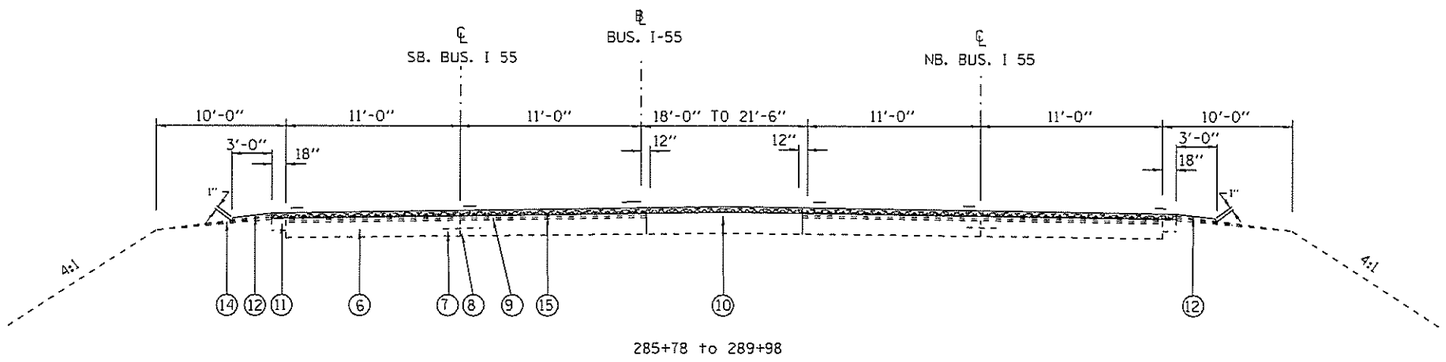

LEGEND

1. EXISTING CONCRETE PAVEMENT 9"-7"-9"
2. EXISTING HMA OVERLAY 9"
3. EXISTING BASE COURSE WIDENING
4. EXISTING HMA SHOULDERS 8"
5. EXISTING P.C.C. BASE COURSE 8"
6. EXISTING CONCRETE PAVEMENT 10"
7. EXISTING #5 DEFORMED BAR
8. EXISTING LONGITUDINAL METAL JOINT
9. EXISTING PAVEMENT FABRIC
10. EXISTING HMA BIND. & SURF. CSE.
11. EXISTING HMA SHOULDER
12. EXISTING HMA SHOULDERS OVERLAY 2"
13. EXISTING CONCRETE CURB & GUTTER
14. EXISTING AGGREGATE SHOULDERS, TYPE B, 9"
15. EXISTING HMA OVERLAY +/- 5"
16. EXISTING AGGREGATE SHOULDERS TYPE B

FILE NAME = S:\CONTRMAINT_CAD\72L20 - D6 PATCHING SANG CO 2019\PLANS\72L20-sht-7-9-typicals-BUS55.dgn	USER NAME = nicholsonsl	DESIGNED -	REVISED -
		DRAWN -	REVISED -
	PLOT SCALE = 50.0000 ' / in.	CHECKED -	REVISED -
Default	PLOT DATE = 3/28/2019	DATE -	REVISED -

STATE OF ILLINOIS
DEPARTMENT OF TRANSPORTATION

TYPICAL CROSS SECTIONS
BUS 55 (SHERMAN BLVD)

SCALE: _____ SHEET 3 OF 3 SHEETS STA. _____ TO STA. _____

F.A.P. RTE.	SECTION	COUNTY	TOTAL SHEETS	SHEET NO.
VAR	D6 PATCHING SANG CO 2019	SANGAMON	30	9
		CONTRACT NO. 72L20		
		ILLINOIS FED. AID PROJECT		

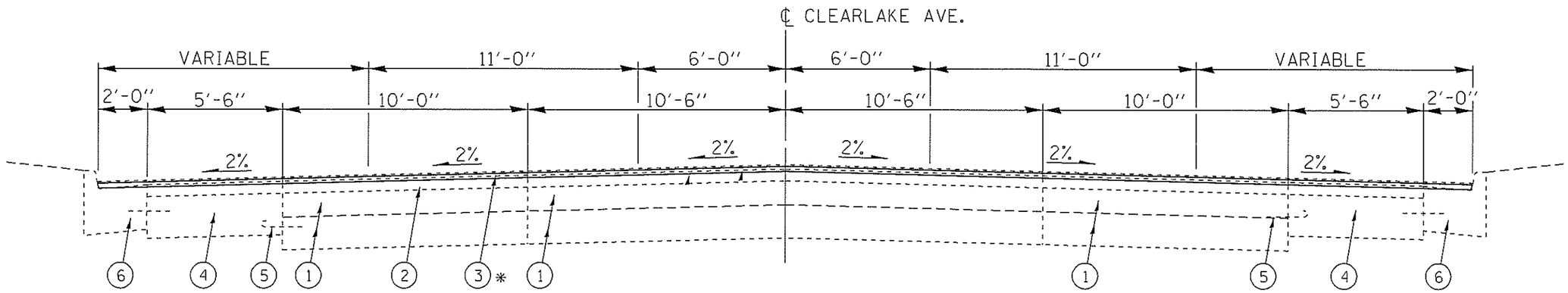

STA. 75+17.58 TO STA. 79+24.00

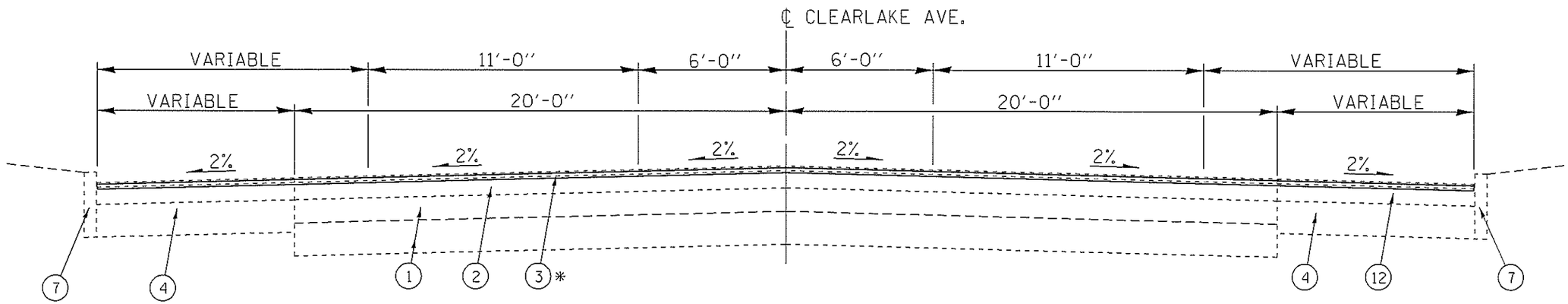

STA. 79+24.00 TO STA. 79+88.00

* EXISTING BIT. CONC. OVERLAY VARIES:
℄ = 2" DEPTH
E.O.P. = 1 1/2" DEPTH
FLOWLINE OF GUTTER = 2 1/2" DEPTH

LEGEND

1. P.C.C. BASE COURSE, 8", W/ BIT. CONC. CL I, 5 3/4"
2. BITUMINOUS CONCRETE SURFACE COURSE, CL I, 3"
3. BITUMINOUS CONCRETE SURFACE COURSE, 1 1/2" *
4. P.C.C. BASE COURSE WIDENING, 8"
5. EXPANSION TIE ANCHORS 3/4" DIA., 30" CTRS.
6. COMBINATION CONCRETE CURB & GUTTER, TYPE B-6.24
7. CONCRETE CURB, TYPE B
8. BRICK PAVEMENT, 4"
9. SAND CUSHION, 1"
10. CONCRETE MEDIAN, TYPE C-4
11. LONGITUDINAL CONSTRUCTION JOINT
12. BITUMINOUS CONCRETE SURFACE, 4"
13. LEVELING BINDER (MACHINE METHOD), VARIABLE DEPTH

FILE NAME = S:\CONTRMAINT_CAD\72L20 - D6 PATCHING	USER NAME = nicholsonsj	DESIGNED - RTS	REVISED - RTS 04-09-09	STATE OF ILLINOIS DEPARTMENT OF TRANSPORTATION	TYPICAL CROSS SECTIONS CLEARLAKE AVENUE	F.A.P. RTE.	SECTION	COUNTY	TOTAL SHEETS	SHEET NO.
	SANG CO 2019\PLANS\72L20-sht-10-14-typicals-clearlake.dgn	DRAWN - RTS	REVISED -			VAR	D6 PATCHING SANG CO 2019	SANGAMON	30	10
	PLOT SCALE = 7.0000 ' / in.	CHECKED -	REVISED -					CONTRACT NO. 72L20		
	PLOT DATE = 3/28/2019	DATE - 09-25-08	REVISED -		SCALE: SHEET NO. 1 OF 5 SHEETS STA. TO STA.	FED. ROAD DIST. NO.	ILLINOIS	FED. AID PROJECT		

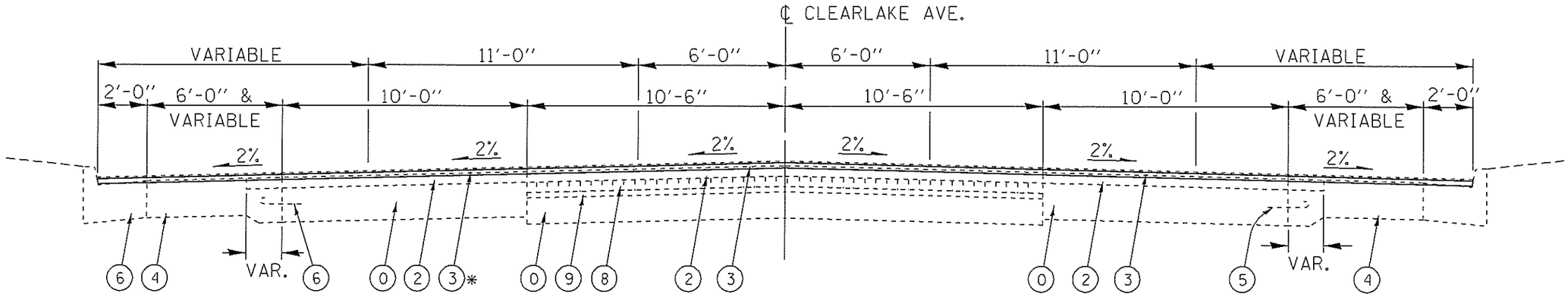

STA. 79+88.00 TO STA. 92+40.00

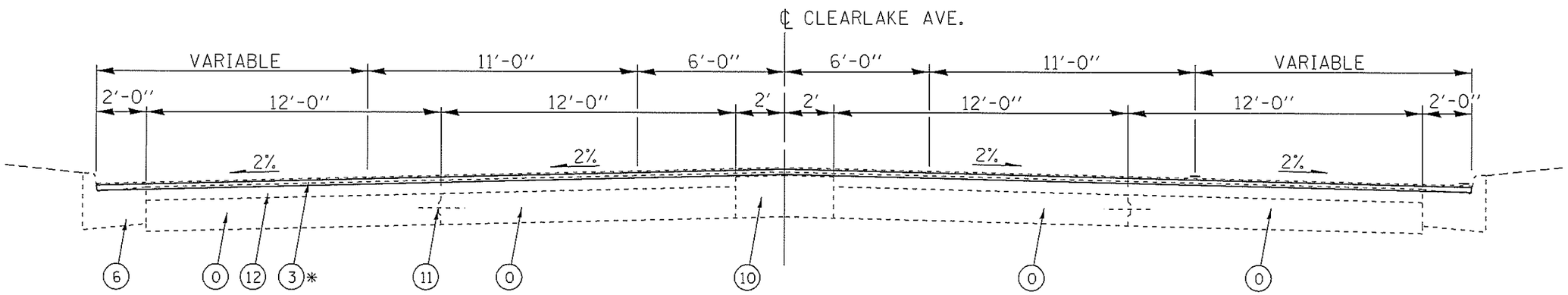

STA. 92+40.00 TO STA. 106+50.00

* EXISTING BIT. CONC. OVERLAY VARIES:
℄ = 2" DEPTH
E.O.P. = 1 1/2" DEPTH
FLOWLINE OF GUTTER = 2 1/2" DEPTH

LEGEND

0. P.C.C. BASE COURSE, 8"
1. P.C.C. BASE COURSE, 8", W/ BIT. CONC. CL I, 5 3/4"
2. BITUMINOUS CONCRETE SURFACE COURSE, CL I, 3"
3. BITUMINOUS CONCRETE SURFACE COURSE, 1 1/2" *
4. P.C.C. BASE COURSE WIDENING, 8"
5. EXPANSION TIE ANCHORS 3/4" DIA., 30" CTRS.
6. COMBINATION CONCRETE CURB & GUTTER, TYPE B-6.24
7. CONCRETE CURB, TYPE B
8. BRICK PAVEMENT, 4"
9. SAND CUSHION, 1"
10. CONCRETE MEDIAN, TYPE C-4
11. LONGITUDINAL CONSTRUCTION JOINT
12. BITUMINOUS CONCRETE SURFACE, 4"
13. LEVELING BINDER (MACHINE METHOD), VARIABLE DEPTH

FILE NAME = S:\CONTRMAINT.CAD\72L20 - D6 PATCHING SANG CO 2019\PLANS\72L20-sht-10-14-typicals-clearlake.dgn	USER NAME = nicholsonsl	DESIGNED - RTS	REVISED - RTS 04-09-09	STATE OF ILLINOIS DEPARTMENT OF TRANSPORTATION	TYPICAL CROSS SECTIONS CLEARLAKE AVENUE	F.A.P. RTE.	SECTION	COUNTY	TOTAL SHEETS	SHEET NO.
		DRAWN - RTS	REVISED -			VAR	D6 PATCHING SANG CO 2019	SANGAMON	30	11
	PLOT SCALE = 7.0000 ' / in.	CHECKED -	REVISED -					CONTRACT NO. 72L20		
	PLOT DATE = 3/28/2019	DATE - 09-25-08	REVISED -		SCALE: SHEET NO. 2 OF 5 SHEETS STA. TO STA.	FED. ROAD DIST. NO.	ILLINOIS	FED. AID PROJECT		

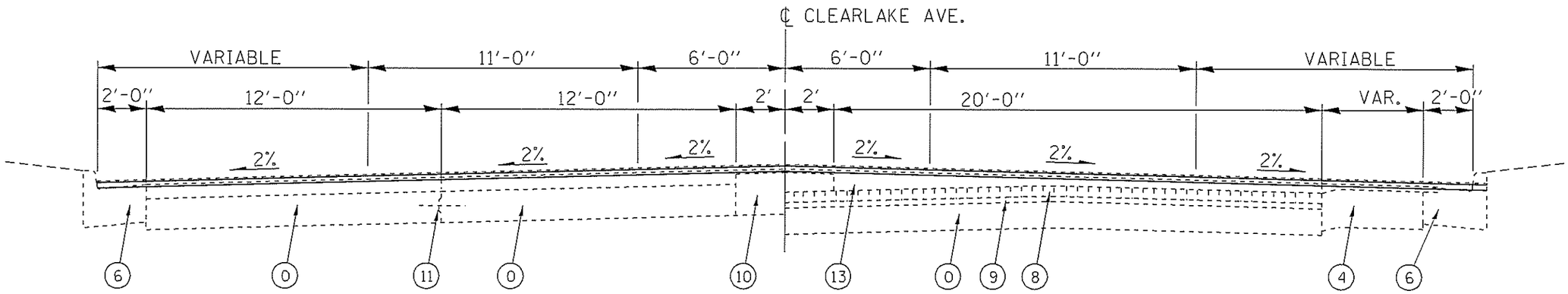

STA. 106+50.00 TO STA. 109+40.72

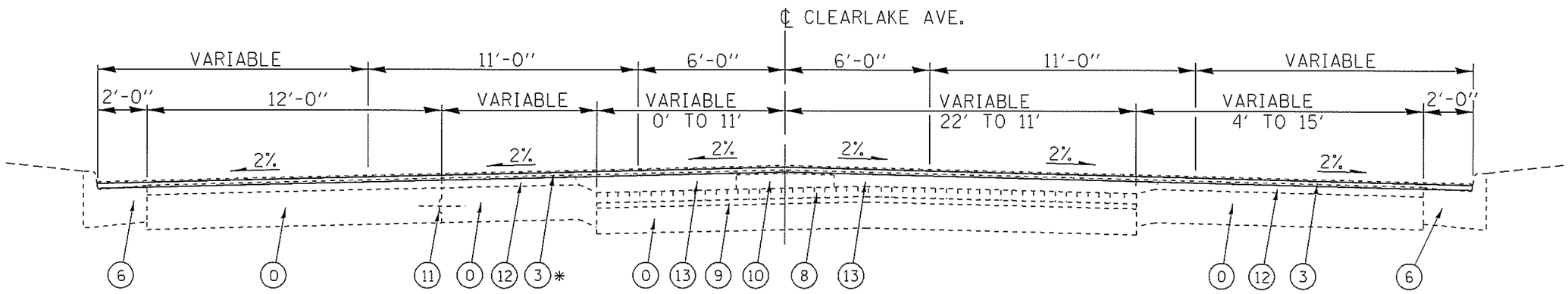

STA. 109+40.72 TO STA. 113+86.70

* EXISTING BIT. CONC. OVERLAY VARIES:
℄ = 2" DEPTH
E.O.P. = 1 1/2" DEPTH
FLOWLINE OF GUTTER = 2 1/2" DEPTH

LEGEND

0. P.C.C. BASE COURSE, 8"
1. P.C.C. BASE COURSE, 8", W/ BIT. CONC. CL I, 5 3/4"
2. BITUMINOUS CONCRETE SURFACE COURSE, CL I, 3"
3. BITUMINOUS CONCRETE SURFACE COURSE, 1 1/2" *
4. P.C.C. BASE COURSE WIDENING, 8"
5. EXPANSION TIE ANCHORS 3/4" DIA., 30" CTRS.
6. COMBINATION CONCRETE CURB & GUTTER, TYPE B-6.24
7. CONCRETE CURB, TYPE B
8. BRICK PAVEMENT, 4"
9. SAND CUSHION, 1"
10. CONCRETE MEDIAN, TYPE C-4
11. LONGITUDINAL CONSTRUCTION JOINT
12. BITUMINOUS CONCRETE SURFACE, 4"
13. LEVELING BINDER (MACHINE METHOD), VARIABLE DEPTH

FILE NAME = S:\CONTRMAINT_CAD\72L20 - D6 PATCHING SANG CO 2019\PLANS\72L20-sht-10-14-typicals-d6patching.dgn	USER NAME = nicholsonsl	DESIGNED - RTS	REVISED - RTS 04-09-09	STATE OF ILLINOIS DEPARTMENT OF TRANSPORTATION	TYPICAL CROSS SECTIONS CLEARLAKE AVENUE	F.A.P. RTE.	SECTION	COUNTY	TOTAL SHEETS	SHEET NO.
		DRAWN - RTS	REVISED -			VAR	D6 PATCHING SANG CO 2019	SANGAMON	30	12
	PLOT SCALE = 7.0000 ' / in.	CHECKED -	REVISED -					CONTRACT NO. 72L20		
	PLOT DATE = 3/28/2019	DATE - 09-25-08	REVISED -		SCALE: / SHEET NO. 3 OF 5 SHEETS / STA. / TO STA.	FED. ROAD DIST. NO.	ILLINOIS	FED. AID PROJECT		

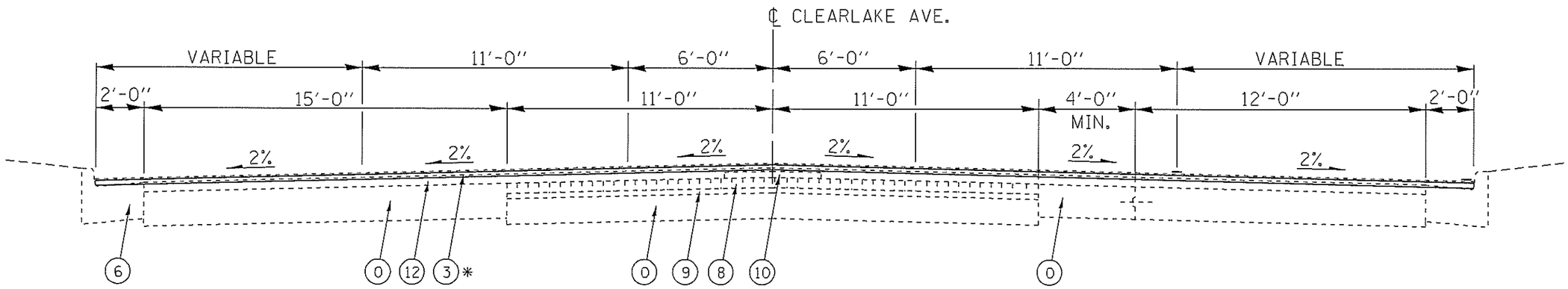

STA. 113+86.70 TO STA. 124+95.41

* EXISTING BIT. CONC. OVERLAY VARIES:
℄ = 2" DEPTH
E.O.P. = 1 1/2" DEPTH
FLOWLINE OF GUTTER = 2 1/2" DEPTH

LEGEND

0. P.C.C. BASE COURSE, 8"
1. P.C.C. BASE COURSE, 8", W/ BIT. CONC. CL I, 5 3/4"
2. BITUMINOUS CONCRETE SURFACE COURSE, CL I, 3"
3. BITUMINOUS CONCRETE SURFACE COURSE, 1 1/2" *
4. P.C.C. BASE COURSE WIDENING, 8"
5. EXPANSION TIE ANCHORS 3/4" DIA., 30" CTRS.
6. COMBINATION CONCRETE CURB & GUTTER, TYPE B-6.24
7. CONCRETE CURB, TYPE B
8. BRICK PAVEMENT, 4"
9. SAND CUSHION, 1"
10. CONCRETE MEDIAN, TYPE C-4
11. LONGITUDINAL CONSTRUCTION JOINT
12. BITUMINOUS CONCRETE SURFACE, 4"
13. LEVELING BINDER (MACHINE METHOD), VARIABLE DEPTH

FILE NAME = S:\CONTRMAINT_CAD\72L20 - D6 PATCHING SANG CO 2019\PLANS\72L20-sht-10-14-typicals-clearlake.dgn	USER NAME = nicholsonsl	DESIGNED - RTS	REVISED - RTS 04-09-09	STATE OF ILLINOIS DEPARTMENT OF TRANSPORTATION	TYPICAL CROSS SECTIONS CLEARLAKE AVENUE	F.A.P. RTE.	SECTION	COUNTY	TOTAL SHEETS	SHEET NO.
		DRAWN - RTS	REVISED -			VAR	D6 PATCHING SANG CO 2019	SANGAMON	30	13
	PLOT SCALE = 7.0000 ' / in.	CHECKED -	REVISED -					CONTRACT NO. 72L20		
	PLOT DATE = 3/28/2019	DATE - 09-25-08	REVISED -		SCALE: SHEET NO. 4 OF 5 SHEETS STA. TO STA.	FED. ROAD DIST. NO.	ILLINOIS	FED. AID PROJECT		

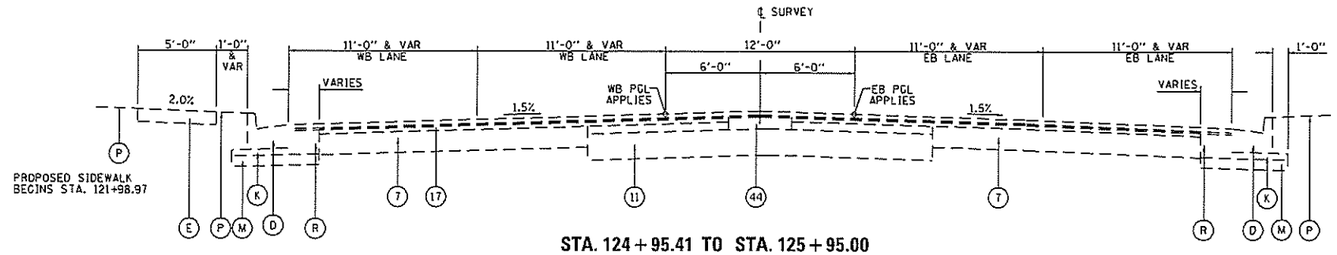

STA. 124 + 95.41 TO STA. 125 + 95.00

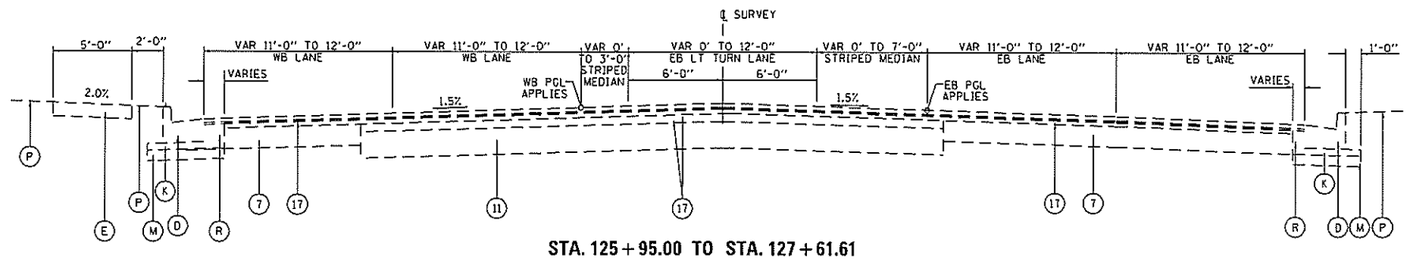

STA. 125 + 95.00 TO STA. 127 + 61.61

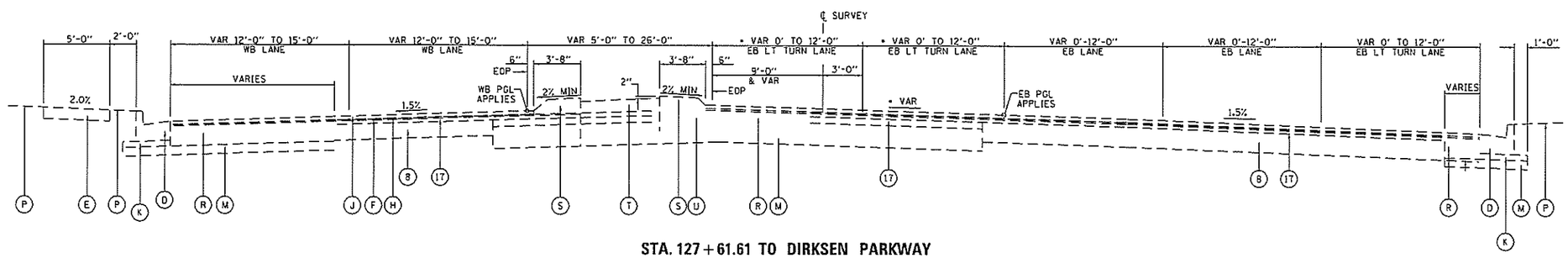

STA. 127 + 61.61 TO DIRKSEN PARKWAY

* CROSS SLOPE VARIES. SEE INTERSECTION GEOMETRIC PLAN FOR ELEVATIONS.

LEGEND

- (4) EXISTING SAND FILL
- (7) EXISTING PCC BASE COURSE, 8"
- (8) EXISTING PCC BASE COURSE, 9"
- (11) EXISTING PAVEMENT, VARIABLE COMPOSITION, 8"
- (17) EXISTING BITUMINOUS CONCRETE SURFACE, 2"
- (18) EXISTING PCC MEDIAN SURFACE, 4"
- (22) EXISTING COMBINATION CONCRETE CURB & GUTTER, TY. M-6.06
- (28) EXISTING COMBINATION CONCRETE CURB & GUTTER, TY. B-6.24
- (44) EXISTING CONCRETE MEDIAN (PARTIALLY REMOVED)
- (D) EXISTING COMBINATION CONCRETE CURB & GUTTER, TYPE B-6.24
- (E) EXISTING SIDEWALK, 4"
- (K) EXISTING SUB-BASE GRANULAR MATERIAL, TYPE C
- (M) EXISTING SUB-BASE GRANULAR MATERIAL, TYPE A, 8"
- (P) SODDING
- (R) EXISTING HOT-MIX ASPHALT BASE COURSE, 11¾"
- (S) EXISTING CONCRETE MEDIAN TYPE SM-6 (DOWELLED)
- (T) EXISTING TOP SOIL FOR PLANTING
- (U) EXISTING PORTLAND CEMENT CONCRETE BASE COURSE, 11¾" (SEE DETAIL)

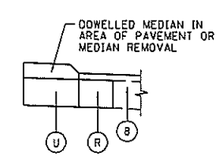

PCC BASE COURSE DETAIL

FILE NAME = S:\CONTRMAINT.CAD\72L20 - DB PATCHING SANG CO 2019\PLANS\72L20-sht-10-14-typicals-sht.dgn	USER NAME = nicholsonsl	DESIGNED - RTS	REVISED - RTS 04-09-09	STATE OF ILLINOIS DEPARTMENT OF TRANSPORTATION	TYPICAL CROSS SECTIONS CLEARLAKE AVENUE	F.A.P. RTE.	SECTION	COUNTY	TOTAL SHEETS	SHEET NO.
		DRAWN - RTS	REVISED -			VAR	DB PATCHING SANG CO 2019	SANGAMON	30	14
	PLOT SCALE = 7.0000 ' / in.	CHECKED -	REVISED -					CONTRACT NO. 72L20		
	PLOT DATE = 3/28/2019	DATE - 09-25-08	REVISED -		SCALE: / SHEET NO. 5 OF 5 SHEETS / STA. / TO STA.	FED. ROAD DIST. NO.	ILLINOIS	FED. AID PROJECT		

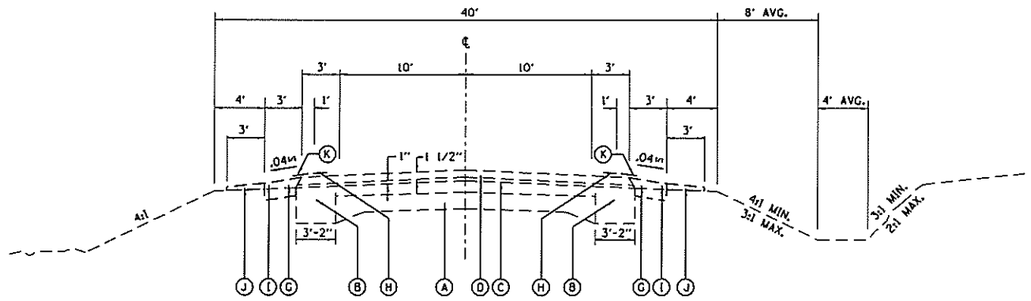

	236+00	TO	291+00		14+33	TO	14+85
LT	291+00	TO	291+64		24+34	TO	39+17
LT	300+68	TO	304+00		51+00	TO	RT 87+70
	304+00	TO	313+30		51+00	TO	LT 88+08
LT	313+30	TO	314+35	RT	97+10	TO	101+00
RT	320+14	TO	326+34	LT	97+36	TO	101+00
	326+34	TO	328+45		101+00	TO	104+05
	328+45	TO	330+55		105+41	TO	106+08
LT	330+55	TO	331+23.59	RT	106+08	TO	107+08
LT	332+31	TO	333+00		114+00	TO	129+45
	333+00	TO	337+89		148+43	TO	198+57
LT	347+50	TO	348+25		213+36	TO	225+00
	348+25	TO	380+00				
	380+00	TO	444+50				

TANGENT SECTION

BRIDGE OMISSION

104+05 TO 105+41
331+23.59 TO 332+31.76
456+47 TO 457+41

"RUMBLE STRIP"

TOWN OF SALISBURY OMISSION

291+00 TO 308+00

LEGEND

- (A) EX PCC PAVT (9"-6 1/2" - 9") & BIT CONC SURF
- (B) EX BIT CONC BASE CRSE WIDENING 9"
- (C) EX LEVELING BINDER MACHINE METHOD 1"
- (D) EX BIT CONC SURF CRSE MIX D CLASS I - 1 1/2"
- (E) EX BITUMINOUS SHOULDER 8"
- (F) EX CONCRETE GUTTER, TYPE A
- (G) EX AGGREGATE SHOULDERS, TYPE A
- (H) EX PAINT PAVEMENT MARKING - LINE 5"
- (I) EX HMA SHOULDER 8"
- (J) EX AGGREGATE SHOULDER, TY B
- (K) EX SHOULDER RUMBLE STRIP (SEE DETAIL)

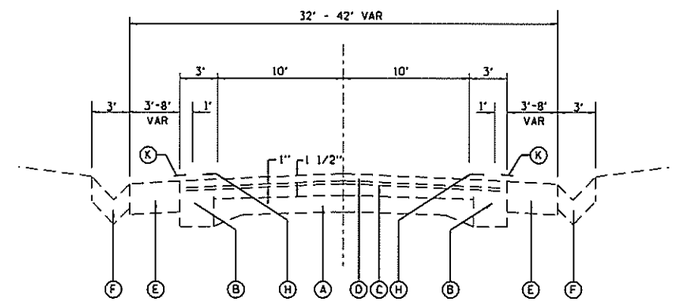

	RT 87+70	TO	97+10
	LT 88+08	TO	97+36
	LT 106+08	TO	107+08
RT &	LT 107+08	TO	111+62
	LT 111+62	TO	113+62
	RT 313+30	TO	320+14
	LT 314+35	TO	326+34
	RT 330+55	TO	331+23.59
	RT 332+31	TO	333+00

WHEN THE SUPER ELEVATION RATE OF THE PAVEMENT IS BETWEEN 0% AND 4%, THE SHOULDER SHALL BE SLOPED AT 4%.
WHEN THE SUPER ELEVATION RATE OF THE PAVEMENT EXCEEDS 4%, THE SHOULDER SHALL BE SLOPED SO THAT THE ALGEBRAIC DIFFERENCE BETWEEN PAVEMENT AND SHOULDER WILL NOT BE GREATER THAN 8%.
(OUTSIDE OF CURVE)

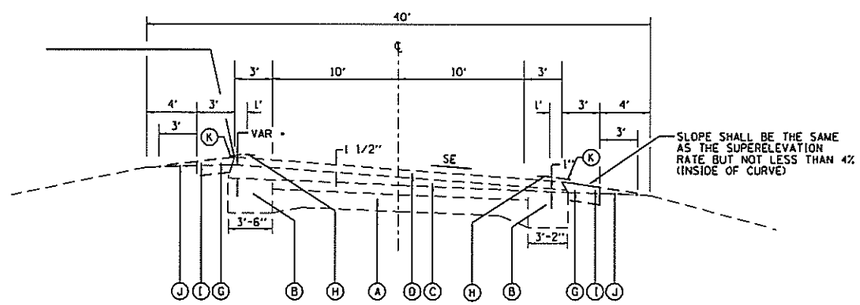

14+85	TO	24+34
39+17	TO	51+00
129+45	TO	148+43
198+57	TO	213+36
225+00	TO	236+00

SUPER ELEVATED SECTION

FILE NAME = S:\CONTRMAINT_CAD\72L20 - DB PATCHING SANG CO 2019\PLANS\72L20-sht-15-16-typicals-1.dgn	USER NAME = nicholsonsl	DESIGNED -	REVISED -	STATE OF ILLINOIS DEPARTMENT OF TRANSPORTATION	TYPICAL CROSS SECTIONS IL 97	F.A.P. RTE.	SECTION	COUNTY	TOTAL SHEETS	SHEET NO.
		DRAWN -	REVISED -			VAR	DB PATCHING SANG CO 2019	SANGAMON	30	15
	PLOT SCALE = 120.0000 ' / in.	CHECKED -	REVISED -					CONTRACT NO. 72L20		
Default	PLOT DATE = 3/28/2019	DATE -	REVISED -		SCALE: SHEET 1 OF 2 SHEETS STA. TO STA.		ILLINOIS FED. AID PROJECT			

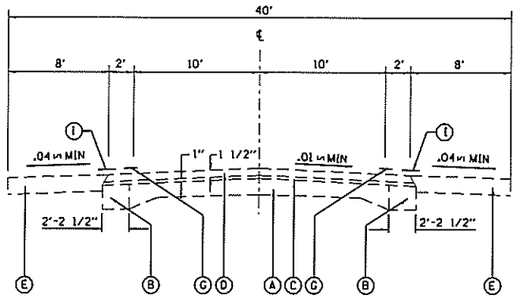

RT 111+62	TO	113+62
113+62	TO	114+00
243+68.15 (AH)	TO	320+60
337+89	TO	347+50
RT 347+50	TO	348+25

"RUMBLE STRIP"

TOWN OF SALISBURY
OMISSION

291+00 TO 308+00

LEGEND

- (A) EX PCC PAVT (9"-6 1/2" - 9") & BIT CONC SURF
- (B) EX BIT CONC BASE CRSE WIDENING 9"
- (C) EX LEVELING BINDER MACHINE METHOD 1"
- (D) EX BIT CONC SURF CRSE MIX D CLASS I - 1 1/2"
- (E) EX BITUMINOUS SHOULDER 8"
- (F) EX AGGREGATE SHOULDERS, TYPE A
- (G) EX PAINT PAVEMENT MARKING - LINE 5"
- (H) EX CONCRETE GUTTER TY A (MODIFIED)
- (I) EX SHOULDER RUMBLE STRIP (SEE DETAIL)

RUMBLE STRIP DETAIL

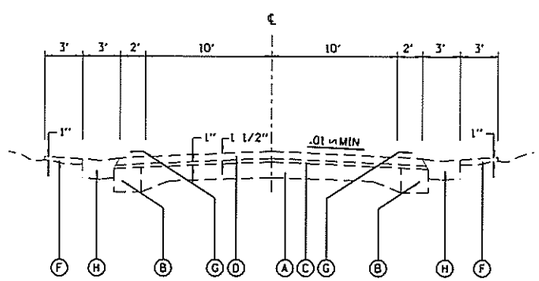

STA 291+64 TO 300+68 LT
291+00 TO 304+00 RT

STATION EQUATION 296+12.5 BK = 290+76.1 AH

* SEE CURVE DATA FOR SE STA 291±00 TO 296±00

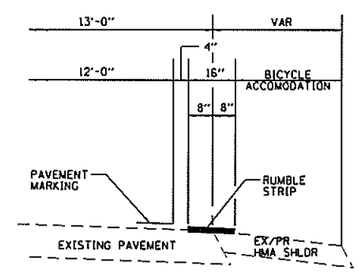

OMIT SHOULDER RUMBLE STRIPS ACROSS
STRUCTURES & SIDE ROAD/ENTRANCES
AND THROUGH SALISBURY

FILE NAME = S:\CONTRMAINT_CAD\72L20 - D6 PATCHING SANG CO 2019\PLANS\72L20-sht-15-16-typicals-1.dgn	USER NAME = nicholsonsl	DESIGNED -	REVISED -
		DRAWN -	REVISED -
	PLOT SCALE = 120.0000 ' / in.	CHECKED -	REVISED -
Default	PLOT DATE = 3/28/2019	DATE -	REVISED -

STATE OF ILLINOIS
DEPARTMENT OF TRANSPORTATION

TYPICAL CROSS SECTIONS
IL 97

SCALE: | SHEET 2 OF 2 SHEETS | STA. TO STA.

F.A.P. RTE.	SECTION	COUNTY	TOTAL SHEETS	SHEET NO.
VAR	D6 PATCHING SANG CO 2019	SANGAMON	30	16
		CONTRACT NO. 72L20		
		ILLINOIS FED. AID PROJECT		

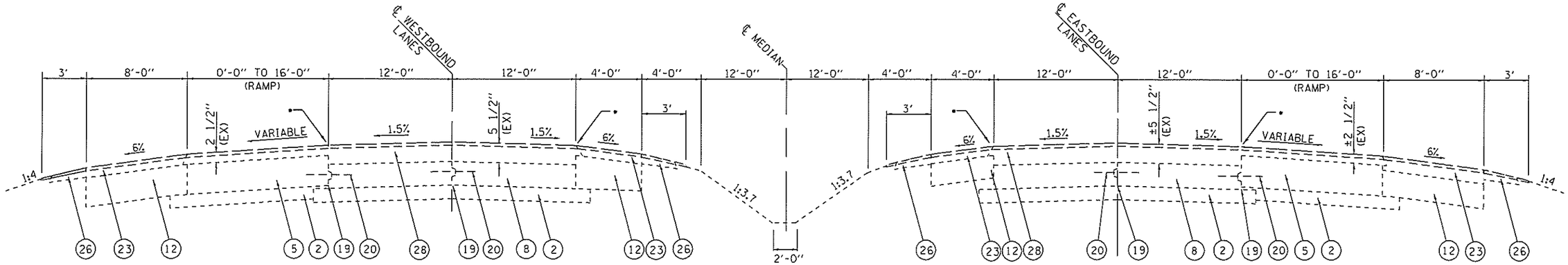

STA. 27+72.12 TO STA. 31+19.90
STA. 36+74.34 TO STA. 43+50.21
STA. 49+24.35 TO STA. 59+64.38

NOTE: STATIONS ARE APPROXIMATED.

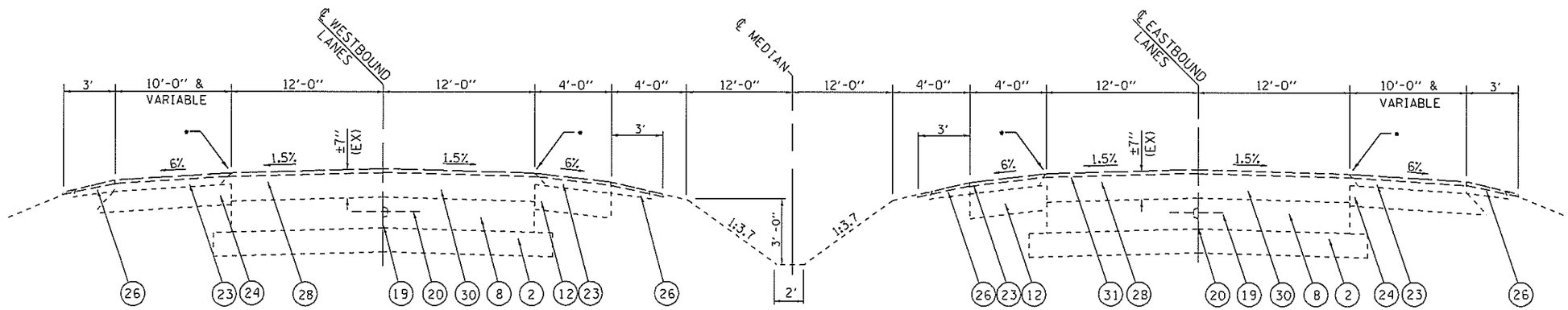

STA. 31+19.90 TO STA. 36+74.34
STA. 43+50.21 TO STA. 49+24.35
STA. 59+64.38 TO STA. 66+50.58
STATION EQUATION:
STA. 66+50.58 (BACK) = STA. 49+55.50 (AHEAD)
STA. 49+55.50 TO STA. 50+59.98

LEGEND

1 EXISTING STABILIZED SUB-BASE, 4"
2 EXISTING STABILIZED SUB-BASE GRANULAR MATERIAL, TYPE A 8"
5 EXISTING P.C.C. PAVEMENT, 10"
6 EXISTING CONTINUOUSLY REINFORCED P.C.C. PAVEMENT, 7"
8 EXISTING P.C.C. BASE COURSE, 9"
12 EXISTING STABILIZED BITUMINOUS SHOULDER, 8"
13 EXISTING STABILIZED B.A.M. SHOULDER
19 EXISTING LONGITUDINAL METAL JOINT
20 EXISTING 1/2" Ø DEFORMED BAR @ 2'-6" CENTERS
23 EXISTING BITUMINOUS SHOULDERS
24 EXISTING AGGREGATE SHOULDERS
26 EXISTING AGGREGATE SHOULDERS, TYPE B
28 EXISTING HMA OVERLAY, 3.75"
30 EXISTING LONG. METAL JOINT
31 EXISTING 1/2" DOWEL BAR @ 30" CENTERS

FILE NAME = S:\CONTRMAINT_CAD\72L20 - 06 PATCHING SANG CO 2019\PLANS\72L20-sht-17-26-typicals-01.dgn	USER NAME = nicholsonsl	DESIGNED -	REVISED -	STATE OF ILLINOIS DEPARTMENT OF TRANSPORTATION	TYPICAL CROSS SECTIONS IL 29	F.A.P. RTE.	SECTION	COUNTY	TOTAL SHEETS	SHEET NO.
		DRAWN -	REVISED -			VAR	06 PATCHING SANG CO 2019	SANGAMON	30	17
	PLOT SCALE = 4200.0000 ' / in.	CHECKED -	REVISED -					CONTRACT NO. 72L20		
Default	PLOT DATE = 3/28/2019	DATE -	REVISED -		SCALE: SHEET 1 OF 10 SHEETS STA. TO STA.			ILLINOIS FED. AID PROJECT		

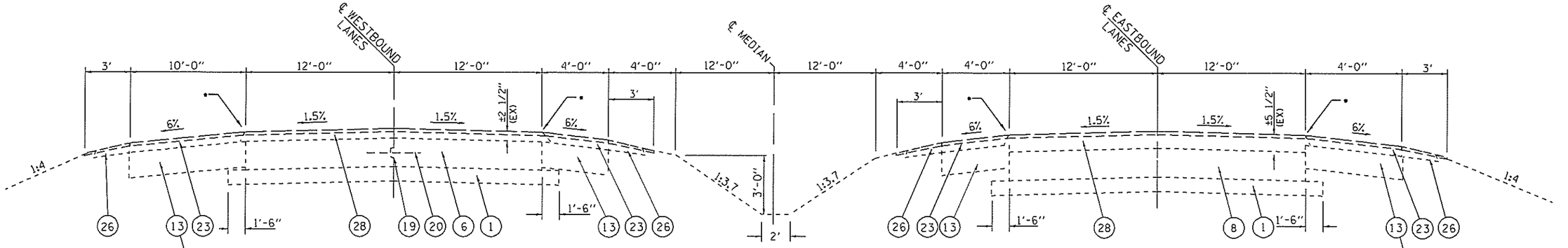

WESTBOUND LANES

STA. 50+59.98 TO STA. 51+10
STA. 76+00 TO STA. 81+01.31

NOTE:
THE EXISTING SURFACE CONSISTS OF A ±5" BITUMINOUS OVERLAY AT:
61+74.74 TO 64+44.49
77+30.58 TO 81+01.31

EASTBOUND LANES

STA. 50+59.98 TO STA. 51+10
STA. 76+00 TO STA. 81+01.31

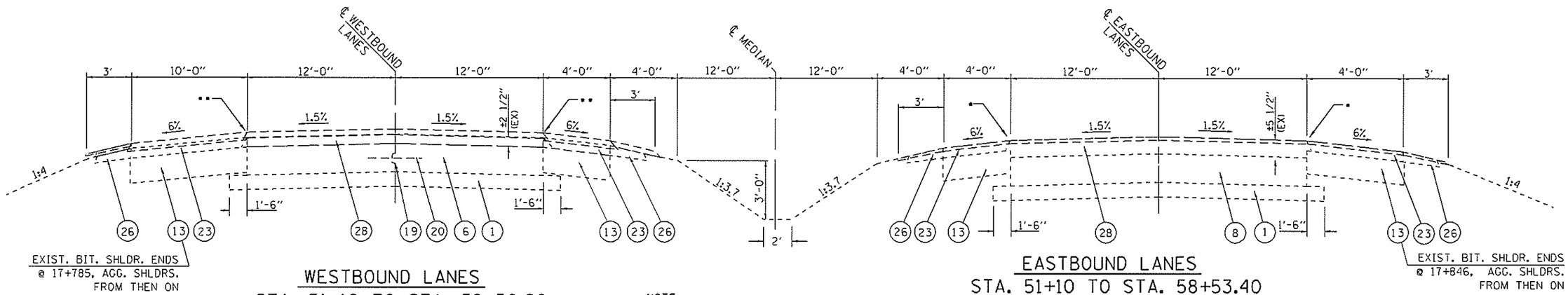

WESTBOUND LANES

STA. 51+10 TO STA. 58+50.90
(BRIDGE OMISSION: 58+53.29 TO 61+74.74)
STA. 61+75.96 TO STA. 76+00

NOTE:
THE EXISTING SURFACE CONSISTS OF A ±5" BITUMINOUS OVERLAY AT:
61+74.74 TO 64+44.49
77+30.58 TO 81+01.31

EASTBOUND LANES

STA. 51+10 TO STA. 58+53.40
(BRIDGE OMISSION: 58+54.69 TO 61+74.74)
STA. 61+75.40 TO STA. 76+00

LEGEND

1 EXISTING STABILIZED SUB-BASE, 4"
4 EXISTING P.C.C. PAVEMENT (9"-6"-9")
6 EXISTING CONTINUOUSLY REINFORCED P.C.C. PAVEMENT, 7"
8 EXISTING P.C.C. BASE COURSE, 9"
13 EXISTING STABILIZED B.A.M. SHOULDER
19 EXISTING LONGITUDINAL METAL JOINT
20 EXISTING 1/2" Ø DEFORMED BAR @ 2'-6" CENTERS
21 EXISTING 3/4" Ø SMOOTH BAR
23 EXISTING HMA SHOULDERS 2" MIN
25 EXISTING AGGREGATE SHOULDERS, TYPE A, 6"
26 EXISTING AGGREGATE SHOULDERS, TYPE B
28 EXISTING HMA OVERLAY

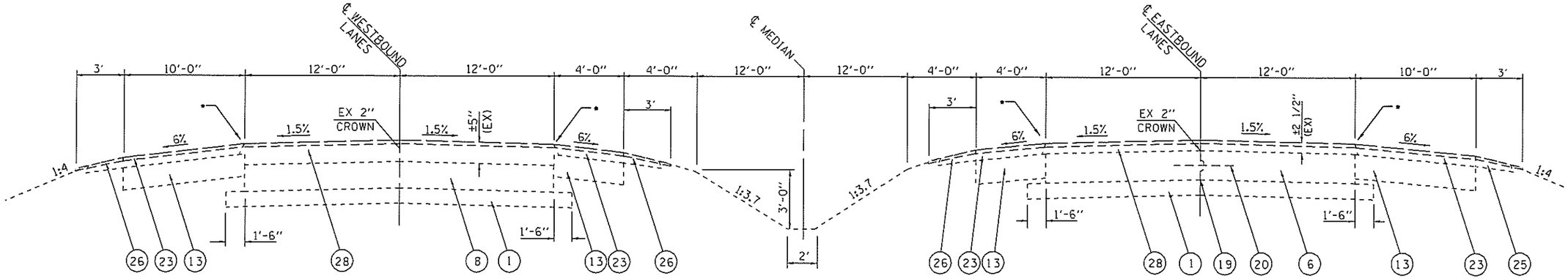

WESTBOUND LANES

STA. 81+01.31 TO STA. 91+48.64
STA. 204+00 TO STA. 209+59.65
STA. 209+59.65 BK TO STA. 209+44.28 AH
STA. 209+44.28 TO STA. 211+06.92

EASTBOUND LANES

STA. 81+01.31 TO STA. 86+13.47
STA. 93+62.29 TO STA. 94+50
STA. 159+22.64 TO STA. 204+00
STA. 204+00 TO STA. 209+59.65
STA. 209+59.65 BK TO STA. 209+44.28 AH
STA. 209+44.28 TO STA. 211+06.92

NOTE:
THE EXISTING SURFACE CONSISTS OF A ±5" BITUMINOUS OVERLAY AT:
152+85.69 TO 154+93.76
159+20.44 TO 161+20.66

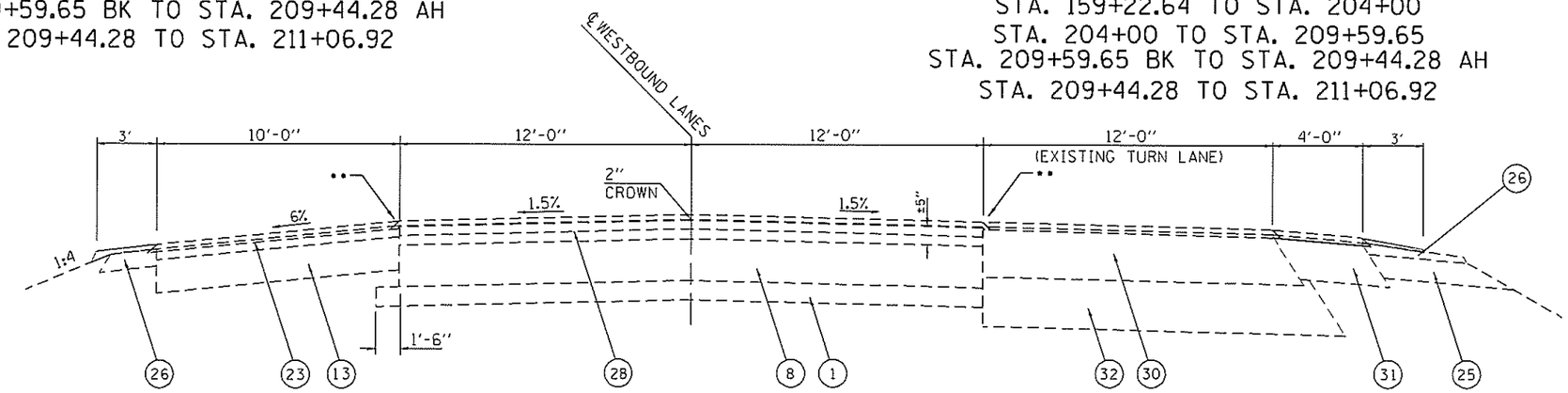

HILLTOP ROAD TURN LANE; WESTBOUND LANE

STA. 91+48.64 TO STA. 94+50

LEGEND

1 EXISTING STABILIZED SUB-BASE, 4"
4 EXISTING P.C.C. PAVEMENT (9"-6"-9")
6 EXISTING CONTINUOUSLY REINFORCED P.C.C. PAVEMENT, 7"
8 EXISTING P.C.C. BASE COURSE, 9"
13 EXISTING STABILIZED B.A.M. SHOULDER
19 EXISTING LONGITUDINAL METAL JOINT
20 EXISTING 1/2" Ø DEFORMED BAR @ 2'-6" CENTERS
21 EXISTING 3/4" Ø SMOOTH BAR
23 EXISTING HMA SHOULDERS 2" MIN
25 EXISTING AGGREGATE SHOULDERS, TYPE A, 6"
26 EXISTING AGGREGATE SHOULDERS, TYPE B
28 EXISTING HMA OVERLAY
30 EXISTING BITUMINOUS BASE COURSE, 10"
31 EXISTING BITUMINOUS SHOULDERS, APPROX. DEPTH 10"
32 EXISTING SUB-BASE GRANULAR MATERIAL, 12"

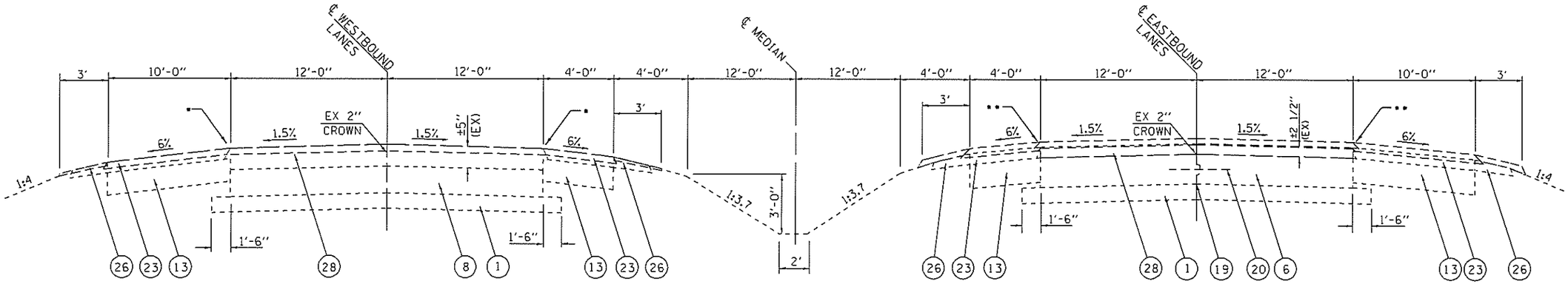

WESTBOUND LANES

STA. 98+60.67 TO STA. 113+89.34

STATION EQUATION:

STA. 113+89.34 (BK) = STA. 114+08.37 (AH)

STA. 114+08.37 TO STA. 154+96.25

(BRIDGE OMISSION: 154+97.13 TO 159+20.44)

STA. 159+21.25 TO STA. 204+00

EASTBOUND LANES

STA. 94+50 TO STA. 113+89.34

STATION EQUATION:

STA. 113+89.34 (BK) = STA. 114+08.37 (AH)

STA. 114+08.37 TO STA. 154+93.37

(BRIDGE OMISSION: 154+93.76 TO 159+20.44)

STA. 159+22.64 TO STA. 204+00

NOTE:
THE EXISTING SURFACE CONSISTS OF A ±5" BITUMINOUS OVERLAY AT:
152+85.69 TO 154+93.76
159+20.44 TO 161+20.66

LEGEND

1 EXISTING STABILIZED SUB-BASE, 4"
2 EXISTING STABILIZED SUB-BASE GRANULAR MATERIAL, TYPE A 8"
6 EXISTING CONTINUOUSLY REINFORCED P.C.C. PAVEMENT, 7"
8 EXISTING P.C.C. BASE COURSE, 9"
12 EXISTING STABILIZED BITUMINOUS SHOULDER, 8"
13 EXISTING STABILIZED B.A.M. SHOULDER
19 EXISTING LONGITUDINAL METAL JOINT
20 EXISTING 1/2" Ø DEFORMED BAR @ 2'-6" CENTERS
23 EXISTING HMA SHOULDERS 2" MIN
24 EXISTING AGGREGATE SHOULDERS
26 EXISTING AGGREGATE SHOULDERS, TYPE B
28 EXISTING HMA OVERLAY

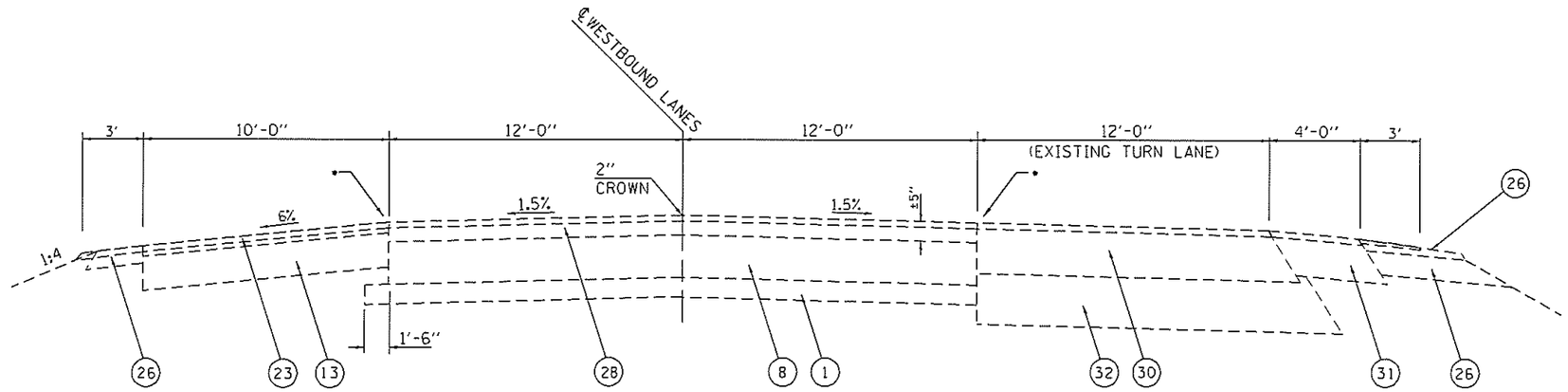

HILLTOP ROAD TURN LANE; WESTBOUND LANE

STA. 94+50 TO STA. 98+60.67

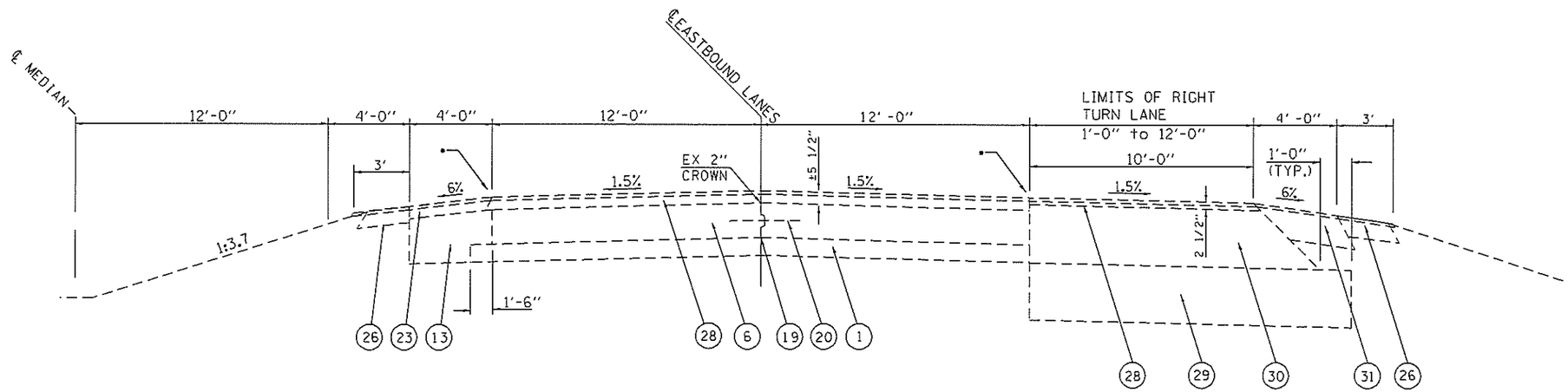

HILLTOP ROAD TURN LANE; EASTBOUND LANE

STA. 86+13.47 TO STA. 93+62.29

LEGEND

1 EXISTING STABILIZED SUB-BASE, 4"
2 EXISTING STABILIZED SUB-BASE GRANULAR MATERIAL, TYPE A 8"
6 EXISTING CONTINUOUSLY REINFORCED P.C.C. PAVEMENT, 7"
8 EXISTING P.C.C. BASE COURSE, 9"
12 EXISTING STABILIZED BITUMINOUS SHOULDER, 8"
13 EXISTING STABILIZED B.A.M. SHOULDER
19 EXISTING LONGITUDINAL METAL JOINT
20 EXISTING 1/2" Ø DEFORMED BAR @ 2'-6" CENTERS
23 EXISTING HMA SHOULDERS 2" MIN
24 EXISTING AGGREGATE SHOULDERS
26 EXISTING AGGREGATE SHOULDERS, TYPE B
28 EXISTING HMA OVERLAY
29 EXISTING AGGREGATE BASE COURSE, TYPE A, 12"
30 EXISTING BITUMINOUS BASE COURSE, 10"
31 EXISTING HMA, APPROX. DEPTH 10"
32 EXISTING SUB-BASE GRANULAR MATERIAL, 12"

FILE NAME = S:\CONTRMAINT_CAD\72L20 - D6 PATCHING SANG CO 2019\PLANS\72L20-sht-17-26-typicals-1.dgn	USER NAME = nicholsonsl	DESIGNED -	REVISED -	STATE OF ILLINOIS DEPARTMENT OF TRANSPORTATION	TYPICAL CROSS SECTIONS IL 29	F.A.P. RTE.	SECTION	COUNTY	TOTAL SHEETS	SHEET NO.
		DRAWN -	REVISED -			VAR	D6 PATCHING SANG CO 2019	SANGAMON	30	21
	PLOT SCALE = 4200.0000 ' / in.	CHECKED -	REVISED -					CONTRACT NO. 72L20		
Default	PLOT DATE = 3/28/2019	DATE -	REVISED -		SCALE: SHEET 5 OF 10 SHEETS STA. TO STA.			ILLINOIS FED. AID PROJECT		

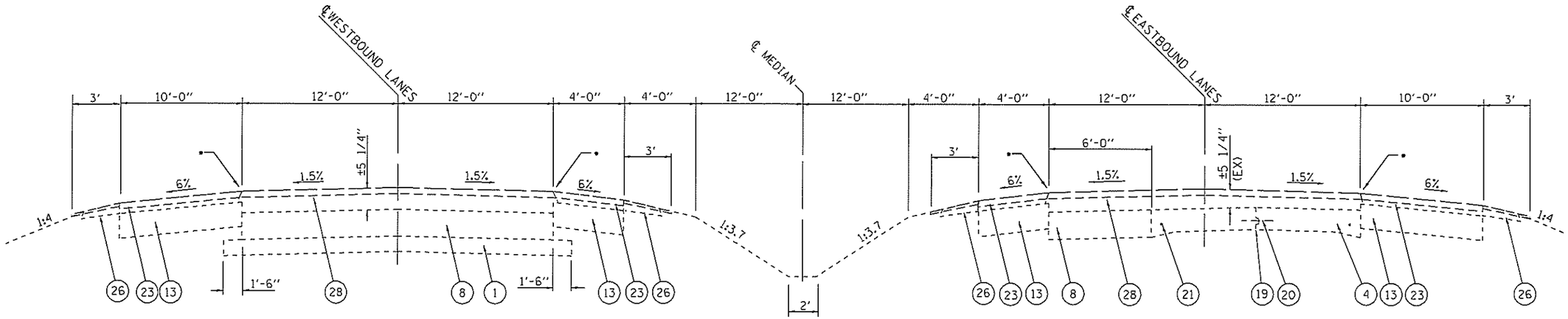

STA. 211+06.92 TO STA. 221+28.51

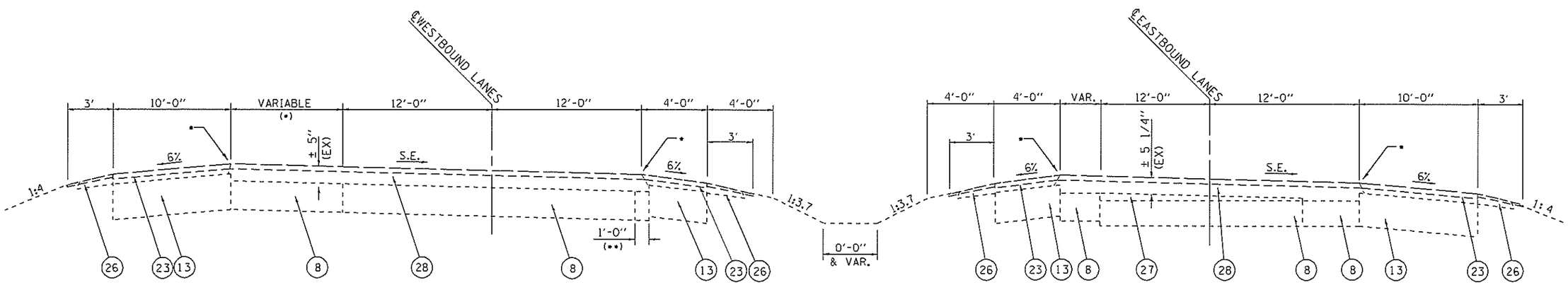

EXISTING P.C.C. BASE COURSE WIDENING
NORTHWEST BOUND LANES:
* - 12+497.000 TO 12+541.620
** - 12+541.620 TO 12+640.619

STA. 221+28.51 TO STA. 225+99.69

LEGEND

1 EXISTING STABILIZED SUB-BASE, 4"
2 EXISTING STABILIZED SUB-BASE GRANULAR MATERIAL, TYPE A 8"
6 EXISTING CONTINUOUSLY REINFORCED P.C.C. PAVEMENT, 7"
8 EXISTING P.C.C. BASE COURSE, 9"
12 EXISTING STABILIZED BITUMINOUS SHOULDER, 8"
13 EXISTING STABILIZED B.A.M. SHOULDER
19 EXISTING LONGITUDINAL METAL JOINT
20 EXISTING 1/2" Ø DEFORMED BAR @ 2'-6" CENTERS
23 EXISTING HMA SHOULDERS 2" MIN
24 EXISTING AGGREGATE SHOULDERS
26 EXISTING AGGREGATE SHOULDERS, TYPE B
27 EXISTING HMA LEVELING BINDER - VARIABLE DEPTH
28 EXISTING HMA OVERLAY +/- 5"

FILE NAME = S:\CONTRMAINT_CAD\72L20 - 06 PATCHING SANG CO 2019\PLANS\72L20-sht-17-26-typicals-1.dgn	USER NAME = nicholsonsl	DESIGNED -	REVISED -	STATE OF ILLINOIS DEPARTMENT OF TRANSPORTATION	TYPICAL CROSS SECTIONS IL 29	F.A.P. RTE.	SECTION	COUNTY	TOTAL SHEETS	SHEET NO.
	PLOT SCALE = 4200.0000 ' / in.	DRAWN -	REVISED -			VAR	06 PATCHING SANG CO 2019	SANGAMON	30	22
	PLOT DATE = 3/28/2019	CHECKED -	REVISED -					CONTRACT NO. 72L20		
Default		DATE -	REVISED -		SCALE: SHEET 6 OF 10 SHEETS STA. TO STA.			ILLINOIS FED. AID PROJECT		

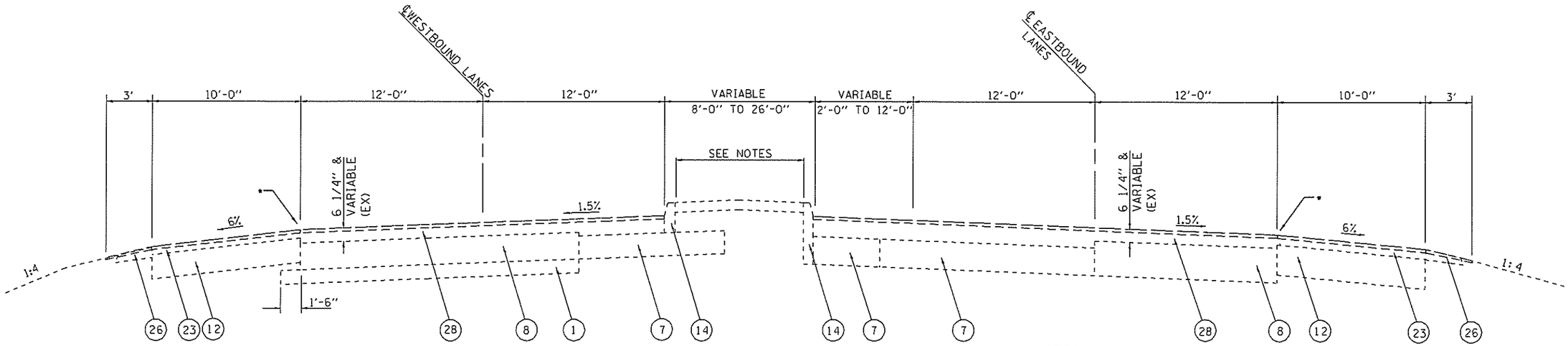

STA. 225.+99.69 TO STA. 230+39.33

NOTES:

NO MEDIAN @:
12+363.000 TO 12+375.000
CONCRETE MEDIAN @:
12+375.000 TO 12+456.000
EARTH MEDIAN @:
12+456.000 TO 12+497.000

THE BITUMINOUS CONCRETE WEDGE SHALL BE CONSTRUCTED SIMULTANEOUSLY WITH THE BINDER PLACEMENT ON THE MAINLINE PAVEMENT. (STD. SPEC. 406.20)

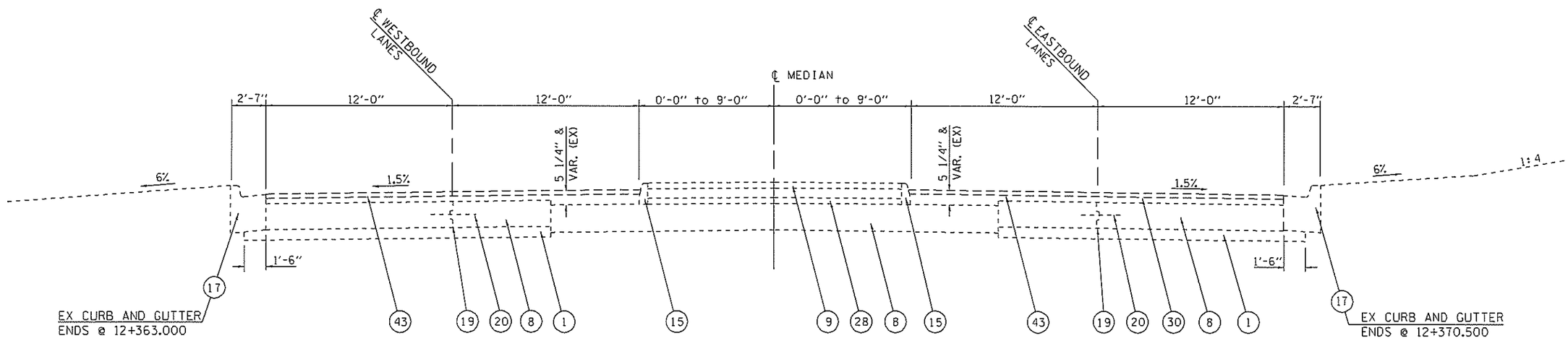

STA. 230+39.33 TO STA. 232+46.02

LEGEND

1 EXISTING STABILIZED SUB-BASE, 4"
7 EXISTING P.C.C. BASE COURSE, 8"
8 EXISTING P.C.C. BASE COURSE, 9"
12 EXISTING STABILIZED BITUMINOUS SHOULDER, 8"
13 EXISTING STABILIZED B.A.M. SHOULDER
14 EXISTING CONCRETE CURB
23 EXISTING HMA SHOULDERS (DEPTH UNKNOWN)
26 EXISTING AGGREGATE SHOULDERS, TYPE B
27 EXISTING HMA LEVELING BINDER
28 EXISTING HMA OVERLAY +/- 6"
29 EXISTING HMA OVERLAY +/- 5"

FILE NAME = S:\CONTRMAINT.CAD\72L20 - 06 PATCHING SANG CO 2019\PLANS\72L20-sht-17-26-typicals-1.dgn	USER NAME = nicholsonsl	DESIGNED -	REVISED -	STATE OF ILLINOIS DEPARTMENT OF TRANSPORTATION	TYPICAL CROSS SECTIONS IL 29	F.A.P. RTE.	SECTION	COUNTY	TOTAL SHEETS	SHEET NO.
		DRAWN -	REVISED -			VAR	06 PATCHING SANG CO 2019	SANGAMON	30	23
	PLOT SCALE = 4200.0000 ' / in.	CHECKED -	REVISED -					CONTRACT NO. 72L20		
Defaults	PLOT DATE = 3/28/2019	DATE -	REVISED -		SCALE: SHEET 7 OF 10 SHEETS STA. TO STA.		ILLINOIS FED. AID PROJECT			

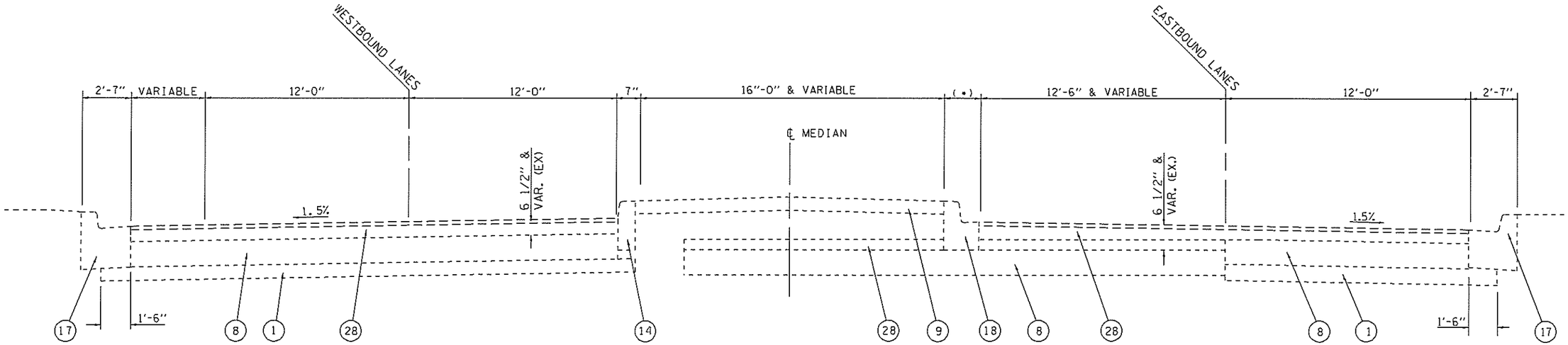

(•) - EXISTING MEDIAN C & G (TYPE B-9.12) AT:
12+223.024 TO 12+352.451 LT.
12+233.454 TO 12+260.381 RT.

STA. 232+46.02 TO STA. 234+00.17

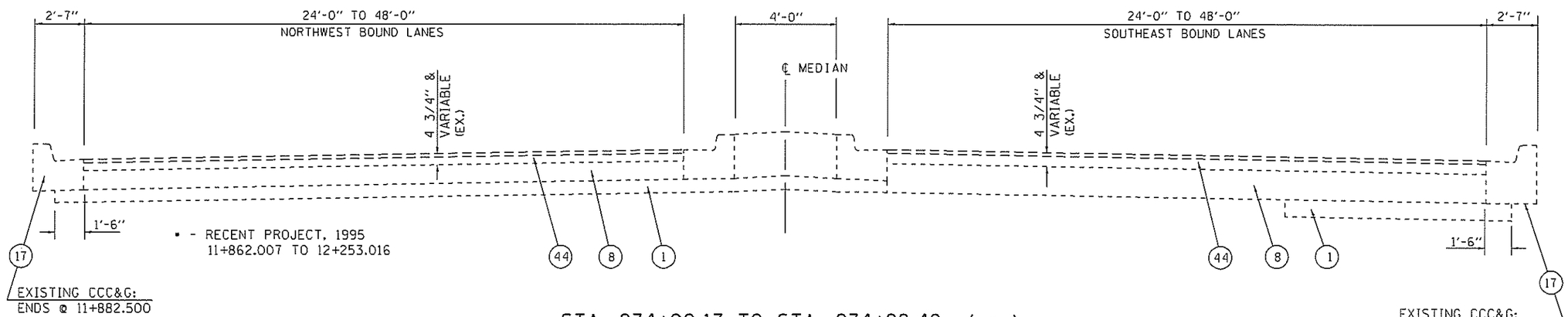

• - RECENT PROJECT, 1995
11+862.007 TO 12+253.016

EXISTING CCC&G:
ENDS @ 11+882.500

EXISTING CCC&G:
BEGINS @ 12+032.000
ENDS @ 12+143.000

STA. 234+00.17 TO STA. 234+98.40 (•)
STATION EQUATION:
234+98.40 (BACK) = 0+00.00 (AHEAD)
STA. 0+00.00 TO STA. 11+83.97

LEGEND

1 EXISTING STABILIZED SUB-BASE, 4"
8 EXISTING P.C.C. BASE COURSE, 9"
9 EXISTING P.C.C. MEDIAN SURFACE, 4"
14 EXISTING CONCRETE CURB
15 EXISTING CONCRETE CURB, TYPE B, SPECIAL
17 EXISTING COMBINATION CONCRETE CURB & GUTTER, TYPE B-6.24
18 EXISTING COMBINATION CONCRETE CURB & GUTTER, TYPE B-9.12
19 EXISTING LONGITUDINAL METAL JOINT
20 EXISTING 1/2" Ø DEFORMED BAR @ 2'-6" CENTERS
28 EXISTING HMA OVERLAY +/- 6.5"
44 EXISTING HMA OVERLAY +/- 4.75"

FILE NAME = S:\CONTRMAINT_CAD\72L20 - D6 PATCHING SANG CO 2019\PLANS\72L20-sht-17-26-typicals-1.dgn	USER NAME = nicholsonsl	DESIGNED -	REVISED -	STATE OF ILLINOIS DEPARTMENT OF TRANSPORTATION	TYPICAL CROSS SECTIONS IL 29	F.A.P. RTE.	SECTION	COUNTY	TOTAL SHEETS	SHEET NO.
		DRAWN -	REVISED -			VAR	D6 PATCHING SANG CO 2019	SANGAMON	30	24
	PLOT SCALE = 4200.0000 ' / in.	CHECKED -	REVISED -					CONTRACT NO. 72L20		
Default	PLOT DATE = 3/28/2019	DATE -	REVISED -		SCALE: SHEET 8 OF 10 SHEETS STA. TO STA.		ILLINOIS FED. AID PROJECT			

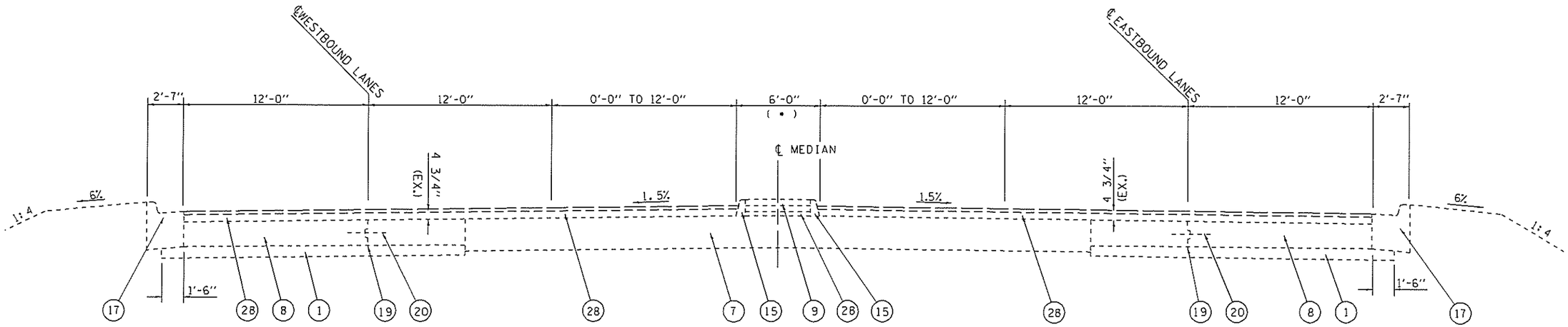

• - MEDIAN BEGINS AT 11+741.000

STA. 11+83.97 TO STA. 16+87.93

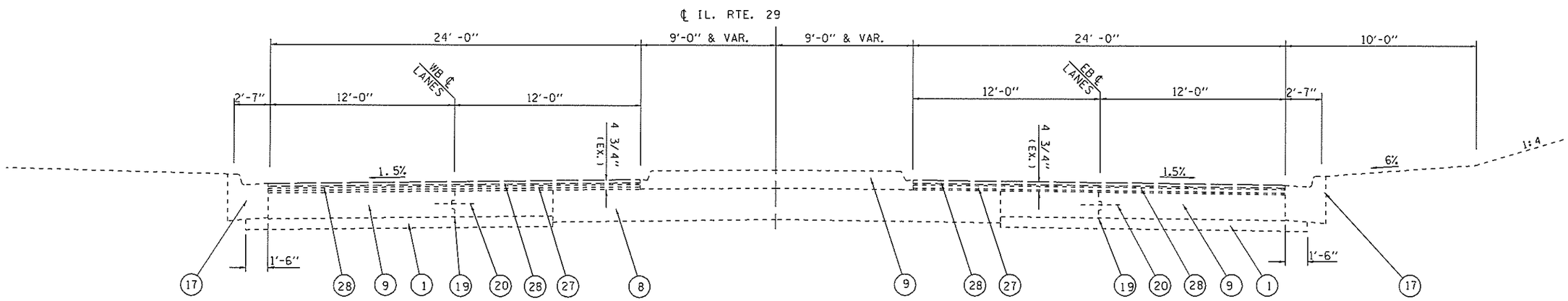

STA. 16+87.93 TO STA. 17+94.93

LEGEND

1 EXISTING STABILIZED SUB-BASE, 4"
7 EXISTING P.C.C. BASE COURSE, 8"
8 EXISTING P.C.C. BASE COURSE, 9"
9 EXISTING P.C.C. MEDIAN SURFACE, 4"
15 EXISTING CONCRETE CURB, TYPE B, SPECIAL
17 EXISTING COMBINATION CONCRETE CURB & GUTTER, TYPE B-6.24
19 EXISTING LONGITUDINAL METAL JOINT
20 EXISTING 1/2" Ø DEFORMED BAR @ 2'-6" CENTERS
27 EXISTING LEVELING BINDER (MM), TYP 1, 1"
28 EXISTING HMA OVERLAY, +/- 4.75"

FILE NAME = S:\CONTRMAINT_CAD\72L20 - D6 PATCHING SANG CO 2019\PLANS\72L20-sht-17-26-typicals-1.dgn	USER NAME = nicholsonsl	DESIGNED -	REVISED -	STATE OF ILLINOIS DEPARTMENT OF TRANSPORTATION	TYPICAL CROSS SECTIONS IL 29				F.A.P. RTE.	SECTION	COUNTY	TOTAL SHEETS	SHEET NO.
		DRAWN -	REVISED -						VAR	D6 PATCHING SANG CO 2019	SANGAMON	30	25
	PLOT SCALE = 4200.0000 ' / in.	CHECKED -	REVISED -								CONTRACT NO. 72L20		
Default	PLOT DATE = 3/28/2019	DATE -	REVISED -		SCALE:	SHEET 9 OF 10 SHEETS	STA.	TO STA.			ILLINOIS FED. AID PROJECT		

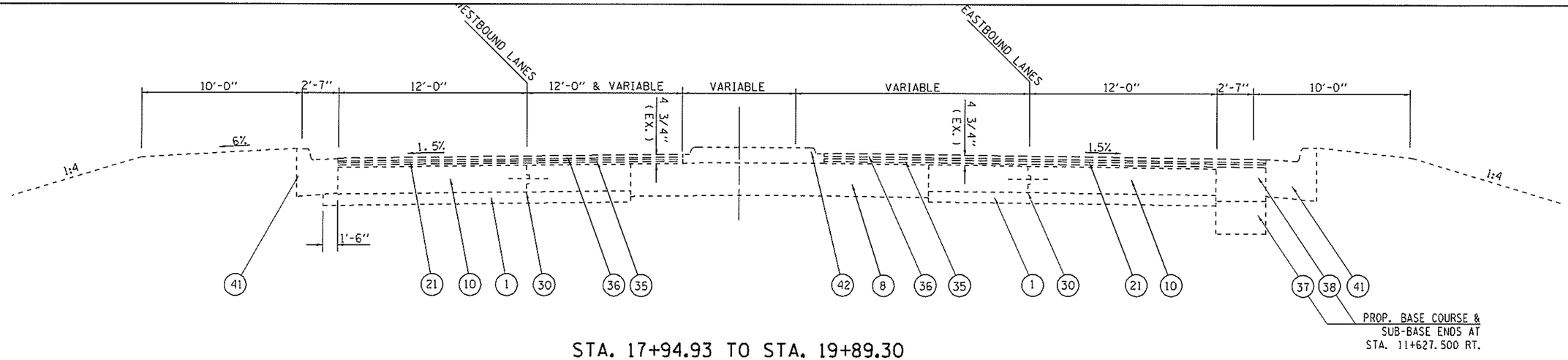

STA. 17+94.93 TO STA. 19+89.30

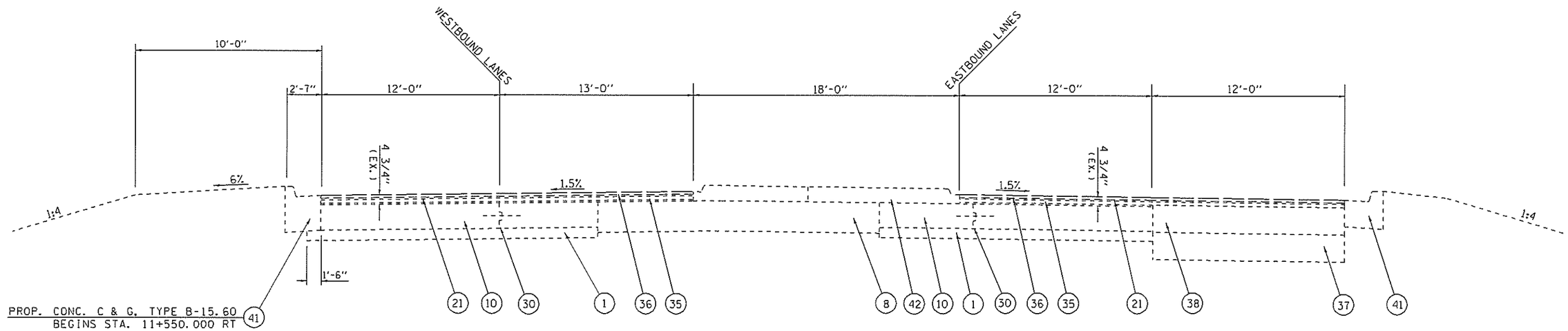

• -- EXISTING RAISED MEDIAN
BEGINS @ 11+588.000

STA. 19+89.30 to STA. 27+27.77

LEGEND

1 EXISTING STABILIZED SUB-BASE, 4"
8 EXISTING P.C.C. BASE COURSE, 9"
10 EXISTING 2 1/2" LUGLESS BRICK (VARIOUS LOCATIONS)
21 EXISTING 3/4" Ø SMOOTH BAR
28 EXISTING HMA OVERLAY +/- 4.75"
30 EXISTING BITUMINOUS BASE COURSE, 10"
35 EXISTING LEVELING BINDER (MM) TYPE 1, 1"
36 EXISTING HMA SURFACE COURSE, MIX D, CLASS I, TYPE 1, 1.5"
37 EXISTING SUB-BASE GRANULAR MATERIAL, TY A, 12"
38 EXISTING HMA BASE COURSE, 11"
41 EXISTING CCC&G, TYPE B-6.24
42 EXISTING CONCRETE MEDIAN (SPECIAL)

FILE NAME = S:\CONTRMAINT_CAD\72L20 - DB PATCHING SANG CO 2019\PLANS\72L20-sht-17-28-typicals-1.dgn	USER NAME = nicholsonsl	DESIGNED -	REVISED -	STATE OF ILLINOIS DEPARTMENT OF TRANSPORTATION	TYPICAL CROSS SECTIONS IL 29	F.A.P. RTE.	SECTION	COUNTY	TOTAL SHEETS	SHEET NO.
		DRAWN -	REVISED -			VAR	DB PATCHING SANG CO 2019	SANGAMON	30	26
	PLOT SCALE = 4200.0000 ' / in.	CHECKED -	REVISED -					CONTRACT NO. 72L20		
Default	PLOT DATE = 3/28/2019	DATE -	REVISED -		SCALE: SHEET 10 OF 10 SHEETS STA. TO STA.			ILLINOIS FED. AID PROJECT		

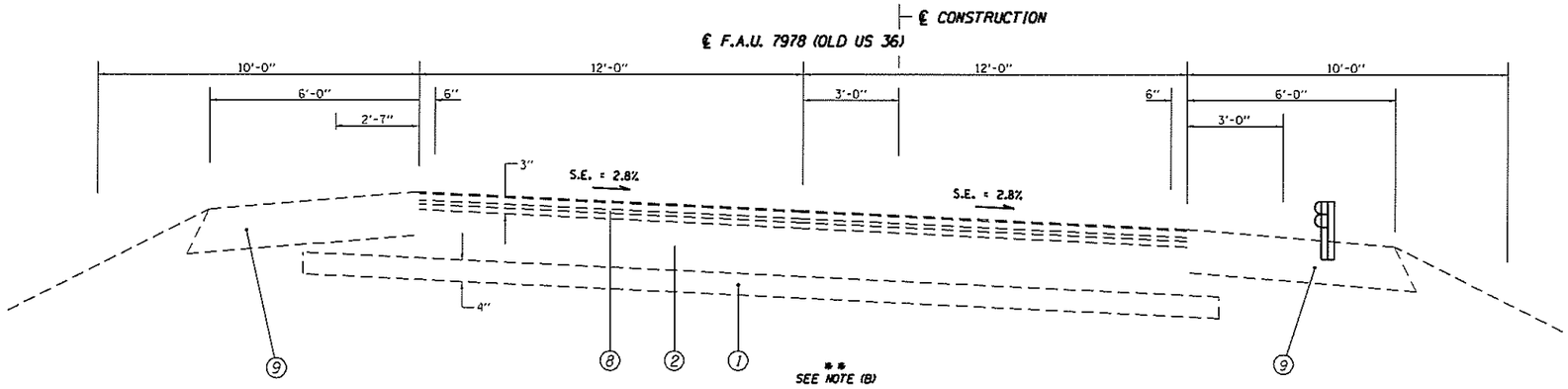

℄ OLD US 36			℄ CONSTRUCTION	
[188.74']	(42)	STA 89+70.00 TO 91+58.74	STA 189+65.70 TO 191+54.37	[188.67']
[115.13']	(43)	STA 93+49.87 TO 94+65.00	STA 193+45.27 TO 194+60.40	[115.13']

S.N.: 084-0053
STA 191+54.37 TO
STA 193+45.27

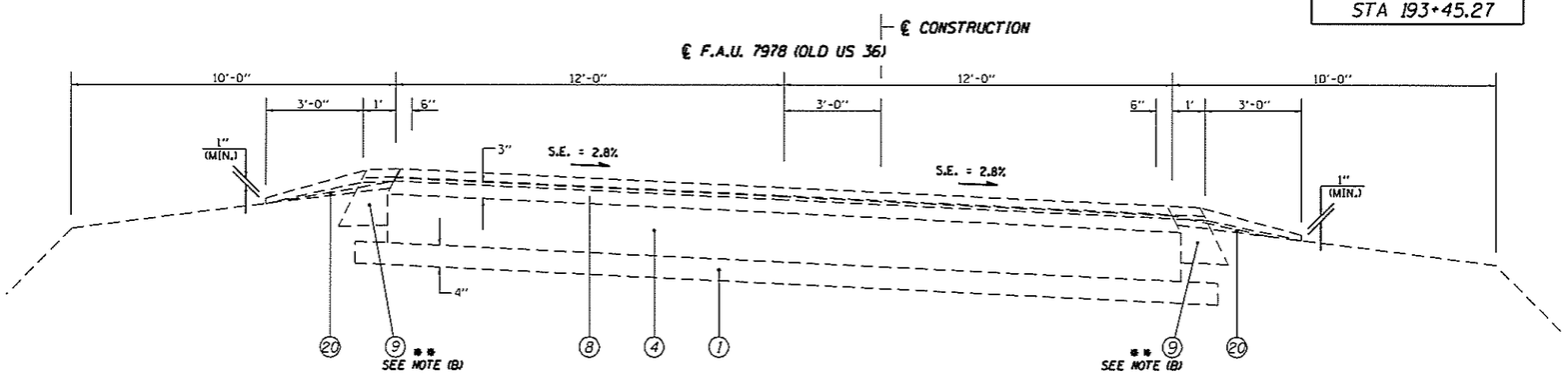

℄ OLD US 36			℄ CONSTRUCTION	
[747.4']	(44)	STA 94+65.00 TO 102+12.40	STA 194+60.40 TO 202+06.07	[745.67']

LEGEND

1. EXIST. SUB-BASE GRANULAR MATERIAL
2. EXIST. P.C.C. PAVEMENT 9"
3. EXIST. P.C.C. PAVEMENT 9"-6"-9"
4. EXIST. P.C.C. PAVEMENT 10"
5. EXIST. BITUMINOUS BASE COURSE 10"
6. EXIST. P.C.C. BASE COURSE WIDENING 9"
7. EXIST. STABILIZED BASE COURSE 10"
8. EXIST. HMA OVERLAY, +/- 3"
9. EXIST. HMA SHOULDERS, 8"
10. EXIST. PIPE UNDERDRAIN 6"
11. EXIST. CONCRETE GUTTER, TYPE A (MODIFIED)
12. EXIST. CONCRETE GUTTER, TYPE B
13. EXIST. CONCRETE GUTTER, TYPE C (MODIFIED)
14. EXIST. P.C.C. CURB & GUTTER, TYPE 10 (MODIFIED)
15. EXIST. P.C.C. CURB & GUTTER, TYPE 6
16. EXIST P.C.C. CURB & GUTTER, TYPE 6 (MODIFIED)
17. EXIST P.C.C. CURB & GUTTER, TYPE 7
18. EXIST P.C.C. CURB, TYPE 4
19. EXIST. P.C.C. CURB, TYPE 10 (MODIFIED)
20. EXIST. AGGREGATE SHOULDERS, TYPE B

** NOTE:

(A) PROP. NOMINAL MILLING DEPTH IS ½" FR. STA 93+49.87 (193+45.27) TO 94+65.00 (194+60.40)

(B) PROP. BIT SHLDRS SUPER 8" BEGIN AT STA 95+15.10 LT (195+10.40 LT) & 95+64.00 RT (195+88.70 RT) AND END AT STA 98+99.70 LT & RT

FILE NAME = S:\CONTRMAINT_CAD\72L20 - D6 PATCHING SANG CO 2019\PLANS\72L20-sht-27-30-typicals-OLD36.dgn	USER NAME = nicholsonsl	DESIGNED - RTS	REVISED - RTS 04-09-09	STATE OF ILLINOIS DEPARTMENT OF TRANSPORTATION	TYPICAL CROSS SECTIONS OLD 36	F.A.P. RTE.	SECTION	COUNTY	TOTAL SHEETS	SHEET NO.
		DRAWN - RTS	REVISED -			VAR	D6 PATCHING SANG CO 2019	SANGAMON	30	27
	PLOT SCALE = 105.0000 ' / in.	CHECKED -	REVISED -					CONTRACT NO. 72L20		
	PLOT DATE = 3/28/2019	DATE - 09-25-08	REVISED -		SCALE: SHEET NO. 1 OF 4 SHEETS STA. TO STA.	FED. ROAD DIST. NO.	ILLINOIS	FED. AID PROJECT		

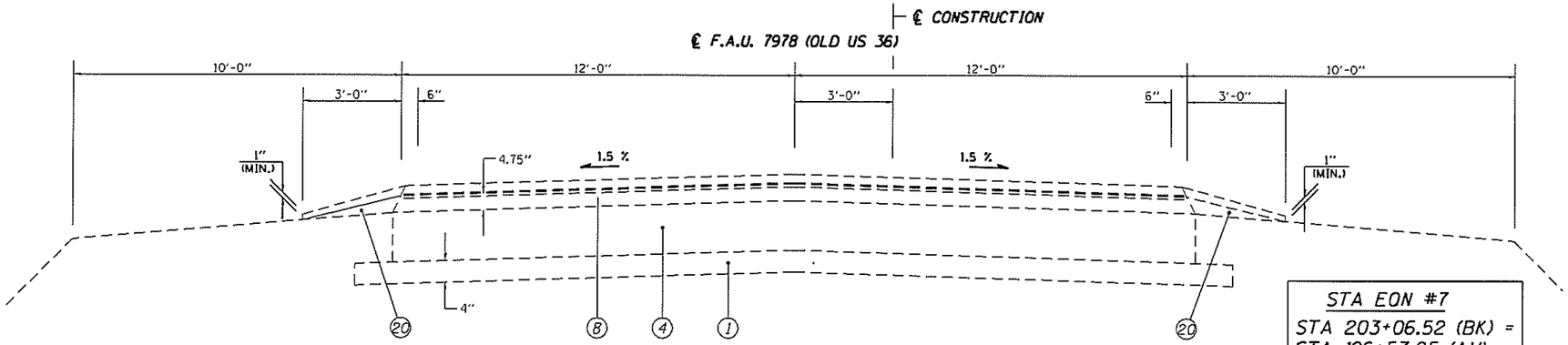

STA EON #7
STA 203+06.52 (BK) =
STA 106+57.25 (AH)

℄ OLD US 36

[100.16'] (45) STA 102+12.40 TO 103+12.56
[1,383.6'] (46) STA 106+58.20 TO 121+41.80

℄ CONSTRUCTION

STA 202+06.07 TO 203+06.52 [100.45']

FULL S.E.: (S.E.#8 = 2.8%)
STA 80+68.30 to 102+12.40
S.E. TRANSITION:
STA 78+88.70 TO 80+68.30
STA 102+12.40 TO 107+42.80

LEGEND

1. EXIST. SUB-BASE GRANULAR MATERIAL
2. EXIST. P.C.C. PAVEMENT 9"
3. EXIST. P.C.C. PAVEMENT 9"-6"-9"
4. EXIST. P.C.C. PAVEMENT 10"
5. EXIST. BITUMINOUS BASE COURSE 10"
6. EXIST. P.C.C. BASE COURSE WIDENING 9"
7. EXIST. STABILIZED BASE COURSE 10"
8. EXIST. HMA OVERLAY, +/- 3"
9. EXIST. HMA SHOULDERS, 8"
10. EXIST. PIPE UNDERDRAIN 6"
11. EXIST. CONCRETE GUTTER, TYPE A (MODIFIED)
12. EXIST. CONCRETE GUTTER, TYPE B
13. EXIST. CONCRETE GUTTER, TYPE C (MODIFIED)
14. EXIST. P.C.C. CURB & GUTTER, TYPE 10 (MODIFIED)
15. EXIST. P.C.C. CURB & GUTTER, TYPE 6
16. EXIST P.C.C. CURB & GUTTER, TYPE 6 (MODIFIED)
17. EXIST P.C.C. CURB & GUTTER, TYPE 7
18. EXIST P.C.C. CURB, TYPE 4
19. EXIST. P.C.C. CURB, TYPE 10 (MODIFIED)
20. EXIST. AGGREGATE SHOULDERS, TYPE B

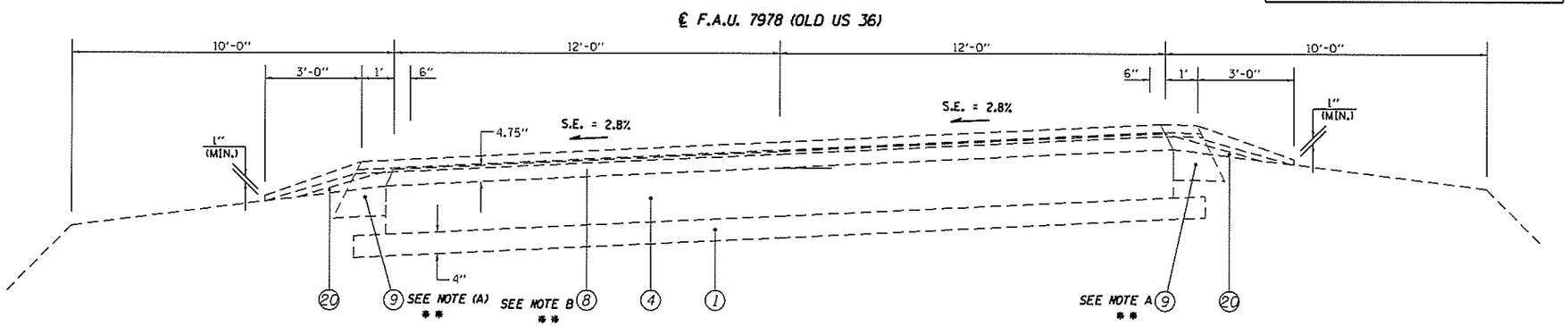

** NOTE:

(A) PROP. 1' BIT SHOULDERS SUPER 8" BEGIN AT STA 121+14.59 LT & RT AND END AT AT STA 147+37.10 LT AND STA 147+54.60 LT

(B) MILLING DEPTH TAPERS FR. ½" TO 2" FR. STA 146+70.00 TO 147+00.00

(47) STA 120+41.80 TO 147+54.60 [2,712.8']

FULL S.E.: (S.E.#9 = 2.8%)
STA 122+21.60 TO 150+40.90
S.E. TRANSITION:
STA 120+41.80 TO 122+21.60
STA 150+40.90 TO 152+20.7

FILE NAME = S:\CONTRMAINT_CAD\72L20 - D6 PATCHING SANG CO 2019\PLANS\72L20-sht-27-30-typicals-OLD36.dgn	USER NAME = nicholsonsl	DESIGNED - RTS	REVISED - RTS 04-09-09	STATE OF ILLINOIS DEPARTMENT OF TRANSPORTATION	TYPICAL CROSS SECTIONS OLD 36	F.A.P. RTE.	SECTION	COUNTY	TOTAL SHEETS	SHEET NO.
						VAR	D6 PATCHING SANG CO 2019	SANGAMON	30	28
	PLOT SCALE = 105.0000 ' / in.	CHECKED -	REVISED -					CONTRACT NO. 72L20		
	PLOT DATE = 3/28/2019	DATE - 09-25-08	REVISED -		SCALE: SHEET NO. 2 OF 4 SHEETS STA. TO STA.	FED. ROAD DIST. NO.	ILLINOIS	FED. AID PROJECT		

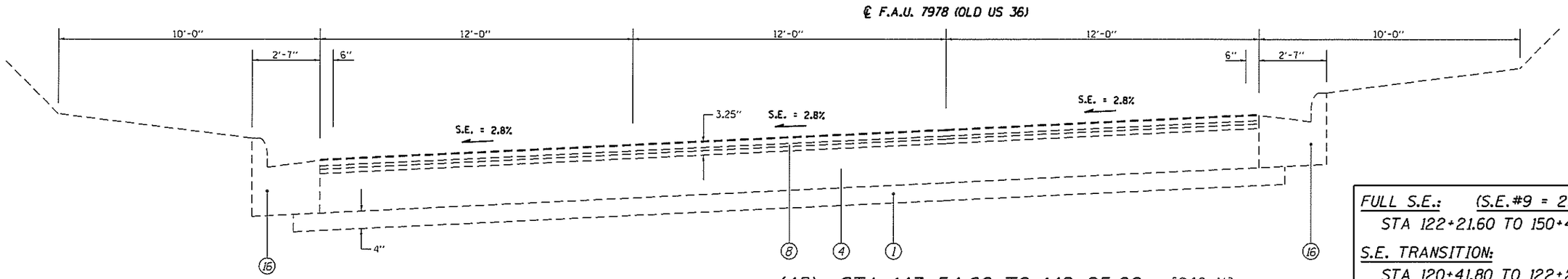

(48) STA 147+54.60 TO 149+95.00 [240.4']

FULL S.E.: (S.E.#9 = 2.8%)
STA 122+21.60 TO 150+40.90

S.E. TRANSITION:
STA 120+41.80 TO 122+21.60
STA 150+40.90 TO 152+20.70

LEGEND

1. EXIST. SUB-BASE GRANULAR MATERIAL
2. EXIST. P.C.C. PAVEMENT 9"
3. EXIST. P.C.C. PAVEMENT 9"-6"-9"
4. EXIST. P.C.C. PAVEMENT 10"
5. EXIST. BITUMINOUS BASE COURSE 10"
6. EXIST. P.C.C. BASE COURSE WIDENING 9"
7. EXIST. STABILIZED BASE COURSE 10"
8. EXIST. HMA OVERLAY, 3.25"
9.
10. EXIST. PIPE UNDERDRAIN 6"
11. EXIST. CONCRETE GUTTER, TYPE A (MODIFIED)
12. EXIST. CONCRETE GUTTER, TYPE B
13. EXIST. CONCRETE GUTTER, TYPE C (MODIFIED)
14. EXIST. P.C.C. CURB & GUTTER, TYPE 10 (MODIFIED)
15. EXIST. P.C.C. CURB & GUTTER, TYPE 6
16. EXIST P.C.C. CURB & GUTTER, TYPE 6 (MODIFIED)
17. EXIST P.C.C. CURB & GUTTER, TYPE 7
18. EXIST P.C.C. CURB, TYPE 4
19. EXIST. P.C.C. CURB, TYPE 10 (MODIFIED)
20. EXIST. AGGREGATE SHOULDERS, TYPE B

FILE NAME = S:\CONTRMAINT_CAD\72L20 - D6 PATCHING SANG CO 2019\PLANS\72L20-sht-27-30-typicals-OLD36.dgn	USER NAME = nicholsonsl	DESIGNED - RTS	REVISED - RTS 04-09-09	STATE OF ILLINOIS DEPARTMENT OF TRANSPORTATION	TYPICAL CROSS SECTIONS OLD 36	F.A.P. RTE. VAR	SECTION D6 PATCHING SANG CO 2019	COUNTY SANGAMON	TOTAL SHEETS 30	SHEET NO. 29
	PLOT SCALE = 105.0000 ' / in.	CHECKED -	REVISED -					CONTRACT NO. 72L20		
	PLOT DATE = 3/28/2019	DATE - 09-25-08	REVISED -		SCALE: SHEET NO. 3 OF 4 SHEETS STA. TO STA.	FED. ROAD DIST. NO.	ILLINOIS	FED. AID PROJECT		

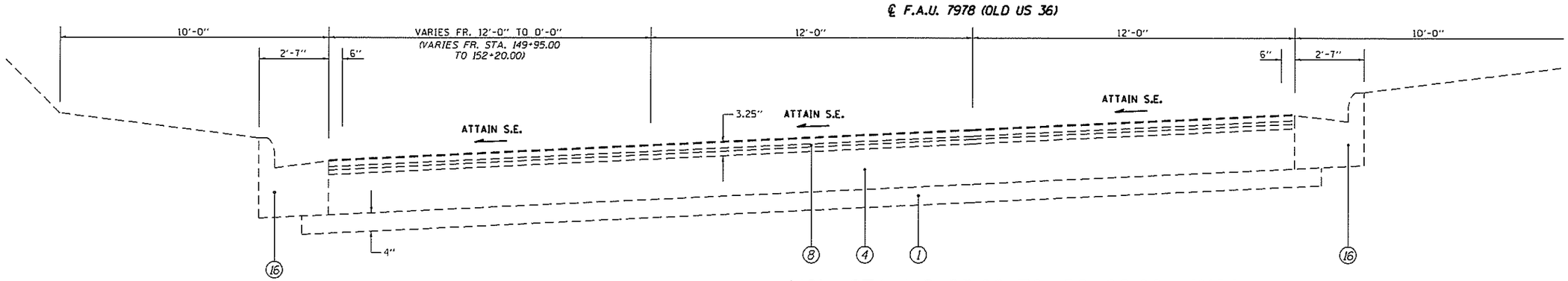

(49) STA 149+95.00 TO 152+20.00 [225']

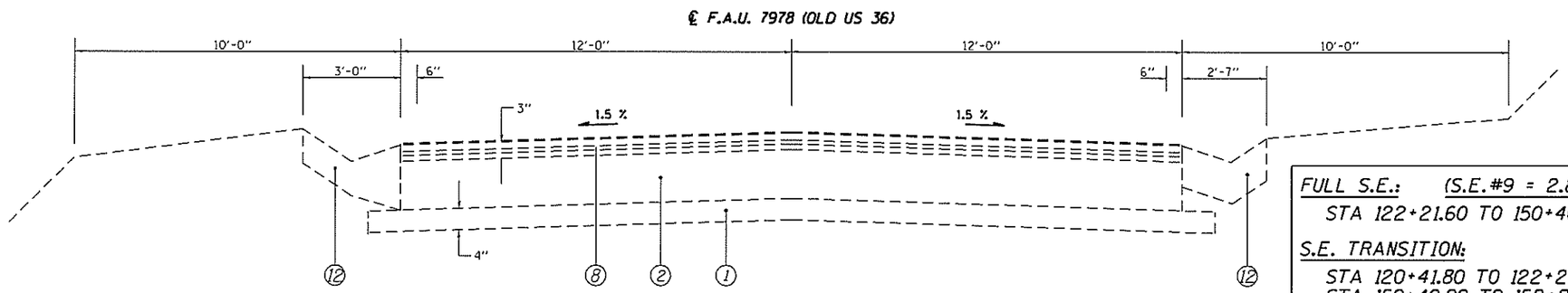

(50) STA 152+20.00 TO 153+26.00 [165']

FULL S.E.: (S.E.#9 = 2.8%)
STA 122+21.60 TO 150+40.90

S.E. TRANSITION:
STA 120+41.80 TO 122+21.60
STA 150+40.90 TO 152+20.7

LEGEND

1. EXIST. SUB-BASE GRANULAR MATERIAL
2. EXIST. P.C.C. PAVEMENT 9"
3. EXIST. P.C.C. PAVEMENT 9"-6"-9"
4. EXIST. P.C.C. PAVEMENT 10"
5. EXIST. BITUMINOUS BASE COURSE 10"
6. EXIST. P.C.C. BASE COURSE WIDENING 9"
7. EXIST. STABILIZED BASE COURSE 10"
8. EXIST. HMA OVERLAY 3.25"
9. EXIST. BITUMINOUS SHOULDERS
10. EXIST. PIPE UNDERDRAIN 6"
11. EXIST. CONCRETE GUTTER, TYPE A (MODIFIED)
12. EXIST. CONCRETE GUTTER, TYPE B
13. EXIST. CONCRETE GUTTER, TYPE C (MODIFIED)
14. EXIST. P.C.C. CURB & GUTTER, TYPE 10 (MODIFIED)
15. EXIST. P.C.C. CURB & GUTTER, TYPE 6
16. EXIST P.C.C. CURB & GUTTER, TYPE 6 (MODIFIED)
17. EXIST P.C.C. CURB & GUTTER, TYPE 7
18. EXIST P.C.C. CURB, TYPE 4
19. EXIST. P.C.C. CURB, TYPE 10 (MODIFIED)
20. EXIST. AGGREGATE SHOULDERS, TYPE B