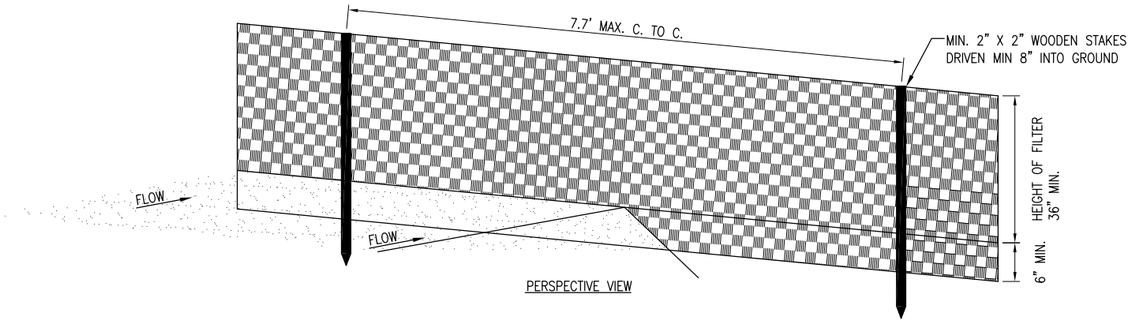

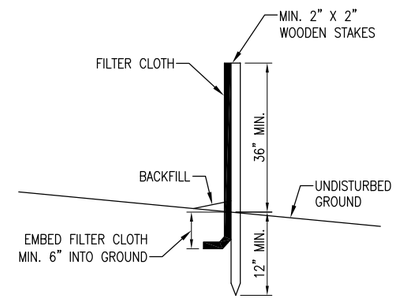

SILT FENCE DETAIL

NO SCALE

STORM WATER POLLUTION PREVENTION NOTES

1. THE CONTRACTOR SHALL IMPLEMENT ALL PROVISIONS OF THE CONTRACT DOCUMENTS TO ASSURE THAT STORM WATER POLLUTION PREVENTION ITEMS ARE CONSTRUCTED AND MAINTAINED IN A TIMELY MANNER. SEDIMENTATION MUST NOT BE TRANSPORTED OFF THE CONSTRUCTION SITE. PERMANENT DRAINAGE FEATURES AND VEGETATIVE MEASURES SHALL BE PROVIDED AS SOON AS POSSIBLE.

2. THE CONTRACTOR SHALL BE REQUIRED TO IMPLEMENT AND MAINTAIN STORM WATER POLLUTION PREVENTION PRACTICES AND MEASURES PRIOR TO THE STRIPPING OF EXISTING VEGETATION WHERE EVER POSSIBLE AND AS SOON AS CONSTRUCTION PERMITS IN OTHER AREAS. POLLUTION CONTROL MEASURES SHALL BE IN ACCORDANCE WITH THE CONTRACT DOCUMENTS, INCLUDING THESE CONSTRUCTION PLANS, AND WITH STANDARDS AND SPECIFICATIONS FOR SOIL EROSION AND SEDIMENT CONTROL, ILLINOIS ENVIRONMENTAL PROTECTION AGENCY, CURRENT ISSUE. THE CONTRACTOR SHALL ADJUST HIS OPERATIONS AND IMPLEMENT POLLUTION CONTROL MEASURES SO THAT NO RUNOFF FROM STRIPPED AREAS WILL LEAVE THE CONSTRUCTION SITE OTHER THAN THROUGH SEDIMENT TRAPS OR OTHER SUITABLE CONTROL MEASURES.

3. POLLUTION CONTROL ITEMS SHALL BE PROVIDED AS NOTED ON THE STORM WATER POLLUTION PREVENTION PLAN AND IN THE STORM WATER POLLUTION PREVENTION DETAILS AND AS DIRECTED BY THE ENGINEER. THE LIMITS OF SUCH MEASURES SHALL BE STAKED BY THE CONTRACTOR PRIOR TO THE COMMENCEMENT OF CONSTRUCTION. SUCH LIMITS MAY BE ADJUSTED BY THE ENGINEER TO ACCOUNT FOR ACTUAL SITE CONDITIONS EXPERIENCED DURING CONSTRUCTION. ADDITIONAL COMPENSATION FOR MEASURES EXCEEDING THE PLAN QUANTITIES WILL BE PAID FOR AT THE CONTRACT UNIT PRICE FOR EACH ITEM.

4. THE CONTRACTOR IS TO MAINTAIN AND ADJUST, REPAIR OR REPLACE ALL POLLUTION PREVENTION MEASURES AS REQUIRED OR AS DIRECTED BY THE ENGINEER UNTIL PERMANENT VEGETATION HAS BEEN ESTABLISHED. MAINTENANCE OF POLLUTION CONTROL MEASURES IS TO BE PROVIDED AT NO ADDITIONAL COST TO THE CONTRACT.

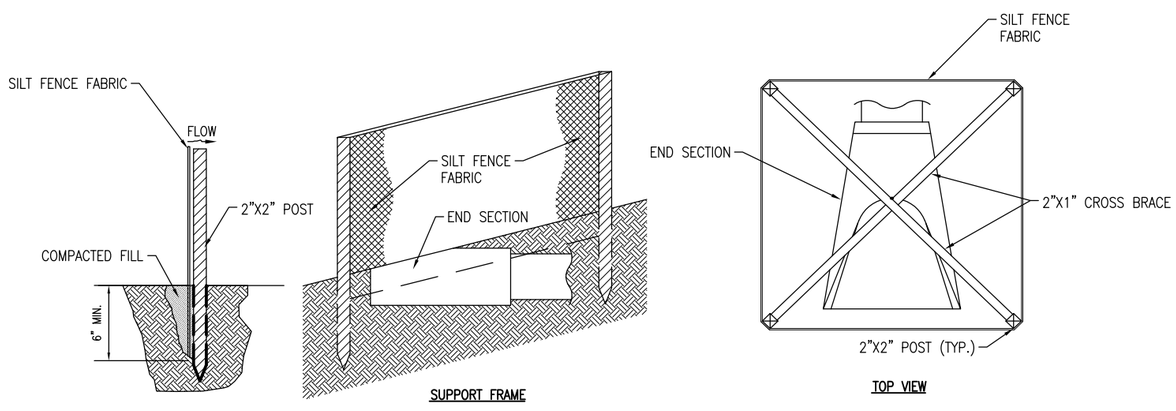

FABRIC END SECTION PROTECTION

NOT TO SCALE

REVISION	DATE

SAINT LOUIS DOWNTOWN AIRPORT
A Division of Bi-State Development Agency

IL PROJ.: CPS-4213 BLOCK GRANT PROJ.: 3-17-0039-B30

Hanson Project No. 12A0069
Filename C-581-SWPDET.dwg
Scale NOT TO SCALE
Date 03/08/13

LAYOUT	JRH	02/01/13
DRAWN	JRH	02/01/13
REVIEWED	BSS	03/08/13

HANSON

© Copyright Hanson Professional Services Inc. 2013
Hanson Professional Services Inc.
1525 South Sixth Street
Springfield, Illinois 62703-2886

RECONSTRUCT TAXILANE IN NORTHWEST QUADRANT

STORMWATER POLLUTION PREVENTION DETAILS

MAR 11, 2013 12:00 PM HARRI01115
pw:\\spi-svr306.hanson.com:Hanson Projects\Documents\12Jobs\12A0069\12A0069\CAD\Airport\Sheet\C-581-SWPDET