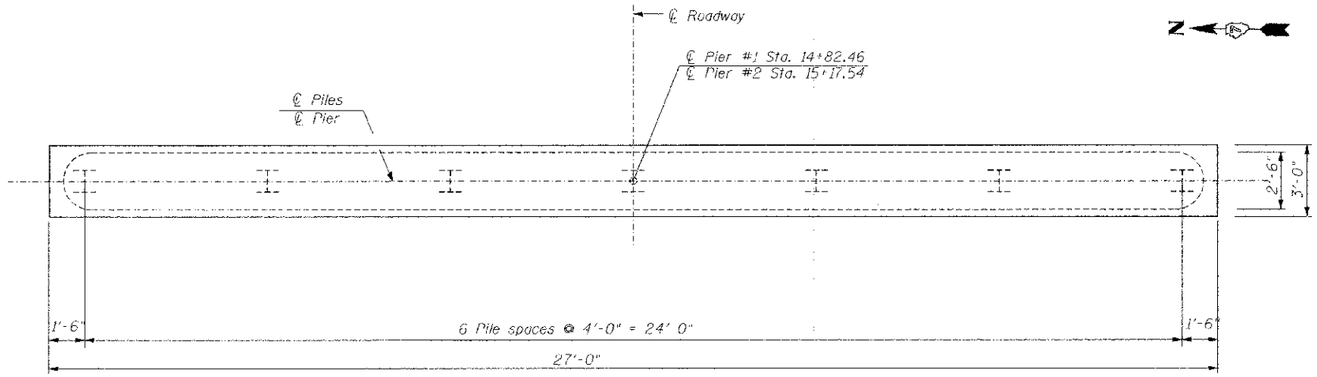

PLAN

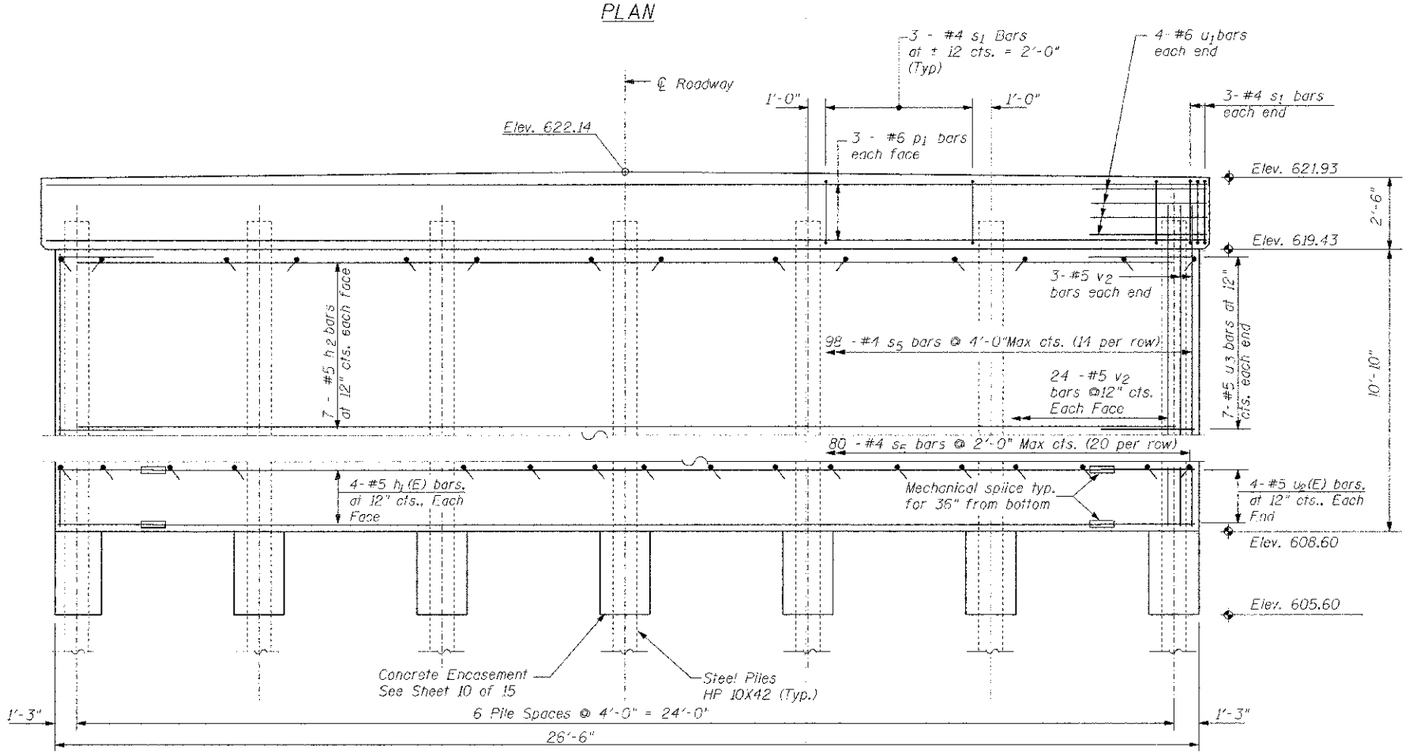

ELEVATION
(Looking East)

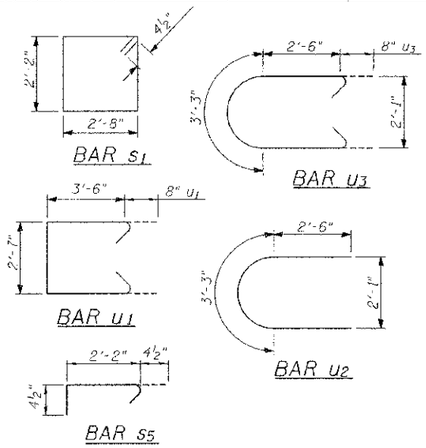

BILL OF MATERIAL

BOTH PIERS				
Bar	No.	Size	Length	Shape
h_1	16	#5	19'-2"	
h_2	28	#5	23'-8"	
p_1	12	#6	24'-0"	
s_1	48	#4	10'-5"	
s_5	356	#4	2'-11"	
u_1	16	#6	10' 11"	
u_2	16	#5	8'-3"	
u_3	28	#5	9'-7"	
v_2	108	#5	12'-0"	
Structure Excavation			Cu.Yd.	14
Cofferdam Excavation			Cu.Yd.	59
Concrete Structures			Cu.Yd.	67.7
Concrete Encasement			Cu.Yd.	4.9
Reinforcement Bars			Lbs.	4507
Mechanical Splicers			Each	32
Furnishing Steel Piles HP 10X42			Ft.	288
Driving Piles			Ft.	288
Test Pile Steel HP 10X42			Each	2
Cofferdam (Type 2) (Location-1)			Each	1
Cofferdam (Type 2) (Location-2)			Each	1

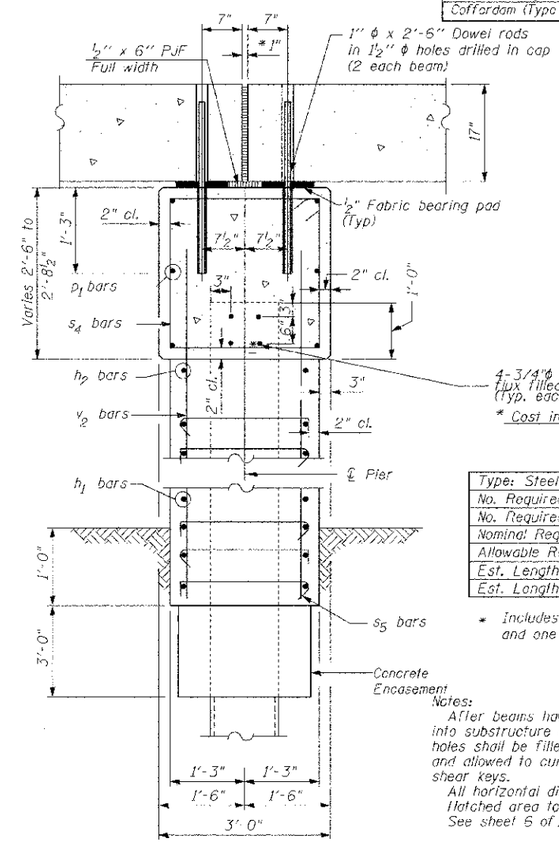

4-3/4"ϕ X 4" Granular or solid flux filled headed studs automatically end welded (Typ. each Flange, each Pile)

* Cost included with furnishing piles.

PILE DATA

Type: Steel Piles HP 10X42	
No. Required (Pier 1): 7 *	
No. Required (Pier 2): 7 *	
Nominal Required Bearing: 300 kips	
Allowable Resistance Available: 100 kips	
Est. Length (Pier 1):	24 Ft.
Est. Length (Pier 2):	24 Ft.

* Includes one Test Pile at Pier 1 and one Test Pile at Pier 2.

Notes:

After beams have been erected, holes shall be drilled into substructure and anchor dowels placed. Dowel holes shall be filled with non-shrink grout to top of beam and allowed to cure min. 24 hrs. prior to grouting the shear keys.

All horizontal dimensions are at right angles to beam ends.

Hatched area to be poured after beams are in place.

See sheet 6 of 15 for bearing pad details.

SECTION THRU PIER

*1" Jt. shall be filled with non-shrink grout. 1" dimension may vary to accommodate tolerance in beam lengths.

PIER DETAILS
STRUCTURE NO. 087-3565

RTE.	SECTION	COUNTY	TOTAL SHEETS	SHEET NO.
TR217	07-01125-00-BR	SHELBY	15	9
		CONTRACT NO. 95655		
		FED. ROAD DIST. NO. ILLINOIS FED. AID PROJECT		

THE UPCHURCH GROUP, INC.

TUG PROJ. NO.: 6107065 PLOT DATE: 4/1/2013 8:51:53 AM FILE NAME: ...\0873565-001-Pier details.dgn