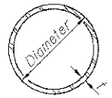

METAL SHELL PILE TABLE

Designation and outside diameter	Wall thickness t	Weight per foot (Lbs./ft.)	Inside volume (yd.³/ft.)
PP12	0.179"	22.60	0.0274
PP12	0.250"	31.37	0.0267
PP14	0.250"	36.71	0.0368
PP14	0.312"	45.61	0.0361

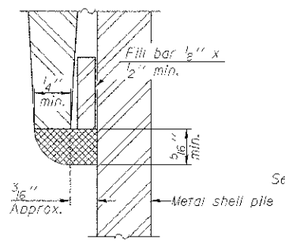

DETAIL A

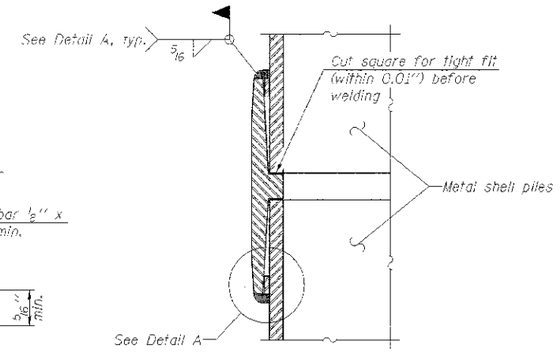

Notes:
The 1/8" x 1/2" min. fill bar may be constructed of 2 bars with a 1/8" max. gap between them.
Pile segments shall be driven to solid contact with splicer before welding.

WELDED COMMERCIAL SPLICE

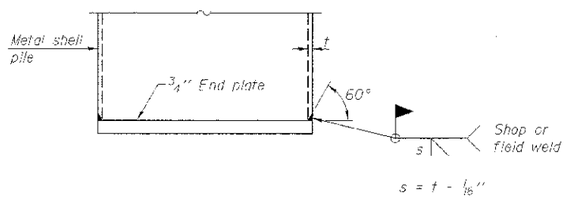

END PLATE ATTACHMENT

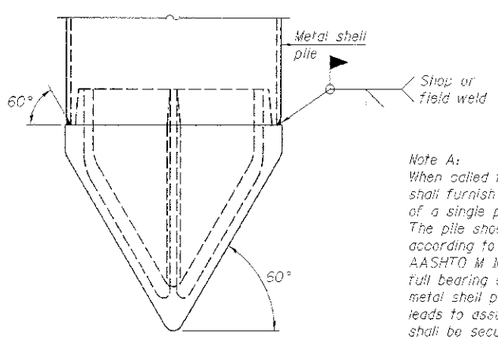

Note A:
When called for on the plans, the Contractor shall furnish metal shell pile shoes consisting of a single piece conical pile point as shown. The pile shoes shall be cast in one piece steel according to either ASTM A 148 Grade 90-60 or AASHTO M 103 Grade 65-35 and shall provide full bearing over the full circumference of the metal shell pile. The pile shoe shall have tapered leads to assure proper alignment and fitting and shall be secured to the pile with a circumferential weld.

METAL SHELL PILE SHOE ATTACHMENT

(See Note A)

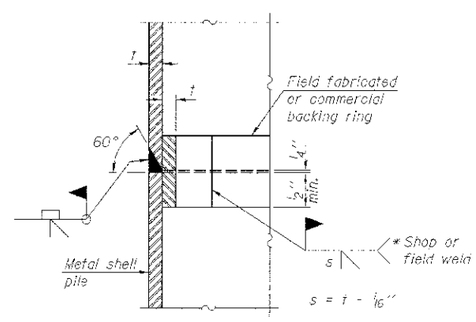

COMPLETE PENETRATION WELD SPLICE

* Field fabricated backing ring may be made from pile shell by removing segment to allow reducing circumference and vertically rejoin with partial joint penetration weld.

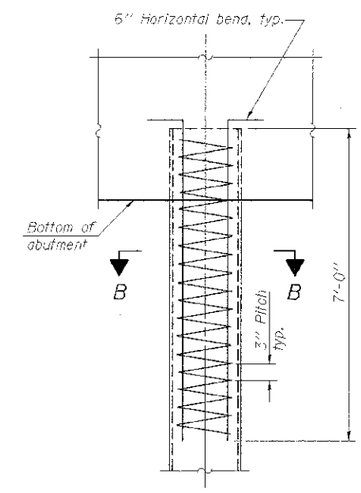

ELEVATION

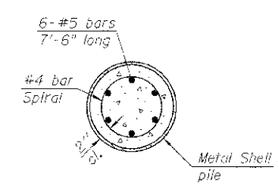

SECTION B-B

METAL SHELL PILE REINFORCEMENT AT ABUTMENTS

Note:
The metal shell piles shall be according to ASTM A 252 Grade 3.

FILE = S:\PROJECTS\2012\180312_Bureau_TR46\DESIGN\STRUCT\Drawings\180312_Metal_Shell_Pile.dgn

WILLETT HOFMANN & ASSOCIATES INC ENGINEERING ARCHITECTURE LAND SURVEYING 809 EAST 2ND STREET, DIXON, IL 61021-0367 T: 815-284-3381 DESIGN FIRM: #184-000918	DESIGNED - IPN CHECKED - BKC DRAWN - FDL CHECKED - BKC	REVISED - REVISED - REVISED - REVISED -	BUREAU COUNTY T.R. 46 (350 E. ST.) OVER W. FORK SPOON RIVER STATION 20+00	METAL SHELL PILE DETAILS STRUCTURE NO. 006-4263 STRUCTURAL SHEET NO. 8 OF 9	TWP. RTE. 46	SECTION 11-18:03-00-BR WHA# 1003012	COUNTY BUREAU	TOTAL SHEETS 19 / SHEET NO. 14 CONTRACT NO. 87531 ILLINOIS FED. AID PROJECT BROS-0011(050)