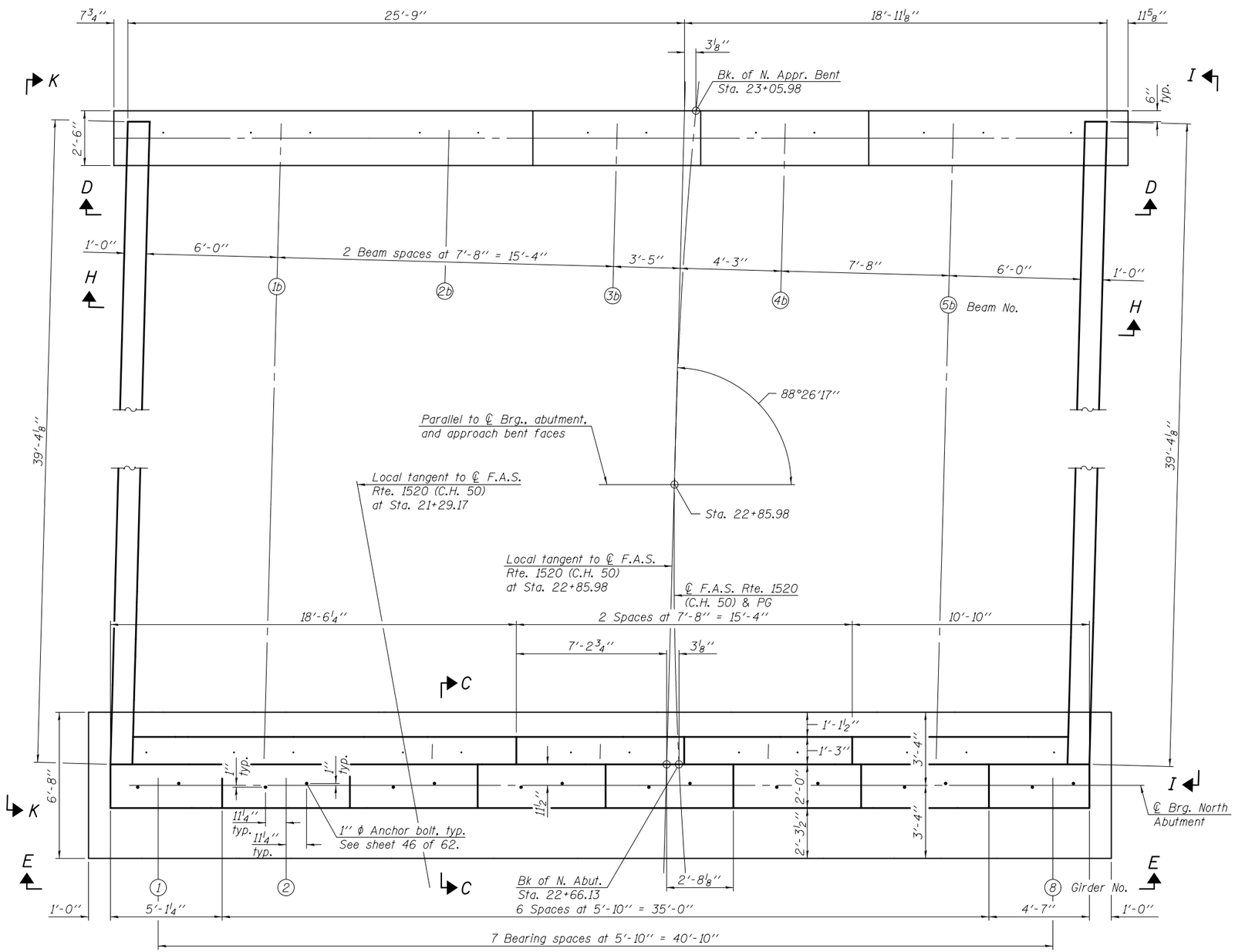

PLAN

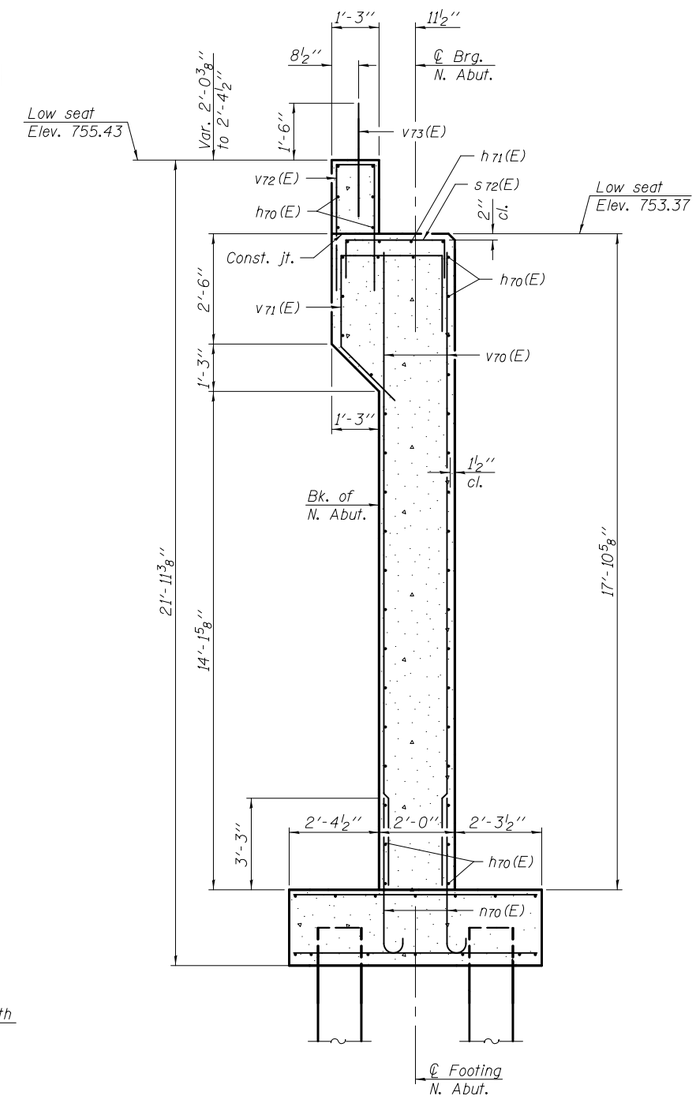

SECTION C-C

Note:
See sheet 25 of 62 for offsets to local tangent at Sta. 21+29.17.

DESIGNED - NICHOLAS R. BARNETT	EXAMINED	ACTING ENGINEER OF BRIDGE DESIGN	DATE - FEBRUARY 25, 2013	STATE OF ILLINOIS DEPARTMENT OF TRANSPORTATION	NORTH ABUTMENT STRUCTURE NO. 010 – 0289	F.A.I. RTE.	SECTION	COUNTY	TOTAL SHEETS / SHEET NO.
CHECKED - DEWEY H. COULTAS						74	10-4BR	CHAMPAIGN	290 / 138
DRAWN - MICHAEL B. MOSSMAN	PASSED	ACTING ENGINEER OF BRIDGES AND STRUCTURES	REVISED					CONTRACT NO. 70700	
CHECKED - D.H.C. / N.R.B.			REVISED		SHEET NO. 53 OF 62 SHEETS			ILLINOIS FED. AID PROJECT	