*USE STANDARD DETECTABLE WARNING W/ DIMENSIONS OF 5' X '2, UNLESS OTHERWISE NOTED.

N

SIDEWALK REMOVAL = 65.2 SQ. FT.

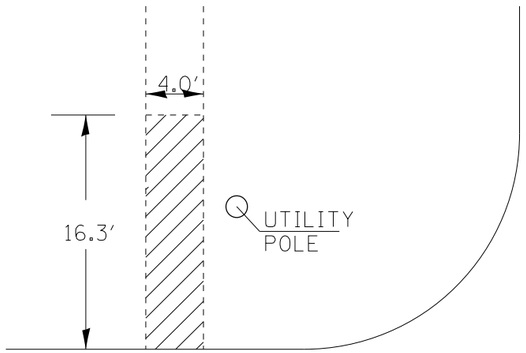

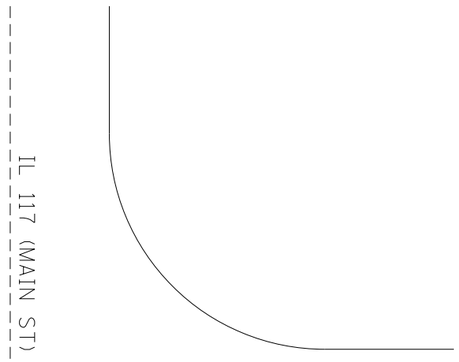

IL 117 (MAIN ST)

SECOND ST.

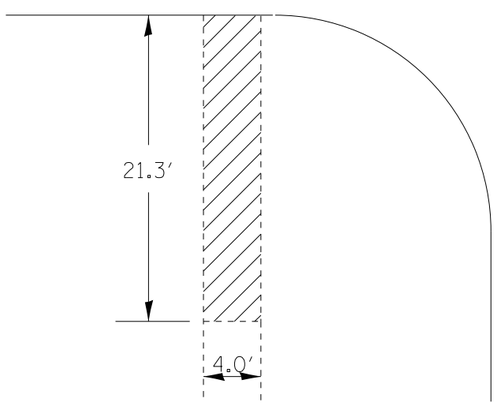

SIDEWALK REMOVAL = 85.2 SQ. FT.

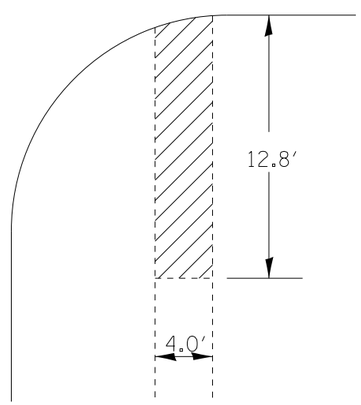

SIDEWALK REMOVAL = 51.2 SQ. FT.

EXISTING

PROP. PCC SIDEWALK = 81.5 SQ. FT.
(USE RURAL DETAIL A-A AND B-B)
DETECTABLE WARNINGS = 10 SQ. FT.

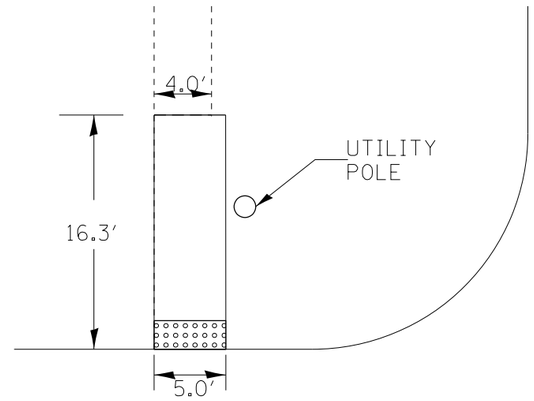

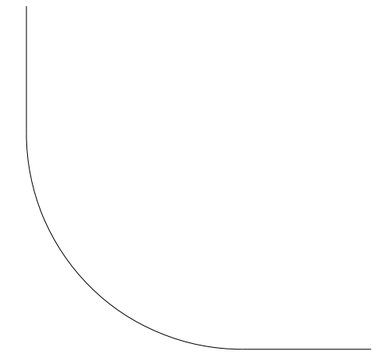

IL 117 (MAIN ST)

SECOND ST.

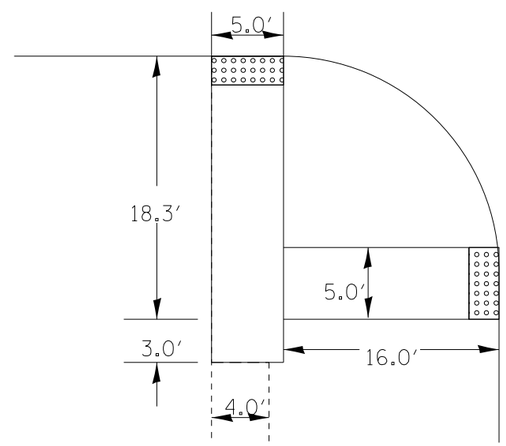

PROP. PCC SIDEWALK, = 186.4 SQ. FT.
(USE RURAL DETAIL A-A AND B-B)
DETECTABLE WARNINGS = 20 SQ. FT.

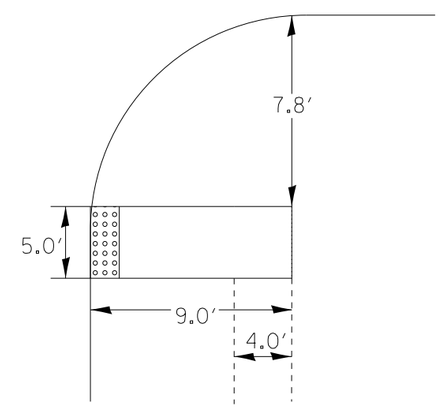

PROP. PCC SIDEWALK = 45.0 SQ. FT.
(USE RURAL DETAIL A-A AND B-B)
DETECTABLE WARNINGS = 10 SQ. FT.

PROPOSED

REMOVAL

DRAWING NOT TO SCALE

FILE NAME = 68982.dgn	USER NAME = aubreygs	DESIGNED -	REVISED -	STATE OF ILLINOIS DEPARTMENT OF TRANSPORTATION	SIDEWALK DETAILS (IL 117 AND SECOND ST)	F.A.S. RTE.	SECTION	COUNTY	TOTAL SHEETS / SHEET NO.
		DRAWN -	REVISED -			2361	101 RS-4; 102 RS-5	MARSHALL	51 / 38
	PLOT SCALE = 40.0000 ' / in.	CHECKED -	REVISED -					CONTRACT NO. 68982	
Default	PLOT DATE = 3/21/2013	DATE -	REVISED -		SCALE: SHEET 38 OF 51 SHEETS STA. 583+40		ILLINOIS FED. AID PROJECT		