PIER 2 BEAM REACTION TABLE

		SPAN 2	SPAN 3
R℄	(K)	35.6	35.6
R℄	(K)	29.1	29.1
Imp.	(K)	8.0	8.0
R (Total)	(K)	72.7	72.7

NOTES:

1. TEMPORARY BEAM SUPPORTS SHALL BE FURNISHED AND INSTALLED PRIOR TO BEGINNING CONCRETE REMOVAL OPERATIONS.
2. THE CONTRACTOR SHALL EXERCISE EXTREME CARE DURING CONCRETE REMOVAL OPERATIONS SO THE PPC-I BEAMS ARE NOT DAMAGED. IF THE EXISTING BEAMS ARE DAMAGED DUE TO THE CONTRACTOR'S CONCRETE REMOVAL OPERATIONS, THE CONTRACTOR SHALL REPAIR THE BEAMS TO THE SATISFACTION OF THE ENGINEER AT THE CONTRACTOR'S EXPENSE.
3. REMOVE EXISTING BEARINGS AND REPLACE WITH NEW FIXED BEARING AS DETAILED ON SHEET 23 OF 24.
4. ALL STRUCTURAL STEEL SHALL CONFORM TO AASHTO CLASSIFICATION M-270 GR. 36, UNLESS OTHERWISE NOTED.

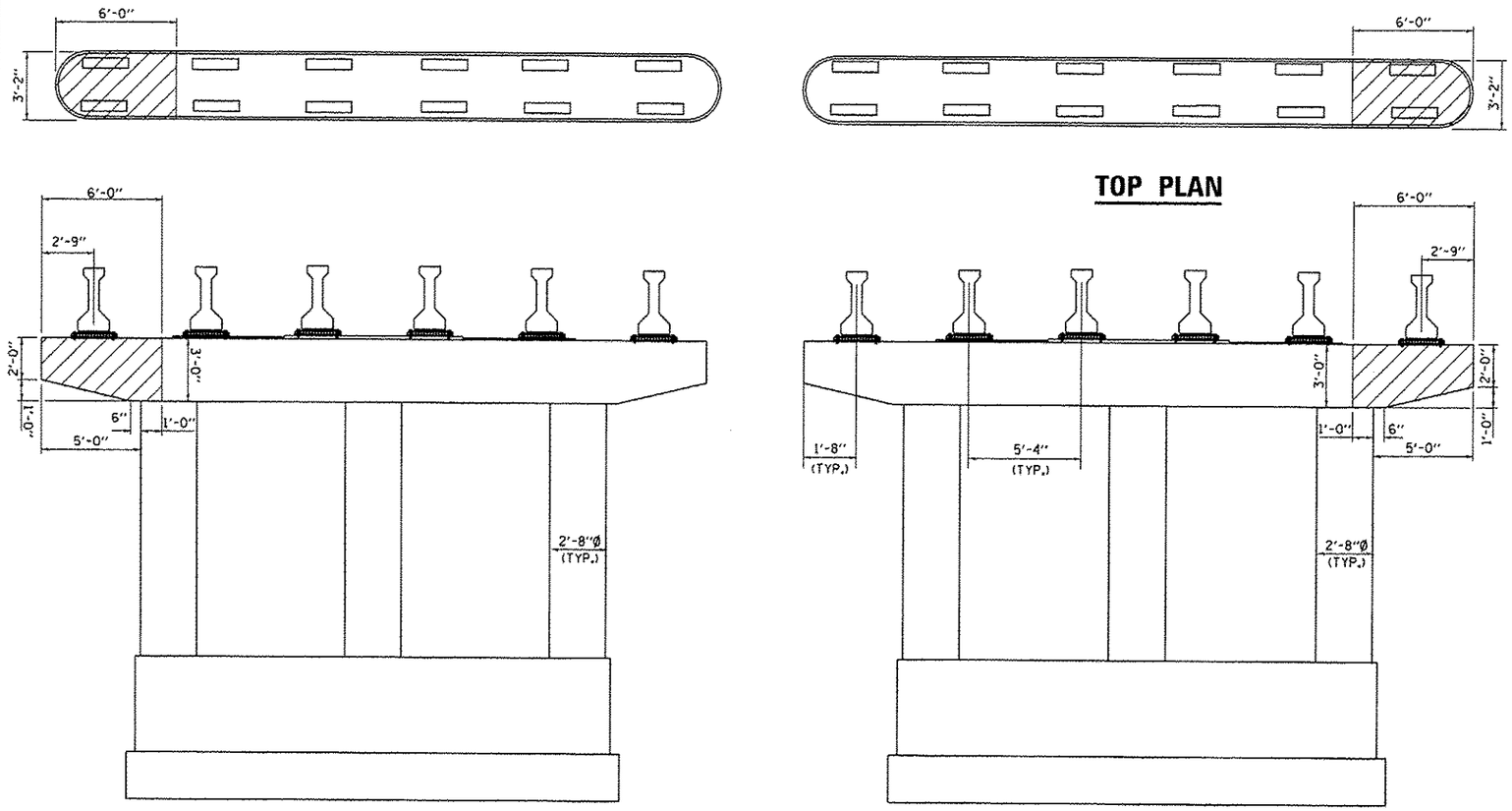

PIER2–CENTER PIER

LOOKING SOUTH

NORTH FACE

PIER2–CENTER PIER

LOOKING NORTH

SOUTH FACE

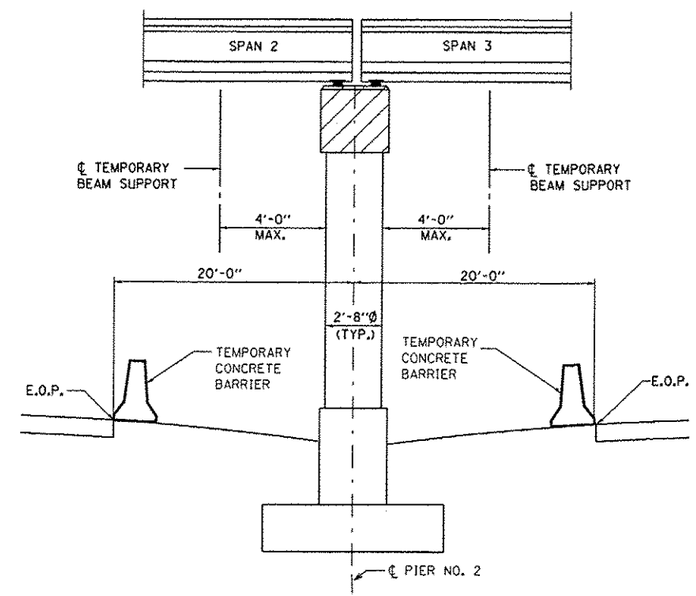

PIER2–CENTER PIER

LOOKING WEST

HATCHED AREA INDICATES CONCRETE REMOVAL

FILE NAME = o:\pw_work\pwidot\patelyj\d0320332\036671-sht-details.dgn	USER NAME = patelyj	DESIGNED - YOGESH PATEL	REVISED -
		DRAWN - YOGESH PATEL	REVISED -
	PLOT SCALE = 99.7558 ' / in.	CHECKED - RON WOODSHANK	REVISED -
	PLOT DATE = 4/3/2013	DATE -	REVISED -

STATE OF ILLINOIS
DEPARTMENT OF TRANSPORTATION

PIER 2 REPAIR DETAILS
SN: 050-0134

SCALE: | SHEET NO. 4 OF 5 SHEETS | STA. | TO STA.

F.A.I. RTE.	SECTION	COUNTY	TOTAL SHEETS	SHEET NO.
80	03 PIER CAP REPAIR 2014-1	LASALLE	25	23
		CONTRACT NO. 66C71		
		ILLINOIS		