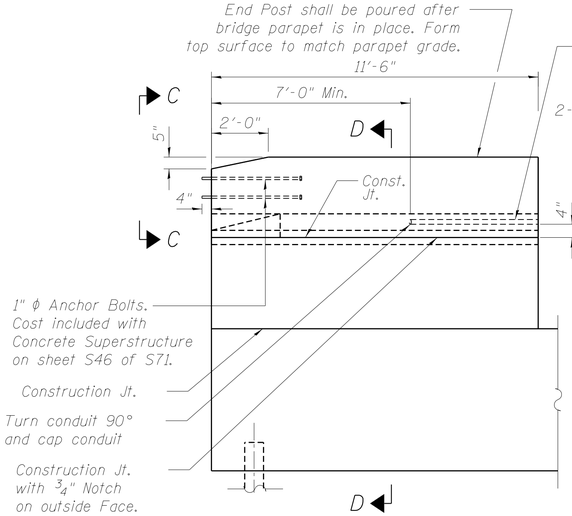

WING WALL ELEVATION
Showing Dimensions

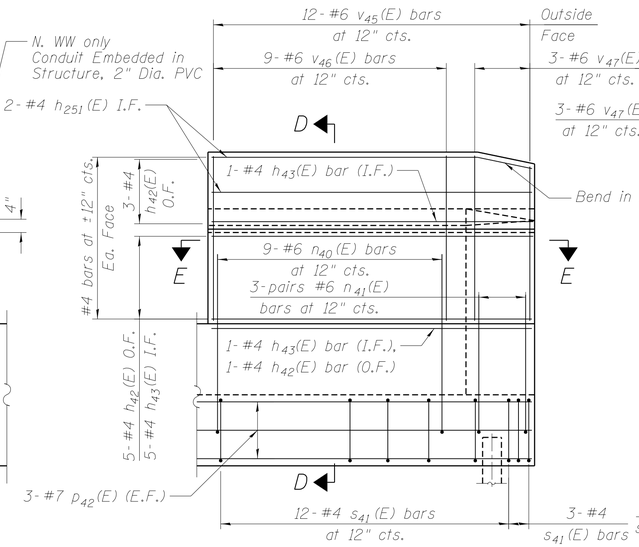

SOUTH WING WALL ELEVATION
Showing Reinforcement

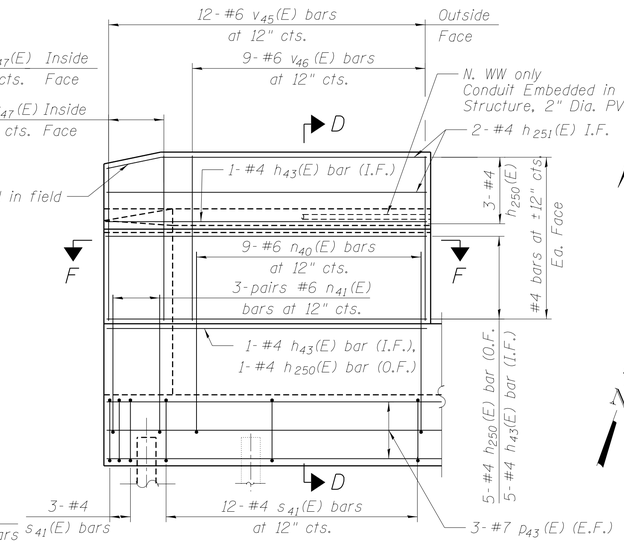

NORTH WING WALL ELEVATION
Showing Reinforcement

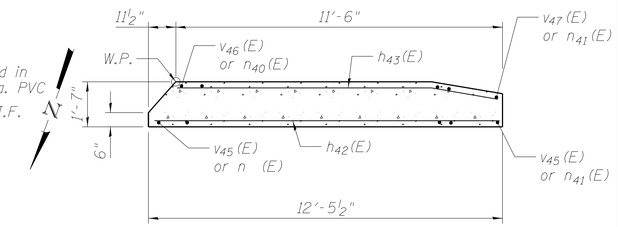

SECTION E-E

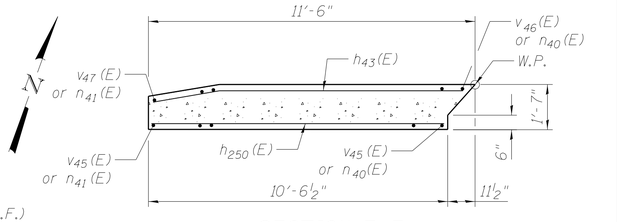

SECTION F-F

Notes:

Hatched area to be poured after superstructure false work has been removed. Quantity of concrete included with Concrete Superstructure.

Space reinforcement in cap to miss anchor bolts.

Pour steps monolithically with cap.

Quantity of concrete in end post included with Concrete Superstructure on sheet S23 of S71.

For Concrete Encasement details, see sheet S65 of S71.

For view C-C see sheet of S46 of S71.

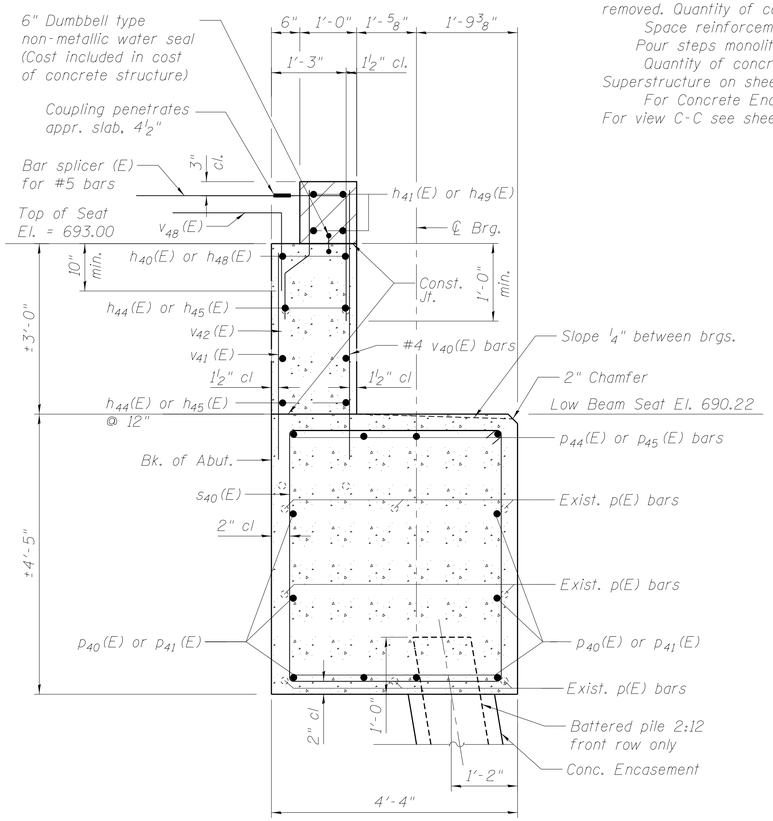

SECTION A-A

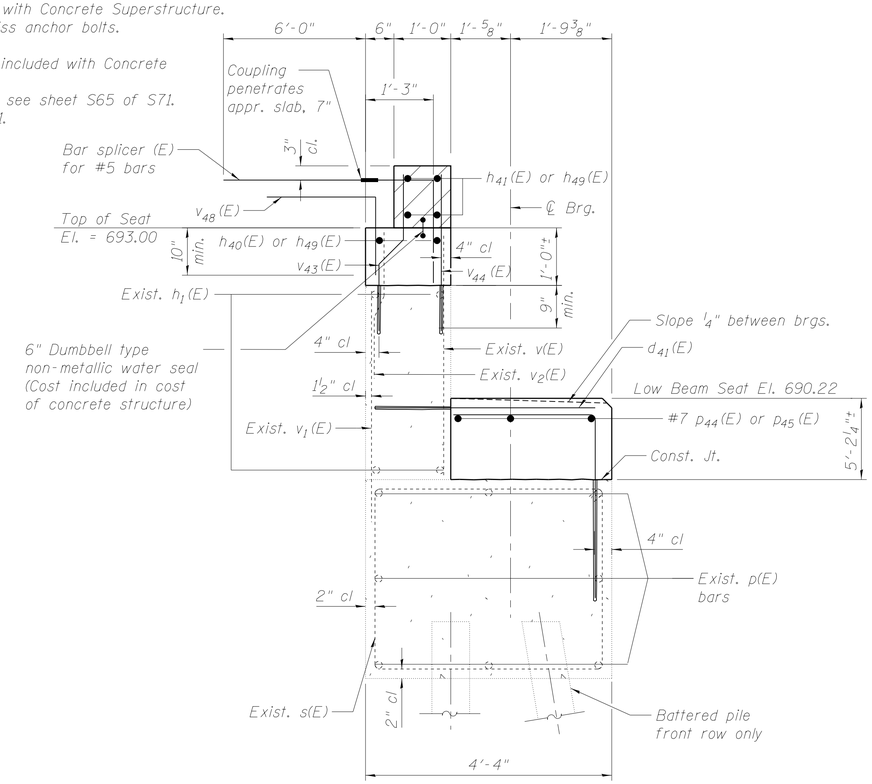

SECTION B-B

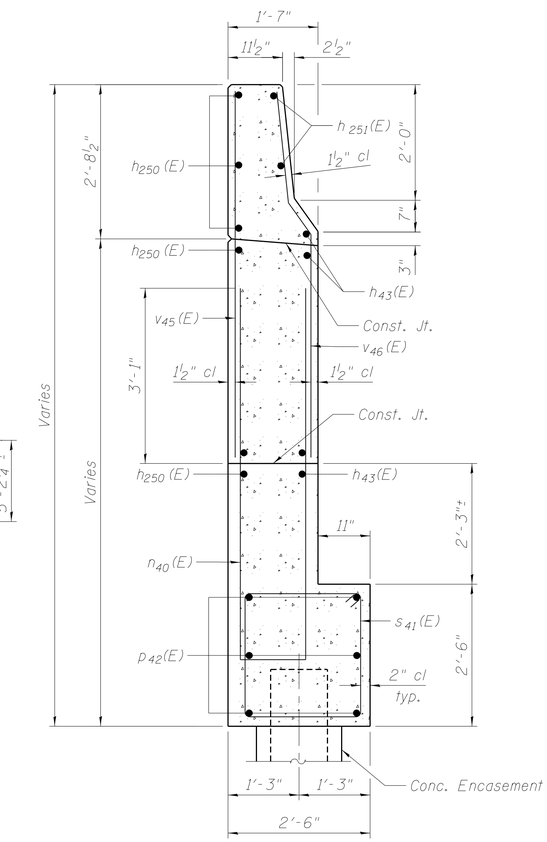

SECTION D-D

TERRA ENGINEERING LTD.	USER NAME =	DESIGNED - EA	REVISED
		CHECKED - OY	REVISED
	PLOT SCALE =	DRAWN - CM	REVISED
	PLOT DATE =	CHECKED - JB	REVISED

STATE OF ILLINOIS
DEPARTMENT OF TRANSPORTATION

WEST ABUTMENT – SOUTHBOUND SHEET 3
STRUCTURE NOS. 038 – 0013 & 0014

SHEET NO. S47 OF S71 SHEETS

F.A.I. RTE.	SECTION	COUNTY	TOTAL SHEETS	SHEET NO.
57	38-2HVB, HVBR-1	IROQUOIS	146	86
		CONTRACT NO. 66942		
		ILLINOIS FED. AID PROJECT		

M:\57 OVER CNRR & OLD 45\Drawings\CADD Drawings\Structural\Final Plans\SHTS\0366942-047-W-Abutment-SB.dgn