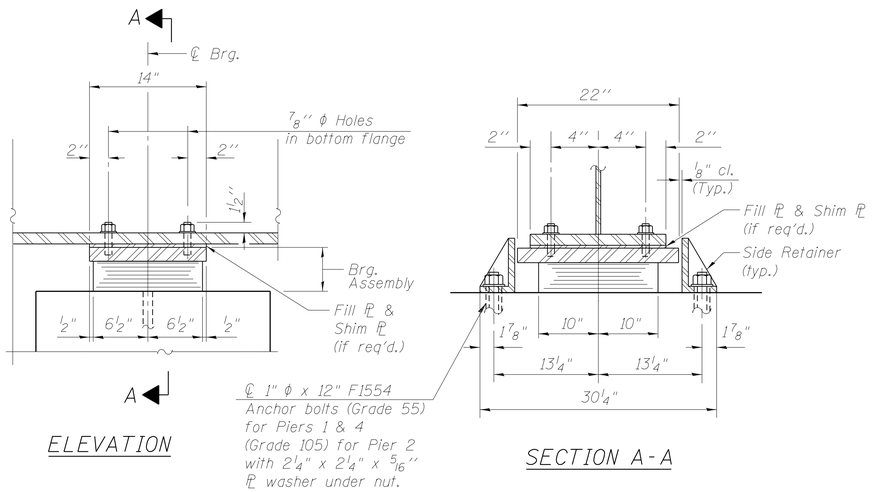

ELEVATION

SECTION A-A

TYPE I ELASTOMERIC EXP. BRG.
OVER PIER 1, 2, AND 4

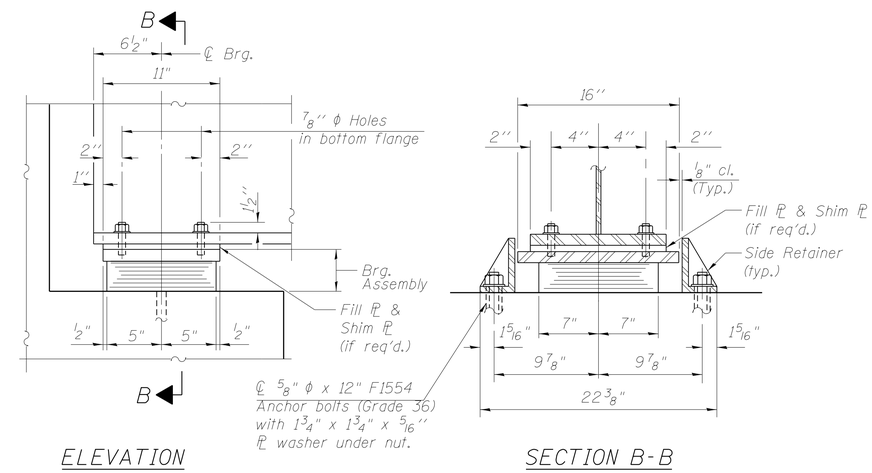

ELEVATION

SECTION B-B

TYPE I ELASTOMERIC EXP. BRG.
OVER W. ABUTMENT

FILL PLATES

Beam	E. Abut.	Pier 1	Pier 2	Pier 3	Pier 4	W. Abut.
1						
2						
3	5/8"					
4				1/2"	1/4"	1/8"
5						
6						
7						
8						
9						
10	1/2"	5/8"				1/2"
11	1/8"	3/8"		3/8"	3/8"	1"
12						
13						
14						

Notes:

Anchor bolts shall be ASTM F1554 all-thread (or an Engineer-approved alternate material) of the grade(s) and diameter(s) specified. The corresponding specified grade of AASHTO M314 anchor bolts may be used in lieu of ASTM F1554.

Anchor bolts for side retainers may be cast in place or installed in holes drilled before or after members are in place.

Drilled and set anchor bolts shall be installed according to Article 521.06 of the Standard Specifications.

Side retainers and other steel members required for the elastomeric bearing assembly shall be included in the cost of Elastomeric Bearing Assembly, Type I.

The structural steel plates of the Bearing Assembly shall conform to the requirements of AASHTO M 270 Grade 50.

Two 1/8 in. adjusting shims shall be provided for each bearing in addition to all other plates or shims and placed as shown on bearing details.

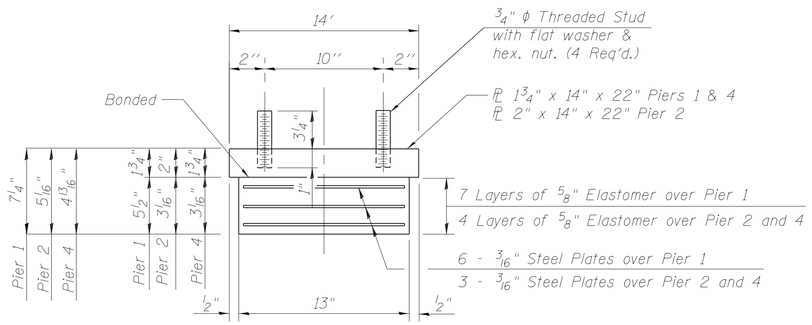

BEARING ASSEMBLY

Note:

Shim plates shall not be placed under Bearing Assembly.

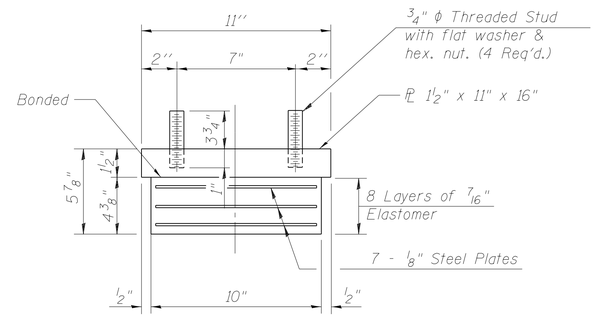

BEARING ASSEMBLY

Note:

Shim plates shall not be placed under Bearing Assembly.

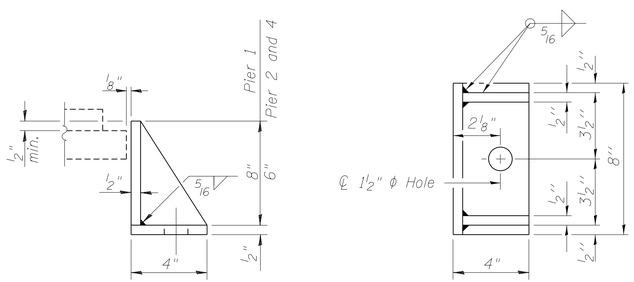

SIDE RETAINER

Equivalent rolled angle with stiffeners will be allowed in lieu of welded plates.

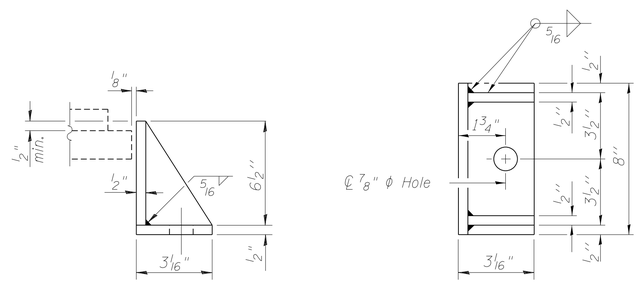

SIDE RETAINER

Equivalent rolled angle with stiffeners will be allowed in lieu of welded plates.

BILL OF MATERIAL

Item	Unit	Total
Elastomeric Bearing Assembly Type I	Each	56
Anchor Bolts, 5/8"	Each	28
Anchor Bolts, 1"	Each	84

M:\1 57 OVER CNNR & OLD 45\Drawings\CADD Drawings\Structural\Final Plans\SHTS\D366942-032-bearing_details.dgn

TERRA ENGINEERING LTD.

USER NAME =	DESIGNED - EA	REVISED
	CHECKED - OY	REVISED
PLOT SCALE =	DRAWN - CM	REVISED
PLOT DATE =	CHECKED - JB	REVISED

STATE OF ILLINOIS
DEPARTMENT OF TRANSPORTATION

BEARING DETAILS
STRUCTURE NOS. 038 - 0013 & 0014

SHEET NO. S32 OF S71 SHEETS

F.A.I. RTE.	SECTION	COUNTY	TOTAL SHEETS	SHEET NO.
57	38-2HVB, HVBR-1	IROQUOIS	146	71

CONTRACT NO. 66942

ILLINOIS FED. AID PROJECT