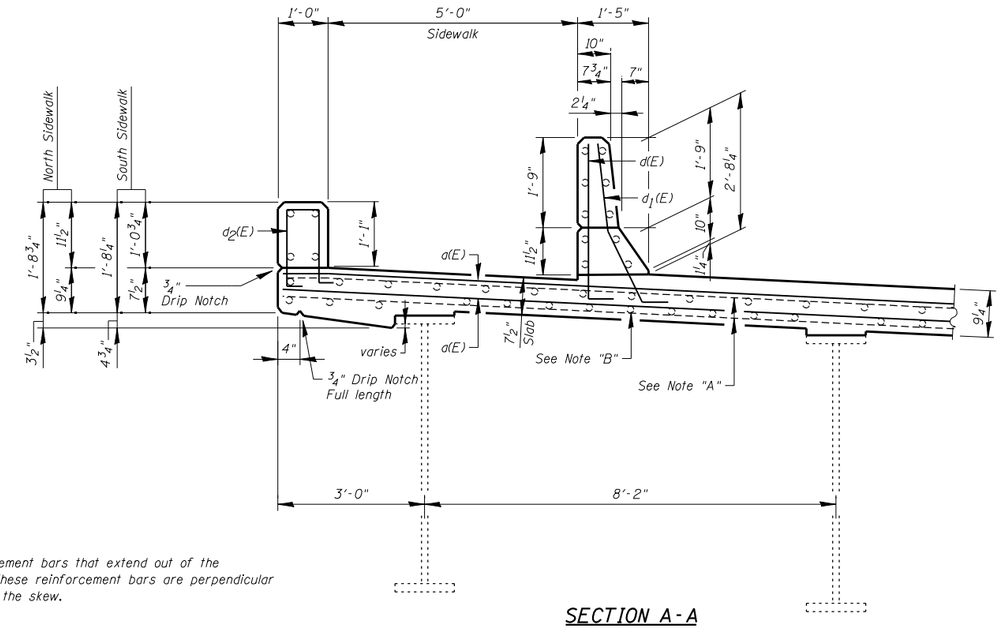

SECTION A-A THRU SOUTH SIDEWALK

(North Sidewalk - similar)
(Looking West)

NOTE "A":

Existing transverse reinforcement bars that extend out of the removal area shall remain. These reinforcement bars are perpendicular to ℄ IL. 53. not parallel to the skew.

NOTE "B":

Existing longitudinal reinforcement bars to remain.

Notes:
All horizontal dimensions are given radially.
All dimensions and reinforcement bar call outs are the same for North sidewalk and South sidewalk, except as noted.

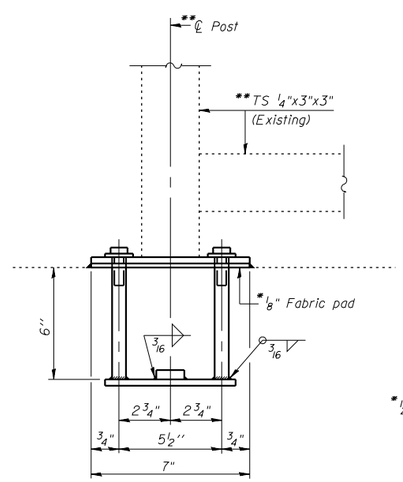

ELEVATION

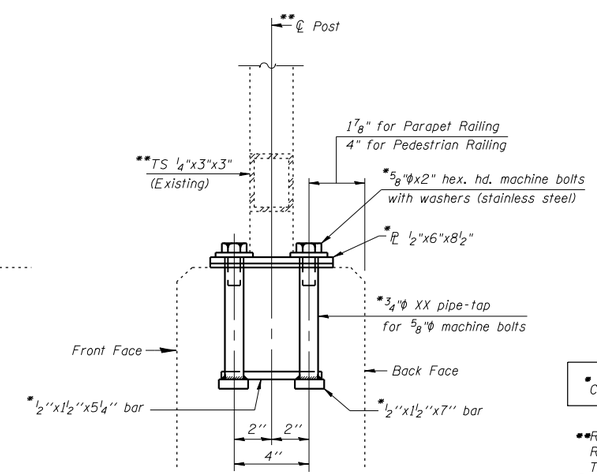

SECTION

RAIL POST REMOVAL & REPLACEMENT DETAILS FOR PARAPET RAILING & PEDESTRIAN RAILING

*Cost included with Concrete Superstructure

**Remove and store rails in the concrete removal area prior to concrete removal.
Remove and store rail post in the concrete removal area.
The Contractor must verify locations & sizes of existing holes prior to ordering 3/4"φ XX pipes. bars. cap screws & standard flat washers.
Reinstall rails after concrete superstructure is completed. Cost included with Concrete Superstructure.
In lieu of the cast-in-place anchor device shown. the Contractor has the option of drilling and setting stainless steel anchor rods of the same diameter and grade as the specified cap screws according to Article 509.06 of the Standard Specifications. Embedment shall be according to the manufacturer's specifications. Cost included with Concrete Superstructure.

FILE NAME = u:\102918.il.53 (baltimore)\structural\cadd sheets\D160R63-12-jt-recon.east.abut-II.dgn

CHRISTIAN-ROGE & ASSOCIATES, INC.	USER NAME = IDOT	DESIGNED - J.C.N./B.N.S.	REVISED -	STATE OF ILLINOIS DEPARTMENT OF TRANSPORTATION
		CHECKED - B.N.S./J.C.N.	REVISED -	
	PLOT SCALE = 100.000000 ' / IN.	DRAWN - F.M.	REVISED -	
	PLOT DATE = 1/7/2013	DATE - OCTOBER 9, 2012	REVISED -	

JOINT RECONSTRUCTION DETAILS AT EAST ABUTMENT-II
STRUCTURE NO. 099-0272

SHEET NO. S12 OF S19 SHEETS

F.A.P. RTE.	SECTION	COUNTY	TOTAL SHEETS	SHEET NO.
846	K-29-A-BR-1	WILL	55	41
		CONTRACT NO. 60R63		
		ILLINOIS FED. AID PROJECT		