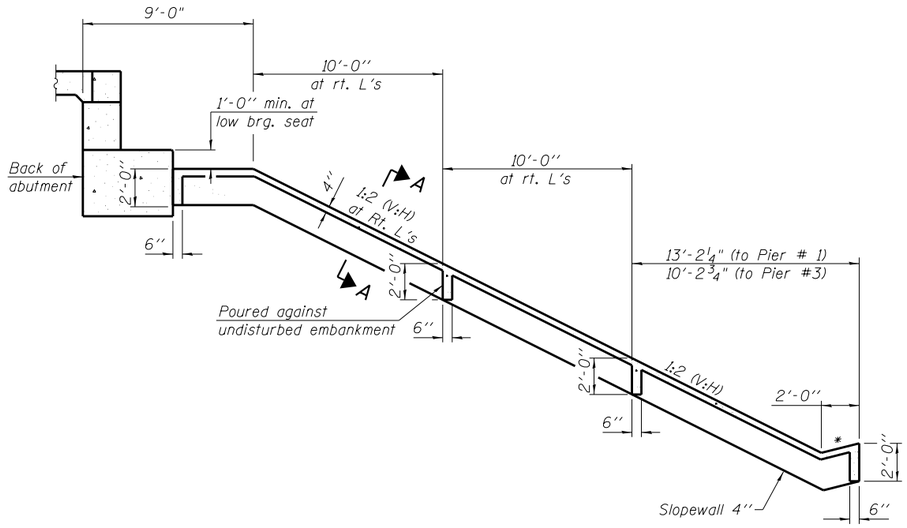

SECTION THRU
CONCRETE SLOPEWALL

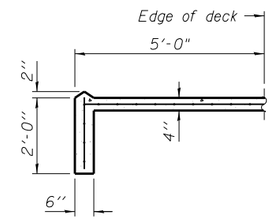

SECTION A-A

BILL OF MATERIAL

Item	Unit	Total
Slope Wall Removal	Sq. Yd.	452
Slope Wall, 4"	Sq. Yd.	452
Porous Granular Embankment	Cu. Yd.	20

Notes:

1. Slope wall shall be reinforced with welded wire fabric, 6"x6"-W4.0xW4.0, weighing 58 Lbs. per 100 Sf. Cost included in the pay item Slope Wall, 4".
2. Existing reinforcement shall be cleaned and incorporated inro the new construction. Cost included with Slope Wall Removal.
3. Existing and new welded wire fabric must be lapped a minimum of 6".
4. Porous granular embankment shall be used to in-fill void areas encountered beneath Slope Wall.

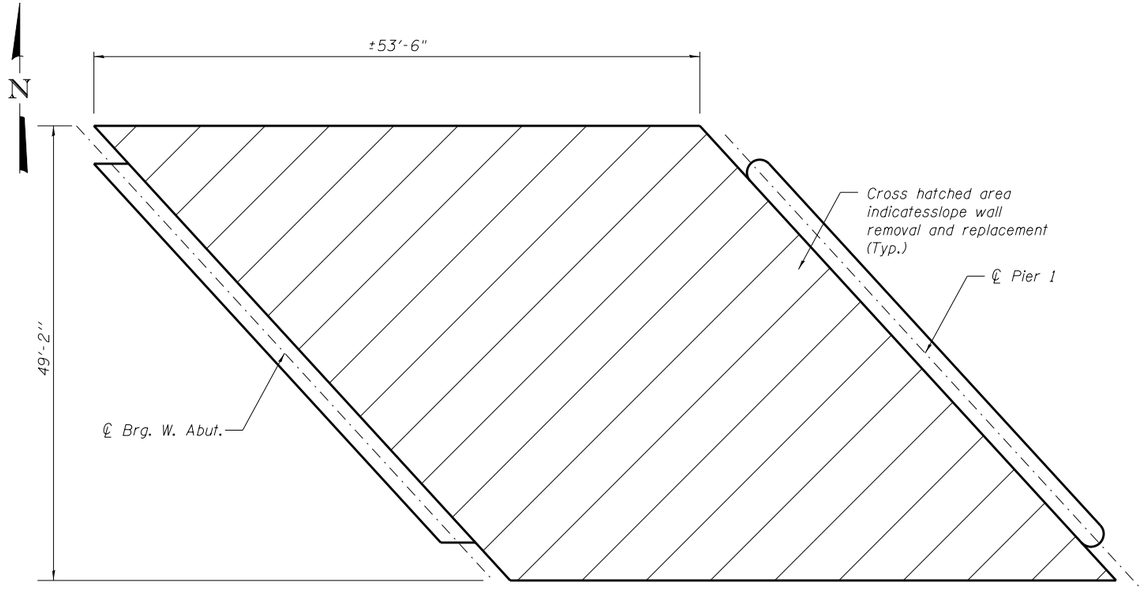

WEST SLOPEWALL PLAN

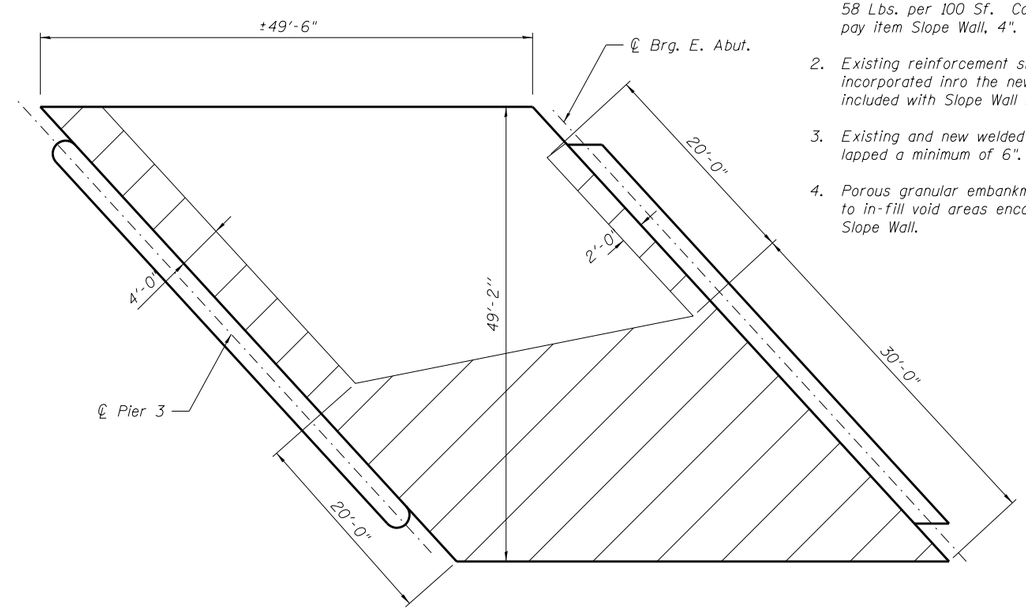

EAST SLOPEWALL PLAN

FILE NAME =	USER NAME =	DESIGNED - JMS	REVISED -	STATE OF ILLINOIS DEPARTMENT OF TRANSPORTATION	SLOPE WALL DETAILS STRUCTURE NO. 022-0090	F.A.U. RTE.	SECTION	COUNTY	TOTAL SHEETS / SHEET NO.
		CHECKED - JMH	REVISED -			290	22-3HB-I	DuPAGE	37 / 30
	PLOT SCALE =	DRAWN - DR	REVISED -					CONTRACT NO. 60M97	
	PLOT DATE =	CHECKED - JMH	REVISED -		SHEET NO. S15 OF S15 SHEETS		ILLINOIS	FED. AID PROJECT	