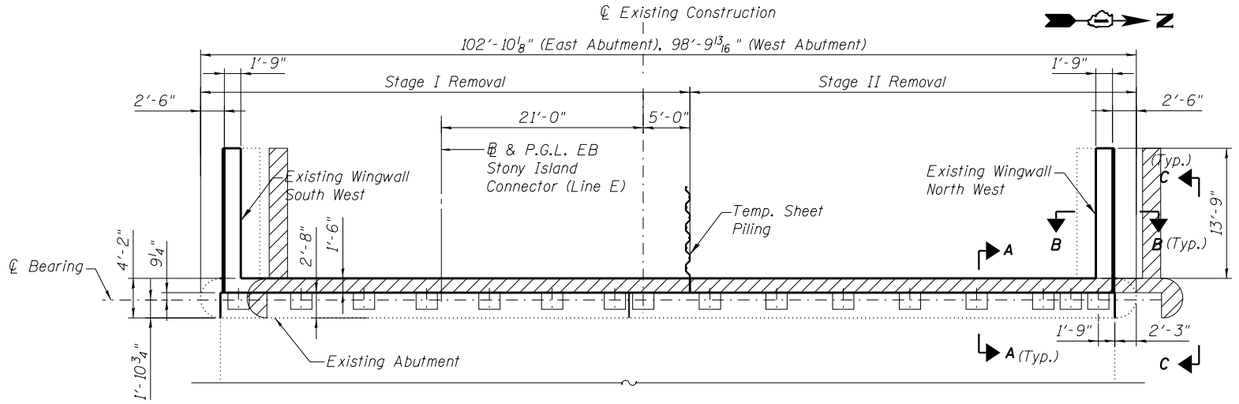

ABUTMENT PLAN

(West Abutment as Shown; East Abutment Similar, Opposite)

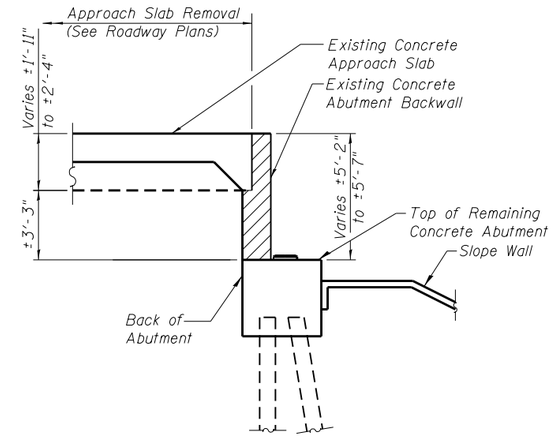

SECTION A-A

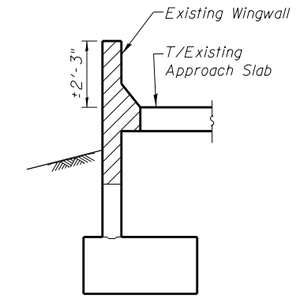

SECTION B-B

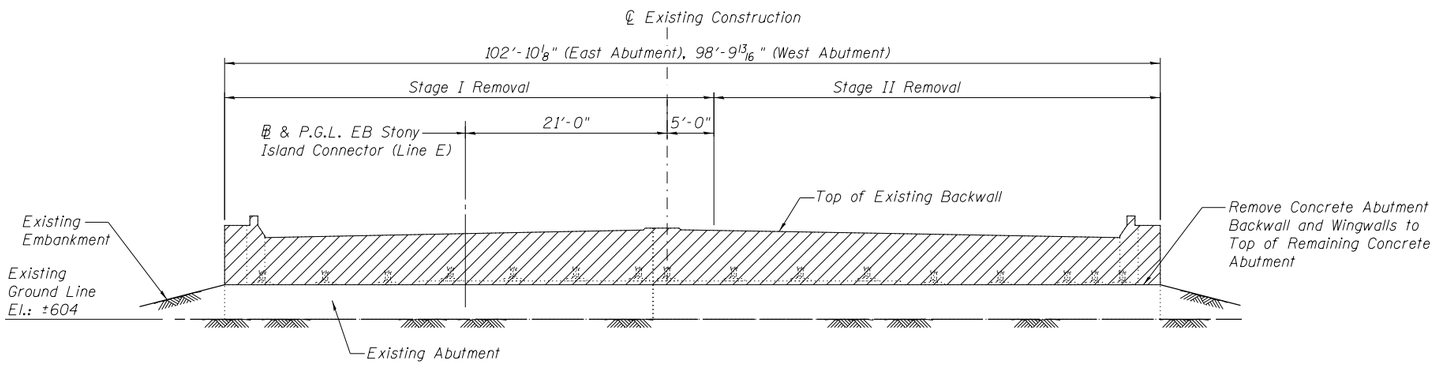

EXISTING ABUTMENT ELEVATION

(West Abutment as Shown; East Abutment Similar, Opposite)

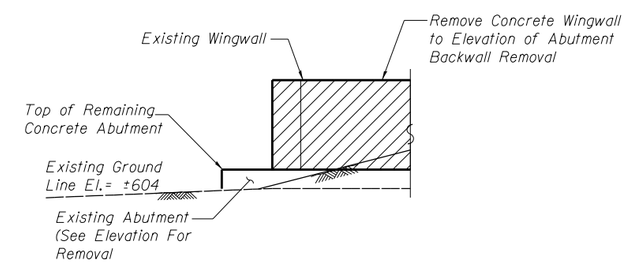

SECTION C-C

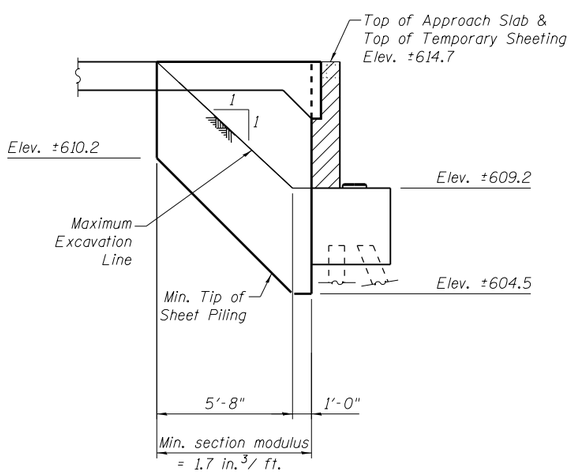

WEST ABUTMENT TEMPORARY SHEET PILING

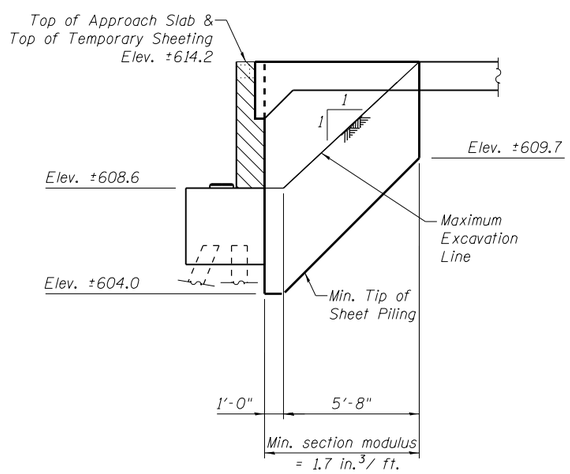

EAST ABUTMENT TEMPORARY SHEET PILING

LEGEND:

Concrete Removal

Temporary Sheet Piling

BILL OF MATERIAL		
ITEM	UNIT	QUANTITY
Concrete Removal	Cu Yd	70
Temporary Sheet Piling	Sq Ft	109

NOTE:

1. Existing reinforcement of existing abutments and wingwalls to be cut flush to match removal areas of concrete. Cost included with "Concrete Removal".
2. If the Contractor chooses to alter the Temporary Cantilivered Sheet Piling design requirements as shown in the details on this sheet, a design submittal including proposed details and structural calculations will be required for review and acceptance by the Engineer.
3. Excavate and backfill as required to perform the removals described herein. Cost included with "Concrete Removal".
4. Remove aluminum railing mounted on top of wingwall. Cost included with "Concrete Removal".