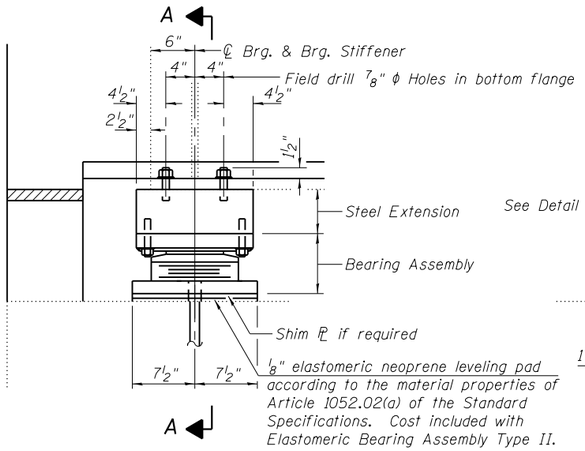

ELEVATION

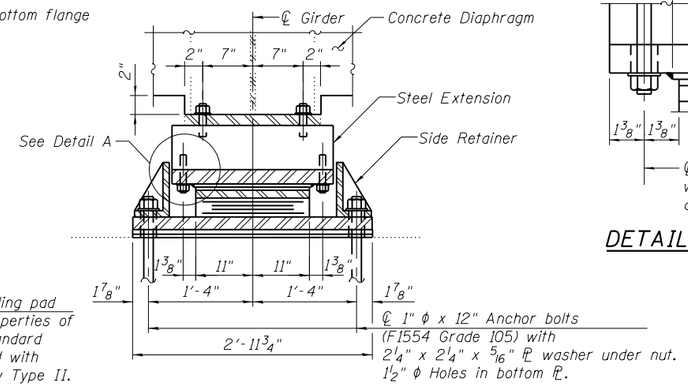

SECTION A-A

TYPE II ELASTOMERIC EXP. BRG.

At Abutments

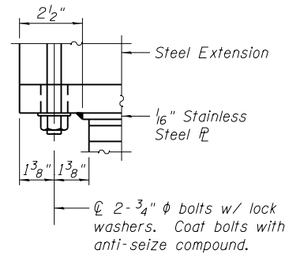

DETAIL A

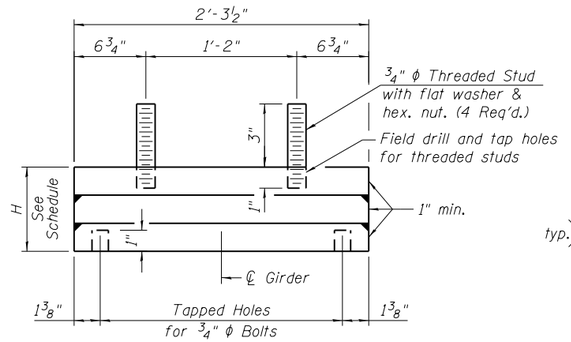

END VIEW STEEL EXTENSION

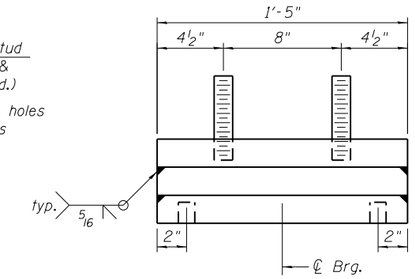

ELEVATION STEEL EXTENSION

STEEL EXTENSION SCHEDULE

Location		H
East Abutment	Girders 1 thru 8, Girder 12	3 1/2"
	Girders 9, 10, & 13	2 1/2"
	Girder 11	3"
West Abutment	Girders 1 thru 8, Girder 13	3 3/4"
	Girder 9	3 1/2"
	Girders 10 thru 12	4 1/4"

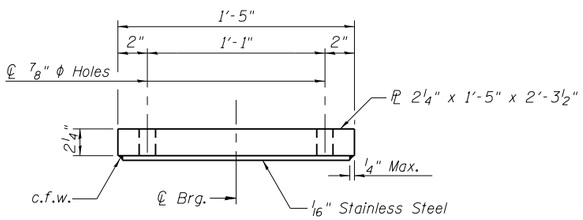

TOP BEARING ASSEMBLY

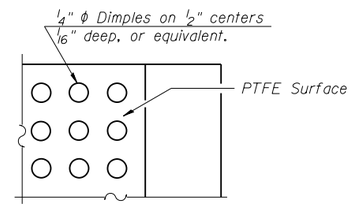

PLAN-PTFE SURFACE

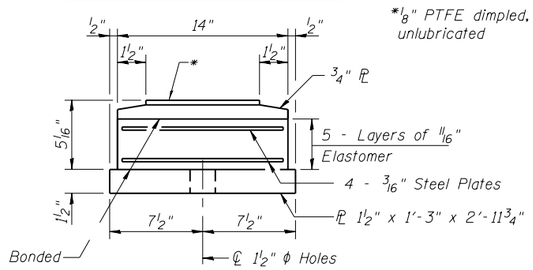

BOTTOM BEARING ASSEMBLY

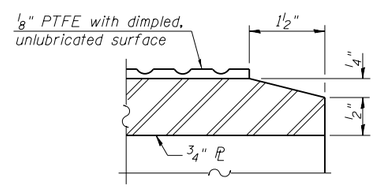

SECTION THRU PTFE

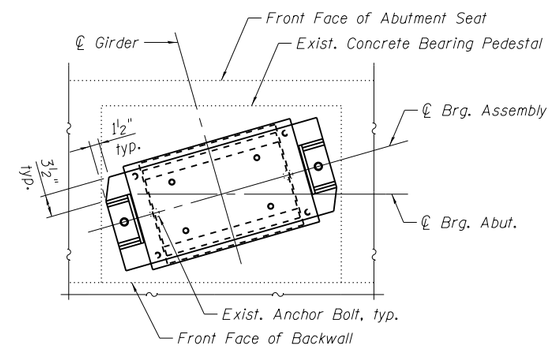

BOTTOM BEARING ℙ CLIP DETAIL

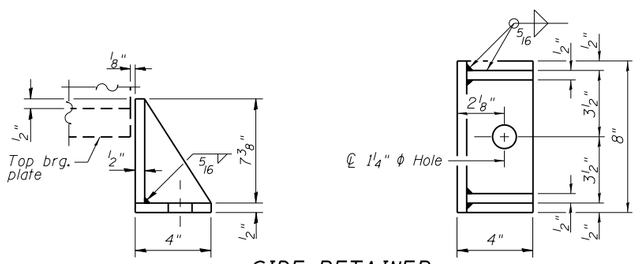

SIDE RETAINER

Equivalent rolled angle with stiffeners will be allowed in lieu of welded plates.

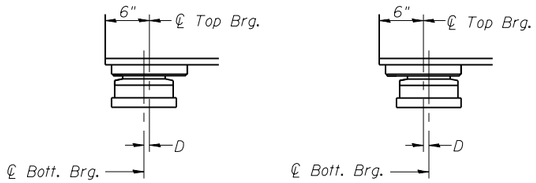

BELOW 50°F.
(Move bott. brg. away from fixed brg.)

ABOVE 50°F.
(Move bott. brg. toward fixed brg.)

SETTING ANCHOR BOLTS AT EXP. BRG.

D=1/8" per each 100' of expansion for every 15° temp. change from the normal temp. of 50°F.

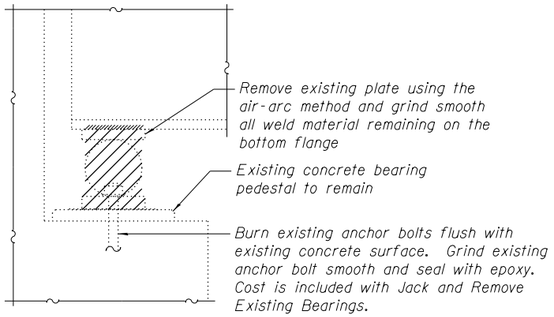

EXISTING BEARING REMOVAL

Notes:

Anchor bolts shall be ASTM F1554 all-thread (or an Engineer-approved alternate material) of the grade(s) and diameter(s) specified. The corresponding specified grade of AASHTO M314 anchor bolts may be used in lieu of ASTM F1554.

Anchor bolts for Type II bearings shall be placed in holes drilled in the concrete through holes in the bottom bearing plate after bearings are in place. Side retainers shall be placed after bolts are installed.

Drilled and set anchor bolts shall be installed according to Article 521.06 of the Standard Specifications.

Side retainers and other steel members required for the elastomeric bearing assembly shall be included in the cost of Elastomeric Bearing Assembly, Type II.

The 1/8" PTFE sheet shall be bonded directly to the top steel plate with a two-component, medium viscosity epoxy resin, conforming to the requirements of the Federal Specification MMM-A-134, Type I. The bond agent shall be applied on the full area of the contact surfaces.

Bonding of 1/8" PTFE sheet during vulcanizing process will be permitted provided the process and method of adjusting assembly height is approved by the Engineer.

Cost of threaded studs, bolts, nuts, washers, anti-seize compound and field drilling & tapping holes shall be included in the cost of Elastomeric Bearing Assembly, Type II.

Cost of the steel extensions shall be included with Furnishing and Erecting Structural Steel.

See Sheet S-28 for Jack and Remove Existing Bearings Procedure.

Two 1/8 in. adjusting shims shall be provided for each bearing in addition to all other plates or shims and placed as shown on bearing details.

Prior to ordering any material, the Contractor shall verify in the field all existing bearing height and shim thickness dimensions and adjust the proposed steel extension heights as required.

BILL OF MATERIAL

Item	Unit	Total
Elastomeric Bearing Assembly Type II	Each	26
Anchor Bolts, 1"	Each	52
Jack and Remove Existing Bearings	Each	26