TRAFFIC SIGNAL MAST ARM AND SIGNAL POST

MAST ARM MOUNTED SIGNALS IN EXISTING, PROPOSED OR FUTURE SIDEWALK/BICYCLE PATH AREA. INTERSECTION SHOWN WITH PEDESTRIAN SIGNALS AND PEDESTRIAN PUSHBUTTON DETECTORS.

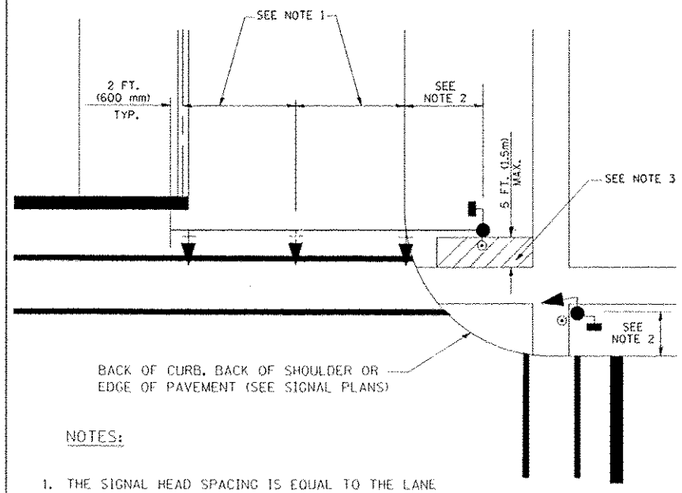

NOTES:

1. THE SIGNAL HEAD SPACING IS EQUAL TO THE LANE WIDTH OR AS SHOWN ON THE TRAFFIC SIGNAL PLAN.
2. REFER TO THE TRAFFIC SIGNAL EQUIPMENT OFFSET TABLE.
3. PROVIDE A LEVEL ALL-WEATHER SURFACE (CONCRETE SIDEWALK, ASPHALT BICYCLE PATH SURFACE OR MATCHING MATERIAL TO THE ADJACENT SURFACE) UP TO THE MAST ARM SHAFT OR THE SIGNAL POST.
4. THE FACE OF THE PEDESTRIAN PUSHBUTTON SHALL BE PARALLEL TO THE CROSSWALK TO BE USED.
5. THE LOCATIONS AND INSTALLATION OF PEDESTRIAN SIGNAL HEADS AND PEDESTRIAN PUSHBUTTONS SHALL MEET THE REQUIREMENTS OF THE MUTCD AND INFORMATION FOUND IN THE "AMERICANS WITH DISABILITIES ACT ACCESSIBILITY GUIDELINES FOR BUILDINGS AND FACILITIES."

PEDESTRIAN SIGNAL POST AND PEDESTRIAN PUSH BUTTON POST

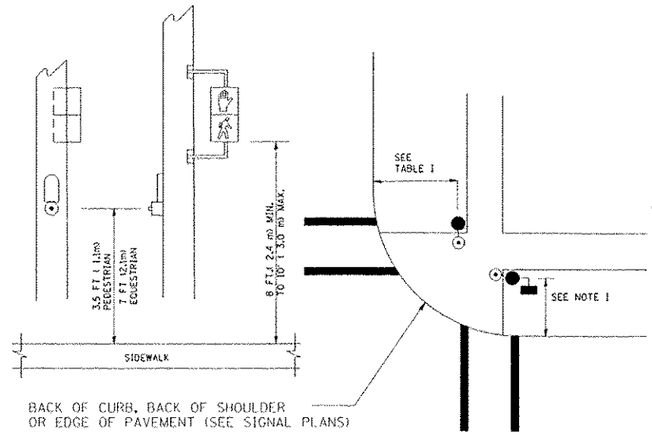

NOTES:

1. REFER TO THE TRAFFIC SIGNAL EQUIPMENT OFFSET TABLE.
2. PROVIDE A LEVEL ALL-WEATHER SURFACE (CONCRETE SIDEWALK, ASPHALT BICYCLE PATH SURFACE OR MATCHING MATERIAL TO THE ADJACENT SURFACE) UP TO THE PEDESTRIAN SIGNAL POST OR THE PEDESTRIAN PUSH BUTTON POST.
3. THE FACE OF THE PEDESTRIAN PUSHBUTTON SHALL BE PARALLEL TO THE CROSSWALK TO BE USED.
4. THE LOCATIONS AND INSTALLATION OF PEDESTRIAN SIGNAL HEADS AND PEDESTRIAN PUSHBUTTONS SHALL MEET THE REQUIREMENTS OF THE MUTCD AND INFORMATION FOUND IN THE "AMERICANS WITH DISABILITIES ACT ACCESSIBILITY GUIDELINES FOR BUILDINGS AND FACILITIES."

RECOMMENDED PUSHBUTTON LOCATIONS

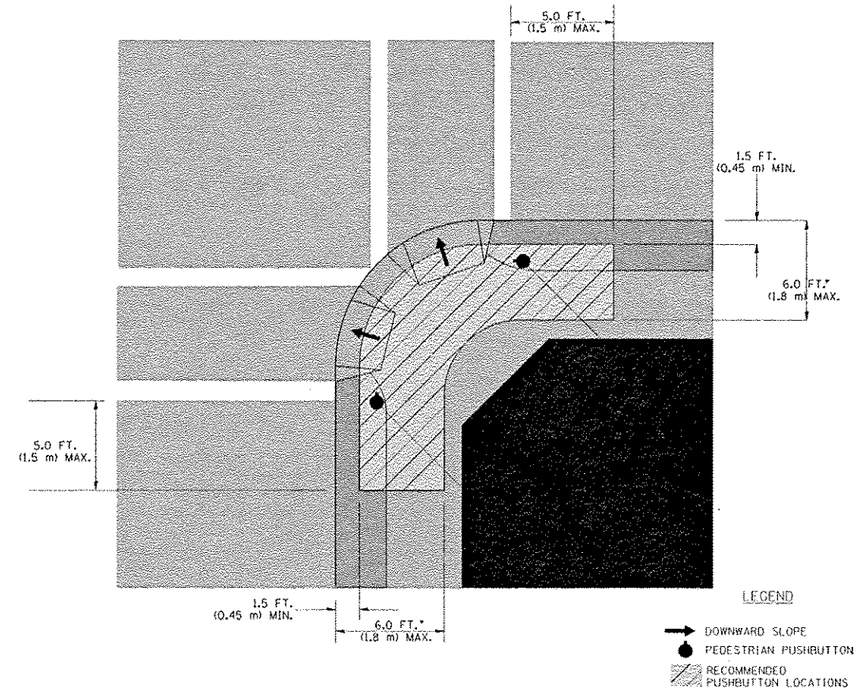

* WHERE THERE ARE CONSTRAINTS THAT MAKE IT IMPRACTICAL TO PLACE THE PEDESTRIAN PUSHBUTTON BETWEEN 1.5 FT (0.45 m) AND 6 FT (1.8 m) FROM THE EDGE OF THE CURB, SHOULDER, OR PAVEMENT, IT SHOULD NOT BE FURTHER THAN 10 FT (3 m) FROM THE EDGE OF CURB, SHOULDER, OR PAVEMENT.

** WHERE THERE ARE CONSTRAINTS ON A PARTICULAR CORNER THAT MAKE IT IMPRACTICAL TO PROVIDE THE 10 FT (3 m) SEPERATION BETWEEN THE TWO PEDESTRIAN PUSHBUTTONS, THE PUSHBUTTONS MAY BE PLACED CLOSER TOGETHER OR ON THE SAME POLE.

NOTES:

1. PEDESTRIAN SIGNAL HEADS SHALL BE MOUNTED WITH THE BOTTOM OF THE SIGNAL HOUSING INCLUDING BRACKETS NOT LESS THAN 8 FT (2.4 m) OR MORE THAN 10 FT (3 m) ABOVE SIDEWALK LEVEL, AND SHALL BE POSITIONED AND ADJUSTED TO PROVIDE MAXIMUM VISIBILITY AT THE BEGINNING OF THE CONTROLLED CROSSWALK.
2. THE BOTTOM OF THE SIGNAL HOUSING (INCLUDING BRACKETS) OF A VEHICULAR SIGNAL FACE THAT IS NOT LOCATED OVER A HIGHWAY SHALL BE AT LEAST 8 FT (2.4 m) BUT NOT MORE THAN 19 FT (5.8 m) ABOVE THE SIDEWALK OR, IF THERE IS NO SIDEWALK, ABOVE THE PAVEMENT GRADE AT THE CENTER OF THE ROADWAY.
3. THE BOTTOM OF THE SIGNAL HOUSING AND ANY RELATED ATTACHMENTS TO A SIGNAL FACE LOCATED OVER ANY PORTION OF A HIGHWAY SHALL BE ACCORDING TO CURRENT STATE STANDARDS 877001, 877002, 877006, 877011 AND 877012 WITH A MINIMUM OF 16 FT (5.0 m) AND A MAXIMUM OF 18 FT. (5.5 m) FROM THE HIGHEST POINT OF PAVEMENT.
4. THE BOTTOM OF THE TEMPORARY SPAN WIRE MOUNTED SIGNAL HOUSING AND ANY RELATED ATTACHMENTS TO A SIGNAL FACE LOCATED OVER ANY PORTION OF A HIGHWAY SHALL BE ACCORDING TO CURRENT STATE STANDARD 880001 WITH A MINIMUM OF 17 FT (5.18 m) FROM THE HIGHEST POINT OF PAVEMENT.
5. THE TOP OF THE SIGNAL HOUSING OF A SIGNAL FACE LOCATED OVER ANY PORTION OF A HIGHWAY SHALL NOT BE MORE THAN 25.6 FT (7.8 m) ABOVE THE PAVEMENT.

TRAFFIC SIGNAL EQUIPMENT OFFSET

TRAFFIC SIGNAL EQUIPMENT	COMBINATION CONCRETE CURB AND GUTTER (MINIMUM DISTANCE FROM BACK OF CURB TO CENTERLINE OF FOUNDATION)	SHOULDER/NON-CURBED AREA (MINIMUM DISTANCE FROM EDGE OF PAVEMENT TO CENTERLINE OF FOUNDATION)
TRAFFIC SIGNAL MAST ARM POLE	6 FT (1.8m)	SHOULDER WIDTH + 2 FT (0.6m), MINIMUM 10 FT (3.0m)
TRAFFIC SIGNAL POST	4 FT (1.2m)	SHOULDER WIDTH + 2 FT (0.6m), MINIMUM 10 FT (3.0m)
PEDESTRIAN SIGNAL POST	4 FT (1.2m)	SHOULDER WIDTH + 2 FT (0.6m), MINIMUM 10 FT (3.0m)
PEDESTRIAN PUSHBUTTON POST	4 FT (1.2m)	SHOULDER WIDTH + 2 FT (0.6m), MINIMUM 10 FT (3.0m)
TEMPORARY WOOD POLE	6 FT (1.8m)	SHOULDER WIDTH + 2 FT (0.6m), MINIMUM 10 FT (3.0m)
CONTROLLER CABINET	6 FT (1.8m) MINIMUM DISTANCE SEE NOTE 2	SHOULDER WIDTH + 6 FT (1.8m), MINIMUM 16 FT (4.9m) SEE NOTE 3.
SERVICE INSTALLATION, GROUND MOUNT	6 FT (1.8m) MINIMUM DISTANCE SEE NOTE 2	SHOULDER WIDTH + 6 FT (1.8m), MINIMUM 16 FT (4.9m) SEE NOTE 3.

NOTES:

1. CONTACT THE "AREA TRAFFIC SIGNAL MAINTENANCE AND OPERATIONS ENGINEER" FOR ASSISTANCE IN LOCATING THE TRAFFIC SIGNAL EQUIPMENT WHEN THERE ARE CONFLICTS WITH DITCHES OR THE MINIMUM OFFSET DISTANCES CANNOT BE MET.
2. MINIMUM DISTANCE FROM THE BACK OF CURB TO THE ROADWAY SIDE OF THE FOUNDATION.
3. MINIMUM DISTANCE FROM THE EDGE OF PAVEMENT TO THE ROADWAY SIDE OF THE FOUNDATION.
4. ANY CHANGES TO THE OFFSETS OF THE FOUNDATIONS, FROM THE MINIMUM DISTANCES LISTED IN THE "TRAFFIC SIGNAL EQUIPMENT OFFSET" CHART AND THE TRAFFIC SIGNAL INSTALLATION PLAN, COULD EFFECT THE PLACEMENT OF THE SIGNAL HEADS, PEDESTRIAN SIGNAL HEADS AND THE PEDESTRIAN PUSHBUTTONS. THE SIGNAL HEAD PLACEMENT ON THE MAST ARMS SHALL REMAIN AS PER THE TRAFFIC SIGNAL INSTALLATION PLAN AND THE "TRAFFIC SIGNAL MAST ARM AND SIGNAL POST" DETAIL ABOVE. THE PROPOSED MAST ARM LENGTHS MAY NEED TO BE REVISED TO MEET THE ABOVE REQUIREMENTS. THE PEDESTRIAN SIGNAL HEADS AND PEDESTRIAN PUSHBUTTONS MUST MEET THE REQUIREMENTS UNDER THE DETAILS ON THIS SHEET.