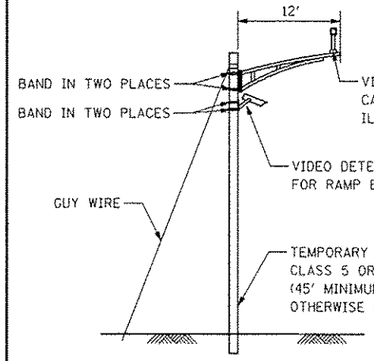

TEMPORARY VIDEO DETECTION MOUNTING DETAIL

NOT TO SCALE

NOTE: EACH VIDEO CAMERA SHALL BE MOUNTED ON A 12' ALUMINUM MAST ARM OR WOOD POLE AS INDICATED ABOVE. THIS WORK WILL BE INCLUDED IN THE COST FOR TEMPORARY TRAFFIC SIGNAL INSTALLATION.

INCIDENTAL TO TEMPORARY TRAFFIC SIGNAL INSTALLATION

SCALE IN FEET

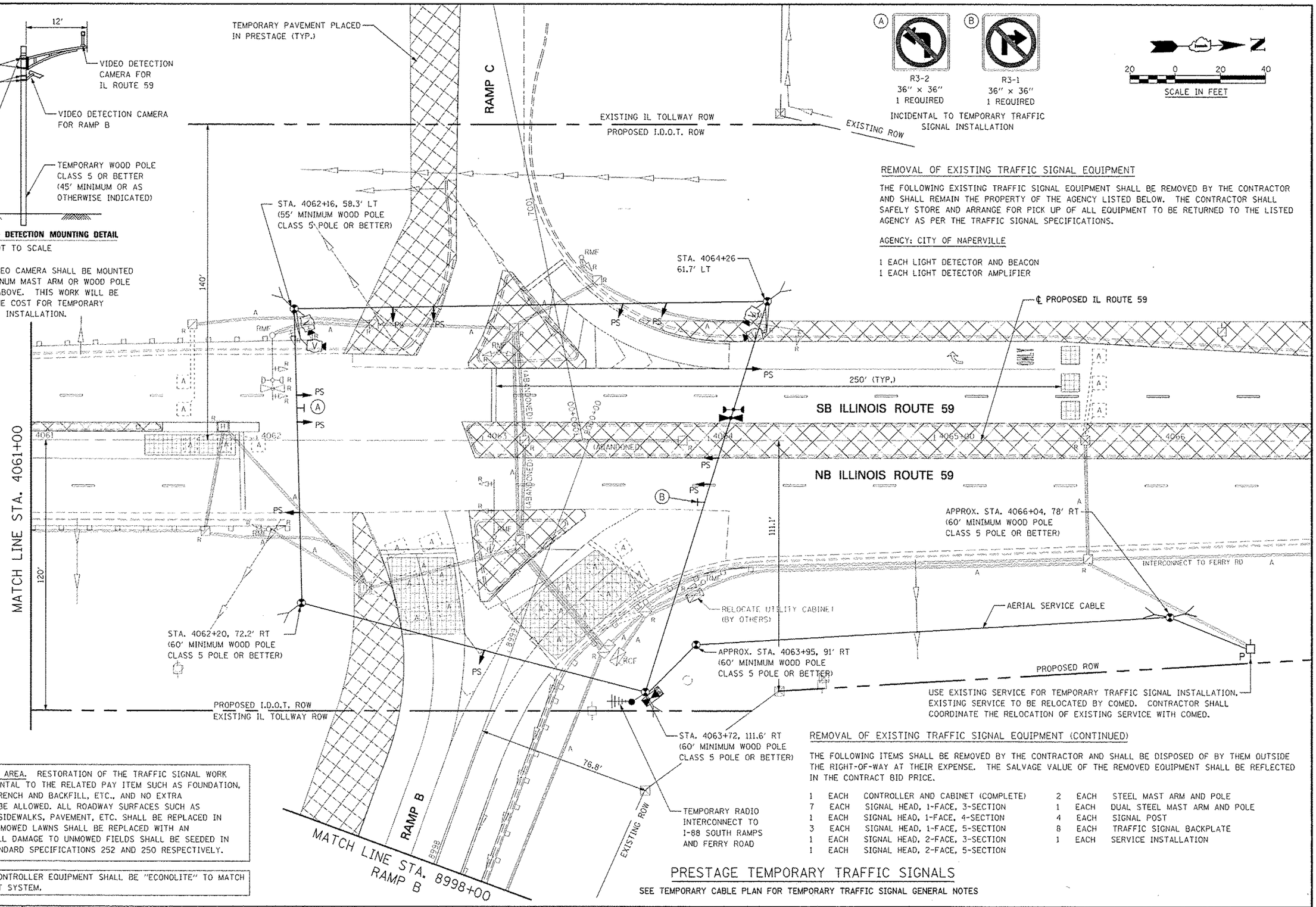

USE EXISTING SERVICE FOR TEMPORARY TRAFFIC SIGNAL INSTALLATION. EXISTING SERVICE TO BE RELOCATED BY COMED. CONTRACTOR SHALL COORDINATE THE RELOCATION OF EXISTING SERVICE WITH COMED.

REMOVAL OF EXISTING TRAFFIC SIGNAL EQUIPMENT

THE FOLLOWING EXISTING TRAFFIC SIGNAL EQUIPMENT SHALL BE REMOVED BY THE CONTRACTOR AND SHALL REMAIN THE PROPERTY OF THE AGENCY LISTED BELOW. THE CONTRACTOR SHALL SAFELY STORE AND ARRANGE FOR PICK UP OF ALL EQUIPMENT TO BE RETURNED TO THE LISTED AGENCY AS PER THE TRAFFIC SIGNAL SPECIFICATIONS.

AGENCY: CITY OF NAPERVILLE

1 EACH LIGHT DETECTOR AND BEACON
1 EACH LIGHT DETECTOR AMPLIFIER

REMOVAL OF EXISTING TRAFFIC SIGNAL EQUIPMENT (CONTINUED)

THE FOLLOWING ITEMS SHALL BE REMOVED BY THE CONTRACTOR AND SHALL BE DISPOSED OF BY THEM OUTSIDE THE RIGHT-OF-WAY AT THEIR EXPENSE. THE SALVAGE VALUE OF THE REMOVED EQUIPMENT SHALL BE REFLECTED IN THE CONTRACT BID PRICE.

1	EACH	CONTROLLER AND CABINET (COMPLETE)	2	EACH	STEEL MAST ARM AND POLE
7	EACH	SIGNAL HEAD, 1-FACE, 3-SECTION	1	EACH	DUAL STEEL MAST ARM AND POLE
1	EACH	SIGNAL HEAD, 1-FACE, 4-SECTION	4	EACH	SIGNAL POST
3	EACH	SIGNAL HEAD, 1-FACE, 5-SECTION	8	EACH	TRAFFIC SIGNAL BACKPLATE
1	EACH	SIGNAL HEAD, 2-FACE, 3-SECTION	1	EACH	SERVICE INSTALLATION
1	EACH	SIGNAL HEAD, 2-FACE, 5-SECTION			

RESTORATION OF WORK AREA. RESTORATION OF THE TRAFFIC SIGNAL WORK AREA SHALL BE INCIDENTAL TO THE RELATED PAY ITEM SUCH AS FOUNDATION, CONDUIT, HANDHOLE, TRENCH AND BACKFILL, ETC., AND NO EXTRA COMPENSATION SHALL BE ALLOWED. ALL ROADWAY SURFACES SUCH AS SHOULDERS, MEDIANS, SIDEWALKS, PAVEMENT, ETC. SHALL BE REPLACED IN KIND. ALL DAMAGE TO MOWED LAWNS SHALL BE REPLACED WITH AN APPROVED SOD, AND ALL DAMAGE TO UNMOWED FIELDS SHALL BE SEEDED IN ACCORDANCE WITH STANDARD SPECIFICATIONS 252 AND 250 RESPECTIVELY.

THE TRAFFIC SIGNAL CONTROLLER EQUIPMENT SHALL BE "ECONOLITE" TO MATCH THE EXISTING ADJACENT SYSTEM.

PRESTAGE TEMPORARY TRAFFIC SIGNALS

SEE TEMPORARY CABLE PLAN FOR TEMPORARY TRAFFIC SIGNAL GENERAL NOTES

FILE NAME = $FILE1$	USER NAME = $USER$	DESIGNED MJM	REVISED -
		DRAWN KES	REVISED -
	PLOT SCALE = $SCALE$	CHECKED JCM	REVISED
	PLOT DATE = $DATE$	DATE 10/15/2012	REVISED

STATE OF ILLINOIS
DEPARTMENT OF TRANSPORTATION

TEMPORARY TRAFFIC SIGNAL INSTALLATION AND REMOVE EXISTING SIGNAL EQUIPMENT PLAN
ILLINOIS ROUTE 59 AND I-88 NORTH RAMPS

SCALE: AS SHOWN | SHEET NO. 1 OF 53 SHEETS | STA. | TO STA.

F.A.P. RTE.	SECTION	COUNTY	TOTAL SHEETS	SHEET NO.
338	(112 & 113) WRS-5	DUPAGE	963	416
	TS-1	CONTRACT NO. 60131		
		ILLINOIS FED. AID PROJECT		