06–13–2025 LETTING ITEM 189

F.A.I. RTE.	SECTION	COUNTY	TOTAL SHEETS	SHEET NO.
57	99-1HB-2-BR	WILL	133	1
	ILLINOIS	CONTRACT NO. 60R76		

STATE OF ILLINOIS
DEPARTMENT OF TRANSPORTATION

PROJECT IS LOCATED IN THE UNINCORPORATED MONEE TOWNSHIP JURISDICTION

FOR INDEX OF SHEETS, SEE SHEET NO. 2

PROPOSED HIGHWAY PLANS

FAI 57 AT PAULING ROAD
SECTION 99–1HB–2–BR
BRIDGE NEW DECK (SN 099–0204)
WILL COUNTY
C–91–209–12

TRAFFIC DATA:	EXISTING ADT	DESIGN SPEED	POSTED SPEED
PAULING ROAD (LOCAL ROAD)	1,800 (2019)	45	45
I–57 (INTERSTATE)	34,200(2021)	75	70

ATLAS ENGINEERING GROUP, LTD. Date: 03/06/2025 Behzad Amini PhD P.E. Expires: 11/30/2025 Sheet No.: 1-31, 34-47, 101-133	ATLAS ENGINEERING GROUP, LTD. Date: 03/06/2025 EAMON HOMIDI P.E., S.E. Expires: 11/30/2025 Sheet No.: 49-76, 92-100
HDR INC. Date: 03/06/2025 MICHAEL B. QUIRIN P.E., S.E. Expires: 11/30/2026 Sheet No.: 77-87, 89	BAXTER & WOODMAN CONSULTING ENGINEERS Date: 03/06/2025 ANTEA M. MITCHELL, P.E. Expires: 11/30/2025 Sheet No.: 32-33
HOH GROUP INC Date: 03/06/2025 BRETT A. PORIRJO P.E. Expires: 11/30/2025 Sheet No.: 88	

D-91-209-12

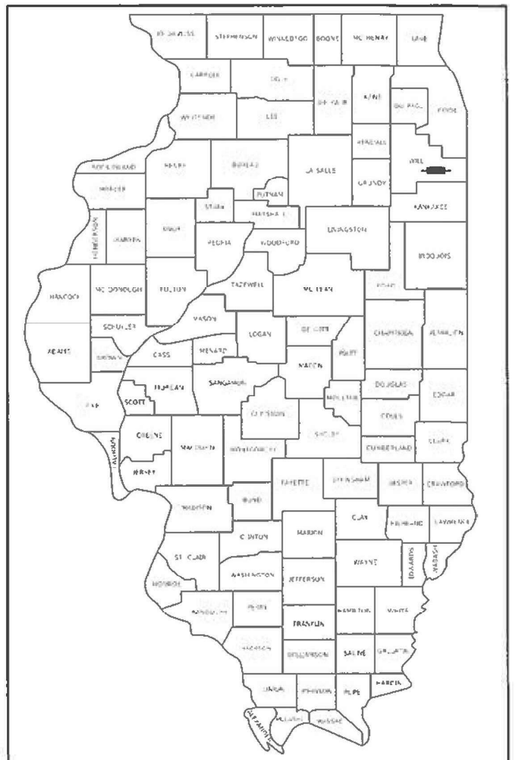

LOCATION OF SECTION INDICATED THUS:–

R 13 E

T 34 N

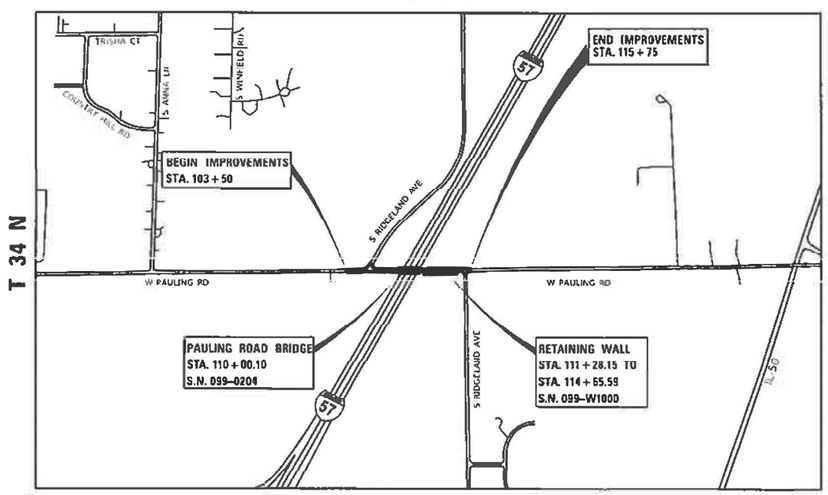

N

MONEE TOWNSHIP
LOCATION MAP (N.T.S.)

GROSS LENGTH = 1225 FT. = 0.23 MILE
NET LENGTH = 1225 FT. = 0.23 MILE

100' 200' 300' — 1" = 100'
10' 20' 30' — 1" = 10'
50' 100' — 1" = 50'
50' 100' — 1" = 40'
50' 100' — 1" = 30'
50' 100' — 1" = 20'

FULL SIZE PLANS HAVE BEEN PREPARED USING STANDARD ENGINEERING SCALES. REDUCED SIZED PLANS WILL NOT CONFORM TO STANDARD SCALES. IN MAKING MEASUREMENTS ON REDUCED PLANS, THE ABOVE SCALES MAY BE USED.

J.U.L.I.E.
JOINT UTILITY LOCATION INFORMATION FOR EXCAVATORS
1–800–892–0123
OR 811

PROJECT MANAGER – PRAVEEN KAINI, PE (847) 705–4237

CONTRACT NO. 60R76

AEG ATLAS ENGINEERING GROUP, LTD.

BAXTER & WOODMAN

HDR

HOH GROUP

GSG CONSULTANTS, INC.

STATE OF ILLINOIS
DEPARTMENT OF TRANSPORTATION

SUBMITTED March 17th 2025
REGIONAL ENGINEER

May 9 2025
ENGINEER OF DESIGN AND ENVIRONMENT

May 9 2025
DIRECTOR OF HIGHWAYS PROJECT IMPLEMENTATION

PRINTED BY THE AUTHORITY OF THE STATE OF ILLINOIS

REV-SEP

INDEX OF SHEETS

SHEET	DESCRIPTION
1	COVER SHEET
2	INDEX OF SHEETS/HIGHWAY STANDARDS
3	GENERAL NOTES
4-13	SUMMARY OF QUANTITIES
14-17	SCHEDULE OF QUANTITIES
18	EXISTING TYPICAL SECTIONS
19-20	PROPOSED TYPICAL SECTIONS
21	ALIGNMENT, TIES AND BENCHMARKS
22	RIGHT-OF-WAY PLAN
27	REMOVAL PLAN
28	ROADWAY PLAN AND PROFILE
29	ROADWAY PLAN I-57
30-31	EROSION CONTROL PLANS
32-33	DRAINAGE PLANS
34-40	SUE PLANS
41-43	PAVEMENT MARKING AND SIGNING PLANS
44-45	PAVEMENT MARKING AND SIGNING SCHEDULES
46	LANDSCAPING PLAN
47	GRADING PLAN I-57
48	DETOUR ROUTE
49-76	STRUCTURAL PLANS SN 099-0204
77-92	STRUCTURAL PLANS SN 099-W1000
93- 98	STRUCTURAL PLANS PAULING ROAD CULVERT
99-100	STRUCTURAL PLANS SN 099-0540
101-124	CROSS SECTIONS
125-133	DISTRICT ONE DETAILS

LIST OF DISTRICT 1 STANDARD DRAWINGS

STANDARD NO.	DESCRIPTION
BD-22	PAVEMENT PATCHING FOR HMA SURFACED PAVEMENT
BD-32	BUTT JOINT & HMA TAPER DETAILS
BD-51	BENCHING DETAIL FOR EMBANKMENT WIDENING
TC-09	TRAFFIC CONTROL DETAILS FOR FREEWAY SINGLE & MULTI-LANE WEAVE
TC-10	TRAFFIC CONTROL AND PROTECTION FOR SIDE ROADS, INTERSECTIONS AND DRIVEWAYS
TC-13	D1 TYPICAL PAVEMENT MARKINGS
TC-17	TRAFFIC CONTROL DETAILS FOR FREEWAY SHOULDER CLOSURES AND PARTIAL RAMP CLOSURES
TC-21	DETOUR SIGNING FOR CLOSING STATE HIGHWAYS
TC-22	ARTERIAL ROAD INFORMATION SIGN

LIST OF IDOT HIGHWAY STANDARDS

STANDARD NO.	DESCRIPTION
000001-08	STANDARD SYMBOLS, ABBREVIATIONS AND PATTERNS
001001-02	AREAS OF REINFORCEMENT BARS
001006	DECIMAL OF AN INCH AND OF A FOOT
280001-07	TEMPORARY EROSION CONTROL SYSTEMS
420001-10	PAVEMENT JOINTS
420401-13	PAVEMENT CONNECTOR (PCC) FOR BRIDGE APPROACH SLAB
442201-03	CLASS C AND D PATCHES
482011-03	HMA SHLD. STRIPS/SHLDS. WITH RESURFACING OR WIDENING AND RESURFACING PROJECTS
515001-04	NAME PLATES FOR BRIDGES
542001-06	CONCRETE END SECTIONS FOR PIPE CULVERTS 15" THRU 84" DIA.
542311-07	TRAVERSABLE PIPE GRATE FOR CONCRETE END SECTIONS
601001-05	PIPE UNDERDRAINS
601101-02	CONCRETE HEADWALLS FOR PIPE UNDERDRAINS
602402-03	PRECAST MANHOLE TYPE A 5' DIAMETER
602601-06	PRECAST REINFORCED CONCRETE FLAT SLAB TOP
602701-02	MANHOLE STEPS
604001-05	FRAME AND LIDS TYPE 1
606201-04	TYPE B GUTTER (INLET, OUTLET & ENTRANCE)
630001-13	STEEL PLATE BEAM GUARDRAIL
631006-08	TRAFFIC BARRIER TERMINAL, TYPE 1B
631011-10	TRAFFIC BARRIER TERMINAL, TYPE 2
631031-18	TRAFFIC BARRIER TERMINAL, TYPE 6
631033-09	TRAFFIC BARRIER TERMINAL, TYPE 6B
664001-02	CHAIN LINK FENCE

LIST OF IDOT HIGHWAY STANDARDS (CONTINUED)

STANDARD NO.	DESCRIPTION
701001-02	OFF-RD OPERATIONS, 2L, 2W, MORE THAN 15' AWAY
701006-05	OFF-RD OPERATIONS, 2L, 2W, 15' TO 24" FROM PAVEMENT EDGE
701101-05	OFF-RD OPERATIONS, MULTILANE, 15' TO 24" FROM PAVEMENT EDGE
701106-02	OFF-RD OPERATIONS, MULTILANE, MORE THAN 15' AWAY
701201-05	LANE CLOSURE, 2L 2W, DAY ONLY, FOR SPEEDS ≥ 45 MPH
701301-04	LANE CLOSURE, 2L, 2W, SHORT TIME OPERATIONS
701311-03	LANE CLOSURE 2L, 2W, MOVING OPERATIONS - DAY ONLY
701400-12	APPROACH TO LANE CLOSURE, FREEWAY / EXPRESSWAY
701401-13	LANE CLOSURE, FREEWAY/EXPRESSWAY
701411-09	LANE CLOSURE, MULTILANE, AT ENTRANCE OR EXIT RAMP, FOR SPEEDS ≥ 45 MPH
701427-05	LANE CLOSURE, MULTILANE, INTERMITTENT OR MOVING OPER., FOR SPEEDS ≤ 40 MPH
701428-01	TRAFFIC CONTROL SETUP AND REMOVAL FREEWAY / EXPRESSWAY
701501-06	URBAN LANE CLOSURE 2L, 2W, UNDIVIDED
701901-10	TRAFFIC CONTROL DEVICES
704001-08	TEMPORARY CONCRETE BARRIER
720001-01	SIGN PANEL MOUNTING DETAILS
720006-04	SIGN PANEL ERECTION DETAILS
720011-01	METAL POSTS FOR SIGNS, MARKERS & DELINEATORS
728001-01	TELESCOPING STEEL SIGN SUPPORT
729001-01	APPLICATIONS OF TYPES A & B METAL POSTS
731001-01	BASE FOR TELESCOPING STEEL SIGN SUPPORT
780001-05	TYPICAL PAVEMENT MARKINGS

GENERAL NOTES

1. THE CONTRACTOR SHALL CONTACT J.U.L.I.E. AT LEAST 48 HOURS PRIOR TO EXCAVATION TO DETERMINE WHICH UTILITIES ARE IN THE AREA.

2. THE CONTRACTOR SHALL BE RESPONSIBLE FOR COLLECTING AND MAINTAINING AN ELECTRONIC LOG OF ALL STAKEOUT SURVEY THAT IS PERFORMED ON THE JOB, EITHER BY HIM/HER OR ANY SUB-CONTRACTOR PERFORMING THE STAKEOUT. UPON REQUEST, ALL LOGS SHALL BE SUBMITTED TO THE DEPARTMENT. NO ADDITIONAL COMPENSATION WILL BE ALLOWED FOR THIS WORK, BUT SHALL BE CONSIDERED INCIDENTAL TO THE CONTRACT.

3. NO CONSTRUCTION SHALL BEGIN UNTIL ALL PROPER TEMPORARY SIGNS AND BARRICADES HAVE BEEN INSTALLED.

4. THE CONTRACTOR SHALL COORDINATE CONSTRUCTION ACTIVITIES WITH UTILITY COMPANIES AND THE MONEE TOWNSHIP TO HAVE THE LOCATION OF EXISTING UTILITIES STAKED AT LEAST FORTY-EIGHT (48) HOURS PRIOR TO EXCAVATION.

5. THE CONTRACTOR SHALL BE RESPONSIBLE FOR THE PROTECTION OF ALL UNDERGROUND OR SURFACE UTILITIES EVEN THOUGH THEY MAY NOT BE SHOWN ON PLANS. ANY UTILITY THAT IS DAMAGED DURING CONSTRUCTION SHALL BE REPLACED TO THE SATISFACTION OF THE ENGINEER AT THE CONTRACTOR'S OWN EXPENSE.

6. IT SHALL BE THE CONTRACTORS RESPONSIBILITY TO VERIFY ALL DIMENSIONS AND CONDITIONS EXISITNG IN THE FIELD PRIOR TO CONSTRUCTION AND ORDERING OF MATERIALS.

7. TREES THREE INCHES OR GREATER IN DIAMETER AT BREAST HEIGHT WILL NOT BE CLEARED APRIL 1ST THROUGH OCTOBER 31ST.

8. SEEDING WILL NOT BE PERMITTED AT ANY TIME WHEN THE GROUND IS FROZEN, WET, OR IN AN UNTILLABLE CONDITION, LOCATIONS TO BE SEEDED WILL BE DETERMINED BY THE ENGINEER.

9. ALL EXCESS MATERIAL SHALL BE LEGALLY DISPOSED OF OUTSIDE THE LIMITS OF THE RIGHT-OF-WAY. IT SHALL BE THE CONTRACTOR'S RESPONSIBILITY TO SELECT DUMP SITES AND OBTAIN PERMISSION AND ALL NECESSARY PERMITS TO USE SUCH DUMP SITES.

10. THE CONTACTOR WILL NOT BE ABLE TO SET UP A YARD OR FIELD OFFICE ON STATE PROPERTY WITHOUT WRITTEN PERMISSION FROM THE DEPARTMENT.

11. THE CONTRACTOR SHALL USE CARE NEAR ANY AND ALL EXISTING ITEMS THAT WILL NOT BE REMOVED. ANY DAMAGE DONE TO EXISTING ITEMS BY THE CONTRACTOR SHALL BE REPAIRED OR REPLACED TO THE SATISFACTION OF THE ENGINEER AT THE CONTRACTOR'S OWN EXPENSE.

12. DO NOT SCALE PLANS FOR CONSTRUCTION DIMENSIONS.

13. DURING CONSTRUCTION OPERATIONS, IF ANY LOOSE MATERIAL IS DEPOSITED IN THE FLOW LINE OF DRAINAGE STRUCTURES SUCH THAT THE NATURAL FLOW OF WATER IS OBSTRUCTED, THE MATERIAL SHALL BE REMOVED AT THE CLOSE OF EACH WORKDAY. AT THE CONCLUSION OF CONSTRUCTION OPERATIONS, ALL UTILITY STRUCTURES SHALL BE FREE FROM DUST AND DEBRIS. THE WORK SPECIFIED ABOVE WILL NOT BE PAID SEPARATELY BUT SHALL BE INCLUDED IN THE COST OF CONTRACT.

14. THE STRIPPED TOPSOIL SHALL BE STOCKPILED, SORTED, AND REUSED FOR THE PROPOSED LANDSCAPING IMPROVEMENTS, THE ACTUAL REMOVAL DEPTH AND QUANTITY OF TOPSOIL REMOVAL SHALL BE VERIFIED IN THE FIELD.

15. WHERE NEW WORK MEETS EXISTING FEATURES TO REMAIN, FIELD CHECK ALL DIMENSIONS AND ELEVATIONS BEFORE PROCEEDING WITH CONSTRUCTION. NOTIFY THE ENGINEER IMMEDIATELY OF ANY DISCREPANCIES.

16. THE CONTRACTOR IS RESPONSIBLE FOR RETURNING ALL AREAS AFFECTED BY EQUIPMENT AND LABORERS TO EXISTING CONDITIONS. THE CONTRACTOR IS ALSO RESPONSIBLE FOR PROTECTING ALL NEW WORK UNTIL COMPLETION OF THIS CONTRACT.

GENERAL NOTES CONTINUED

17. THE CONTRACTOR SHALL TAKE EXTRA CARE IN GRADING AND EXCAVATING NEAR TREES WHICH ARE NOT MARKED FOR REMOVAL SO AS TO NOT CAUSE INJURY TO THE ROOT SYSTEM OR TRUNKS. ANY DAMAGE DONE TO EXISTING ITEMS BY THE CONTRACTOR SHALL BE REPAIRED BY THE CONTRACTOR.

18. CONTACT THE IDOT ROADSIDE DEVELOPMENT UNIT AT 847-705-4171 AT LEAST 2 WEEKS PRIOR TO BEGINNING LANDSCAPE AND FORESTRY WORK.

19. THE RESIDENT ENGINEER WILL CONTACT THE FOREST PRESERVE DISTRICT OF WILL COUNTY (MS. CORRINE CRAWFORD, PLANNING AND GIS COORDINATOR, 812-722-9128 OR CCRAWFORD@FPDWC.ORG) PRIOR TO START OF CONSTRUCTION TO INFORM THEM OF THE INITIATION OF CONSTRUCTION ACTIVITIES NEAR THEIR PROPERTIES.

20. THE CONTRACTOR SHALL CONTACT THE ARTERIAL TRAFFIC CONTROL SUPERVISOR AT KALPANA.KANNAN-HOSADURGA@ILLINOIS.GOV A MINIMUM OF 72 HOURS IN ADVANCE OF BEGINNING WORK.

21. CHANGEABLE MESSAGE SIGNS SHALL BE INSTALLED TWO WEEKS PRIOR TO ALL TRAFFIC STAGE CHANGES ON EACH APPROACH OF THE AFFECTED ROADWAY TO WARN MOTORISTS OF THE UPCOMING EVENT. THE SIGNS SHALL BE REMOVED TWO WEEKS THEREAFTER UNLESS THE SIGNS ARE NEEDED AGAIN FOR A SUBSEQUENT FUTURE EVENT THAT WILL OCCUR WITHIN TWO WEEKS ON THE SAME APPROACH OF THE AFFECTED ROADWAY. THE SIGN LOCATIONS SHALL BE DETERMINED BY THE ENGINEER.

22. THE SUBGRADE STABILITY SHALL BE VERIFIED BY PROOF ROLLING WITH A FULLY LOADED TANDEM-AXLE TRUCK.

23. GEOTECHNICAL FABRIC FOR GROUND STABILIZATION AND/OR AGGREGATE SUBGRADE IMPROVEMENT (CU YD) HAVE BEEN PROVIDED FOR USE AT THE LOCATIONS INDICATED FOR SOILS THAT TEND TO BE UNSTABLE AND/OR UNSUITABLE. THE ACTUAL NEED FOR REMOVAL AND REPLACEMENT WITH ABOVE ITEM WILL BE DETERMINED IN THE FIELD AT THE TIME OF CONSTRUCTION BY THE GEOTECHNICAL ENGINEER. ALL POTENTIALLY UNSTABLE SOILS SHOULD BE TESTED WITH A STATIC OR DYNAMIC CONE PENETROMETER AND TREATED IN ACCORDANCE WITH ARTICLE 301.04 OF THE SSRBC AND IDOT SUBGRADE STABILITY MANUAL. IF UNSTABLE AND/OR UNSUITABLE SOILS ARE NOT ENCOUNTERED, THEN THE QUANTITY SHALL BE DEDUCTED AND NO ADDITIONAL COMPENSATION WILL BE DUE TO THE CONTRACTOR.

24. ANY AGGREGATE SUBGRADE IMPROVEMENT CONTAMINATED AND/OR DAMAGED BY THE CONTRACTOR'S VEHICLES AND/OR EQUIPMENTS IS TO BE REMOVED AND REPLACED AS DIRECT BY THE ENGINEER AT CONTRACTOR EXPENSE.

25. THE AGGREGATE GRADATION FOR THE AGGREGATE SUBGRADE IMPROVEMENT 12" LOWER LIFT SHALL BE CS 1 OR RR 1.

26. BEFORE BEGINNING ANY WORK, THE CONTRACTOR SHALL RETAIN AND RECORD, FOR FUTURE REFERENCE, ALL EXISTING PAVEMENT MARKING LINES (AND RAISED REFLECTIVE PAVEMENT MARKERS) IN ORDER THAT THESE LOCATIONS BE RE-ESTABLISHED FOR STRIPING. EXACT LOCATIONS OF ALL PAVEMENT MARKINGS SHALL BE AS DIRECTED BY THE ENGINEER.

27. THE CONTRACTOR SHALL REQUEST AND GAIN APPROVAL FROM THE ILLINOIS DEPARTMENT OF TRANSPORTATION'S EXPRESSWAY TRAFFIC OPERATIONS ENGINEER AT WWW.IDOTLCS.COM TWENTY-FOUR (24) HOURS IN ADVANCE OF ALL DAILY LANE, RAMP AND SHOULDER CLOSURES AND 7 DAYS IN ADVANCE OF ALL PERMANENT AND WEEKEND CLOSURES ON ALL FREEWAYS AND/OR EXPRESSWAYS IN DISTRICT ONE. THIS ADVANCE NOTIFICATION IS CALCULATED BASED ON WORKWEEK OF MONDAY THROUGH FRIDAY AND SHALL NOT INCLUDE WEEKENDS OR HOLIDAYS.

28. THE CONTRACTOR SHALL CONTACT THE IDOT EXPRESSWAY TRAFFIC CONTROL SUPERVISOR DISTRICT ONE CARLOS AT CARLOS.MUNOZ@ILLINOIS.GOV A MINIMUM OF 72 HOURS IN ADVANCE OF BEGGING OF WORK.

29. THE ENGINEER SHALL CONTACT MASHAMA GREEN, AREA TRAFFIC SIGNAL ENGINEER, AT MASHAMA.GREEN@ILLINOIS.GOV A MINIMUM OF 72 HOURS IN ADVANCE OF BEGINNING WORK.

30. THIS PROJECT REQUIRES AN US ARMY CORPS OF ENGINEERS (USACE) 404 PERMIT THAT WILL BE SECURED BY THE DEPARTMENT.AS A CONDITION OF THIS PERMIT, THE CONTRACTOR WILL NEED TO SUBMIT AN IN-STREAM WORK PLAN TO THE DEPARTMENT FOR APPROVAL. GUIDELINES ON ACCEPTABLE IN-STREAM WORK TECHNIQUES CAN BE FOUND ON THE USACE WEBSITE. THE USACE DEFINES AND DETERMINES IN-STREAM WORK. THE COST OF ALL MATERIALS AND LABOR NECESSARY TO COMPLY WITH THE ABOVE PROVISIONS TO PREPARE AND IMPLEMENT AN IN-STREAM WORK PLAN WILL NOT BE PAID FOR SEPARATELY, BUT SHALL BE CONSIDERED AS INCLUDED IN THE UNIT BID PRICES OF THE CONTRACT AND NO ADDITIONAL COMPENSATION WILL BE ALLOWED.

31. THE DEPARTMENT HAS NOT OBTAINED ANY PERMITS FOR OFFSITE BORROW, WASTE, USE (BWU) AREAS. PRIOR TO WORKING IN BWU AREAS, IF THE CONTRACTOR CHOOSES TO USE ACTIVITIES REQUIRING PERMITS IT IS THE CONTRACTOR'S RESPONSIBILITY TO SECURE THE PROPER PERMITS. IN ADDITION TO THE BORROW REVIEW (BDE 2289) and USE/WASTE REVIEW (BDE 2290) SUBMITTALS, THE CONTRACTOR SHALL SUBMIT AN EROSION AND SEDIMENT CONTROL (ESC) PLAN FOR EVERY BWU SITE TO THE DEPARTMENT FOR ACCEPTANCE. GUIDELINES FOR ACCEPTABLE BWU PRACTICES CAN BE FOUND IN SECTION II.G.1 AND 2 OF THE SWPPP. THE COST OF ALL MATERIALS AND LABOR NECESSARY TO COMPLY WITH THE ABOVE PROVISIONS TO PREPARE AND IMPLEMENT ESC PLANS WILL NOT BE PAID FOR SEPARATELY, BUT SHALL BE CONSIDERED AS INCLUDED IN THE UNIT BID PRICES OF THE CONTRACT AND NO ADDITIONAL COMPENSATION WILL BE ALLOWED.

COMMITMENTS

1. TO CONSERVE THE NORTHERN LONG EARED BAT (NLEB) AND TRICOLORED BAT (TCB), NO TREE REMOVAL SHALL OCCUR BETWEEN APRIL 1 AND OCTOBER 31 OF ANY GIVEN YEAR.

	CODE NO.	ITEM	UNIT	TOTAL QUANTITY	CONSTRUCTION CODE			
					100% STATE BRIDGE 0013 099-0204	100% STATE RETAINING WALL 0044 099-W1000	100% STATE BOX CULVERT 0004 PAULING ROAD CULVERT	100% STATE BOX CULVERT 0004 099-0540
**	20100110	TREE REMOVAL (6 TO 15 UNITS DIAMETER)	UNIT	417	417			
**	20100210	TREE REMOVAL (OVER 15 UNITS DIAMETER)	UNIT	90	90			
**	20101100	TREE TRUNK PROTECTION	EACH	6	6			
**	20101200	TREE ROOT PRUNING	EACH	2	2			
**	20101400	NITROGEN FERTILIZER NUTRIENT	POUND	188	188			
**	20101500	PHOSPHORUS FERTILIZER NUTRIENT	POUND	188	188			
**	20101600	POTASSIUM FERTILIZER NUTRIENT	POUND	188	188			
	20101700	SUPPLEMENTAL WATERING	UNIT	5	5			
	20200100	EARTH EXCAVATION	CU YD	1,374	1,374			
	20201200	REMOVAL AND DISPOSAL OF UNSUITABLE MATERIAL	CU YD	1,425	1,425			
	20400800	FURNISHED EXCAVATION	CU YD	7,257	7,257			
	20800150	TRENCH BACKFILL	CU YD	71	71			
	20900110	POROUS GRANULAR BACKFILL	CU YD	139		139		
	21001000	GEOTECHNICAL FABRIC FOR GROUND STABILIZATION	SQ YD	212	212			

* = SPECIAL PROVISION
** = SPECIALTY ITEM
*** = SPECIAL PROVISION & SPECIALTY ITEM

	CODE NO.	ITEM	UNIT	TOTAL QUANTITY	CONSTRUCTION CODE 100% STATE BRIDGE 0013 099-0204	100% STATE RETAINING WALL 0044 099-W1000	100% STATE BOX CULVERT 0004 PAULING ROAD CULVERT	100% STATE BOX CULVERT 0004 099-0540
	21101615	TOPSOIL FURNISH AND PLACE, 4"	SQ YD	10,088	10,088			
**	25000310	SEEDING, CLASS 4	ACRE	2	2			
**	25000314	SEEDING, CLASS 4B	ACRE	0.25	0.25			
**	25100630	EROSION CONTROL BLANKET	SQ YD	8,530	8,530			
	28000250	TEMPORARY EROSION CONTROL SEEDING	POUND	211	211			
	28000305	TEMPORARY DITCH CHECKS	FOOT	232	232			
**	28000400	PERIMETER EROSION BARRIER	FOOT	1,903	1,903			
	28100107	STONE RIPRAP, CLASS A4	SQ YD	4.4	4.4			
*	30300001	AGGREGATE SUBGRADE IMPROVEMENT	CU YD	49	49			
*	30300112	AGGREGATE SUBGRADE IMPROVEMENT 12"	SQ YD	1,860	1,860			
	40600275	BITUMINOUS MATERIALS (PRIME COAT)	POUND	4,232	4,232			
	40600290	BITUMINOUS MATERIALS (TACK COAT)	POUND	1,347	1,347			
	40600370	LONGITUDINAL JOINT SEALANT	FOOT	1,193	1,193			
	40600400	MIXTURE FOR CRACKS, JOINTS, AND FLANGEWAYS	TON	9	9			

* = SPECIAL PROVISION
** = SPECIALTY ITEM
*** = SPECIAL PROVISION & SPECIALTY ITEM

CODE NO.	ITEM	UNIT	TOTAL QUANTITY	CONSTRUCTION CODE 100% STATE BRIDGE 0013 099-0204	100% STATE RETAINING WALL 0044 099-W1000	100% STATE BOX CULVERT 0004 PAULING ROAD CULVERT	100% STATE BOX CULVERT 0004 099-0540
40600982	HOT-MIX ASPHALT SURFACE REMOVAL - BUTT JOINT	SQ YD	45	45			
40603200	POLYMERIZED HOT-MIX ASPHALT BINDER COURSE, IL-4.75, N50	TON	72	72			
40604062	HOT-MIX ASPHALT SURFACE COURSE, IL-9.5, MIX "D", N70	TON	144	144			
40701846	HOT-MIX ASPHALT PAVEMENT (FULL-DEPTH), 8 ¼"	SQ YD	849	849			
42000060	WELDED WIRE REINFORCEMENT	SQ YD	117	117			
42000080	PAVEMENT CONNECTOR (PCC) FOR BRIDGE APPROACH SLAB	SQ YD	161	161			
44000100	PAVEMENT REMOVAL	SQ YD	483	483			
44000158	HOT-MIX ASPHALT SURFACE REMOVAL, 2 ¼"	SQ YD	2,518	2,518			
44201729	CLASS D PATCHES, TYPE II, 7 INCH	SQ YD	171	171			
44201733	CLASS D PATCHES, TYPE III, 7 INCH	SQ YD	190	190			
48101620	AGGREGATE SHOULDERS, TYPE B 10"	SQ YD	110	110			
48203030	HOT-MIX ASPHALT SHOULDERS, 8 ¼"	SQ YD	871	871			
50102400	CONCRETE REMOVAL	CU YD	17.7	15.2		2.5	
50104400	CONCRETE HEADWALL REMOVAL	EACH	2	2			

* = SPECIAL PROVISION
** = SPECIALTY ITEM
*** = SPECIAL PROVISION & SPECIALTY ITEM

CODE NO.	ITEM	UNIT	TOTAL QUANTITY	CONSTRUCTION CODE 100% STATE BRIDGE 0013 099-0204	100% STATE RETAINING WALL 0044 099-W1000	100% STATE BOX CULVERT 0004 PAULING ROAD CULVERT	100% STATE BOX CULVERT 0004 099-0540
50104650	SLOPE WALL REMOVAL	SQ YD	364	364			
50104701	REMOVAL OF EXISTING CONCRETE DECK NO. 1	EACH	1	1			
50105220	PIPE CULVERT REMOVAL	FOOT	62	62			
50157300	PROTECTIVE SHIELD	SQ YD	516	516			
50200100	STRUCTURE EXCAVATION	CU YD	277	112	165		
50200450	REMOVAL AND DISPOSAL OF UNSUITABLE MATERIAL FOR STRUCTURES	CU YD	23			23	
50300225	CONCRETE STRUCTURES	CU YD	127.8	25.0	102.8		
50300255	CONCRETE SUPERSTRUCTURE	CU YD	343.5	343.5			
50300260	BRIDGE DECK GROOVING	SQ YD	955	955			
50300300	PROTECTIVE COAT	SQ YD	1,562	1,289	273		
50301350	CONCRETE SUPERSTRUCTURE (APPROACH SLAB)	CU YD	87.2	87.2			
50500405	FURNISHING AND ERECTING STRUCTURAL STEEL	POUND	3,200	2,400	800		
50500505	STUD SHEAR CONNECTORS	EACH	3,687	3,090	597		
50800205	REINFORCEMENT BARS, EPOXY COATED	POUND	138,970	119,550	14,350	5,070	

* = SPECIAL PROVISION
** = SPECIALTY ITEM
*** = SPECIAL PROVISION & SPECIALTY ITEM

	CODE NO.	ITEM	UNIT	TOTAL QUANTITY	CONSTRUCTION CODE 100% STATE BRIDGE 0013 099-0204	100% STATE RETAINING WALL 0044 099-W1000	100% STATE BOX CULVERT 0004 PAULING ROAD CULVERT	100% STATE BOX CULVERT 0004 099-0540
**	50901739	BRIDGE FENCE RAILING, CURVED	FOOT	561	561			
	51100100	SLOPE WALL 4 INCH	SQ YD	384	384			
**	51500100	NAME PLATES	EACH	3	1	1	1	
	52100010	ELASTOMERIC BEARING ASSEMBLY, TYPE I	EACH	10	10			
	52100510	ANCHOR BOLTS, ¾"	EACH	20	20			
**	52200020	TEMPORARY SOIL RETENTION SYSTEM	SQ FT	375			375	
**	52200105	FURNISHING SOLDIER PILES (W SECTION)	FOOT	1,441		1,441		
**	52200200	DRILLING AND SETTING SOLDIER PILES (IN SOIL)	CU FT	6,794		6,794		
**	52200250	UNTREATED TIMBER LAGGING	SQ FT	2,120		2,120		
	54002020	EXPANSION BOLTS ¾ INCH	EACH	16			16	
	54003000	CONCRETE BOX CULVERTS	CU YD	27.6			27.6	
	542A0229	PIPE CULVERTS, CLASS A, TYPE 1 24"	FOOT	20	20			
	542A1075	PIPE CULVERTS, CLASS A, TYPE 2 30"	FOOT	73	73			
	54260315	TRAVERSABLE PIPE GRATE FOR CONCRETE END SECTION	FOOT	2	2			

* = SPECIAL PROVISION
** = SPECIALTY ITEM
*** = SPECIAL PROVISION & SPECIALTY ITEM

	CODE NO.	ITEM	UNIT	TOTAL QUANTITY	CONSTRUCTION CODE 100% STATE BRIDGE 0013 099-0204	100% STATE RETAINING WALL 0044 099-W1000	100% STATE BOX CULVERT 0004 PAULING ROAD CULVERT	100% STATE BOX CULVERT 0004 099-0540
	54261324	CONCRETE END SECTION, STANDARD 542001, 24", 1:3	EACH	1	1			
	54261330	CONCRETE END SECTION, STANDARD 542001, 30", 1:3	EACH	2	2			
	58600101	GRANULAR BACKFILL FOR STRUCTURES	CU YD	101	101			
	59000200	EPOXY CRACK INJECTION	FOOT	121	115			6
	59100100	GEOCOMPOSITE WALL DRAIN	SQ YD	266	50	185	31	
	60100060	CONCRETE HEADWALLS FOR PIPE DRAINS	EACH	5	4	1		
	60146304	PIPE UNDERDRAINS FOR STRUCTURES 4"	FOOT	502	115	387		
	60221100	MANHOLES, TYPE A, 5'-DIAMETER, TYPE 1 FRAME, CLOSED LID	EACH	1	1			
	60600095	CLASS SI CONCRETE (OUTLET)	CU YD	0.5	0.5			
	60602800	CONCRETE GUTTER, TYPE B	FOOT	351		351		
	60920024	PIPE CULVERTS TO BE CLEANED 24"	FOOT	202	202			
**	63000001	STEEL PLATE BEAM GUARDRAIL, TYPE A, 6 FOOT POSTS	FOOT	1,262.5	1,262.5			
**	63100045	TRAFFIC BARRIER TERMINAL, TYPE 2	EACH	2	2			
**	63100085	TRAFFIC BARRIER TERMINAL, TYPE 6	EACH	4	4			

* = SPECIAL PROVISION
** = SPECIALTY ITEM
*** = SPECIAL PROVISION & SPECIALTY ITEM

	CODE NO.	ITEM	UNIT	TOTAL QUANTITY	CONSTRUCTION CODE 100% STATE BRIDGE 0013 099-0204	100% STATE RETAINING WALL 0044 099-W1000	100% STATE BOX CULVERT 0004 PAULING ROAD CULVERT	100% STATE BOX CULVERT 0004 099-0540
**	63100089	TRAFFIC BARRIER TERMINAL, TYPE 6B	EACH	2	2			
**	63100167	TRAFFIC BARRIER TERMINAL, TYPE 1 (SPECIAL) TANGENT	EACH	4	4			
	63200310	GUARDRAIL REMOVAL	FOOT	1,855	1,855			
	66500105	WOVEN WIRE FENCE, 4'	FOOT	756	756			
***	66900200	NON-SPECIAL WASTE DISPOSAL	CU YD	1,180	1,180			
***	66900530	SOIL DISPOSAL ANALYSIS	EACH	2	2			
***	66901001	REGULATED SUBSTANCES PRE-CONSTRUCTION PLAN	L SUM	1	1			
***	66901003	REGULATED SUBSTANCES FINAL CONSTRUCTION REPORT	L SUM	1	1			
***	66901006	REGULATED SUBSTANCES MONITORING	CAL DA	15	15			
	67100100	MOBILIZATION	L SUM	1	1			
	70107025	CHANGEABLE MESSAGE SIGN	CAL DA	240	240			
**	72000100	SIGN PANEL - TYPE 1	SQ FT	35	35			
**	72400500	RELOCATE SIGN PANEL ASSEMBLY - TYPE A	EACH	2	2			
**	72400600	RELOCATE SIGN PANEL ASSEMBLY - TYPE B	EACH	1	1			

* = SPECIAL PROVISION
** = SPECIALTY ITEM
*** = SPECIAL PROVISION & SPECIALTY ITEM

	CODE NO.	ITEM	UNIT	TOTAL QUANTITY	CONSTRUCTION CODE 100% STATE BRIDGE 0013 099-0204	100% STATE RETAINING WALL 0044 099-W1000	100% STATE BOX CULVERT 0004 PAULING ROAD CULVERT	100% STATE BOX CULVERT 0004 099-0540
**	72400710	RELOCATE SIGN PANEL - TYPE 1	SQ FT	72	72			
**	72501000	TERMINAL MARKER - DIRECT APPLIED	EACH	6	6			
**	72800100	TELESCOPING STEEL SIGN SUPPORT	FOOT	32	32			
**	73500300	REMOVE AND RELOCATE GROUND MOUNTED SIGN SUPPORT	EACH	9	9			
**	73700100	REMOVE GROUND MOUNTED SIGN SUPPORT	EACH	2	2			
**	78000200	THERMOPLASTIC PAVEMENT MARKING - LINE 4"	FOOT	3,337	3,337			
**	78000650	THERMOPLASTIC PAVEMENT MARKING - LINE 24"	FOOT	28	28			
**	78009004	MODIFIED URETHANE PAVEMENT MARKING - LINE 4"	FOOT	1,456	1,456			
**	78200005	GUARDRAIL REFLECTORS, TYPE A	EACH	28	28			
**	85000200	MAINTENANCE OF EXISTING TRAFFIC SIGNAL INSTALLATION	EACH	3	3			
**	A2005020	TREE, GYMNOCLADUS DIOICUS (KENTUCKY COFFEETREE), 2-1/2" CALIPER, BALLED AND BURLAPPED	EACH	2	2			
**	A2005516	TREE, NYSSA SYLVATICA (BLACK TUPELO), 2" CALIPER, BALLED AND BURLAPPED	EACH	6	3		3	
**	A2006516	TREE, QUERCUS BICOLOR (SWAMP WHITE OAK), 2" CALIPER, BALLED AND BURLAPPED	EACH	8	8			
**	K0029614	WEED CONTROL, AQUATIC	GALLON	1	0.25	0.25	0.25	0.25

* = SPECIAL PROVISION
** = SPECIALTY ITEM
*** = SPECIAL PROVISION & SPECIALTY ITEM

	CODE NO.	ITEM	UNIT	TOTAL QUANTITY	CONSTRUCTION CODE			
					100% STATE	100% STATE	100% STATE	100% STATE
					BRIDGE	RETAINING WALL	BOX CULVERT	BOX CULVERT
					0013	0044	0004	0004
					099-0204	099-W1000	PAULING ROAD CULVERT	099-0540
*	K0029618	WEED CONTROL, BROADLEAF IN TURF	GALLON	1	0.25	0.25	0.25	0.25
*	K0029634	WEED CONTROL, PRE-EMERGENT GRANULAR HERBICIDE	POUND	2	2			
***	X2010516	SELECTIVE CLEARING	UNIT	9	9			
*	X2503110	MOWING (SPECIAL)	ACRE	7.5	7.5			
*	X5021512	COFFERDAM (TYPE 1) (IN-STREAM/WETLAND WORK)	EACH	1	1			
*	X5080530	BAR TERMINATORS	EACH	218	218			
*	X5427602	REMOVE EXISTING FLARED END SECTION	EACH	1	1			
*	X5810103	MEMBRANE WATERPROOFING SYSTEM FOR BURIED STRUCTURES	SQ YD	31			31	
*	X6640104	FENCE REMOVAL	FOOT	514	514			
*	X6700407	ENGINEER'S FIELD OFFICE, TYPE A (D1)	CAL MO	24	24			
*	X7010216	TRAFFIC CONTROL AND PROTECTION, (SPECIAL)	L SUM	1	1			
*	X7011015	TRAFFIC CONTROL AND PROTECTION (EXPRESSWAYS)	L SUM	1	1			
*	Z0001899	JACK AND REMOVE EXISTING BEARINGS	EACH	10	10			
*	Z0007101	CONTAINMENT AND DISPOSAL OF LEAD PAINT CLEANING RESIDUES NO. 1	L SUM	1	1			

* = SPECIAL PROVISION
** = SPECIALTY ITEM
*** = SPECIAL PROVISION & SPECIALTY ITEM

	CODE NO.	ITEM	UNIT	TOTAL QUANTITY	CONSTRUCTION CODE 100% STATE BRIDGE 0013 099-0204	100% STATE RETAINING WALL 0044 099-W1000	100% STATE BOX CULVERT 0004 PAULING ROAD CULVERT	100% STATE BOX CULVERT 0004 099-0540
*	Z0010501	CLEANING AND PAINTING STEEL BRIDGE NO. 1	L SUM	1	1			
*	Z0012754	STRUCTURAL REPAIR OF CONCRETE (DEPTH EQUAL TO OR LESS THAN 5 INCHES)	SQ FT	17	17			
*	Z0012755	STRUCTURAL REPAIR OF CONCRETE (DEPTH GREATER THAN 5 INCHES)	SQ FT	10	10			
*	Z0013798	CONSTRUCTION LAYOUT	L SUM	1	1			
*	Z0015550	DEBRIS REMOVAL	CU YD	1				1
*	X7200061	TEMPORARY INFORMATION SIGNING	SQ FT	100	100			
*	Z0054400	ROCK FILL	CU YD	23			23	
*	Z0073200	TEMPORARY SHORING AND CRIBBING	EACH	2	2			
Ø	Z0076604	TRAINEES - TRAINING PROGRAM GRADUATE	HOUR	500	500			
**	Z0073510	TEMPORARY TRAFFIC SIGNAL TIMING	EACH	6	6			

* = SPECIAL PROVISION
** = SPECIALTY ITEM
*** = SPECIAL PROVISION & SPECIALTY ITEM

Ø 0042

MODEL: Default
FILE NAME: pw:\\atlas-pw.bentley.com:atlas-pw-21\Documents\Projects\10011\001 CV 008\003\10 CAD\3 Sheets\03 - General\D16R76-sh-SOQ.dgn

AEG ATLAS ENGINEERING GROUP, LTD.

USER NAME = astrashimirov	DESIGNED - CVP	REVISED -	
	DRAWN - CVP	REVISED -	
PLOT SCALE = 100.0000 ' / in.	CHECKED - BA	REVISED -	
PLOT DATE = 3/14/2025	DATE - 03/06/2024	REVISED -	

STATE OF ILLINOIS
DEPARTMENT OF TRANSPORTATION

SUMMARY OF QUANTITIES
I-57 AT PAULING RD

SCALE: N.T.S. | SHEET 10 OF 10 SHEETS | STA. TO STA.

F.A.I. RTE.	SECTION	COUNTY	TOTAL SHEETS	SHEET NO.
57	99-1HB-2-BR	WILL	133	13
		CONTRACT NO. 60R76		
	ILLINOIS	FED. AID PROJECT		

REV-SEP

CODE NO.	ITEM		UNIT
20100110	TREE REMOVAL (6 TO 15 UNITS DIAMETER)		UNIT
STA	OFFSET	LT/RT	QUANTITY (UNIT)
PAULING ROAD			
104+69	39	LT	8
104+69	39	LT	8
104+91	46	LT	8
105+11	34	RT	12
105+44	44	RT	6
105+74	50	RT	10
107+07	65	LT	10
107+10	86	LT	8
107+11	66	LT	10
107+25	80	LT	8
107+26	72	LT	10
108+01	68	LT	10
108+37	68	LT	160
108+38	103	LT	12
108+43	86	LT	6
108+61	85	LT	6
108+61	99	LT	12
108+66	68	LT	9
108+68	68	LT	9
108+75	85	LT	6
108+79	74	LT	10
108+82	74	LT	10
108+82	101	LT	9
108+91	76	LT	9
108+94	86	LT	9
108+95	90	LT	9
108+98	102	LT	9
109+03	101	LT	6
112+40	35	LT	6
111+89	94	LT	6
111+89	94	LT	6
		TOTAL:	417

CODE NO.	ITEM		UNIT
20100210	TREE REMOVAL (OVER 15 UNITS DIAMETER)		UNIT
STA	OFFSET	LT/RT	QUANTITY (EACH)
104+93	37	RT	18
114+34	49	LT	18
115+38	50	LT	24
115+00	53	LT	30
		TOTAL:	90

CODE NO.	ITEM		UNIT
20101100	TREE TRUNK PROTECTION		EACH
STATION	OFFSET	LT/RT	QUANTITY
PAULING ROAD			
107+24	118	LT	1
108+98	112	LT	1
109+32	115	LT	1
109+39	114	LT	1
114+86	67	LT	1
115+18	59	LT	1
		TOTAL:	6

CODE NO.	ITEM		UNIT
20101200	TREE ROOT PRUNING		EACH
STATION	OFFSET	LT/RT	QUANTITY
PAULING ROAD			
114+87	67	LT	1
115+19	59	LT	1
		TOTAL:	2

CODE NO.	ITEM					UNIT
28000305	TEMPORARY DITCH CHECKS					FOOT
STA	OFFSET	LT/RT	SIZE (FT)	EACH		QTY (FOOT)
PAULING RD						
103+75	32	LT	8	1.0		8
104+25	35	LT	8	1.0		8
104+75	36	LT	8	1.0		8
105+25	37	LT	8	1.0		8
105+70	53	LT	8	1.0		8
106+79	60	LT	8	1.0		8
107+26	49	LT	8	1.0		8
107+76	53	LT	8	1.0		8
108+26	57	LT	8	1.0		8
108+76	59	LT	8	1.0		8
109+20	76	LT	8	1.0		8
111+53	68	LT	8	1.0		8
112+03	65	LT	8	1.0		8
112+53	63	LT	8	1.0		8
113+13	62	LT	8	1.0		8
113+63	55	LT	8	1.0		8
114+12	47	LT	8	1.0		8
114+62	40	LT	8	1.0		8
115+11	33	LT	8	1.0		8
115+61	30	LT	8	1.0		8
103+53	34	RT	8	1.0		8
104+03	38	RT	8	1.0		8
104+53	40	RT	8	1.0		8
105+03	44	RT	8	1.0		8
105+93	39	RT	8	1.0		8
106+43	41	RT	8	1.0		8
106+93	45	RT	8	1.0		8
107+43	50	RT	8	1.0		8
107+92	56	RT	8	1.0		8
					TOTAL:	232

CODE NO.	ITEM					UNIT
21101615	TOPSOIL FURNISH AND PLACE, 4"					SQ YD
STA	LT/RT	STA	LT/RT	AREA (SQ FT)		QUANTITY (SQ YD)
103+50	RT	109+14	RT	30781.31		3420
103+50	LT	106+09	LT	7202.15		800
106+40	LT	109+68	LT	19516.99		2169
110+86	LT	115+75	LT	21873.24		2430
110+67	RT	115+04	RT	3019.13		335
103+50	LT	104+21	LT	819.03		91
106+50	LT	108+00	LT	1819.96		202
110+79	RT	111+25	RT	633.23		70
111+24	LT	115+75	LT	5122.83		569
					TOTAL:	10,088

CODE NO.	ITEM						UNIT
25000310	SEEDING, CLASS 4						ACRES
STA	OFFSET	LT/RT	STA	OFFSET	LT/RT	AREA (SQ FT)	QTY (ACRES)
103+50	16	RT	109+14	16	RT	30781.31	0.707
103+50	16	LT	106+09	54	LT	7202.15	0.165
106+40	39	LT	109+68	25	LT	19516.99	0.448
110+86	16	LT	115+75	12	LT	21873.24	0.502
110+67	29	RT	115+04	75	RT	3019.13	0.069
						TOTAL:	2.00

CODE NO.	ITEM							UNIT
20101400	NITROGEN FERTILIZER NUTRIENT							POUND
STA	OFFSET	LT/RT	STA	OFFSET	LT/RT	AREA (SQ FT)	QUANTITY (ACRES)	QUANTITY (POUND)
PAULING RD								
103+50	16	RT	109+14	16	RT	30781.31	0.71	64
103+50	16	LT	106+09	54	LT	7202.15	0.17	15
106+40	39	LT	109+68	25	LT	19516.99	0.45	40
110+86	16	LT	115+75	12	LT	21873.24	0.50	45
110+67	29	RT	115+04	75	RT	3019.13	0.07	6
103+50	13	LT	104+21	16	LT	819.03	0.02	2
106+50	108	LT	108+00	114	LT	1819.96	0.04	4
110+79	29	RT	111+25	26	RT	633.23	0.01	1
111+24	80	LT	115+75	29	LT	5122.83	0.12	11
							TOTAL:	188

CODE NO.	ITEM						UNIT
25000314	SEEDING, CLASS 4B						ACRES
STA	OFFSET	LT/RT	STA	OFFSET	LT/RT	AREA (SQ FT)	QTY (ACRES)
103+50	13	LT	104+21	16	LT	819.03	0.019
106+50	108	LT	108+00	114	LT	1819.96	0.042
110+79	29	RT	111+25	26	RT	633.23	0.015
111+24	80	LT	115+75	29	LT	5122.83	0.118
						TOTAL:	0.25

CODE NO.	ITEM						UNIT
20101500	PHOSPHORUS FERTILIZER NUTRIENT						POUND
STA	OFFSET	LT/RT	STA	OFFSET	LT/RT	AREA (SQ FT)	QUANTITY (ACRES)	QUANTITY (POUND)
PAULING RD								
103+50	16	RT	109+14	16	RT	30781.31	0.71	64
103+50	16	LT	106+09	54	LT	7202.15	0.17	15
106+40	39	LT	109+68	25	LT	19516.99	0.45	40
110+86	16	LT	115+75	12	LT	21873.24	0.50	45
110+67	29	RT	115+04	75	RT	3019.13	0.07	6
103+50	13	LT	104+21	16	LT	819.03	0.02	2
106+50	108	LT	108+00	114	LT	1819.96	0.04	4
110+79	29	RT	111+25	26	RT	633.23	0.01	1
111+24	80	LT	115+75	29	LT	5122.83	0.12	11
							TOTAL:	188

CODE NO.	ITEM						UNIT
20101600	POTASSIUM FERTILIZER NUTRIENT						POUND
STA	OFFSET	LT/RT	STA	OFFSET	LT/RT	AREA (SQ FT)	QUANTITY (ACRES)	QUANTITY (POUND)
PAULING RD								
103+50	16	RT	109+14	16	RT	30781.31	0.71	64
103+50	16	LT	106+09	54	LT	7202.15	0.17	15
106+40	39	LT	109+68	25	LT	19516.99	0.45	40
110+86	16	LT	115+75	12	LT	21873.24	0.50	45
110+67	29	RT	115+04	75	RT	3019.13	0.07	6
103+50	13	LT	104+21	16	LT	819.03	0.02	2
106+50	108	LT	108+00	114	LT	1819.96	0.04	4
110+79	29	RT	111+25	26	RT	633.23	0.01	1
111+24	80	LT	115+75	29	LT	5122.83	0.12	11
							TOTAL:	188

CODE NO.	ITEM				UNIT
25100630	EROSION CONTROL BLANKET				SQ YD
STATION	STATION	OFFSET	AREA (SQ FT)	AREA (SQ YD)	QTY
PAULING ROAD					
103+50	106+24	LT	6601.1	733	733
106+52	109+62	LT	18847.6	2094	2,094
110+86	115+75	LT	23778.1	2642	2,642
103+50	109+04	RT	23844.2	2649	2,649
110+70	115+00	RT	3703.1	411	411
				TOTAL:	8,530

CODE NO.	ITEM					UNIT
30300112	AGGREGATE SUBGRADE IMPROVEMENT 12"					SQ YD
STA	STA	OFFSET (LT/RT)	AREA (SQ FT)	AREA (SQ YD)		QTY (SQ YD)
PAULING RD						
103+80	105+42	LT	808.8	89.9		89.9
103+80	108+19	RT	2179.9	242.2		242.2
106+20	108+19	LT/RT	4369.4	485.5		485.5
106+60	108+19	LT	780.1	86.7		86.7
108+19	108+40	LT/RT	633.5	70.4		70.4
111+61	111+82	LT/RT	633.5	70.4		70.4
111+82	113+30	LT/RT	3265.1	362.8		362.8
111+82	114+74	RT	1450.6	161.2		161.2
111+82	115+45	LT	1803.8	200.4		200.4
RIDGELAND AVE (NORTH)						
30+00	30+52	LT	337.3	37.5		37.5
30+00	30+81	RT	272.2	30.2		30.2
RIDGELAND AVE (SOUTH)						
12+58	12+92	LT	208.4	23.2		23.2
				TOTAL:		1,860

CODE NO.	ITEM					UNIT
28000250	TEMPORARY EROSION CONTROL SEEDING					POUND
STA	STA	OFFSET (LT/RT)	AREA (SF)	AREA (ACRE)	100LB/ACRE	QTY (POUND)
PAULING ROAD						
103+50	106+24	LT	8537.8	0.2	20	20
106+52	109+69	LT	21409.5	0.5	49	49
110+86	115+75	LT	27414.7	0.6	63	63
103+50	109+10	RT	30789.9	0.7	71	71
110+62	114+95	RT	3703.1	0.1	9	9
					TOTAL:	211

CODE NO.	ITEM			UNIT
28000400	PERIMETER EROSION BARRIER			FOOT
STA	STA	OFFSET (LT/RT)	LF	QUANTITY (FOOT)
PAULING ROAD				
108+00	106+24	LT	303.5	304
106+57	109+31	LT	400.4	400
110+86	112+65	LT	246.8	247
112+84	115+75	LT	337.9	338
108+00	109+00	RT	129.9	130
110+67	114+95	RT	484.3	484
			TOTAL:	1,903

CODE NO.	ITEM						UNIT
30300112	AGGREGATE SUBGRADE IMPROVEMENT						CU YD
STA	STA	OFFSET (LT/RT)	AREA (SQ FT)	AREA (SQ YD)	CU FT	CU YD	QTY (CU YD)
PAULING RD							
106+20.0	108+18.6	LT/RT	4369.4	485.5	3004.0	111.3	28
111+81.6	113+30.0	LT/RT	3265.1	362.8	2244.8	83.1	21
						TOTAL:	49

MODEL: Default
FILE NAME: pw:\\atlas-pw.bentley.com:atlas-pw-01\Documents\Projects\1001\1001 CV 008\003\10 CAD\3_Sheets\01_General\D160R76-sht-Schedule.dgn

AEG ATLAS ENGINEERING GROUP, LTD.

USER NAME = cpujari	DESIGNED - NKA	REVISED -	
	DRAWN - NKA	REVISED -	
PLOT SCALE = 100.0000 ' / in.	CHECKED - BA	REVISED -	
PLOT DATE = 3/7/2025	DATE - 03/06/2024	REVISED -	

STATE OF ILLINOIS
DEPARTMENT OF TRANSPORTATION

SCHEDULE OF QUANTITIES
I-57 AT PAULING RD

SCALE: N.T.S. | SHEET 1 OF 4 SHEETS | STA. TO STA.

F.A.I. RTE.	SECTION	COUNTY	TOTAL SHEETS	SHEET NO.
57	99-1HB-2-BR	WILL	133	14
		CONTRACT NO. 60R76		
	ILLINOIS	FED. AID PROJECT		

CODE NO.	ITEM			UNIT
40600275	BITUMINOUS MATERIALS (PRIME COAT)			POUND
STA	STA	LT/RT	AREA (SQ FT)	QTY (POUND)
PAULING RD				
103+80.0	105+41.8	LT	808.8	202
103+80.0	108+18.6	RT	2179.9	545
106+20.0	108+18.6	LT/RT	4372.9	1093
106+60.0	108+18.6	LT	780.0	195
108+18.6	108+39.5	LT/RT	724.3	181
111+57.6	111+81.6	LT/RT	724.3	181
111+81.6	113+30.0	LT/RT	3265.1	816
111+81.6	114+74.3	RT	1450.6	363
111+81.6	115+45.0	LT	1803.8	451
RIDGELAND AVE (NORTH)				
30+00	30+52	LT	337.3	84
30+00	30+81	RT	272.2	68
RIDGELAND AVE (SOUTH)				
12+58	12+92	LT	208.4	52
			TOTAL:	4232

CODE NO.	ITEM			UNIT
40600290	BITUMINOUS MATERIALS (TACK COAT)			POUND
STA	STA	LT/RT	AREA (SQ FT)	QTY (POUND)
PAULING RD - PAVEMENT				
103+50	106+20	LT/RT	5957.1	149
113+30	115+75	LT/RT	5460.0	136
RIDGELAND AVE (NORTH) - PAVEMENT				
30+13	30+81	LT/RT	2430.9	61
RIDGELAND AVE (SOUTH) - PAVEMENT				
12+52	12+92	LT/RT	1502.0	38
PAULING RD - PAVEMENT (EXISTING)				
103+50	106+20	LT/RT	5957.1	298
113+30	115+75	LT/RT	5460.0	273
RIDGELAND AVE (NORTH) - PAVEMENT (EXISTING)				
30+13	30+81	LT/RT	2430.9	122
RIDGELAND AVE (SOUTH) - PAVEMENT (EXISTING)				
12+52	12+92	LT/RT	1502.0	75
PAULING RD - SHOULDER				
103+80	105+42	LT	808.8	20
103+80	108+19	RT	2179.9	54
106+60	108+19	LT	780.1	20
111+82	114+74	RT	1450.6	36
111+82	115+45	LT	1803.8	45
RIDGELAND AVE (NORTH) - SHOULDER				
30+00	30+52	LT	337.3	8
30+00	30+81	RT	272.5	7
RIDGELAND AVE (SOUTH) - SHOULDER				
12+58	12+92	LT	208.4	5
			TOTAL:	1347

CODE NO.	ITEM						UNIT
40600370	LONGITUDINAL JOINT SEALANT						FOOT
STA	OFFSET	LT/RT	STA	OFFSET	LT/RT	LENGTH (FOOT)	QUANTITY
PAULING RD							
103+50	0	LT/RT	108+19	0	LT/RT	469	469
105+42	11	LT	106+60	11	LT	118	119
111+82	0	LT/RT	115+75	0	LT/RT	393	394
114+74	11	RT	115+75	12	RT	101	101
RIDGELAND AVE							
30+13	0	LT/RT	30+81	0	LT/RT	69	69
12+52	1	LT/RT	12+92	0	LT/RT	40	41
						TOTAL:	1,193

CODE NO.	ITEM				UNIT
40600400	MIXTURE FOR CRACKS, JOINTS, AND FLANGEWAYS				TON
STA	STA	AREA (SQ FT)	AREA (SQ YD)	QUANTITY (TON)	
PAULING RD					
103+50	108+19	10326.6	1148	4	
111+82	115+75	8685.9	966	3	
RIDGELAND AVE					
30+13	30+81	2430.9	271	1	
12+52	12+92	1541.3	172	1	
				TOTAL:	9

CODE NO.	ITEM					UNIT
40600982	HOT-MIX ASPHALT SURFACE REMOVAL - BUTT JOINT					SQ YD
STATION	STATION	OFFSET	AREA (SQ FT)	AREA (SQ YD)		QUANTITY
PAULING ROAD						
103+50	103+55	LT/RT	99.0	11		11
106+10	106+35	LT	97.3	11		11
114+99	115+46	RT	101.2	11		11
115+71	115+75	LT/RT	104.3	12		12
				TOTAL:		45

CODE NO.	ITEM					UNIT
40701846	HOT-MIX ASPHALT PAVEMENT (FULL-DEPTH), 8 1/4"					SQ YD
STA	STA	OFFSET (LT/RT)	AREA (SQ FT)	AREA (SQ YD)		QUANTITY (SQ YD)
PAULING RD						
106+20	108+19	LT/RT	4369.4	485.5		485
111+82	113+30	LT/RT	3265.1	362.8		363
				TOTAL:		849

CODE NO.	ITEM					UNIT
40603200	POLYMERIZED HOT-MIX ASPHALT BINDER COURSE, IL-4.75, N50					TON
STA	STA	OFFSET (LT/RT)	AREA (SQ FT)	AREA (SQ YD)	THICKNESS (IN)	QUANTITY (TON)
PAULING RD						
103+50	106+20	LT/RT	5972.2	663.6	0.75	28
111+82	115+75	LT/RT	5420.7	602.3	0.75	25
RIDGELAND AVE (NORTH)						
30+13	30+81	LT/RT	2430.9	270.1	0.75	11
RIDGELAND AVE (SOUTH)						
12+52	12+92	LT/RT	1541.3	171.3	0.75	7
					TOTAL:	72

CODE NO.	ITEM					UNIT
40604062	HOT-MIX ASPHALT SURFACE COURSE, IL-9.5, MIX "D", N70					TON
STA	STA	OFFSET (LT/RT)	AREA (SQ FT)	AREA (SQ YD)	THICKNESS (IN)	QUANTITY (TON)
PAULING RD						
103+50	106+20	LT/RT	5972.2	663.6	1.50	56
111+82	115+75	LT/RT	5420.7	602.3	1.50	51
RIDGELAND AVE (NORTH)						
30+13	30+81	LT/RT	2430.9	270.1	1.50	23
RIDGELAND AVE (SOUTH)						
12+52	12+92	LT/RT	1541.3	171.3	1.50	14
					TOTAL:	144

CODE NO.	ITEM				UNIT
42000060	WELDED WIRE REINFORCEMENT				SQ YD
STA	STA	OFFSET (LT/RT)	AREA (SQ FT)	AREA (SQ YD)	QTY (SQ YD)
PAULING RD					
108+19	108+43	LT/RT	526.7	58.5	58.5
111+58	111+82	LT/RT	526.7	58.5	58.5
				TOTAL:	117

CODE NO.	ITEM				UNIT
4200080	PAVEMENT CONNECTOR (PCC) FOR BRIDGE APPROACH SLAB				SQ YD
STA	STA	OFFSET (LT/RT)	AREA (SQ FT)	AREA (SQ YD)	QTY (FOOT)
PAULING RD					
108+19	108+43	LT/RT	724.2	80.5	80.5
111+58	111+82	LT/RT	724.2	80.5	80.5
				TOTAL:	161

CODE NO.	ITEM				UNIT
44000100	PAVEMENT REMOVAL				SQ YD
STATION	STATION	OFFSET	AREA (SQ FT)	AREA (SQ YD)	QUANTITY
PAULING RD					
103+50	105+46	LT	194.6	22	22
103+50	108+65	RT	366.5	41	41
106+75	108+80	LT	402.4	45	45
111+82	115+75	LT	395.8	44	44
111+82	1114+83	RT	383.7	43	43
108+19	108+72	RT/LT	1174.1	130	130
111+28	111+82	RT/LT	1429.2	159	159
				TOTAL:	483

CODE NO.	ITEM				UNIT
44000158	HOT-MIX ASPHALT SURFACE REMOVAL, 2 1/4"				SQ YD
STATION	STATION	OFFSET	AREA (SQ FT)	AREA (SQ YD)	QUANTITY
PAULING RD					
103+50	108+19	LT/RT	12588.8	1399	1,399
111+82	115+75	LT/RT	10076.0	1120	1120
				TOTAL:	2,518

CODE NO.	ITEM						UNIT
44201729	CLASS D PATCHES, TYPE II, 7 INCH						SQ YD
STA	STA	OFFSET (LT/RT)	LENGHT (FT)	AREA (SQ FT)	AREA (SQ YD)		QTY (SQ YD)
(10% OF RESURFACING AREA)							
PAULING RD							
103+50	106+20	LT/RT		5957.1	661.9		66
111+82	115+75	LT/RT		5420.7	602.3		60
RIDGELAND AVE (NORTH)							
30+13	30+81	LT/RT	2430.9	270.1	270.1		27
RIDGELAND AVE (SOUTH)							
12+52	12+92	LT/RT	1541.3	171.3	171.3		17
						TOTAL:	171

CODE NO.	ITEM			UNIT
50104400	CONCRETE HEADWALL REMOVAL			EACH
STATION	OFFSET	LT/RT		QUANTITY
PAULING RD				
105+40	31	LT		1
105+40	29	RT		1
			TOTAL:	2

CODE NO.	ITEM				UNIT
50104701	REMOVAL OF EXISTING CONCRETE DECK NO. 1				EACH
STATION	STATION	OFFSET	AREA (SQ FT)	AREA (SQ YD)	QUANTITY
PAULING RD					
108+64	111+20	LT/RT	6,774.3	753	1
				TOTAL:	1

CODE NO.	ITEM						UNIT
44201733	CLASS D PATCHES, TYPE III, 7 INCH						SQ YD
STA	STA	OFFSET (LT/RT)	LENGHT (FT)	WIDTH (FT)	AREA (SQ FT)	AREA (SQ YD)	QTY (SQ YD)
PAULING RD PIPE CULVERT							
105+37	105+45	LT/RT	8.0	22.0	176.0	19.6	20
(10% OF RESURFACING AREA)							
PAULING RD							
103+50	106+20	LT/RT			5957.1	661.9	66
111+82	115+75	LT/RT			5420.7	602.3	60
RIDGELAND AVE (NORTH)							
30+13	30+81	LT/RT			2430.9	270.1	27
RIDGELAND AVE (SOUTH)							
12+52	12+92	LT/RT			1541.3	171.3	17
						TOTAL:	190

CODE NO.	ITEM			UNIT
48101620	AGGREGATE SHOULDERS, TYPE B 10"			SQ YD
STA	STA	OFFSET (LT/RT)	AREA (SQ FT)	AREA (SQ YD)	QTY (SQ YD)
PAULING RD					
103+50	103+80	LT	96.3	10.7	11
103+50	103+80	RT	91.6	10.2	10
115+45	115+75	LT	89.7	10.0	10
RIDGELAND AVE (NORTH)					
30+52	30+81	LT	78.2	8.7	9
30+81	31+27	RT	171.0	19.0	19
RIDGELAND AVE (SOUTH)					
12+00	12+58	LT	213.6	23.7	24
12+52	12+92	RT	245.5	27.3	27
				TOTAL:	110

CODE NO.	ITEM				UNIT
48203030	HOT-MIX ASPHALT SHOULDERS, 8 ½"				SQ YD
STA	STA	OFFSET (LT/RT)	AREA (SQ FT)	AREA (SQ YD)	QTY (SQ YD)
PAULING RD					
103+80	105+42	LT	808.8	89.9	90
103+80	108+19	RT	2179.9	242.2	242
106+60	108+19	LT	780.1	86.7	87
111+82	114+74	RT	1450.6	161.2	161
111+82	115+45	LT	1803.8	200.4	200
RIDGELAND AVE (NORTH)					
30+00	30+52	LT	337.3	37.5	37
30+00	30+81	RT	272.2	30.2	30
RIDGELAND AVE (SOUTH)					
12+58	12+92	LT	208.4	23.2	23
				TOTAL:	871

CODE NO.	ITEM		UNIT
60600095	CLASS SI CONCRETE OUTLET		CU YD
STA	STA	OFFSET	QUANTITY (CU YD)
114+68	114+80	LT	0.5
		TOTAL:	0.5

MODEL: Default
FILE NAME: pw:\\atlas-pw.bentley.com:atlas-pw-01\Documents\Projects\100\1001 CV 008.003\10 CAD\3 Sheets\01_General\D16R76-sht-Schedule.dgn

ATLAS ENGINEERING GROUP, LTD.

USER NAME = cpujari	DESIGNED - NKA	REVISED -	
	DRAWN - NKA	REVISED -	
PLOT SCALE = 100.0000 ' / in.	CHECKED - BA	REVISED -	
PLOT DATE = 3/7/2025	DATE - 03/06/2024	REVISED -	

STATE OF ILLINOIS
DEPARTMENT OF TRANSPORTATION

SCHEDULE OF QUANTITIES
I-57 AT PAULING RD

SCALE: N.T.S. | SHEET 2 OF 4 SHEETS | STA. | TO STA.

F.A.I. RTE.	SECTION	COUNTY	TOTAL SHEETS	SHEET NO.
57	99-1HB-2-BR	WILL	133	15
		CONTRACT NO. 60R76		
	ILLINOIS	FED. AID PROJECT		

CODE NO.	ITEM				UNIT
63000001	STEEL PLATE BEAM GUARDRAIL, TYPE A, 6 FOOT POSTS				FOOT
STA	OFFSET	ATA	OFFSET	LENGTH (FOOT)	QTY (FOOT)
PAULING RD					
105+98	RT	108+23	RT	225.0	225.0
106+55	LT	108+42	LT	187.5	187.5
111+58	RT	114+83	RT	325.0	325.0
111+77	LT	114+77	LT	300.0	300.0
RIDGELAND AVE NORTH LEG					
30+42	RT	30+67	RT	50.0	50.0
RIDGELAND AVE SOUTH LEG					
12+59	RT	12+92	LT	32.5	32.5
I-57					
1235+56	LT	1236+31	LT	75.0	75.0
1238+03	RT	1238+65	RT	62.5	62.5
				TOTAL:	1262.5

CODE NO.	ITEM		UNIT
63100045	TRAFFIC BARRIER TERMINAL, TYPE 2		EACH
STA	OFFSET	QTY (EACH)	QTY
I-57			
1235+44	LT	1	1
1238+65	RT	1	1
		TOTAL:	2

CODE NO.	ITEM		UNIT
63100085	TRAFFIC BARRIER TERMINAL, TYPE 6		EACH
STA	OFFSET	QTY (EACH)	QTY
PAULING RD			
108+62	RT	1	1
108+81	LT	1	1
111+19	RT	1	1
111+38	LT	1	1
		TOTAL:	4

CODE NO.	ITEM		UNIT
63100089	TRAFFIC BARRIER TERMINAL, TYPE 6B		EACH
STA	OFFSET	QTY (Each)	QTY
I-57			
1236+31	LT	1	1
1237+51	RT	1	1
		TOTAL:	2

CODE NO.	ITEM		UNIT
63100167	TRAFFIC BARRIER TERMINAL, TYPE 1 (SPECIAL) TANGENT		EACH
STA	OFFSET	QTY (EACH)	QTY
PAULING RD			
105+48	RT	1	1
114+77	LT	1	1
RIDGELAND AVE NORTH LEG			
31+17	RT	1	1
RIDGELAND AVE SOUTH LEG			
12+09	RT	1	1
		TOTAL:	4

CODE NO.		ITEM		UNIT
63200310		GUARDRAIL REMOVAL		FOOT
STA	STA	OFFSET	LENGTH (FOOT)	QUANTITY
PAULING RD				
104+24	106+08	LT	200.5	201
104+28	108+68	RT	440.3	440
106+37	108+85	LT	331.1	331
111+32	115+85	LT	453.4	453
111+15	114+95	RT	430.0	430
			TOTAL:	1,855

CODE NO.	ITEM				UNIT
66500105	WOVEN WIRE FENCE, 4'				FOOT
STA	OFFSET	STA	OFFSET	LENGTH (FOOT)	QTY
PAULING RD					
103+50	40 RT	108+00	112.4 RT	455.4	455
113+06	94.4 LT	116+03	40 RT	300.6	301
				TOTAL:	756

CODE NO.	ITEM		UNIT
72501000	TERMINAL MARKER - DIRECT APPLIED		EACH
STA	OFFSET	QTY (EACH)	QTY
PAULING RD			
105+73	RT	1	1
114+21	RT	1	1
11477	LT	1	1
RIDGELAND AVE NORTH LEG			
31+17	RT	1	1
I-57			
1235+66	LT	1	1
1238+81	RT	1	1
		TOTAL:	6

CODE NO.	ITEM				UNIT
78200005	GUARDRAIL REFLECTORS, TYPE A				EACH
STA	OFFSET	STA	OFFSET	QTY (EACH)	QTY
PAULING RD					
105+73	RT	108+23	RT	4	4
106+55	LT	108+42	LT	4	4
111+58	RT	114+21	RT	4	4
111+77	LT	114+77	LT	4	4
RIDGELAND AVE NORTH LEG					
30+42	RT	30+67	RT	4	4
I-57					
1235+66	LT	1236+41	LT	4	4
1238+18	RT	1238+81	RT	4	4
				TOTAL:	28

CODE NO.		ITEM		UNIT
Z0022800		FENCE REMOVAL		FOOT
STATION	STATION	OFFSET	LENGTH (FOOT)	QUANTITY
PAULING RD				
105+81	108+00	RT	285.6	286
113+05	115+17	LT	228.0	228
			TOTAL:	514

CODE NO.	ITEM			UNIT
Z0064800	SELECTIVE CLEARING			UNIT
STA	STA	LT/RT	AREA (SQ FT)	QUANTITY (UNIT)
103+50	108+03	RT	4239.3	4.2
103+50	106+11	LT	1879.8	1.9
113+08	115+75	LT	2372.0	2.4
			TOTAL:	9

CODE NO.	ITEM				UNIT
21001000	GEOTECHNICAL FABRIC FOR GROUND STABILIZATION				CU YD
STA	STA	OFFSET (LT/RT)	AREA (SQ FT)	AREA (SQ YD)	QTY (CU YD)
PAULING RD					
106+20.0	108+18.6	LT/RT	4369.4	485.5	121
111+81.6	113+30.0	LT/RT	3265.1	362.8	91
				TOTAL:	212

MODEL: Default
FILE NAME: pw:\\atlas-pw.bentley.com:atlas-pw-01\Documents\Projects\100111001 CV 008\003310 CAD\3_Sheets\01_General\D 60R76-sht-Schedule.dgn

AEG ATLAS ENGINEERING GROUP, LTD.

USER NAME = cpujari	DESIGNED - NKA	REVISED -	
	DRAWN - NKA	REVISED -	
PLOT SCALE = 100.0000 ' / in.	CHECKED - BA	REVISED -	
PLOT DATE = 3/7/2025	DATE - 03/06/2024	REVISED -	

STATE OF ILLINOIS
DEPARTMENT OF TRANSPORTATION

SCHEDULE OF QUANTITIES
I-57 AT PAULING RD

SCALE: N.T.S. | SHEET 3 OF 4 SHEETS | STA. TO STA.

F.A.I. RTE.	SECTION	COUNTY	TOTAL SHEETS	SHEET NO.
57	99-1HB-2-BR	WILL	133	16
		CONTRACT NO. 60R76		
	ILLINOIS	FED. AID PROJECT		

Location Sta to Sta	Removal & Disposal of Unsuitable Material(20201200) (CU YD)	EARTH EXCAVATION (20200100) (CU YD)	Excavation To Be Used In Embankment (Adj. For Shrinkage) 15% (CU YD)	Embankment (CU YD)	Earthwork Balance Waste (+) or Shortage (-) FURNISHED EXCAVATION (20400800) (CU YD)
103+50.00	5	0	0	0	0
103+75.00	16	19	16	8	8
104+00.00	19	32	27	11	16
104+25.00	22	31	26	15	11
104+50.00	25	27	23	28	-5
104+75.00	26	26	22	43	-21
105+00.00	28	30	26	49	-23
105+25.00	34	26	22	86	-64
105+41.00	22	10	9	98	-89
105+50.00	27	6	5	58	-53
105+75.00	30	30	26	123	-97
106+00.00	36	59	50	102	-52
106+25.00	31	70	60	119	-59
106+50.00	31	65	56	152	-96
106+75.00	54	63	53	244	-191
107+00.00	53	69	59	379	-320
107+25.00	57	76	64	451	-387
107+50.00	60	78	66	483	-417
107+75.00	63	85	72	510	-438
108+00.00	67	94	80	532	-452
108+25.00	67	72	61	560	-499
108+50.00	65	32	27	596	-569
108+73.98	2	9	8	278	-270
109+00.00	0	0	0	0	0
109+25.00	0	0	0	0	0
109+50.00	0	0	0	0	0
109+75.00	0	0	0	0	0
110+00.00	0	0	0	0	0
110+25.00	0	0	0	0	0
110+50.00	0	0	0	0	0
110+75.00	0	0	0	0	0
111+00.00	0	0	0	0	0
111+26.22	0	0	0	0	0
111+50.00	36	10	8	155	-147
111+75.00	39	15	13	348	-335
112+00.00	38	12	10	341	-331
112+25.00	40	22	19	349	-330
112+50.00	41	35	30	365	-335
112+70.92	38	26	23	272	-249
112+75.00	22	5	5	45	-40
112+79.47	25	10	8	49	-41
113+00.00	43	43	36	233	-197
113+25.00	36	42	36	274	-238
113+50.00	33	31	27	235	-208
113+75.00	31	17	14	196	-182
114+00.00	28	13	11	160	-149
114+25.00	25	11	9	133	-124
114+50.00	24	10	8	112	-104
114+75.00	29	13	11	91	-80
115+00.00	19	15	13	62	-49
115+25.00	11	10	9	34	-25
115+50.00	15	14	12	28	-16
115+75.00	13	13	11	23	-12
TOTALS	1,425	1,374	1,171	8,428	-7,257

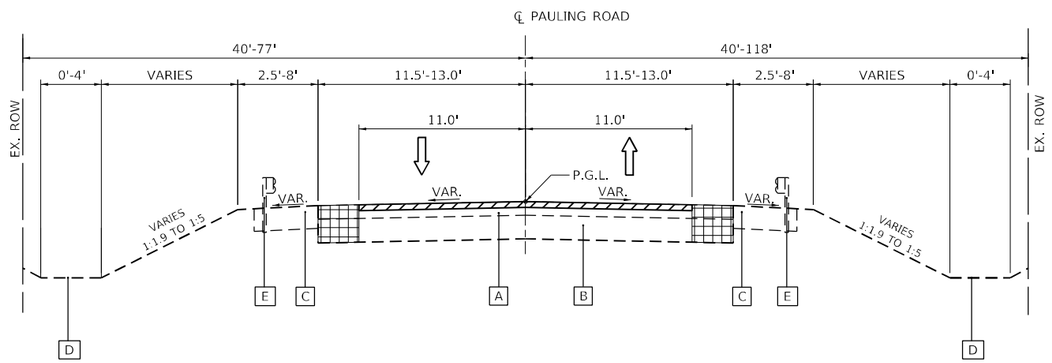

PAULING ROAD
EXISITNG TYPICAL SECTION

(LOOKING EAST)
STA. 103+50.00 TO 106+20.00
STA. 113+30.00 TO 115+75.00

EXISTING LEGEND

- A EXISTING HOT-MIX ASPHALT PAVEMENT, VARIES 5 TO 10 INCHES
- B EXISTING AGGREGATE SUBBASE, VARIES 2 TO 14.5 INCHES
- C EXISTING AGGREGATE SHOULDER (TO BE REMOVED AS PART OF EARTH EXCAVATION)
- D EXISTING SWALE / DITCH
- E EXISTING GUARDRAIL TO BE REMOVED (FOR DETAILS SEE ROADWAY PLANS)

HOT-MIX ASPHALT SURFACE REMOVAL, 2 1/4"

PAVEMENT REMOVAL

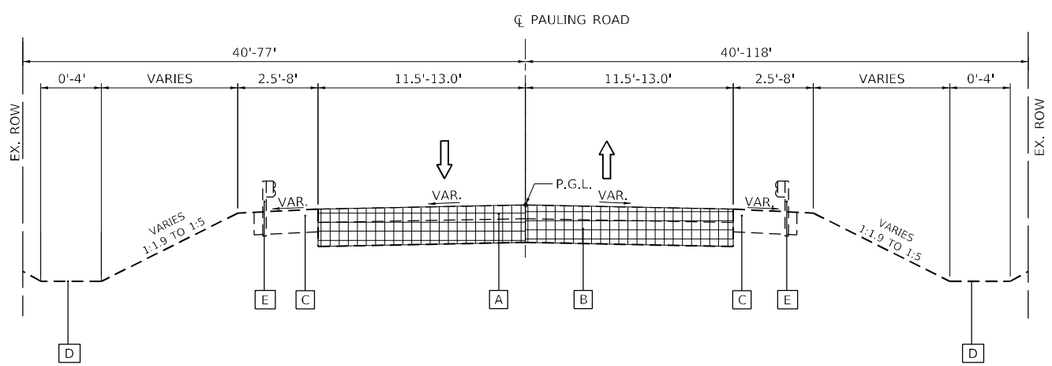

PAULING ROAD
EXISITNG TYPICAL SECTION

(LOOKING EAST)
STA 106+20.00 TO STA 108+71.89
STA 111+27.69 TO STA 113+30.00

MODEL: Default
FILE NAME: pw:\\atlas-pw.bentley.com:atlas-pw-01\Documents\Projects\100\1001 CV 008.003\10 CAD\3 Sheets\02 Typicals\D160R76-IH-Typical Sections1.dgn

AEG ATLAS ENGINEERING GROUP, LTD.	USER NAME = cpujari	DESIGNED - NJJ	REVISED -	STATE OF ILLINOIS DEPARTMENT OF TRANSPORTATION	EXISTING TYPICAL SECTIONS I-57 AT PAULING RD
		DRAWN - NJJ	REVISED -		
	PLOT SCALE = 10.0000 ' / in.	CHECKED - BA	REVISED -		
	PLOT DATE = 3/7/2025	DATE - 03/06/2024	REVISED -		SCALE: N.T.S. SHEET 1 OF 3 SHEETS STA. TO STA.

F.A.I. RTE.	SECTION	COUNTY	TOTAL SHEETS	SHEET NO.
57	99-1HB-2-BR	WILL	133	18
		CONTRACT NO. 60R76		
	ILLINOIS	FED. AID PROJECT		

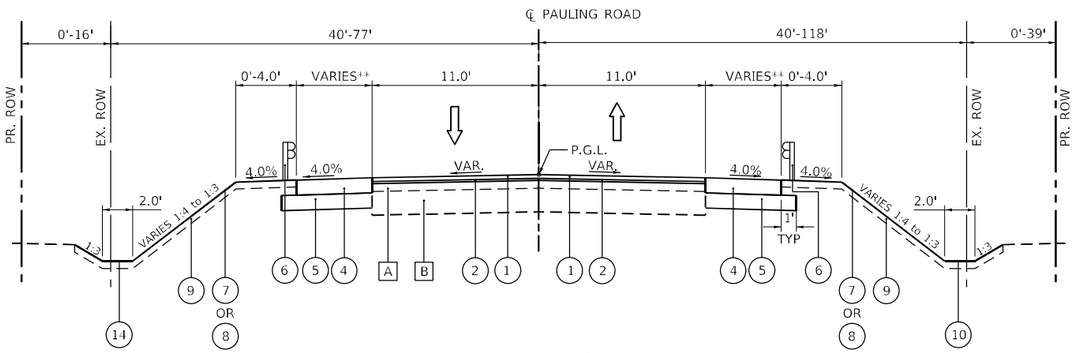

PAULING ROAD
PROPOSED TYPICAL SECTION

(LOOKING EAST)
STA. 103+50.00 TO 106+20.00
STA. 114+65.59 TO 115+75.00
** SEE ROADWAY PLANS

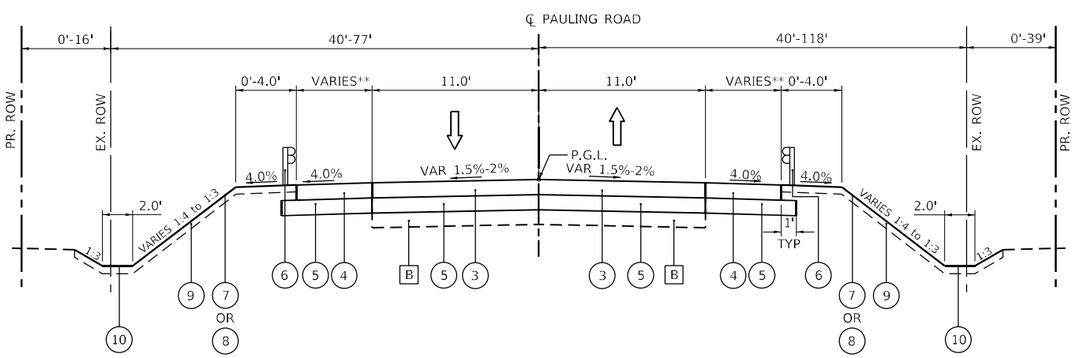

PAULING ROAD
PROPOSED TYPICAL SECTION

(LOOKING EAST)
STA. 106+20.00 TO 108+18.60
* BRIDGE OMISSION STA. 108+18.60 TO 111+81.60
** SEE ROADWAY PLANS

HOT–MIX ASPHALT MIXTURE REQUIREMENTS		
MIXTURE TYPE	**AIR VOIDS NDES**	**QUALITY MANAGEMENT PROGRAM (QMP)**
PAVEMENT RESURFACING, 2 ¼" (PAULING ROAD)		
HOT-MIX ASPHALT SURFACE COURSE, MIX "D", IL-9.5, N70, 1 ½"	4% @ 70 GYR.	QC/QA
POLYMERIZED HOT-MIX ASPHALT BINDER COURSE, IL-4.75, N50, ¾"	3.5% @ 50 GYR.	QC/QA
HOT–MIX ASPHALT PAVEMENT (FULL DEPTH), 8 ¼" (PAULING ROAD)		
HOT-MIX ASPHALT SURFACE COURSE, MIX "D", IL-9.5, N70, 1 ½"	4% @ 70 GYR.	QC/QA
POLYMERIZED HOT-MIX ASPHALT BINDER COURSE, IL-4.75, N50, ¾"	3.5% @ 50 GYR.	QC/QA
HOT-MIX ASPHALT BASE COURSE, IL-19.0, N70, 6"	4% @ 70 GYR.	QC/QA
HOT–MIX ASPHALT SHOULDER, 8 ¼"		
HOT-MIX ASPHALT SURFACE COURSE, MIX "D", IL-9.5, N70, 1 ½"[1]	4% @ 70 GYR.	QC/QA
HOT-MIX ASPHALT BINDER COURSE, IL-19.0, N70, 6 ¾"	4% @ 70 GYR.	QC/QA
CLASS D PATCHES, 7"		
HOT-MIX ASPHALT BINDER COURSE, IL-19.0, N70	4% @ 70 GYR.	QC/QA
QMP DESIGNATION: QUALITY CONTROL/QUALITY ASSURANCE (QC/QA); QUALITY CONTROL FOR PERFORMANCE (QCP)		

1. THE UNIT WEIGHT USED TO CALCULATE ALL HOT-MIX ASPHALT SURFACE MIX QUANTITIES IS 112 LBS/SQ YD/IN.
2. THE "AC TYPE" FOR POLYMERIZED HMA MIXES SHALL BE "SBS/SBR PG 76-22" AND FOR NON-POLYMERIZED HMA THE "AC TYPE" SHALL BE "PG 64-22" UNLESS MODIFIED BY RECLAIMED MATERIAL SPECIFICATIONS.

PROPOSED LEGEND

1. HOT-MIX ASPHALT SURFACE COURSE, IL-9.5, MIX "D", N70 - 1 ½"
2. POLYMERIZED HOT-MIX ASPHALT BINDER COURSE, IL-4.75, N50, ¾"
3. HOT-MIX ASPHALT PAVEMENT (FULL-DEPTH), 8 ¼"
4. HOT-MIX ASPHALT SHOULDERS, 8 ¼"
5. AGGREGATE SUBGRADE IMPROVEMENT, 12"
6. STEEL PLATE BEAM GUARDRAIL (FOR DETAILS SEE ROADWAY PLANS)
7. SEEDING, CLASS 4A
8. SEEDING, CLASS 4B
9. TOPSOIL FURNISH AND PLACE, 4"
10. SWALE/DITCH
11. CONCRETE GUTTER, TYPE B (STD. 606201)

EXISTING LEGEND

- A EXISTING HOT-MIX ASPHALT PAVEMENT, VARIES 5 TO 10 INCHES
- B EXISTING AGGREGATE SUBBASE, VARIES 2 TO 14.5 INCHES

NOTE

THE LONGITUDINAL JOINT SEALANT SHALL BE PLACED OVER THE POLYMERIZED HMA BINDER COURSE IL-4.75, N50.

MODEL: Default
FILE NAME: pw:\\atlas-pw.bentley.com:atlas-pw-01\Documents\Projects\100\1001 CV 008.003\10 CAD\3 Sheets\02 Typical\R016R76-IH-Typical Sections2.dgn

AEG ATLAS ENGINEERING GROUP, LTD.	USER NAME = cpujari	DESIGNED - NJJ	REVISED -
		DRAWN - NJJ	REVISED -
	PLOT SCALE = 10.0000 ' / in.	CHECKED - BA	REVISED -
	PLOT DATE = 3/7/2025	DATE - 03/06/2024	REVISED -

STATE OF ILLINOIS
DEPARTMENT OF TRANSPORTATION

PROPOSED TYPICAL SECTIONS
I–57 AT PAULING RD

SCALE: N.T.S. | SHEET 2 OF 3 SHEETS | STA. | TO STA.

F.A.I. RTE.	SECTION	COUNTY	TOTAL SHEETS	SHEET NO.
57	99-1HB-2-BR	WILL	133	19
		CONTRACT NO. 60R76		
	ILLINOIS	FED. AID PROJECT		

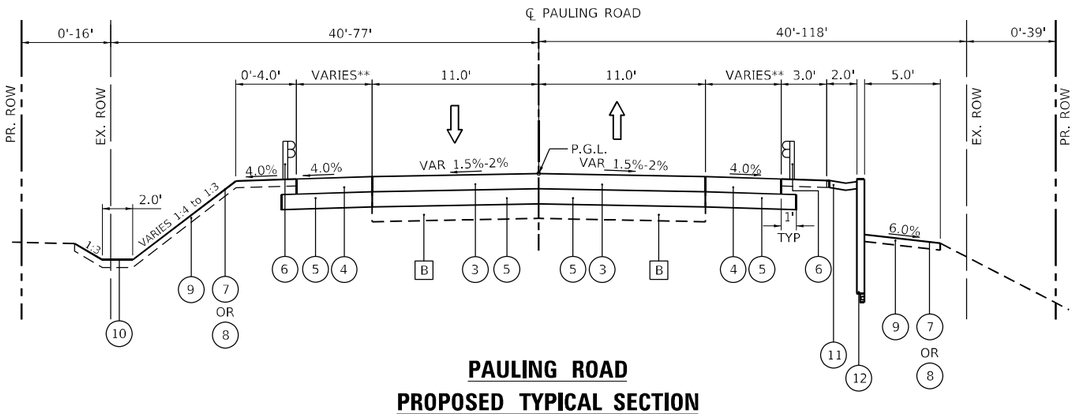

PAULING ROAD
PROPOSED TYPICAL SECTION

(LOOKING EAST)

*BRIDGE OMISSION STA. 108+18.60 TO 111+81.60
STA. 111+81.60 TO 113+30.00
** SEE ROADWAY PLANS

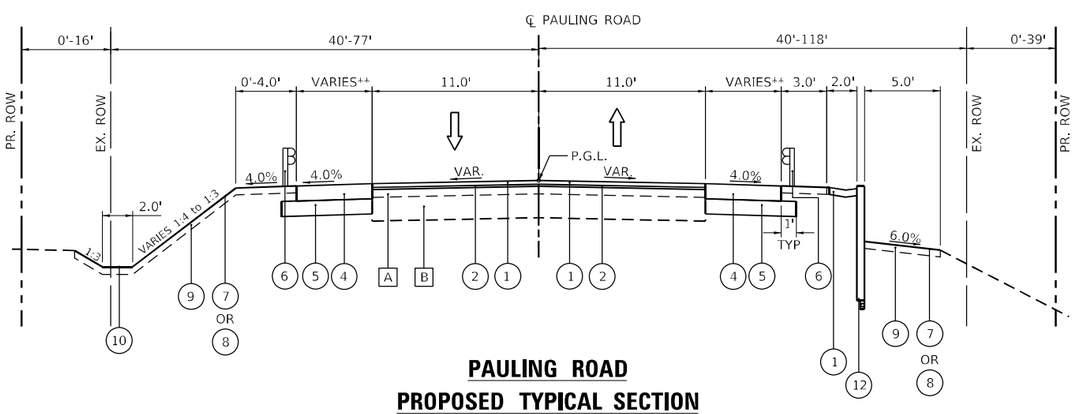

PAULING ROAD
PROPOSED TYPICAL SECTION

(LOOKING EAST)

STA. 113+30.00 TO 114+65.59
** SEE ROADWAY PLANS

PROPOSED LEGEND

1. HOT-MIX ASPHALT SURFACE COURSE, IL-9.5, MIX "D", N70 - 1 1/2"
2. POLYMERIZED HOT-MIX ASPHALT BINDER COURSE, IL-4.75, N50 - ¾"
3. HOT-MIX ASPHALT PAVEMENT (FULL-DEPTH), 8 ¼"
4. HOT-MIX ASPHALT SHOULDERS, 8 ¼"
5. AGGREGATE SUBGRADE IMPROVEMENT, 12"
6. STEEL PLATE BEAM GUARDRAIL (FOR DETAILS SEE ROADWAY PLANS)
7. SEEDING, CLASS 4A
8. SEEDING, CLASS 4B
9. TOPSOIL FURNISH AND PLACE, 4"
10. SWALE/DITCH
11. CONCRETE GUTTER, TYPE B (STD. 606201)
12. RETAINING WALL S.N. 099-W1000, STA 111+28.15 TO STA 114+ 65.59 SEE STRUCTURAL PLANS

EXISTING LEGEND

- A EXISTING HOT-MIX ASPHALT PAVEMENT, VARIES 5 TO 10 INCHES
- B EXISTING AGGREGATE SUBBASE, VARIES 2 TO 14.5 INCHES

NOTE

THE LONGITUDINAL JOINT SEALANT SHALL BE PLACED OVER THE POLYMERIZED HMA BINDER COURSE IL-4.75, N50.

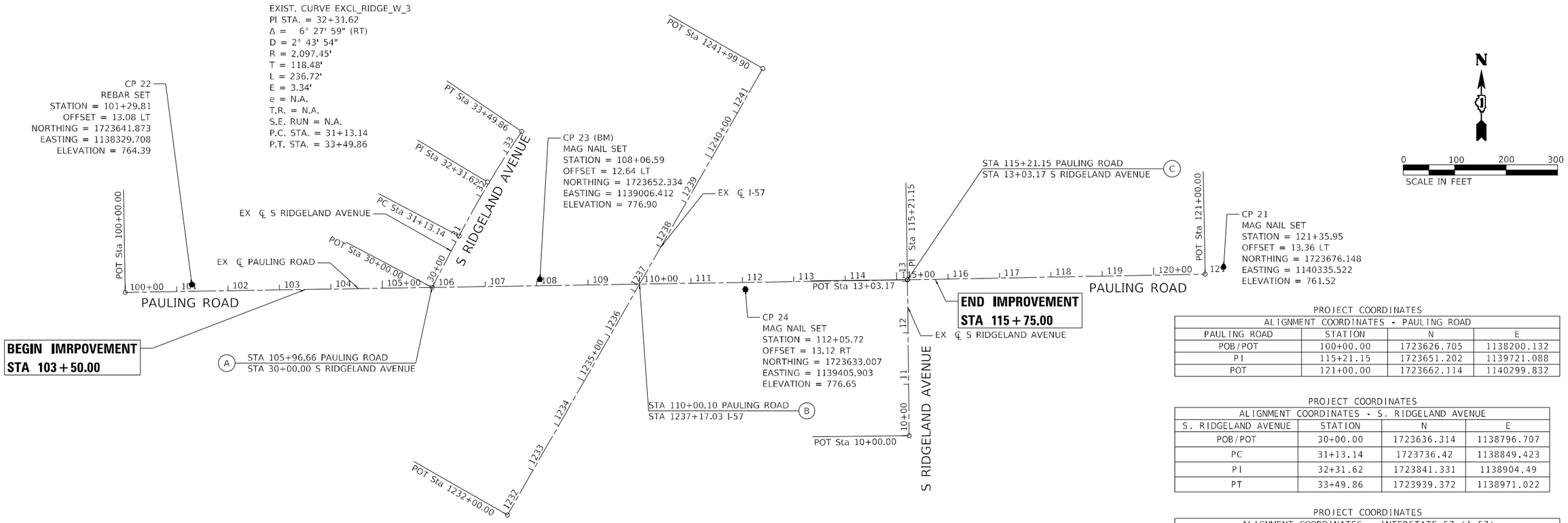

PROJECT COORDINATES

ALIGNMENT COORDINATES - PAULING ROAD			
PAULING ROAD	STATION	N	E
POB/POT	100+00.00	1723626.705	1138200.132
PI	115+21.15	1723651.202	1139721.088
POT	121+00.00	1723662.114	1140299.832

PROJECT COORDINATES

ALIGNMENT COORDINATES - S. RIDGELAND AVENUE			
S. RIDGELAND AVENUE	STATION	N	E
POB/POT	30+00.00	1723636.314	1138796.707
PC	31+13.14	1723736.42	1138849.423
PI	32+31.62	1723841.331	1138904.49
PT	33+49.86	1723939.372	1138971.022

PROJECT COORDINATES

ALIGNMENT COORDINATES - INTERSTATE-57 (I-57)			
INTERSTATE-57 (I-57)	STATION	N	E
POB/POT	1232+00.00	1723194.022	1138943.37
POT	1241+99.90	1724061.949	1139439.87

PROJECT COORDINATES

ALIGNMENT COORDINATES - S RIDGELAND AVENUE			
S RIDGELAND AVENUE	STATION	N	E
POB/POT	13+03.17	1723651.202	1139721.088
POT	10+00.00	1723348.045	1139724.213

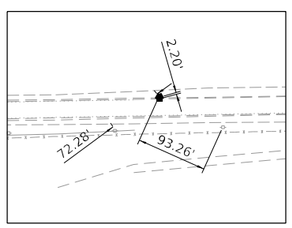

CP 21
PAULING ROAD
MAG NAIL SET
STATION = 121+35.95
OFFSET = 13.36 LT
NORTHING = 1723676.148
EASTING = 1140335.522
ELEVATION = 761.52

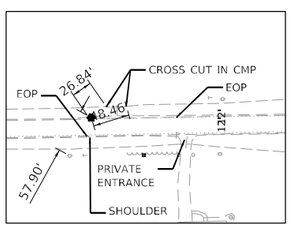

CP 22
PAULING ROAD
REBAR SET
STATION = 101+29.81
OFFSET = 13.08 LT
NORTHING = 1723641.873
EASTING = 1138329.708
ELEVATION = 764.39

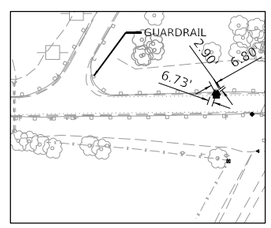

CP 23
PAULING ROAD
MAG NAIL SET
STATION = 108+06.59
OFFSET = 12.64 LT
NORTHING = 1723652.334
EASTING = 1139006.412
ELEVATION = 776.90

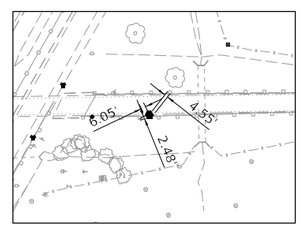

CP 24
PAULING ROAD
MAG NAIL SET
STATION = 112+05.72
OFFSET = 13.12 RT
NORTHING = 1723633.007
EASTING = 1139405.903
ELEVATION = 776.65

CONTROL POINTS COORDINATES

PAULING ROAD						
PT #	STATION	OFFSET	N	E	ELEV	DESCRIPTION
21	121+35.95	13.36	1723676.148	1140335.522	761.52	TRAVERSE STATION
22	101+29.81	13.08	1723641.873	1138329.708	764.39	TRAVERSE STATION
23	108+06.59	12.64	1723652.334	1139006.412	776.90	TRAVERSE STATION
24	112+05.72	13.12	1723633.007	1139405.903	776.65	TRAVERSE STATION

PROJECT BENCHMARKS

PAULING ROAD				
PT #	STATION	OFFSET	ELEV	DESCRIPTION
CP-23	108+06.59	12.64' LT	776.9	N = 1723652.334 E = 1139006.412

NOTES

1. ALL COORDINATES SHOWN ARE BASED UPON THE ILLINOIS STATE PLANE COORDINATE SYSTEM EAST ZONE, MAP COORDINATES REFLECT NAD 83 (2011)
2. ALL COORDINATE VALUES SHOWN ARE IN THE U.S. SURVEY FOOT UNITS.
3. ELEVATIONS REFLECT THE NAVD 88 (GEOID12A ADJUSTMENT).
4. SOME OR ALL OF THE CONTROL POINTS AND BENCHMARKS MAY BE DESTROYED DURING CONSTRUCTION. IT SHALL BE THE CONTRACTOR'S RESPONSIBILITY TO IDENTIFY AND RELOCATE THESE OUTSIDE OF THE CONSTRUCTION LIMITS PRIOR TO COMMENCEMENT OF CONSTRUCTION.

MODEL: Default
FILE NAME: pw:\\atlas-pw.bentley.com:atlas-pw-01\Documents\Projects\1001\1001 CV 008\003\10 CAD\3-Sheets\03_ATR\0160R76-IH-alt.dgn

AEG ATLAS ENGINEERING GROUP, LTD.	USER NAME = cpujari	DESIGNED - CVP	REVISED -
		DRAWN - CVP	REVISED -
	PLOT SCALE = 200.0000 ' / in.	CHECKED - BA	REVISED -
	PLOT DATE = 3/7/2025	DATE - 03/06/2024	REVISED -

STATE OF ILLINOIS
DEPARTMENT OF TRANSPORTATION

ALIGNMENT, TIES AND BENCHMARKS
I-57 AT PAULING RD

SCALE: 1" = 100' | SHEET 1 OF 1 SHEETS | STA. TO STA.

F.A.I. RTE.	SECTION	COUNTY	TOTAL SHEETS	SHEET NO.
57	99-1HB-2-BR	WILL	133	21

CONTRACT NO. 60R76
ILLINOIS FED. AID PROJECT

STATE OF ILLINOIS
DEPARTMENT OF TRANSPORTATION
DIVISION OF HIGHWAYS

PLAT OF HIGHWAYS

I–57
SECTION
WILL COUNTY
LIMITS: AT PAULING ROAD
JOB NO.: R–91–001–21

PARCEL NUMBER	OWNER	SHEET NUMBER	PROPERTY ACQUIRED BY
1P80001	CHICAGO TITLE LAND TRUST COMPANY AS SUCCESSOR TO FIRST NATIONAL BANK IN CHICAGO HEIGHTS AS TRUSTEE UNDER TRUST AGREEMENT DATED JANUARY 3, 1969 KNOWN AS TRUST NO. 1059	2 & 4	23ED18
1P80002	CHRISTOPHER ARRIGONI, AN UNMARRIED MAN	2 & 4	R2023025399
1P80003	CHICAGO TITLE LAND TRUST COMPANY AS SUCCESSOR TO FIRST NATIONAL BANK IN CHICAGO HEIGHTS AS TRUSTEE UNDER TRUST AGREEMENT DATED JANUARY 3, 1969 KNOWN AS TRUST NO. 1059	3 & 5	23 ED 19
1P80004	~~HEATHER R. IWANUS AS TO AN UNDIVIDED 50% INTEREST AND ANGELA R. WOJCIECHOWSKI, AS TO AN UNDIVIDED 50% INTEREST AS TENANTS IN COMMON~~ RD & GJ, LLC	3 & 5	R2024017870

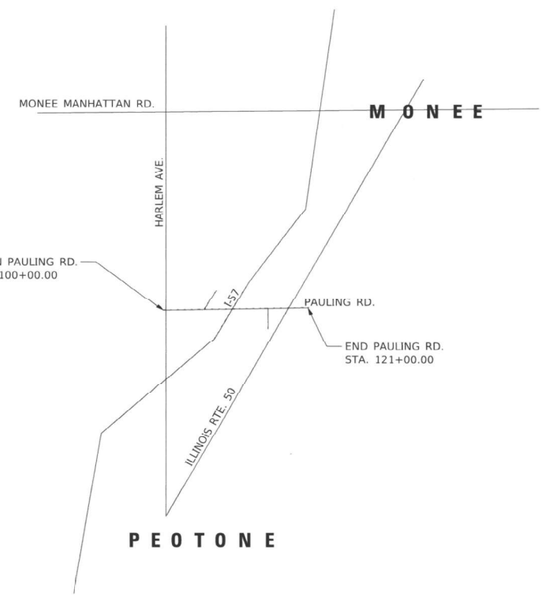

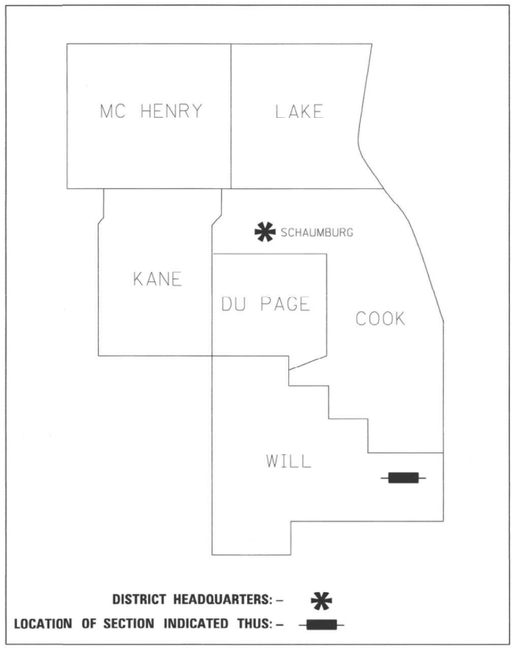

PRINTED BY THE AUTHORITY OF THE STATE OF ILLINOIS

LOCATION MAP

PAULING RD. GROSS LENGTH = 2100 FT. = 0.40 MILE

Ruettiger, Tonelli & Associates, Inc.
Surveyors • Engineers • Planners • Landscape Architects • G.I.S. Consultants
129 CAPISTA DRIVE - SHOREWOOD, ILLINOIS 60404
PH (815) 744-6600 FAX (815) 744-0101
website: www.ruettigertonelli.com

R.T. & A. Dwg. No.: 2022-0324.00

IDOT USE ONLY

MODEL: Default
FILE NAME: pw:\\atlas-pw.bentley.com:atlas-pw-01\Documents\Projects\1001\001 CV 008\003\10 CAD\3_Sheets\04 Roadway\D160R76-Int-ROW Plan.dgn

AEG ATLAS ENGINEERING GROUP, LTD.	USER NAME = astrashimirov	DESIGNED - AGS	REVISED -	STATE OF ILLINOIS DEPARTMENT OF TRANSPORTATION	PLAT OF HIGHWAY I–57 AT PAULING ROAD
		DRAWN - AGS	REVISED -		
	PLOT SCALE = 100.0000 ' / in.	CHECKED - BA	REVISED -		
	PLOT DATE = 3/20/2025	DATE - 03/06/2024	REVISED -		SCALE: N.T.S. SHEET 1 OF 5 SHEETS STA. TO STA.

F.A.I. RTE.	SECTION	COUNTY	TOTAL SHEETS	SHEET NO.
57	99-1HB-2-BR	WILL	133	22
		CONTRACT NO. 60R76		
	ILLINOIS	FED. AID PROJECT		

PART OF THE SE.1/4 OF SECTION 30 AND PART OF THE NE.1/4 OF SECTION 31, TWP. 34N., R. 13E. OF THE 3RD. P.M., IN WILL COUNTY, ILLINOIS.

PROJECT COORDINATES
ILLINOIS STATE PLANE, EAST ZONE, NAD83 (2011)
PROPOSED CENTERLINE, PAULING ROAD

PT#	STATION	OFFSET	NORTH	EAST
32	115+18.50	-3.20	1723654.360	1139718.380
CP75	104+22.11	-16.77	1723650.266	1138621.916
1000	N/A	N/A	1723609.535	1137065.616
1015	105+00.79	37.60	1723597.171	1138701.462
1016	108+21.97	75.32	1723564.633	1139023.209
1058	103+50.00	-2.28	1723634.618	1138550.050
1800	103+50.00	-42.28	1723674.612	1138549.405
1801	105+67.05	-65.78	1723701.604	1138766.049
1802	103+50.00	37.72	1723594.624	1138550.694
1803	107+99.94	112.52	1723527.087	1139001.783
2000	105+00.64	-42.40	1723677.157	1138700.020
9000	100+00.00	0.00	1723626.705	1138200.132
9004	107+36.13	444.67	1723193.944	1138943.325
9005	110+00.10	0.00	1723642.811	1139200.100
9007	105+96.65	0.00	1723636.314	1138796.707
9008	106+50.97	-99.24	1723736.420	1138849.423
9010	107+75.83	-300.21	1723939.372	1138971.022

SEE SHEET 4 FOR TOTAL HOLDING DIAGRAM OF PARCEL 1P80001

EXIST. CURVE C1
PI STA. = 12+31.53
Δ = 6° 27' 59" (RT)
D = 2° 43' 54"
R = 2,097.45'
T = 118.48'
L = 236.72'
E = 3.34'
e = ____
T.R. = ____
S.E. RUN = ____
P.C. STA. = 11+13.05
P.T. STA. = 13+49.77

LEGEND

SECTION CORNER
QUARTER SECTION CORNER
SECTION / QUARTER SECTION LINE
PLATTED LOT LINES
PROPERTY (DEED) LINE
APPARENT PROPERTY LINE
EXISTING CENTERLINE
PROPOSED CENTERLINE
EXISTING RIGHT OF WAY LINE
PROPOSED RIGHT OF WAY LINE
EXISTING EASEMENT
PROPOSED EASEMENT
EXISTING ACCESS CONTROL LINE
PROPOSED ACCESS CONTROL LINE
MEASURED DIMENSION
COMPUTED DIMENSION
RECORDED DIMENSION
EXISTING BUILDING

GRAPHIC SCALE FEET
SCALE: 1"=50'

IRON PIPE OR ROD FOUND
CUT CROSS FOUND OR SET
"MAG" NAIL SET
5 / 8" REBAR SET

STAKING OF PROPOSED RIGHT OF WAY. SET DIVISION OF HIGHWAYS SURVEY MARKER TO MONUMENT THE POSITION SHOWN. IDENTIFIED BY INSCRIPTION DATA AND SURVEYORS REGISTRATION NUMBER.

STAKING OF PROPOSED RIGHT OF WAY IN CULTIVATED AREAS. BURIED 5/8 INCH METAL ROD 20 INCHES BELOW GROUND TO MARK FUTURE SURVEYOR MARKER POSITION IDENTIFIED BY COLORED PLASTIC CAP BEARING SURVEYORS REGISTRATION NUMBER.

PERMANENT SURVEY MARKER, I.D.O.T. STANDARD 667101 02 (TO BE SET BY OTHERS)

RIGHT OF WAY STAKING PROPOSED TO BE SET

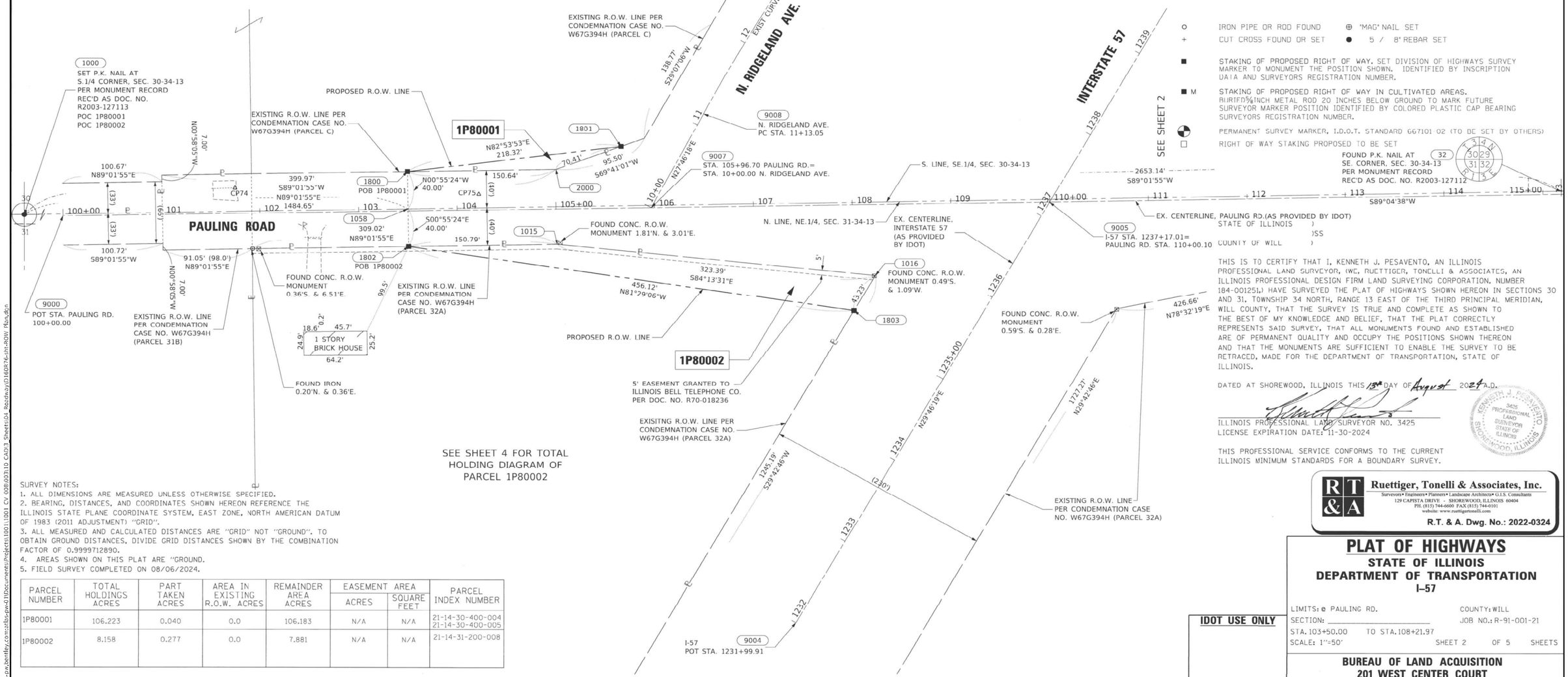

SEE SHEET 4 FOR TOTAL HOLDING DIAGRAM OF PARCEL 1P80002

SURVEY NOTES:
1. ALL DIMENSIONS ARE MEASURED UNLESS OTHERWISE SPECIFIED.
2. BEARING, DISTANCES, AND COORDINATES SHOWN HEREON REFERENCE THE ILLINOIS STATE PLANE COORDINATE SYSTEM, EAST ZONE, NORTH AMERICAN DATUM OF 1983 (2011 ADJUSTMENT) "GRID".
3. ALL MEASURED AND CALCULATED DISTANCES ARE "GRID" NOT "GROUND". TO OBTAIN GROUND DISTANCES, DIVIDE GRID DISTANCES SHOWN BY THE COMBINATION FACTOR OF 0.9999712890.
4. AREAS SHOWN ON THIS PLAT ARE "GROUND.
5. FIELD SURVEY COMPLETED ON 08/06/2024.

PARCEL NUMBER	TOTAL HOLDINGS ACRES	PART TAKEN ACRES	AREA IN EXISTING R.O.W. ACRES	REMAINDER AREA ACRES	EASEMENT AREA ACRES	EASEMENT AREA SQUARE FEET	PARCEL INDEX NUMBER
1P80001	106.223	0.040	0.0	106.183	N/A	N/A	21-14-30-400-004 21-14-30-400-005
1P80002	8.158	0.277	0.0	7.881	N/A	N/A	21-14-31-200-008

STATE OF ILLINOIS)
)SS
COUNTY OF WILL)

THIS IS TO CERTIFY THAT I, KENNETH J. PESAVENTO, AN ILLINOIS PROFESSIONAL LAND SURVEYOR, (WC, RUETTIGER, TONELLI & ASSOCIATES, AN ILLINOIS PROFESSIONAL DESIGN FIRM LAND SURVEYING CORPORATION, NUMBER 184-001251,) HAVE SURVEYED THE PLAT OF HIGHWAYS SHOWN HEREON IN SECTIONS 30 AND 31, TOWNSHIP 34 NORTH, RANGE 13 EAST OF THE THIRD PRINCIPAL MERIDIAN, WILL COUNTY, THAT THE SURVEY IS TRUE AND COMPLETE AS SHOWN TO THE BEST OF MY KNOWLEDGE AND BELIEF, THAT THE PLAT CORRECTLY REPRESENTS SAID SURVEY, THAT ALL MONUMENTS FOUND AND ESTABLISHED ARE OF PERMANENT QUALITY AND OCCUPY THE POSITIONS SHOWN THEREON AND THAT THE MONUMENTS ARE SUFFICIENT TO ENABLE THE SURVEY TO BE RETRACED, MADE FOR THE DEPARTMENT OF TRANSPORTATION, STATE OF ILLINOIS.

DATED AT SHOREWOOD, ILLINOIS THIS 13th DAY OF August 2024 A.D.

ILLINOIS PROFESSIONAL LAND SURVEYOR NO. 3425
LICENSE EXPIRATION DATE: 11-30-2024

THIS PROFESSIONAL SERVICE CONFORMS TO THE CURRENT ILLINOIS MINIMUM STANDARDS FOR A BOUNDARY SURVEY.

KENNETH J. PESAVENTO 3425 PROFESSIONAL LAND SURVEYOR STATE OF ILLINOIS SHOREWOOD, ILLINOIS

Ruettiger, Tonelli & Associates, Inc.
Surveyors • Engineers • Planners • Landscape Architects • G.I.S. Consultants
129 CAPISTA DRIVE - SHOREWOOD, ILLINOIS 60404
PH. (815) 744-6600 FAX (815) 744-6101
website: www.ruettigertonelli.com

R.T. & A. Dwg. No.: 2022-0324

PLAT OF HIGHWAYS
STATE OF ILLINOIS
DEPARTMENT OF TRANSPORTATION
I-57

LIMITS: @ PAULING RD.
SECTION: _____
STA. 103+50.00 TO STA. 108+21.97
SCALE: 1"=50'
COUNTY: WILL
JOB NO.: R-91-001-21
SHEET 2 OF 5 SHEETS

IDOT USE ONLY

REVISION DATE: __/__/____ REVISION MADE BY: _____

BUREAU OF LAND ACQUISITION
201 WEST CENTER COURT
SCHAUMBURG, ILLINOIS 60196

MODEL: Default
FILE NAME: pw:\\atlas-pw.bentley.com:atlas-pw-01\Documents\Projects\1001\001 CV 008\003\10 CAD\3 Sheets\04 Roadway\D160R76-sht-ROW Plan.dgn

AEG ATLAS ENGINEERING GROUP, LTD.	USER NAME = astrashimirov	DESIGNED - AGS	REVISED -
		DRAWN - AGS	REVISED -
	PLOT SCALE = 100.0000 ' / in.	CHECKED - BA	REVISED -
	PLOT DATE = 3/20/2025	DATE - 03/06/2024	REVISED -

STATE OF ILLINOIS
DEPARTMENT OF TRANSPORTATION

PLAT OF HIGHWAY
I-57 AT PAULING ROAD

SCALE: N.T.S. | SHEET 2 OF 5 SHEETS | STA. TO STA.

F.A.I. RTE.	SECTION	COUNTY	TOTAL SHEETS	SHEET NO.
57	99-1HB-2-BR	WILL	133	23
		CONTRACT NO. 60R76		
	ILLINOIS	FED. AID PROJECT		

PART OF THE SE.1/4 OF SECTION 30 AND PART OF THE SW. FRACTIONAL 1/4 OF SECTION 29, TWP. 34N., R. 13E. OF THE 3RD. P.M., IN WILL COUNTY, ILLINOIS.

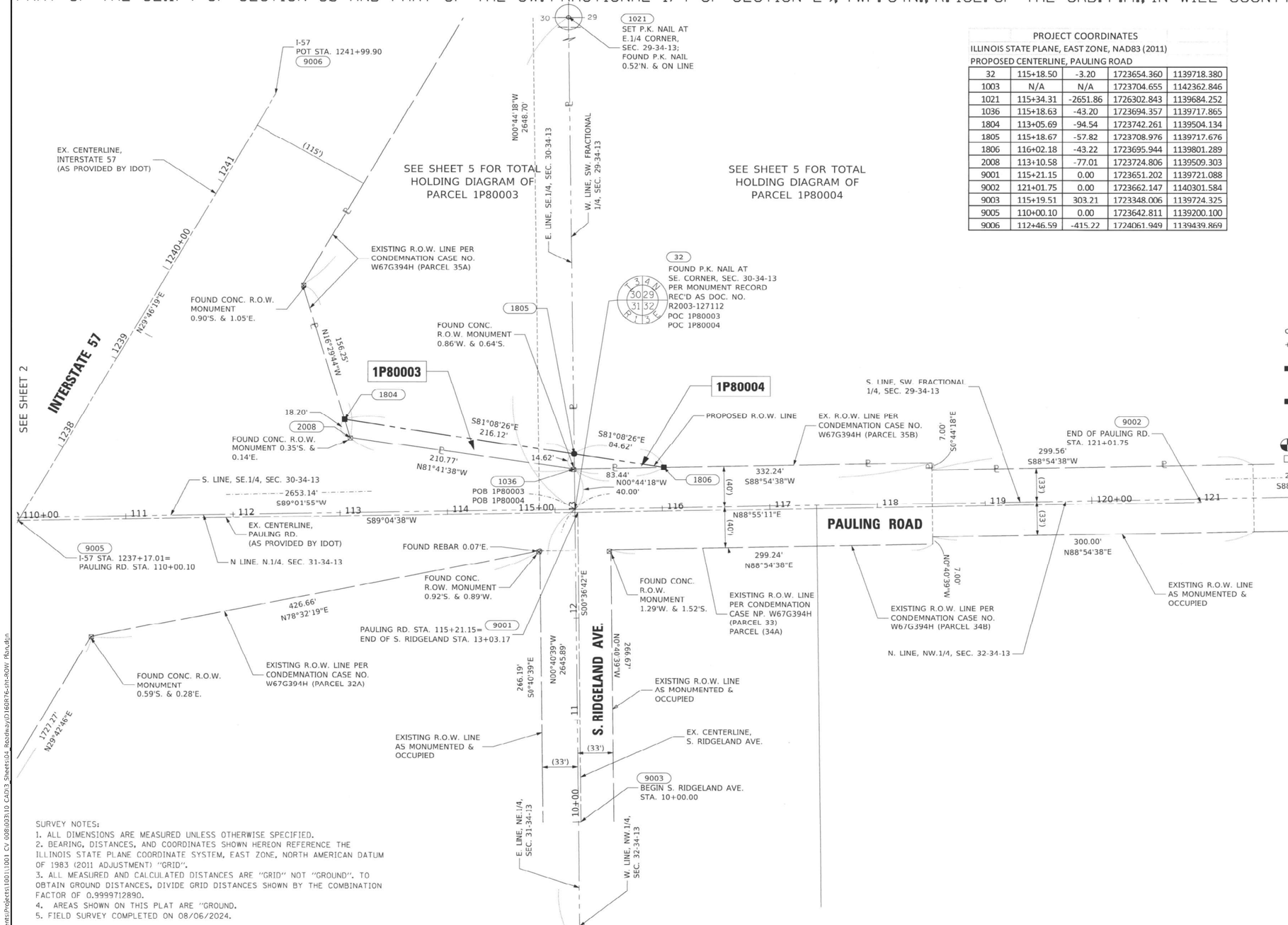

PROJECT COORDINATES
ILLINOIS STATE PLANE, EAST ZONE, NAD83 (2011)
PROPOSED CENTERLINE, PAULING ROAD

32	115+18.50	-3.20	1723654.360	1139718.380
1003	N/A	N/A	1723704.655	1142362.846
1021	115+34.31	-2651.86	1726302.843	1139684.252
1036	115+18.63	-43.20	1723694.357	1139717.865
1804	113+05.69	-94.54	1723742.261	1139504.134
1805	115+18.67	-57.82	1723708.976	1139717.676
1806	116+02.18	-43.22	1723695.944	1139801.289
2008	113+10.58	-77.01	1723724.806	1139509.303
9001	115+21.15	0.00	1723651.202	1139721.088
9002	121+01.75	0.00	1723662.147	1140301.584
9003	115+19.51	303.21	1723348.006	1139724.325
9005	110+00.10	0.00	1723642.811	1139200.100
9006	112+46.59	-415.22	1724061.949	1139439.869

LEGEND

SECTION CORNER
QUARTER SECTION CORNER

SECTION / QUARTER SECTION LINE
PLATTED LOT LINES
PROPERTY (DEED) LINE
APPARENT PROPERTY LINE
EXISTING CENTERLINE
PROPOSED CENTERLINE
EXISTING RIGHT OF WAY LINE
PROPOSED RIGHT OF WAY LINE
EXISTING EASEMENT
PROPOSED EASEMENT
EXISTING ACCESS CONTROL LINE
PROPOSED ACCESS CONTROL LINE
MEASURED DIMENSION
COMPUTED DIMENSION
RECORDED DIMENSION
EXISTING BUILDING

GRAPHIC SCALE FEET
SCALE: 1"=50'

IRON PIPE OR ROD FOUND
CUT CROSS FOUND OR SET
"MAG" NAIL SET
5 / 8" REBAR SET

STAKING OF PROPOSED RIGHT OF WAY. SET DIVISION OF HIGHWAYS SURVEY MARKER TO MONUMENT THE POSITION SHOWN. IDENTIFIED BY INSCRIPTION DATA AND SURVEYORS REGISTRATION NUMBER.

STAKING OF PROPOSED RIGHT OF WAY IN CULTIVATED AREAS. BURIED 5/8 INCH METAL ROD 20 INCHES BELOW GROUND TO MARK FUTURE SURVEYOR MARKER POSITION IDENTIFIED BY COLORED PLASTIC CAP BEARING SURVEYORS REGISTRATION NUMBER.

PERMANENT SURVEY MARKER, I.D.O.T. STANDARD 667101-02 (TO BE SET BY OTHERS)

RIGHT OF WAY STAKING PROPOSED TO BE SET

SURVEY NOTES:
1. ALL DIMENSIONS ARE MEASURED UNLESS OTHERWISE SPECIFIED.
2. BEARING, DISTANCES, AND COORDINATES SHOWN HEREON REFERENCE THE ILLINOIS STATE PLANE COORDINATE SYSTEM, EAST ZONE, NORTH AMERICAN DATUM OF 1983 (2011 ADJUSTMENT) "GRID".
3. ALL MEASURED AND CALCULATED DISTANCES ARE "GRID" NOT "GROUND". TO OBTAIN GROUND DISTANCES, DIVIDE GRID DISTANCES SHOWN BY THE COMBINATION FACTOR OF 0.9999712890.
4. AREAS SHOWN ON THIS PLAT ARE "GROUND.
5. FIELD SURVEY COMPLETED ON 08/06/2024.

PARCEL NUMBER	TOTAL HOLDINGS ACRES	PART TAKEN ACRES	AREA IN EXISTING R.O.W. ACRES	REMAINDER AREA ACRES	EASEMENT AREA ACRES	EASEMENT AREA SQUARE FEET	PARCEL INDEX NUMBER
1P80003	2.097	0.076	0.0	2.021	N/A	N/A	21-14-30-400-004
1P80004	69.190	0.014	0.0	69.176	N/A	N/A	21-14-29-300-014

STATE OF ILLINOIS)
)SS
COUNTY OF WILL)

THIS IS TO CERTIFY THAT I, KENNETH J. PESAVENTO, AN ILLINOIS PROFESSIONAL LAND SURVEYOR, (WE, RUETTIGER, TONELLI & ASSOCIATES, AN ILLINOIS PROFESSIONAL DESIGN FIRM LAND SURVEYING CORPORATION, NUMBER 184-001251,) HAVE SURVEYED THE PLAT OF HIGHWAYS SHOWN HEREON IN SECTIONS 29 AND 30, TOWNSHIP 34 NORTH, RANGE 13 EAST OF THE THIRD PRINCIPAL MERIDIAN, WILL COUNTY, THAT THE SURVEY IS TRUE AND COMPLETE AS SHOWN TO THE BEST OF MY KNOWLEDGE AND BELIEF, THAT THE PLAT CORRECTLY REPRESENTS SAID SURVEY, THAT ALL MONUMENTS FOUND AND ESTABLISHED ARE OF PERMANENT QUALITY AND OCCUPY THE POSITIONS SHOWN THEREON AND THAT THE MONUMENTS ARE SUFFICIENT TO ENABLE THE SURVEY TO BE RETRACED, MADE FOR THE DEPARTMENT OF TRANSPORTATION, STATE OF ILLINOIS.

DATED AT SHOREWOOD, ILLINOIS THIS 13TH DAY OF August 2024 A.D.

ILLINOIS PROFESSIONAL LAND SURVEYOR NO. 3425
LICENSE EXPIRATION DATE: 11-30-2024

THIS PROFESSIONAL SERVICE CONFORMS TO THE CURRENT ILLINOIS MINIMUM STANDARDS FOR A BOUNDARY SURVEY.

KENNETH J. PESAVENTO 3425 PROFESSIONAL LAND SURVEYOR STATE OF ILLINOIS SHOREWOOD, ILLINOIS

Ruettiger, Tonelli & Associates, Inc.
Surveyors • Engineers • Planners • Landscape Architects • G.I.S. Consultants
129 CAPISTA DRIVE - SHOREWOOD, ILLINOIS 60404
PH. (815) 744-6600 FAX (815) 744-0101
website: www.ruettigertonelli.com
R.T. & A. Dwg. No.: 2022-0324

PLAT OF HIGHWAYS
STATE OF ILLINOIS
DEPARTMENT OF TRANSPORTATION
I-57

LIMITS: ⊕ PAULING RD. COUNTY: WILL
SECTION: JOB NO.: R-91-001-21
STA. 113+05.69 TO STA. 116+02.18
SCALE: 1"=50' SHEET 3 OF 5 SHEETS

IDOT USE ONLY

BUREAU OF LAND ACQUISITION
201 WEST CENTER COURT
SCHAUMBURG, ILLINOIS 60196

REVISION DATE: __/__/____ REVISION MADE BY: _____

MODEL: Default
FILE NAME: pw:\\atlas-pw.bentley.com:atlas-pw-01\Documents\Projects\100111001 CV 008\003\10 CAD\3_Sheets\04_Roadway\0160876-sht-ROW Plan.dgn

AEG ATLAS ENGINEERING GROUP, LTD.	USER NAME = astrashimirov	DESIGNED - AGS	REVISED -
		DRAWN - AGS	REVISED -
	PLOT SCALE = 100.0000 ' / in.	CHECKED - BA	REVISED -
	PLOT DATE = 3/20/2025	DATE - 03/06/2024	REVISED -

STATE OF ILLINOIS
DEPARTMENT OF TRANSPORTATION

PLAT OF HIGHWAY
I-57 AT PAULING ROAD

SCALE: N.T.S. | SHEET 3 OF 5 SHEETS | STA. TO STA.

F.A.I. RTE.	SECTION	COUNTY	TOTAL SHEETS	SHEET NO.
57	99-1HB-2-BR	WILL	133	24

CONTRACT NO. 60R76
ILLINOIS FED. AID PROJECT

PART OF THE SE.1/4 OF SECTION 30 AND PART OF THE NE.1/4 OF SECTION 31, TWP. 34N., R. 13E. OF THE 3RD. P.M., IN WILL COUNTY, ILLINOIS.

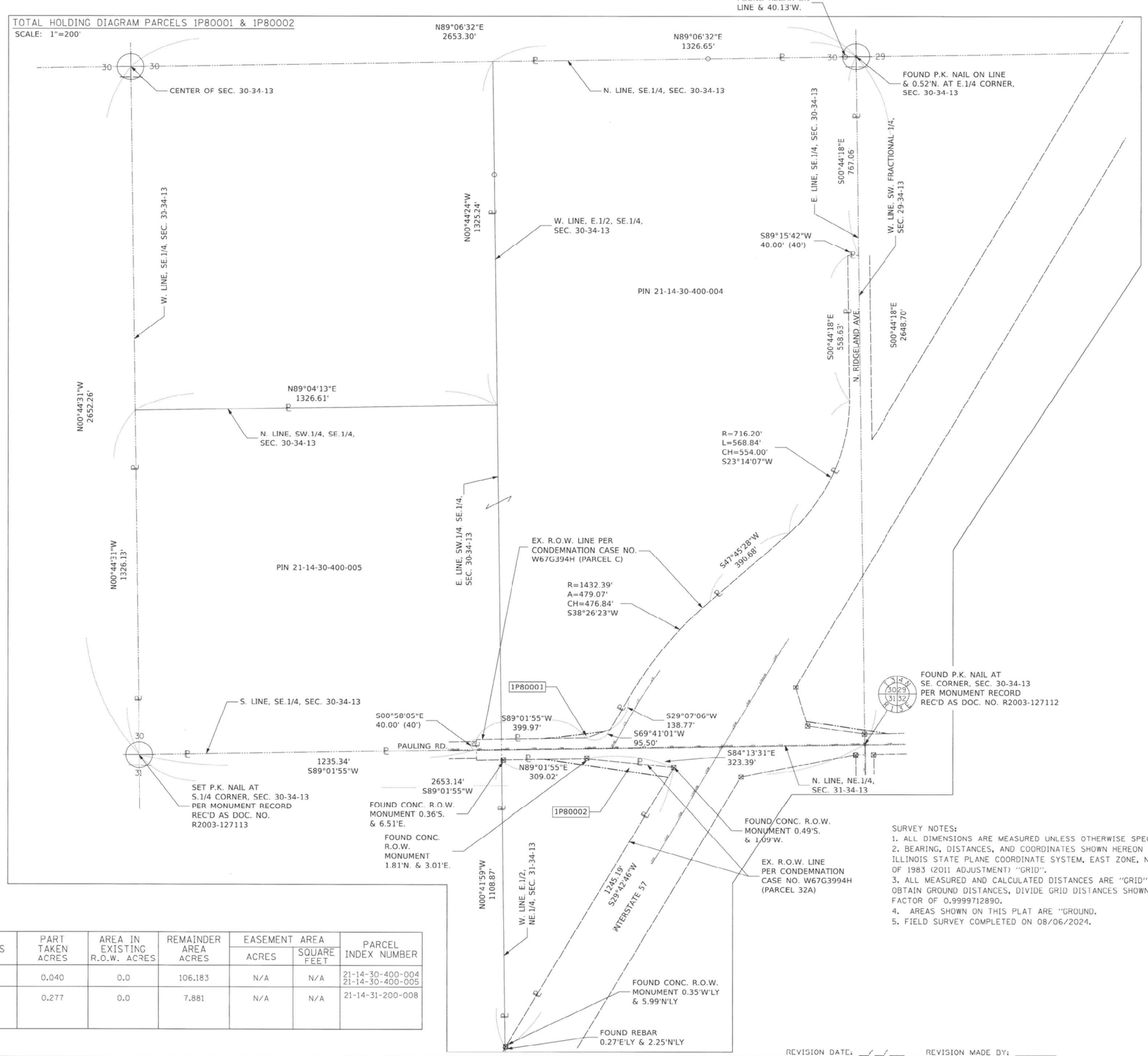

PARCEL NUMBER	TOTAL HOLDINGS ACRES	PART TAKEN ACRES	AREA IN EXISTING R.O.W. ACRES	REMAINDER AREA ACRES	EASEMENT AREA		PARCEL INDEX NUMBER
					ACRES	SQUARE FEET	
1P80001	106.223	0.040	0.0	106.183	N/A	N/A	21-14-30-400-004 21-14-30-400-005
1P80002	8.158	0.277	0.0	7.881	N/A	N/A	21-14-31-200-008

LEGEND

SECTION CORNER

QUARTER SECTION CORNER

N

GRAPHIC SCALE
FEET
0 50
SCALE: 1"=50'

- SECTION / QUARTER SECTION LINE
- PLATTED LOT LINES
- PROPERTY (DEED) LINE
- APPARENT PROPERTY LINE
- EXISTING CENTERLINE
- PROPOSED CENTERLINE
- EXISTING RIGHT OF WAY LINE
- PROPOSED RIGHT OF WAY LINE
- EXISTING EASEMENT
- PROPOSED EASEMENT
- EXISTING ACCESS CONTROL LINE
- PROPOSED ACCESS CONTROL LINE
- 129.32' — MEASURED DIMENSION
- 129.32' (COMP) — COMPUTED DIMENSION
- (129.32') — RECORDED DIMENSION
- EXISTING BUILDING

- IRON PIPE OR ROD FOUND
- CUT CROSS FOUND OR SET
- "MAG" NAIL SET
- 5 / 8" REBAR SET
- STAKING OF PROPOSED RIGHT OF WAY. SET DIVISION OF HIGHWAYS SURVEY MARKER TO MONUMENT THE POSITION SHOWN. IDENTIFIED BY INSCRIPTION DATA AND SURVEYORS REGISTRATION NUMBER.
- M STAKING OF PROPOSED RIGHT OF WAY IN CULTIVATED AREAS. BURIED 5/8 INCH METAL ROD 20 INCHES BELOW GROUND TO MARK FUTURE SURVEYOR MARKER POSITION IDENTIFIED BY COLORED PLASTIC CAP BEARING SURVEYORS REGISTRATION NUMBER.
- PERMANENT SURVEY MARKER, I.D.O.T. STANDARD 667101 02 (TO BE SET BY OTHERS)
- RIGHT OF WAY STAKING PROPOSED TO BE SET

STATE OF ILLINOIS)
)SS
COUNTY OF WILL)

THIS IS TO CERTIFY THAT I, KENNETH J. PESAVENTO, AN ILLINOIS PROFESSIONAL LAND SURVEYOR, (WE, RUETTIGER, TONELLI & ASSOCIATES, AN ILLINOIS PROFESSIONAL DESIGN FIRM LAND SURVEYING CORPORATION, NUMBER 184-001251,) HAVE SURVEYED THE PLAT OF HIGHWAYS SHOWN HEREON IN SECTIONS 30 AND 31, TOWNSHIP 34 NORTH, RANGE 13 EAST OF THE THIRD PRINCIPAL MERIDIAN, WILL COUNTY, THAT THE SURVEY IS TRUE AND COMPLETE AS SHOWN TO THE BEST OF MY KNOWLEDGE AND BELIEF, THAT THE PLAT CORRECTLY REPRESENTS SAID SURVEY, THAT ALL MONUMENTS FOUND AND ESTABLISHED ARE OF PERMANENT QUALITY AND OCCUPY THE POSITIONS SHOWN THEREON AND THAT THE MONUMENTS ARE SUFFICIENT TO ENABLE THE SURVEY TO BE RETRACED, MADE FOR THE DEPARTMENT OF TRANSPORTATION, STATE OF ILLINOIS.

DATED AT SHOREWOOD, ILLINOIS THIS 3rd DAY OF August 2024 A.D.

ILLINOIS PROFESSIONAL LAND SURVEYOR NO. 3425
LICENSE EXPIRATION DATE: 11-30-2024

KENNETH J. PESAVENTO 3425 PROFESSIONAL LAND SURVEYOR STATE OF ILLINOIS SHOREWOOD, ILLINOIS

THIS PROFESSIONAL SERVICE CONFORMS TO THE CURRENT ILLINOIS MINIMUM STANDARDS FOR A BOUNDARY SURVEY.

SURVEY NOTES:
1. ALL DIMENSIONS ARE MEASURED UNLESS OTHERWISE SPECIFIED.
2. BEARING, DISTANCES, AND COORDINATES SHOWN HEREON REFERENCE THE ILLINOIS STATE PLANE COORDINATE SYSTEM, EAST ZONE, NORTH AMERICAN DATUM OF 1983 (2011 ADJUSTMENT) "GRID".
3. ALL MEASURED AND CALCULATED DISTANCES ARE "GRID" NOT "GROUND". TO OBTAIN GROUND DISTANCES, DIVIDE GRID DISTANCES SHOWN BY THE COMBINATION FACTOR OF 0.9999712890.
4. AREAS SHOWN ON THIS PLAT ARE "GROUND.
5. FIELD SURVEY COMPLETED ON 08/06/2024.

R T & A
Ruettiger, Tonelli & Associates, Inc.
Surveyors • Engineers • Planners • Landscape Architects • GIS Consultants
129 CAPISTA DRIVE - SHOREWOOD, ILLINOIS 60404
PH. (815) 744-6600 FAX (815) 744-0101
website: www.ruettigertonelli.com

R.T. & A. Dwg. No.: 2022-0324

PLAT OF HIGHWAYS
STATE OF ILLINOIS
DEPARTMENT OF TRANSPORTATION
I-57

LIMITS: @ PAULING RD. COUNTY: WILL
SECTION: _____ JOB NO.: R-91-001-21
STA. _____ TO STA. _____
SCALE: 1"=50' SHEET 4 OF 5 SHEETS

IDOT USE ONLY

REVISION DATE: __/__/____ REVISION MADE BY: _____

BUREAU OF LAND ACQUISITION
201 WEST CENTER COURT
SCHAUMBURG, ILLINOIS 60196

MODEL: Default
FILE NAME: pw:\\atlas-pw.bentley.com:atlas-pw-01\Documents\Projects\1001\001 CV 008\003\10 CAD\3 Sheets\04 Roadway\D160R76-int-ROW Plat.dgn

AEG ATLAS ENGINEERING GROUP, LTD.

USER NAME = astrashimirov	DESIGNED - AGS	REVISED -	
	DRAWN - AGS	REVISED -	
PLOT SCALE = 100.0000 ' / in.	CHECKED - BA	REVISED -	
PLOT DATE = 3/20/2025	DATE - 03/06/2024	REVISED -	

STATE OF ILLINOIS
DEPARTMENT OF TRANSPORTATION

PLAT OF HIGHWAY
I-57 AT PAULING ROAD

SCALE: N.T.S. SHEET 4 OF 5 SHEETS STA. TO STA.

F.A.I. RTE.	SECTION	COUNTY	TOTAL SHEETS	SHEET NO.
57	99-1HB-2-BR	WILL	133	25
		CONTRACT NO. 60R76		
	ILLINOIS	FED. AID PROJECT		

PART OF THE SE.1/4 OF SECTION 30 AND PART OF THE NW.1/4 & SW. FRACTIONAL 1/4 OF SECTION 29, TWP. 34N., R. 13E. OF THE 3RD. P.M., IN WILL COUNTY, ILLINOIS.

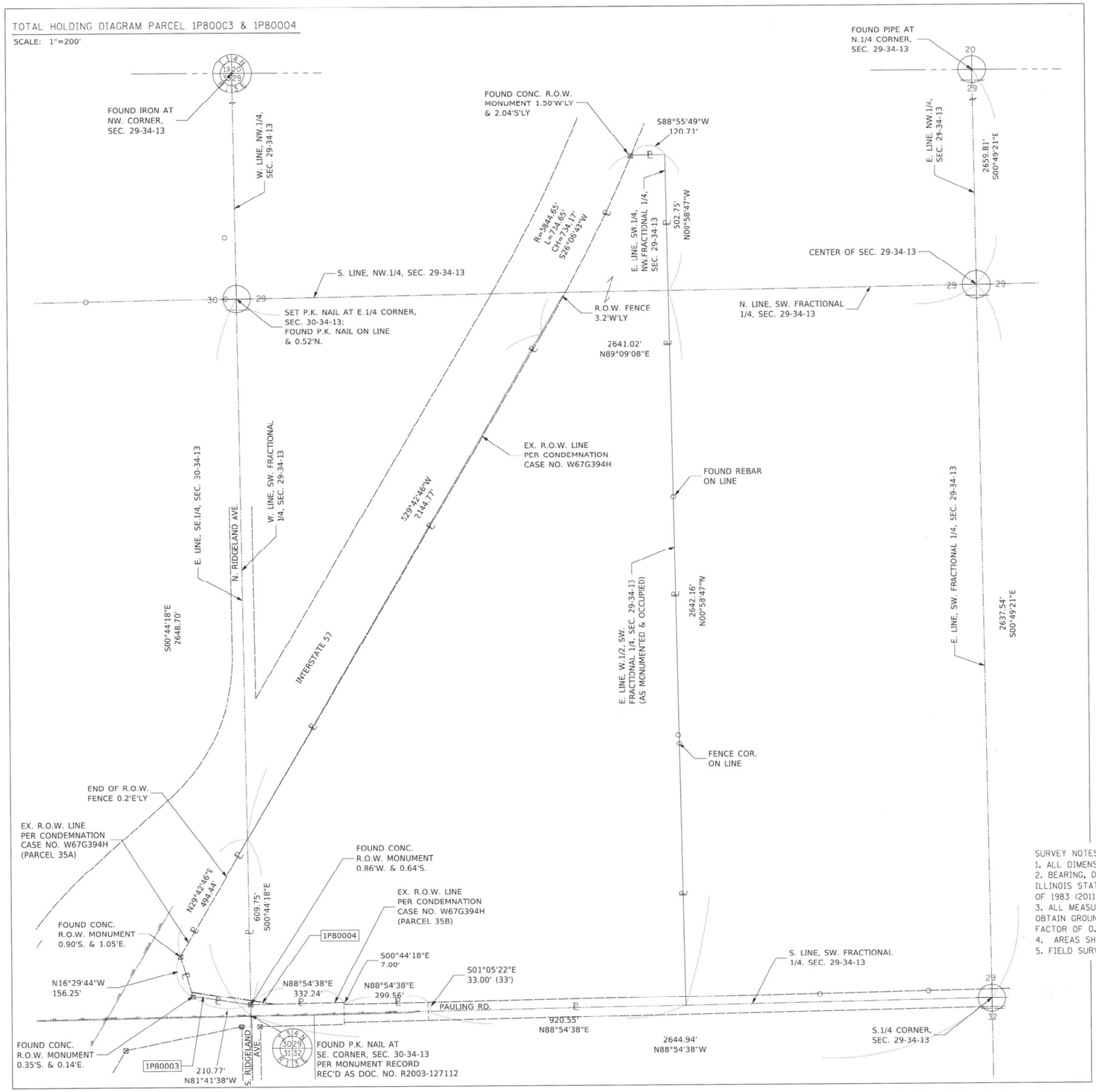

LEGEND

SECTION CORNER

QUARTER SECTION CORNER

SECTION / QUARTER SECTION LINE
PLATTED LOT LINES
PROPERTY (DEED) LINE
APPARENT PROPERTY LINE
EXISTING CENTERLINE
PROPOSED CENTERLINE
EXISTING RIGHT OF WAY LINE
PROPOSED RIGHT OF WAY LINE
EXISTING EASEMENT
PROPOSED EASEMENT
EXISTING ACCESS CONTROL LINE
PROPOSED ACCESS CONTROL LINE
129.32' MEASURED DIMENSION
129.32' (COMP) COMPUTED DIMENSION
(129.32') RECORDED DIMENSION
EXISTING BUILDING

GRAPHIC SCALE FEET
SCALE: 1"=50'

IRON PIPE OR ROD FOUND
CUT CROSS FOUND OR SET
"MAG" NAIL SET
5 / 8" REBAR SET

STAKING OF PROPOSED RIGHT OF WAY. SET DIVISION OF HIGHWAYS SURVEY MARKER TO MONUMENT THE POSITION SHOWN. IDENTIFIED BY INSCRIPTION DATA AND SURVEYORS REGISTRATION NUMBER.

M STAKING OF PROPOSED RIGHT OF WAY IN CULTIVATED AREAS. BURIED 5/8 INCH METAL ROD 20 INCHES BELOW GROUND TO MARK FUTURE SURVEYOR MARKER POSITION IDENTIFIED BY COLORED PLASTIC CAP BEARING SURVEYORS REGISTRATION NUMBER.

PERMANENT SURVEY MARKER, I.D.O.T. STANDARD 667101-02 (TO BE SET BY OTHERS)

RIGHT OF WAY STAKING PROPOSED TO BE SET

PARCEL NUMBER	TOTAL HOLDINGS ACRES	PART TAKEN ACRES	AREA IN EXISTING R.O.W. ACRES	REMAINDER AREA ACRES	EASEMENT AREA ACRES	EASEMENT AREA SQUARE FEET	PARCEL INDEX NUMBER
1P80003	2.097	0.076	0.0	2.021	N/A	N/A	21-14-30-400-004
1P80004	69.190	0.014	0.0	69.176	N/A	N/A	21-14-29-300-014

STATE OF ILLINOIS)
)SS
COUNTY OF WILL)

THIS IS TO CERTIFY THAT I, KENNETH J. PESAVENTO, AN ILLINOIS PROFESSIONAL LAND SURVEYOR. (WE, RUETTIGER, TONELLI & ASSOCIATES, AN ILLINOIS PROFESSIONAL DESIGN FIRM LAND SURVEYING CORPORATION, NUMBER 184-001251,) HAVE SURVEYED THE PLAT OF HIGHWAYS SHOWN HEREON IN SECTIONS 29 AND 30, TOWNSHIP 34 NORTH, RANGE 13 EAST OF THE THIRD PRINCIPAL MERIDIAN, WILL COUNTY, THAT THE SURVEY IS TRUE AND COMPLETE AS SHOWN TO THE BEST OF MY KNOWLEDGE AND BELIEF, THAT THE PLAT CORRECTLY REPRESENTS SAID SURVEY, THAT ALL MONUMENTS FOUND AND ESTABLISHED ARE OF PERMANENT QUALITY AND OCCUPY THE POSITIONS SHOWN THEREON AND THAT THE MONUMENTS ARE SUFFICIENT TO ENABLE THE SURVEY TO BE RETRACED. MADE FOR THE DEPARTMENT OF TRANSPORTATION, STATE OF ILLINOIS.

DATED AT SHOREWOOD, ILLINOIS THIS 31st DAY OF August 2024 A.D.

ILLINOIS PROFESSIONAL LAND SURVEYOR NO. 3425
LICENSE EXPIRATION DATE: 11-30-2024

THIS PROFESSIONAL SERVICE CONFORMS TO THE CURRENT ILLINOIS MINIMUM STANDARDS FOR A BOUNDARY SURVEY.

KENNETH J. PESAVENTO 3425 PROFESSIONAL LAND SURVEYOR STATE OF ILLINOIS SHOREWOOD, ILLINOIS

SURVEY NOTES:
1. ALL DIMENSIONS ARE MEASURED UNLESS OTHERWISE SPECIFIED.
2. BEARING, DISTANCES, AND COORDINATES SHOWN HEREON REFERENCE THE ILLINOIS STATE PLANE COORDINATE SYSTEM, EAST ZONE, NORTH AMERICAN DATUM OF 1983 (2011 ADJUSTMENT) "GRID".
3. ALL MEASURED AND CALCULATED DISTANCES ARE "GRID" NOT "GROUND". TO OBTAIN GROUND DISTANCES, DIVIDE GRID DISTANCES SHOWN BY THE COMBINATION FACTOR OF 0.9999712890.
4. AREAS SHOWN ON THIS PLAT ARE "GROUND.
5. FIELD SURVEY COMPLETED ON 08/06/2024.

RT&A Ruettiger, Tonelli & Associates, Inc.
Surveyors • Engineers • Planners • Landscape Architects • G.I.S. Consultants
129 CAPISTA DRIVE - SHOREWOOD, ILLINOIS 60404
PH. (815) 744-6600 FAX (815) 744-0101
website: www.ruettigertonelli.com

R.T. & A. Dwg. No.: 2022-0324

PLAT OF HIGHWAYS
STATE OF ILLINOIS
DEPARTMENT OF TRANSPORTATION
I-57

IDOT USE ONLY

LIMITS: @ PAULING RD. COUNTY: WILL
SECTION: _____ JOB NO.: R-91-001-21
STA. _____ TO STA. _____
SCALE: 1"=50' SHEET 5 OF 5 SHEETS

BUREAU OF LAND ACQUISITION
201 WEST CENTER COURT
SCHAUMBURG, ILLINOIS 60196

MODEL: Default
FILE NAME: pw:\\atlas-pw.bentley.com:atlas-pw-01\Documents\Projects\1001\1001 CV 008\003\10 CAD\3 Sheets\04 Roadway\0160876-sht-ROW Plan.dgn

AEG ATLAS ENGINEERING GROUP, LTD.

USER NAME = astrashimirov	DESIGNED - AGS	REVISED -	
	DRAWN - AGS	REVISED -	
PLOT SCALE = 100.0000 ' / in.	CHECKED - BA	REVISED -	
PLOT DATE = 3/20/2025	DATE - 03/06/2024	REVISED -	

STATE OF ILLINOIS
DEPARTMENT OF TRANSPORTATION

PLAT OF HIGHWAY
I-57 AT PAULING ROAD

SCALE: N.T.S. SHEET 5 OF 5 SHEETS STA. TO STA.

F.A.I. RTE.	SECTION	COUNTY	TOTAL SHEETS	SHEET NO.
57	99-1HB-2-BR	WILL	133	26

CONTRACT NO. 60R76
ILLINOIS FED. AID PROJECT

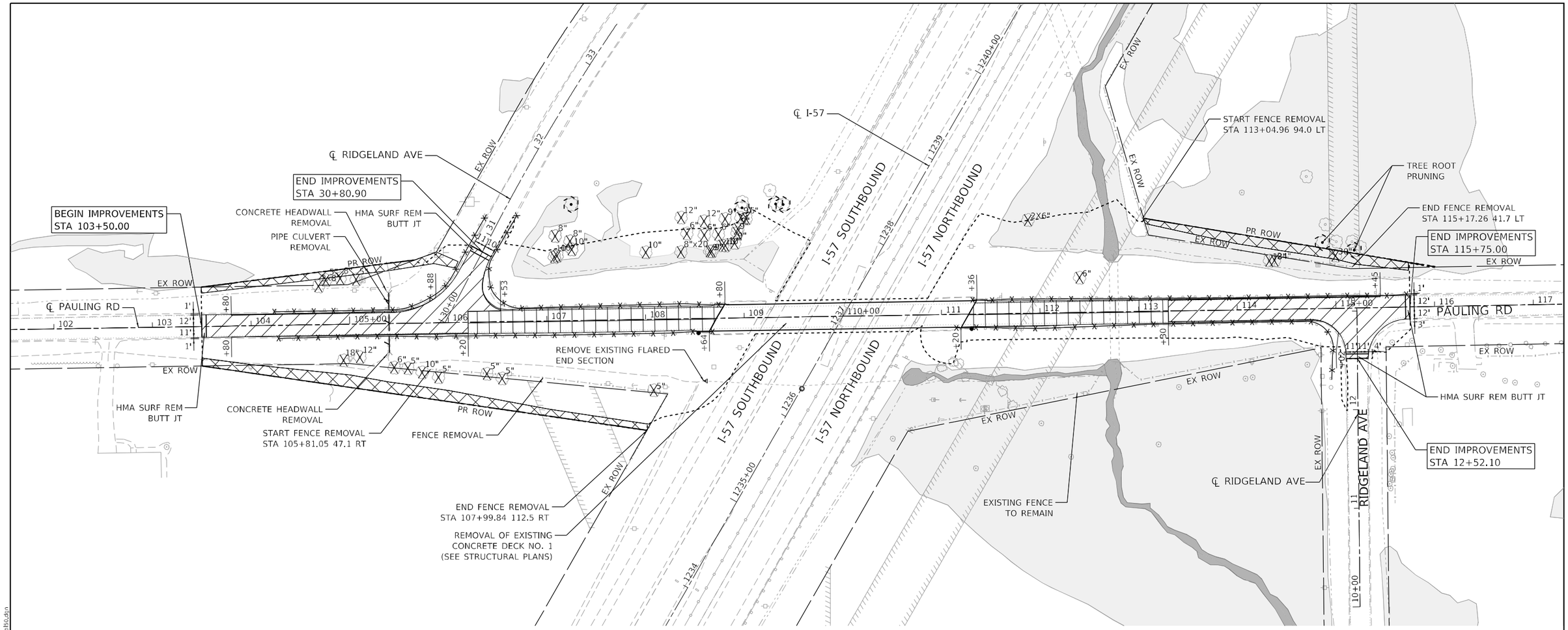

LEGEND

- HOT-MIX ASPHALT SURFACE REMOVAL, 2 1/4" (44000158)
- PAVEMENT REMOVAL (44000100)
- SELECTIVE CLEARING (X2010516)
- EXISTING WETLANDS
- EXISTING WOUS
- GUARDRAIL REMOVAL (63200310)
- TREE REMOVAL
- TREE TRUNK PROTECTION (20101100)
- LIMITS OF CONSTRUCTION

N

0 50 100 150
SCALE IN FEET

MODEL: Default
FILE NAME: pw:\\atlas-pw.bentley.com:atlas-pw-01\Documents\Projects\100\1001 CV 008\003\10 CAD\3 Sheets\04 Roadway\D160R76-Removal50.dgn

AEG ATLAS ENGINEERING GROUP, LTD.	USER NAME = cpujari	DESIGNED - CVP	REVISED -
		DRAWN - CVP	REVISED -
	PLOT SCALE = 100.0000 ' / in.	CHECKED - BA	REVISED -
	PLOT DATE = 3/7/2025	DATE - 03/06/2024	REVISED -

STATE OF ILLINOIS
DEPARTMENT OF TRANSPORTATION

REMOVAL PLAN
I-57 AT PAULING ROAD

SCALE: 1" = 50' | SHEET 1 OF 1 SHEETS | STA. TO STA.

F.A.I. RTE.	SECTION	COUNTY	TOTAL SHEETS	SHEET NO.
57	99-1HB-2-BR	WILL	133	27
		CONTRACT NO. 60R76		
		ILLINOIS	FED. AID PROJECT	

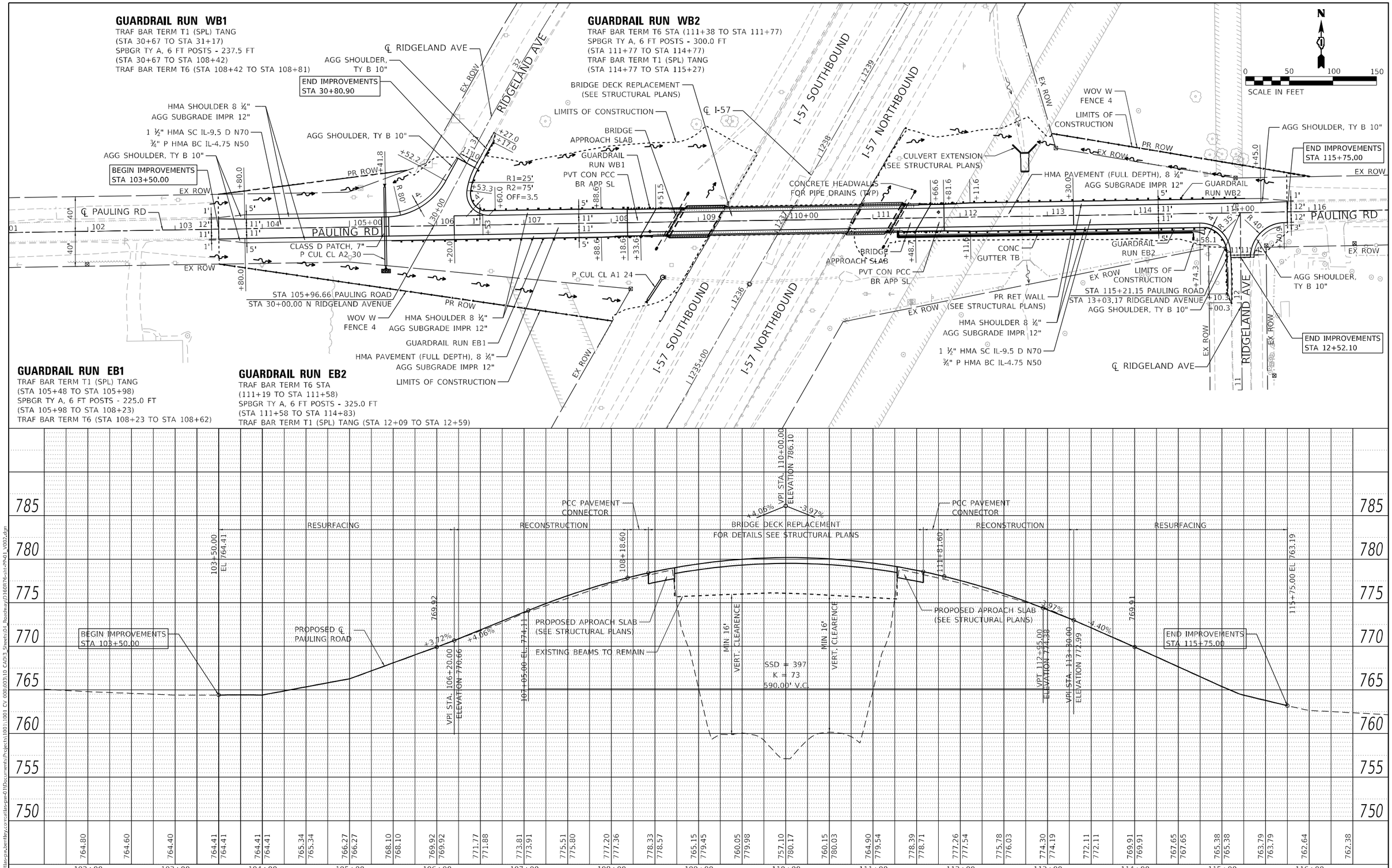

AEG ATLAS ENGINEERING GROUP, LTD.	USER NAME = cpujari	DESIGNED - CVP	REVISED -
		DRAWN - CVP	REVISED -
	PLOT SCALE = 100.0000 ' / in.	CHECKED - BA	REVISED -
	PLOT DATE = 3/7/2025	DATE - 03/06/2024	REVISED -

STATE OF ILLINOIS
DEPARTMENT OF TRANSPORTATION

PLAN AND PROFILE
I-57 AT PAULING ROAD

SCALE: 1" = 50' | SHEET 1 OF 2 SHEETS | STA. TO STA.

F.A.I. RTE.	SECTION	COUNTY	TOTAL SHEETS	SHEET NO.
57	99-1HB-2-BR	WILL	133	28
		CONTRACT NO. 60R76		
		ILLINOIS	FED. AID PROJECT	

MODEL: Default
FILE NAME: pw:\\atlas-pw.bentley.com:atlas-pw-01\Documents\Projects\1001\1001 CV 008\003\10 CAD\3_Sheets\04_Roadway\D160R76-sht-PP-01_V002.dgn

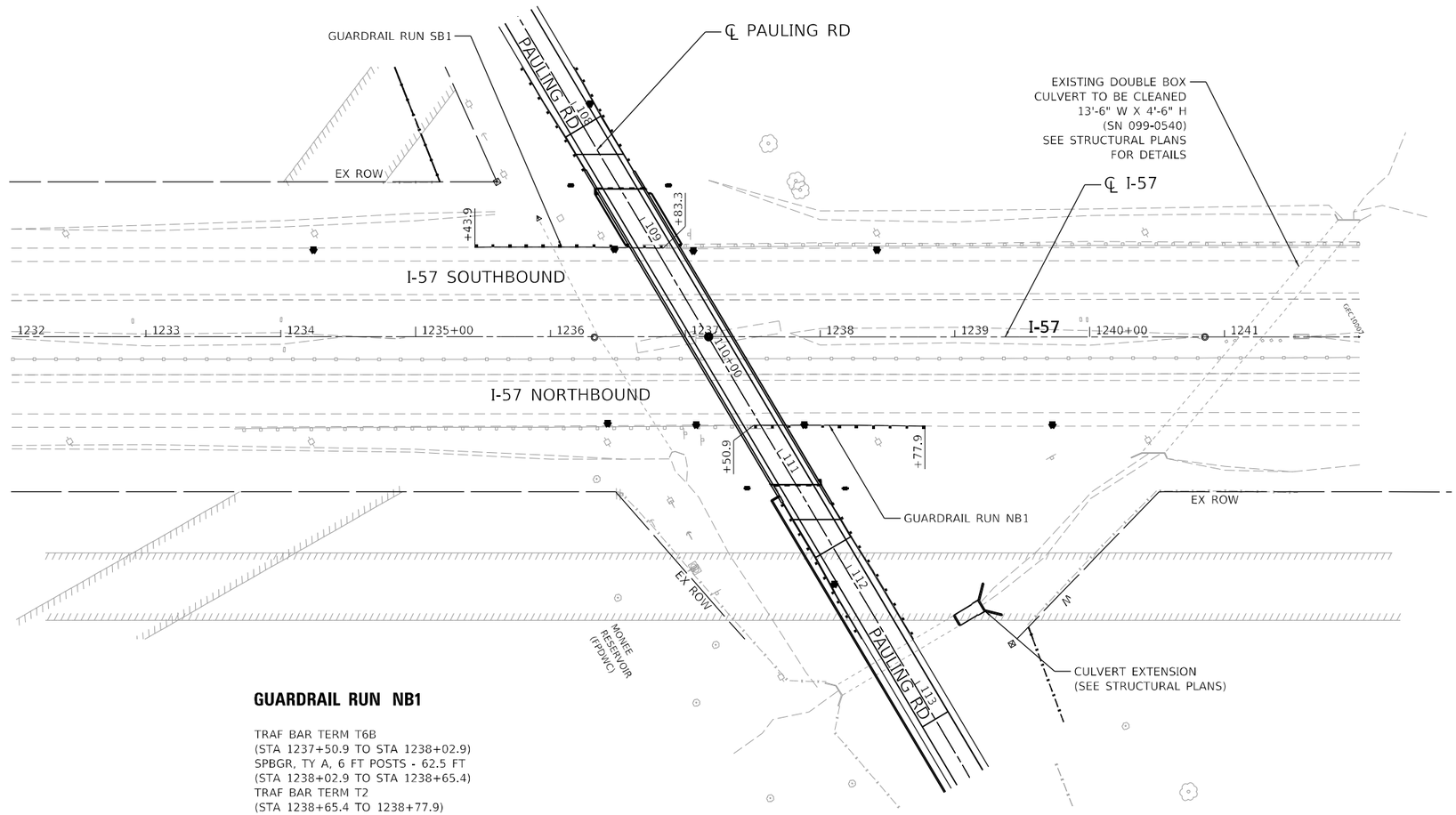

GUARDRAIL RUN SB1

TRAF BAR TERM T2
(STA 1235+43.9 TO STA 1235+56.4)
SPBGR, TY A, 6 FT POSTS - 75 FT
(STA 1235+56.4 TO STA 1236+31.4)
TRAF BAR TERM T6B
(STA 1236+31.4 TO 1236+83.3)

GUARDRAIL RUN NB1

TRAF BAR TERM T6B
(STA 1237+50.9 TO STA 1238+02.9)
SPBGR, TY A, 6 FT POSTS - 62.5 FT
(STA 1238+02.9 TO STA 1238+65.4)
TRAF BAR TERM T2
(STA 1238+65.4 TO 1238+77.9)

MODEL: Default
FILE NAME: pw:\\atlas-pw.bentley.com:atlas-pw-01\Documents\Projects\1001 CV 008.003\10 CADD\3-Sheets\04 Roadway\D160R76-Rt-Roy01_Profile1_50xcalc.dgn

AEG ATLAS ENGINEERING GROUP, LTD.	USER NAME = cpujari	DESIGNED - CVP	REVISED -	STATE OF ILLINOIS DEPARTMENT OF TRANSPORTATION	ROADWAY PLAN I-57 I-57 AT PAULING ROAD	F.A.I. RTE.	SECTION	COUNTY	TOTAL SHEETS	SHEET NO.
		DRAWN - CVP	REVISED -			57	99-1HB-2-BR	WILL	133	29
	PLOT SCALE = 100.0000 ' / in.	CHECKED - BA	REVISED -					CONTRACT NO. 60R76		
	PLOT DATE = 3/7/2025	DATE - 03/06/2024	REVISED -		SCALE: 1" = 50' SHEET 2 OF 2 SHEETS STA. TO STA.		ILLINOIS	FED. AID PROJECT		

EROSION AND SEDIMENT CONTROL NOTES

1. ALL EROSION AND SEDIMENT CONTROL MEASURES WILL BE MAINTAINED IN ACCORDANCE WITH THE IDOT EROSION AND SEDIMENT CONTROL FIELD GUIDE FOR CONSTRUCTION INSPECTION FOUND ON THE CONSTRUCTION TAB AT: HTTPS://IDOT.ILLINOIS.GOV/CONTENT/DAM/SOI/EN/WEB/IDOT/DOCUMENTS/TRANSPORTATION-SYSTEM/MANUALS-GUIDES-AND-HANDBOOKS/HIGHWAYS/ENVIRONMENT/EROSION-AND-SEDIMENT-CONTROL-FIELD-GUIDE-FOR-CONSTRUCTION-INSPECTION.PDF

2. THE CONTRACTOR WILL ASSUME THE RESPONSIBILITY FOR MAINTENANCE OF ALL SOIL EROSION CONTROL DURING CONSTRUCTION.

3. THE CONTRACTOR SHALL CHECK ALL ESC MEASURES WEEKLY AND AFTER EACH RAINFALL, 0.5 INCHES OR GREATER IN A 24 HOUR PERIOD, OR EQUIVALENT SNOWFALL. DURING WINTER MONTHS, ALL MEASURES SHOULD BE CHECKED BY THE CONTRACTOR AFTER EACH SIGNIFICANT SNOWMELT.

4. THE CONTRACTOR SHALL PROVIDE THE RESIDENT ENGINEER A PLAN TO ENSURE THAT A STABILIZED FLOW LINE WILL BE PROVIDED DURING STORM SEWER CONSTRUCTION. THE USE OF STABILIZED FLOW LINE BETWEEN INSTALLED STORM SEWER AN DOPEN DISTURBANCE WILL REDUCE THE POTENTIAL FOR THE OFFSITE DISCHARGE OF SEDIMENT-BEARING WATERS, ESPECIALLY WHEN THE RAIN IS FORECASTED, SO THAT FLOW WILL NOT ERODE. LACK OF APPROVEED PLAN OR FAILURE TO COMPLY WILL RESULT IN AN ESC DEFICIENCY DEDUCTION.

5. ANY LOOSE MATERIAL DEPOSITED IN THE FLOW LINE OF DRAINAGE STRUCTURES, WHICH OBSTRUCTS THE NATURAL FLOW OF WATER, SHALL BE REMOVED AT THE CLOSE OF EACH WORKING DAY. PRIOR TO ACCEPTANCE OF THE IMPROVEMENT, ALL DRAINAGE STRUCTURES SHALL BE FREE OF DIRT AND DEBRIS. THIS WORK WILL NOT BE PAID FOR SEPARATELY BUT SHALL BE CONSIDERED AS INCIDENTAL.

6. TEMPORARY OR PERMANENT STABILIZATION SHALL BE INITIATED IMMEDIATELY UPON COMPLETION OF DISTURBANCE OR IF THE WORK AREA IS TO BE LEFT UNDISTURBED FOR 14 DAYS OR MORE.

7. UNDER NO CIRCUMSTANCES SHALL THE CONTRACTOR PROLONG FINAL GRADING AND SHAPING SO THAT THE ENTIRE PROJECT CAN BE PERMANENTLY SEEDED AT ONE TIME.

8. EROSION CONTROL ITEMS ARE CONSIDERED TO BE A HIGH PRIORITY ON THIS CONTRACT. THE CONTRACTOR IS RESPONSIBLE FOR INSTALLATION OF ANY ADDITIONAL EROSION CONTROL MEASURES NECESSARY TO PREVENT EROSION AND SEDIMENTATION AS DETERMINED BY THE RESIDENT ENGINEER.

9. "THIS PROJECT REQUIRES A US ARMY CORPS OF ENGINEERS (USACE) 404 PERMIT THAT WILL BE SECURED BY THE DEPARTMENT. ALL CONDITIONS OF THE 404 PERMIT, FOUND IN THE SPECIAL PROVISIONS, MUST BE FOLLOWED. AS A CONDITION OF THIS PERMIT, THE CONTRACTOR WILL NEED TO SUBMIT AN IN-STREAM WORK PLAN (INCLUDING WORK WITHIN WETLANDS) TO THE DEPARTMENT FOR APPROVAL. GUIDELINES ON ACCEPTABLE IN-STREAM WORK TECHNIQUES (INCLUDING WORK WITHIN WETLANDS) CAN BE FOUND ON THE USACE WEBSITE. THE USACE DEFINES AND DETERMINES IN-STREAM WORK. THE COST OF ALL MATERIALS AND LABOR NECESSARY TO COMPLY WITH THE ABOVE PROVISIONS TO PREPARE AND IMPLEMENT AN IN-STREAM WORK PLAN (INCLUDING WORK WITHIN WETLANDS) WILL NOT BE PAID FOR SEPARATELY, BUT SHALL BE CONSIDERED AS INCLUDED IN THE UNIT BID PRICES OF THE CONTRACT AND NO ADDITIONAL COMPENSATION WILL BE ALLOWED WITH THE EXCEPTION OF COFFERDAMS, WHICH WILL BE PAID FOR AS COFFERDMAN (TYPE 1) (IN-STREAM/WETLAND WORK) WITH A BASIS OF PAYMENT OF EACH ."

10. "WETLAND NO INTRUSION" SIGNAGE SHOULD ALSO BE PROVIDED AT THE BOUNDRY OF ALL UNIMPACTED WETLANDS AND/OR WOUS. THE CONTRACTOR CAN BORROW THE SIGNS FROM THE BUREAU OF MAINTENANCE. THE COST OF THE SIGNAGE WILL NOT BE PAID FOR SEPARATELY, BUT SHALL BE CONSIDERED AS INCLUDED IN THE UNIT BID PRICES OF THE CONTRACT AND NO ADDITIONAL COMPENSATION WILL BE ALLOWED.

BEGIN IMPROVEMENTS
STA 103 + 50.00

END IMPROVEMENTS
STA 115 + 75.00

PAULING RD
RIDGELAND AVE
I-57 SOUTHBOUND
I-57 NORTHBOUND
C\L DITCH
4' DITCH
PR ROW
EX ROW
COFFERDAM (TYPE I)
(IN STREAM/WETLAND WORK)

LEGEND

- TEMPORARY EROSION CONTROL SEEDING (28000250)
- TEMPORARY EROSION CONTROL SEEDING (28000250) EROSION CONTROL BLANKET (25100630)
- PERIMETER EROSION BARRIER (28000400)
- TEMPORARY DITCH CHECKS (28000305)
- EXISTING WETLANDS
- EXISTING WOUS
- WETLAND NO INTRUSION SIGN
- WOVEN WIRE FENCE, 4'
- PROPOSED ROW
- EXISTING ROW

N

0 50 100 150
SCALE IN FEET

MODEL: Default
FILE NAME: pw:\\atlas-pw.bentley.com:atlas-pw-01\Documents\Projects\1001\1001 CV 008\003\10 CADD\3 Sheets\06 ErosionControl\D F60R76-sht-ErosionControl.dgn

AEG ATLAS ENGINEERING GROUP, LTD.	USER NAME = cpujari	DESIGNED - CVP	REVISED -
		DRAWN - CVP	REVISED -
	PLOT SCALE = 100.0000 ' / in.	CHECKED - BA	REVISED -
	PLOT DATE = 3/7/2025	DATE - 03/06/2024	REVISED -

STATE OF ILLINOIS
DEPARTMENT OF TRANSPORTATION

EROSION CONTROL PLANS
I-57 AT PAULING ROAD

SCALE: 1" = 50' | SHEET 2 OF 2 SHEETS | STA. TO STA.

F.A.I. RTE.	SECTION	COUNTY	TOTAL SHEETS	SHEET NO.
57	99-1HB-2-BR	WILL	133	31
		CONTRACT NO. 60R76		
	ILLINOIS	FED. AID PROJECT		

STRUCTURE NO.	STA.	OFFSET FT	STRUCTURE TYPE	RIM/EOP	INVERTS	
S1-1	105+41	48.0' LT	CONCRETE END SECTION, STANDARD 542001, 30", 1:3 (54261330) TRAVERSABLE PIPE GRATE FOR CONCRETE END SECTION		757.38 30" S	
S1-2	105+41	49.0' RT	CONCRETE END SECTION, STANDARD 542001, 30", 1:3 (54261330) TRAVERSABLE PIPE GRATE FOR CONCRETE END SECTION		756.52 30" N	
S1-3	108+38	92.4' RT	CONCRETE END SECTION, STANDARD 542001, 24", 1:3 (54261324)		753.90 24" N	
S1-4	108+58	63.3' RT	MANHOLES, TYPE A, 5'-DIAMETER, TYPE 1 FRAME, CLOSED LID (60221100)	760.54	753.65 EX 24" E	753.65 24" S

PIPE NO.	FROM	TO	PIPE TYPE	LENGTH FT	SLOPE %	TRENCH BACKFILL CU YD
P1-1	S1-1	S1-2	PIPE CULVERT, CLASS A, TYPE 2 30" (542A1075)	74.0	0.89%	71.0
P1-2	S1-3	S1-4	PIPE CULVERT, CLASS A, TYPE 1 24" (542A0229)	20.0	1.25%	0.0

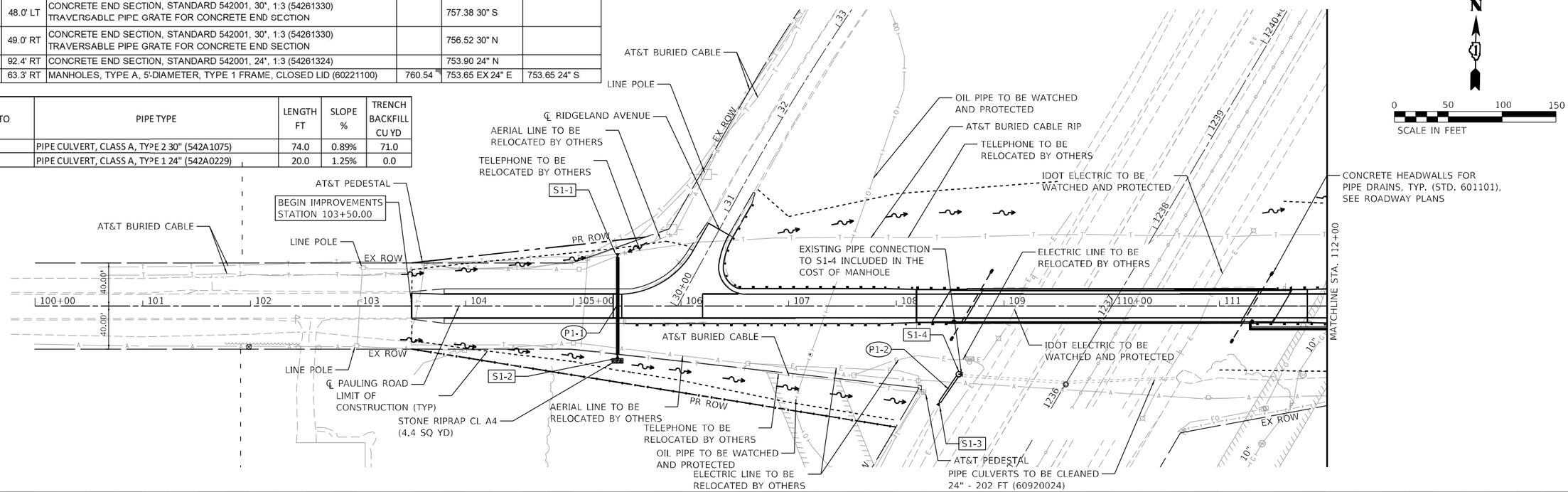

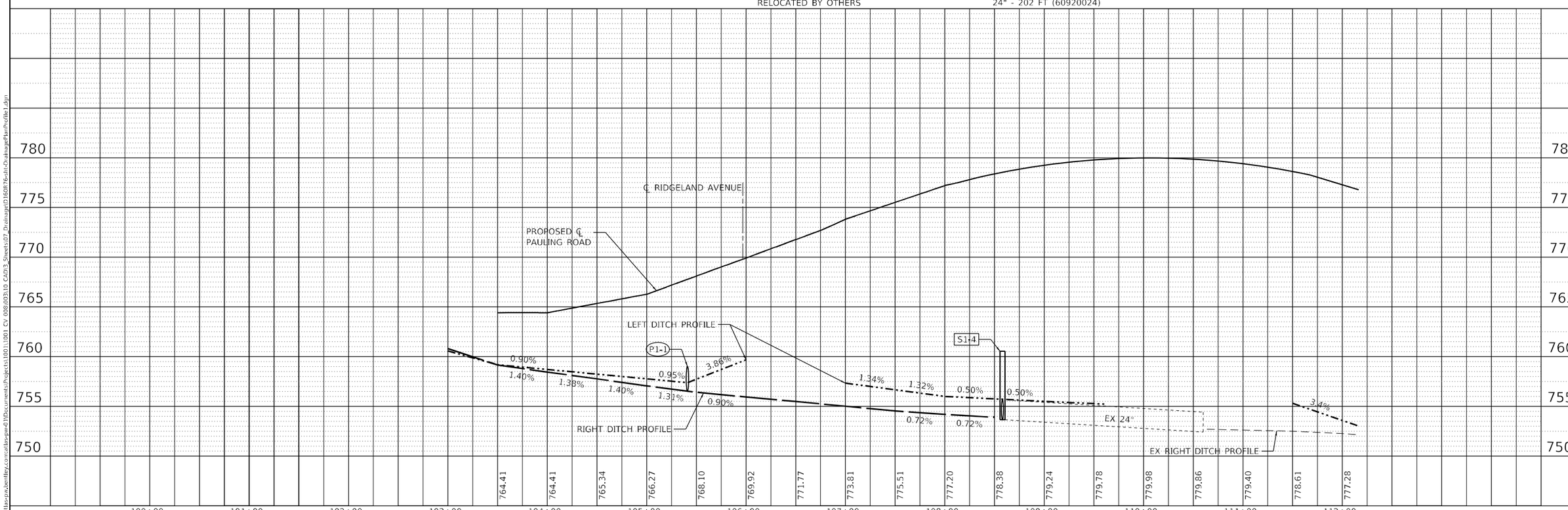

PLAN — SURVEYED / PLOTTED / ALIGNMENT CHECKED / R.O.W. CHECKED / CADD FILE NAME / NOTE BOOK NO. / BY / DATE

PROFILE — SURVEYED / PLOTTED / GRADES CHECKED / B.M. NOTED / STRUCTURE NOTATIONS CHKD / NOTE BOOK NO. / BY / DATE

MODEL: Default
FILE NAME: pw:\\atlas-pw.bentley.com:atlas-pw-01\Documents\Projects\1001\1001 CV 008\003\10 CAD\3_Sheets\07_Drainage\D160R76-sht-DrainagePlanProfile1.dgn

BAXTER & WOODMAN Consulting Engineers

USER NAME = cpujari	DESIGNED - AMM	REVISED -	
	DRAWN - KAR	REVISED -	
PLOT SCALE = 100.0000 ' / in.	CHECKED - FMA	REVISED -	
PLOT DATE = 3/7/2025	DATE - 03/06/2024	REVISED -	

STATE OF ILLINOIS
DEPARTMENT OF TRANSPORTATION

DRAINAGE PLAN
PAULING ROAD OVER I-57

SCALE: | SHEET 1 OF 2 SHEETS | STA. | TO STA.

F.A.I. RTE.	SECTION	COUNTY	TOTAL SHEETS	SHEET NO.
57	99-1HB-2-BR	WILL	135	32
		CONTRACT NO. 60R76		
		ILLINOIS FED. AID PROJECT		

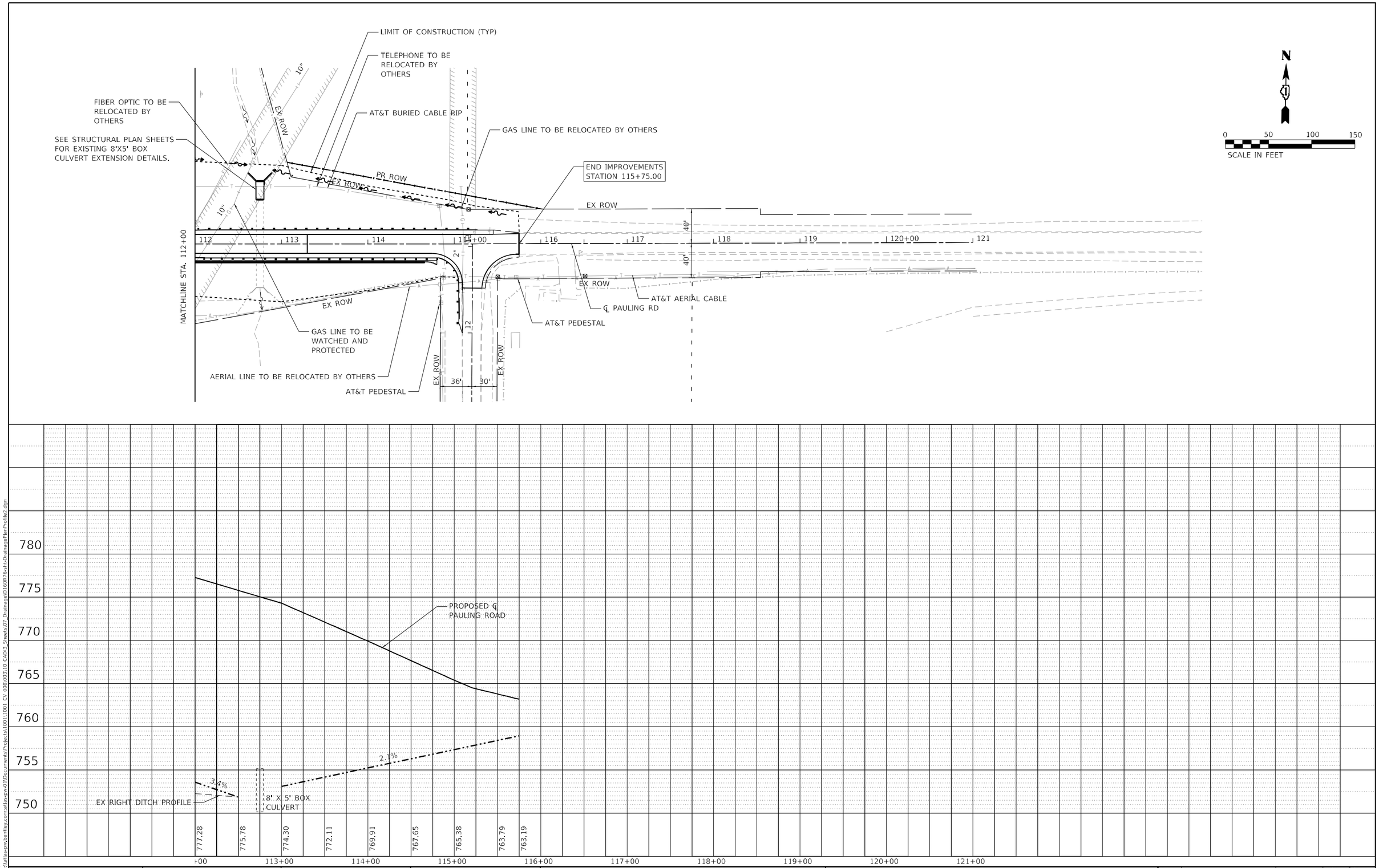

PLAN
SURVEYED
PLOTTED
ALIGNMENT CHECKED
R/W CHECKED
CADD FILE NAME
NOTE BOOK NO.
BY
DATE

PROFILE
SURVEYED
PLOTTED
GRADES CHECKED
B.M. NOTED
STRUCTURE NOTATIONS CHKD
NOTE BOOK NO.
BY
DATE

MODEL: Default
FILE NAME: pw:\\atlas-pw.bentley.com:atlas-pw-01\Documents\Projects\1001\1001 CV 008\003\10 CAD\3_Sheets\07_Drainage\D160R76-sht-DrainagePlanProfile2.dgn

BAXTER & WOODMAN Consulting Engineers

USER NAME = cpujari	DESIGNED - AMM	REVISED -
	DRAWN - KAR	REVISED -
PLOT SCALE = 100.0000 ' / in.	CHECKED - FMA	REVISED -
PLOT DATE = 3/7/2025	DATE - 03/06/2024	REVISED -

STATE OF ILLINOIS
DEPARTMENT OF TRANSPORTATION

DRAINAGE PLAN
PAULING ROAD OVER I-57

SCALE: | SHEET 2 OF 2 SHEETS | STA. | TO STA.

F.A.I. RTE.	SECTION	COUNTY	TOTAL SHEETS	SHEET NO.
57	99-1HB-2-BR	WILL	135	33
		CONTRACT NO. 60R76		
		ILLINOIS	FED. AID PROJECT	

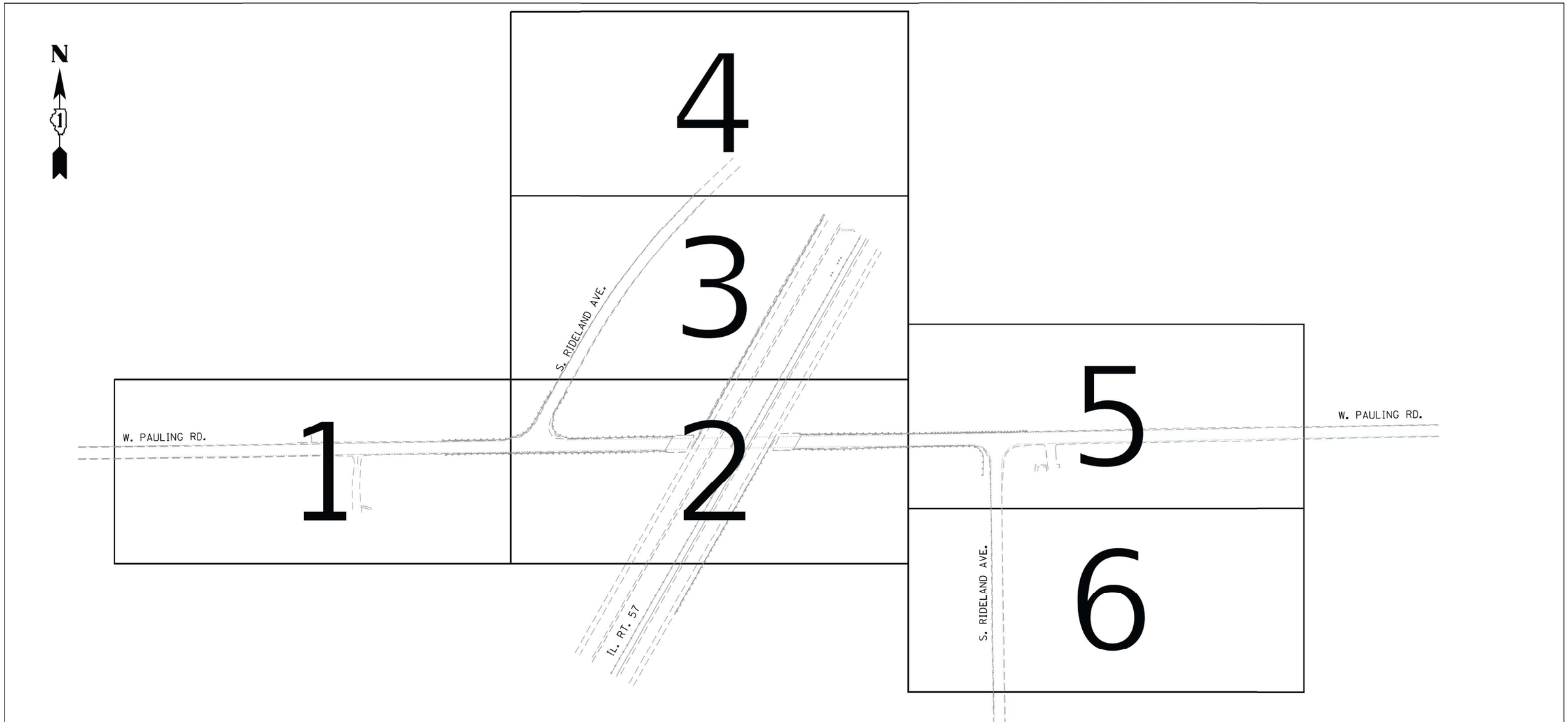

ASCE STANDARDS OF DEPICTION OF SUBSURFACE UTILITIES

QUALITY LEVEL A (QLA)
PRECISE HORIZONTAL AND VERTICAL LOCATION OF UTILITIES OBTAINED BY THE ACTUAL EXPOSURE (OR VERIFICATION OF PREVIOUSLY EXPOSED AND SURVEYED UTILITIES) USING MINIMALLY INTRUSIVE EXCAVATION EQUIPMENT TO MINIMIZE POTENTIAL FOR UTILITY DAMAGE, AND SUBSEQUENT MEASURMENT OF THE SUBSURFACE UTILITIES WITH OTHER UTILITY ATTRIBUTES SUCH AS TYPE, SIZE & MATERIAL OF UTILITY.

QUALITY LEVEL B (QLB)
INFORMATION OBTAINED THROUGH THE APPLICATION OF APPROPRIATE SURFACE GEOPHYSICAL METHODS TO DETERMINE THE EXISTENCE AND APPROXIMATE HORIZONTAL POSITION OF SUBSURFACE UTILTIES.
QUALITY LEVEL B DATA SHOULD BE REPRODUCIBLE BY SURFACE GEOPHYSICS AT ANY POINT OF THEIR DEPICTION. THIS INFORMATION IS SURVEYED TO APPLICABLE TOLERANCES DEFINED BY THE PROJECT AND REDUCED ONTO PLAN DOCUMENTS.

QUALITY LEVEL C (QLC)
INFORMATION OBTAINED BY SURVEYING AND PLOTTING VISIBLE ABOVE-GROUND UTLITY FEATURES AND BY USING PROFESSIONAL JUDGEMENT IN CORRELATING THIS INFORMATION TO QUALITY LEVEL D INFORMATION.

QUALITY LEVEL D (QLD)
INFORMATION DERIVED FROM EXISITNG RECORDS OR ORAL RECOLLECTIONS.

GENERAL NOTES:

WGI INC. HAS EXERCISED ITS BEST PROFESSIONAL EXPERTISE AND GEOPHYSICAL PROSPECTING TECHNIQUES TO DEVELOP THIS MAPPING OF SUBSURFACE UTILITIES WITHIN THE PROJECT LIMITS.

WGI INC. DOES NOT GUARANTEE THAT UTILITIES SHOWN COMPRISE ALL UTILITIES WITHIN THE PROJECT AREA.

WGI's FIELD INVESTIGATION WAS PERFORMED 07/14/2020 THROUGH 07/24/2020. CHANGES TO UTILITIES AFTER 07/24/2020 MAY HAVE BEEN MADE AND THEREFORE MAY RESULT IN VARIANCES FROM THIS PLAN IF DEEMED ADVISABLE PRIOR TO FINAL DESIGN AND CONSTRUCTION.

FIELD LOCATED UTILITIES MEET THE FEDERAL HIGHWAY ADMINISTRATION DEFINITION FOR "QUALITY LEVEL B" (QLB) STANDARDS.

UTILITY SIZE AND INFORMATION IS BASED ON BEST AVAILABLE FIELD AND RECORD INFORMATION.

ALL UTILITIES SHOWN ARE QUALITY LEVEL B (QLB) UNLESS NOTED OTHERWISE.

ALL ELECTRONIC DEPTHS PROVIDED ARE ESTIMATED APPROXIMATELY TO THE CENTER OF THE UTILITY UNLESS NOTED OTHERWISE AND SHOULD BE USED FOR INFORMATIONAL PURPOSES ONLY.

UTILITY LEGEND:

- A — *AERIAL*
- *UNKNOWN UTILITY*
- O — *OIL (PETROLEUM)*
- CTV — *CABLE TV*
- T — *TELEPHONE*
- G — *GAS*
- E — *ELECTRIC*
- E — *TRAFFIC SIGNAL/LIGHTING*
- W — *WATER*
- *FORCE MAIN*
- FO — *FIBER OPTIC*
- *TEST HOLE*
- EOI — *END OF INFORMATION*
- ED — *ELECTRONIC DEPTH*

JOHN J. BELLIS
062-044796
REGISTERED PROFESSIONAL ENGINEER OF ILLINOIS

John J. Bellis
signature

08/05/2020
date

license expires 11/30/2021

SANCHEZ
Sanchez & Associates, P.C.
8604 W. Catalpa Avenue, Suite 912
Chicago, IL 60656
Phone No. (773) 444-0144

WGI
2001 Butterfield Road, Suite 410
Downers Grove, IL 60515
Phone No. (630) 307-3800
Fax No. (630) 307-7030
Cert No. 6091 - LB No. 7055

USER NAME = Erick.Maleza	DESIGNED -	REVISED -	
	DRAWN - EM	REVISED -	
PLOT SCALE = 50.0000 ' / in.	CHECKED - EG	REVISED -	
PLOT DATE = 8/4/2020	DATE -	REVISED -	

STATE OF ILLINOIS
DEPARTMENT OF TRANSPORTATION

IL. RT. 57 AT PAULING RD.
MONEE, ILLINOIS

SCALE: | SHEET OF SHEETS | STA. TO STA.

F.A.I RTE.	SECTION	COUNTY	TOTAL SHEETS	SHEET NO.
57	99-1HB-2-BR	WILL	133	34
		CONTRACT NO. 60R76		

ILLINOIS | FED. AID PROJECT

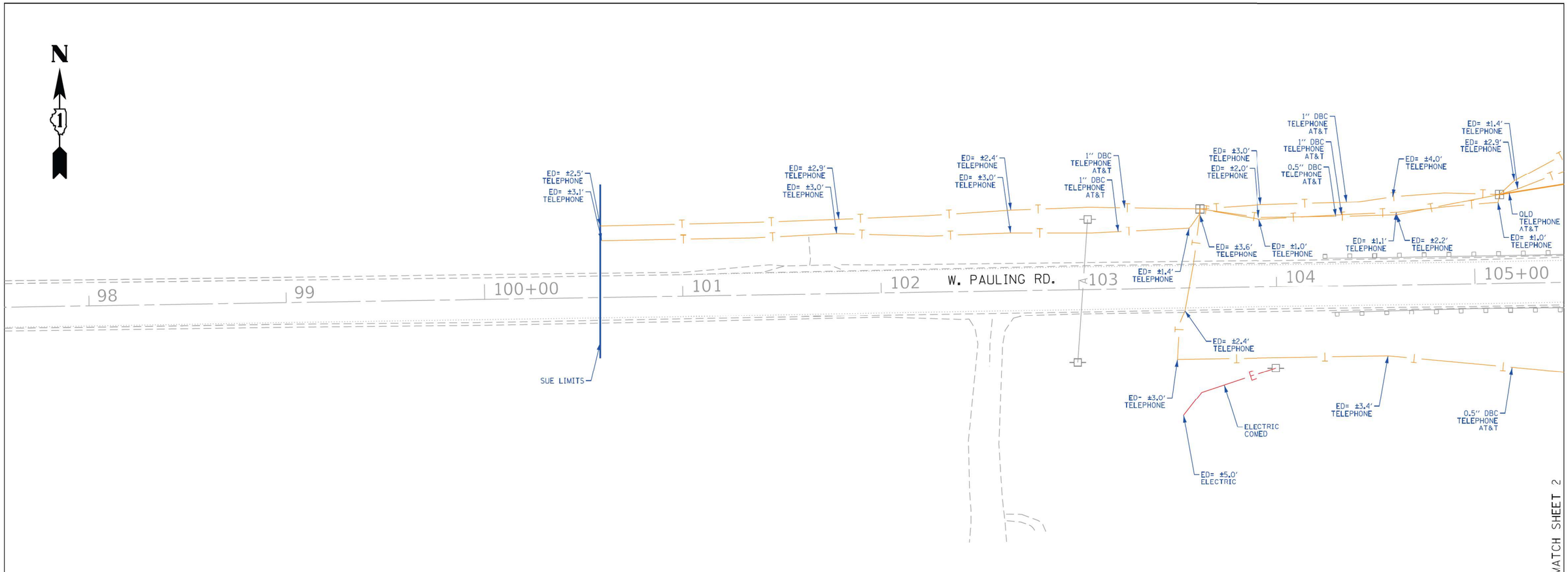

ASCE STANDARDS OF DEPICTION OF SUBSURFACE UTILITIES

QUALITY LEVEL A (QLA)
PRECISE HORIZONTAL AND VERTICAL LOCATION OF UTILITIES OBTAINED BY THE ACTUAL EXPOSURE (OR VERIFICATION OF PREVIOUSLY EXPOSED AND SURVEYED UTILITIES) USING MINIMALLY INTRUSIVE EXCAVATION EQUIPMENT TO MINIMIZE POTENTIAL FOR UTILITY DAMAGE, AND SUBSEQUENT MEASURMENT OF THE SUBSURFACE UTILITIES WITH OTHER UTILITY ATTRIBUTES SUCH AS TYPE, SIZE & MATERIAL OF UTILITY.

QUALITY LEVEL B (QLB)
INFORMATION OBTAINED THROUGH THE APPLICATION OF APPROPRIATE SURFACE GEOPHYSICAL METHODS TO DETERMINE THE EXISTENCE AND APPROXIMATE HORIZONTAL POSITION OF SUBSURFACE UTILTIES.
QUALITY LEVEL B DATA SHOULD BE REPRODUCIBLE BY SURFACE GEOPHYSICS AT ANY POINT OF THEIR DEPICTION. THIS INFORMATION IS SURVEYED TO APPLICABLE TOLERANCES DEFINED BY THE PROJECT AND REDUCED ONTO PLAN DOCUMENTS.

QUALITY LEVEL C (QLC)
INFORMATION OBTAINED BY SURVEYING AND PLOTTING VISIBLE ABOVE-GROUND UTLITY FEATURES AND BY USING PROFESSIONAL JUDGEMENT IN CORRELATING THIS INFORMATION TO QUALITY LEVEL D INFORMATION.

QUALITY LEVEL D (QLD)
INFORMATION DERIVED FROM EXISITNG RECORDS OR ORAL RECOLLECTIONS.

GENERAL NOTES:

WGI INC. HAS EXERCISED ITS BEST PROFESSIONAL EXPERTISE AND GEOPHYSICAL PROSPECTING TECHNIQUES TO DEVELOP THIS MAPPING OF SUBSURFACE UTILITIES WITHIN THE PROJECT LIMITS.

WGI INC. DOES NOT GUARANTEE THAT UTILITIES SHOWN COMPRISE ALL UTILITIES WITHIN THE PROJECT AREA.

WGI's FIELD INVESTIGATION WAS PERFORMED 07/14/2020 THROUGH 07/24/2020. CHANGES TO UTILITIES AFTER 07/24/2020 MAY HAVE BEEN MADE AND THEREFORE MAY RESULT IN VARIANCES FROM THIS PLAN IF DEEMED ADVISABLE PRIOR TO FINAL DESIGN AND CONSTRUCTION.

FIELD LOCATED UTILITIES MEET THE FEDERAL HIGHWAY ADMINISTRATION DEFINITION FOR "QUALITY LEVEL B" (QLB) STANDARDS.

UTILITY SIZE AND INFORMATION IS BASED ON BEST AVAILABLE FIELD AND RECORD INFORMATION.

ALL UTILITIES SHOWN ARE QUALITY LEVEL B (QLB) UNLESS NOTED OTHERWISE.

ALL ELECTRONIC DEPTHS PROVIDED ARE ESTIMATED APPROXIMATELY TO THE CENTER OF THE UTILITY UNLESS NOTED OTHERWISE AND SHOULD BE USED FOR INFORMATIONAL PURPOSES ONLY.

UTILITY LEGEND:

- A — AERIAL
- UNKNOWN UTILITY
- O — OIL (PETROLEUM)
- CTV — CABLE TV
- T — TELEPHONE
- G — GAS
- E — ELECTRIC
- TS — TRAFFIC SIGNAL/LIGHTING
- W — WATER
- FORCE MAIN
- FO — FIBER OPTIC
- TEST HOLE
- EOI — END OF INFORMATION
- ED — ELECTRONIC DEPTH

JOHN J. BELLIS
062-044796
REGISTERED PROFESSIONAL ENGINEER OF ILLINOIS

John J. Bellis
Signature

08/05/2020
date

license expires 11/30/2021

SANCHEZ
Sanchez & Associates, P.C.
8604 W. Catalpa Avenue, Suite 912
Chicago, IL 60656
Phone No. (773) 444-0144

WGI
2001 Butterfield Road, Suite 410
Downers Grove, IL 60515
Phone No. (630) 307-3800
Fax No. (630) 307-7030
Cert No. 6091 - LB No. 7055

USER NAME = Erick.Maleza	DESIGNED -	REVISED -	
	DRAWN - EM	REVISED -	
PLOT SCALE = 50.0000 ' / in.	CHECKED - EG	REVISED -	
PLOT DATE = 8/5/2020	DATE -	REVISED -	

STATE OF ILLINOIS
DEPARTMENT OF TRANSPORTATION

IL. RT. 57 AT PAULING RD.
MONEE, ILLINOIS

SCALE: | SHEET 1 OF 6 SHEETS | STA. TO STA.

F.A.I RTE.	SECTION	COUNTY	TOTAL SHEETS	SHEET NO.
57	99-1HB-2-BR	WILL	133	35
		CONTRACT NO. 60R76		
		ILLINOIS	FED. AID PROJECT	

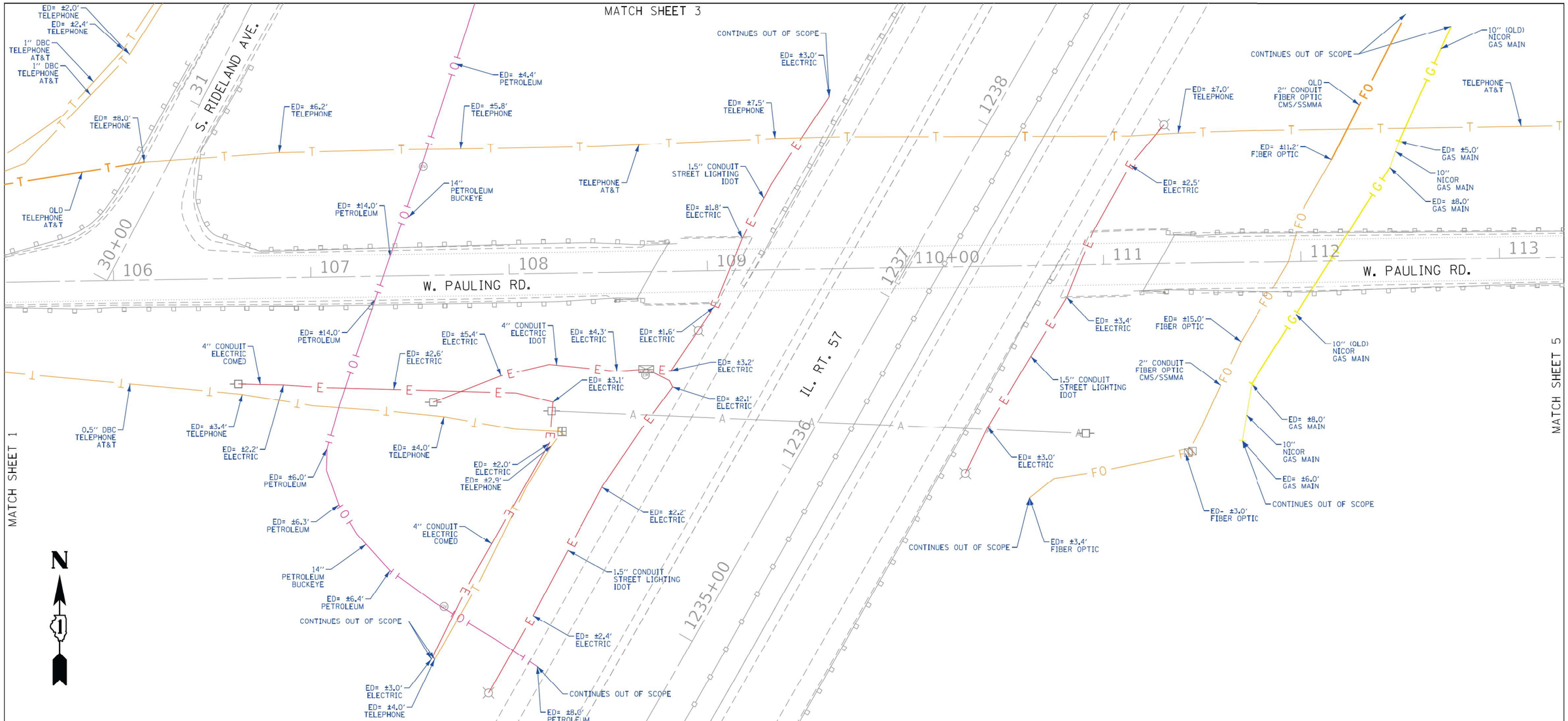

ASCE STANDARDS OF DEPICTION OF SUBSURFACE UTILITIES

QUALITY LEVEL A (QLA)
PRECISE HORIZONTAL AND VERTICAL LOCATION OF UTILITIES OBTAINED BY THE ACTUAL EXPOSURE (OR VERIFICATION OF PREVIOUSLY EXPOSED AND SURVEYED UTILITIES) USING MINIMALLY INTRUSIVE EXCAVATION EQUIPMENT TO MINIMIZE POTENTIAL FOR UTILITY DAMAGE, AND SUBSEQUENT MEASUREMENT OF THE SUBSURFACE UTILITIES WITH OTHER UTILITY ATTRIBUTES SUCH AS TYPE, SIZE & MATERIAL OF UTILITY.

QUALITY LEVEL B (QLB)
INFORMATION OBTAINED THROUGH THE APPLICATION OF APPROPRIATE SURFACE GEOPHYSICAL METHODS TO DETERMINE THE EXISTENCE AND APPROXIMATE HORIZONTAL POSITION OF SUBSURFACE UTILTIES. QUALITY LEVEL B DATA SHOULD BE REPRODUCIBLE BY SURFACE GEOPHYSICS AT ANY POINT OF THEIR DEPICTION. THIS INFORMATION IS SURVEYED TO APPLICABLE TOLERANCES DEFINED BY THE PROJECT AND REDUCED ONTO PLAN DOCUMENTS.

QUALITY LEVEL C (QLC)
INFORMATION OBTAINED BY SURVEYING AND PLOTTING VISIBLE ABOVE-GROUND UTLITY FEATURES AND BY USING PROFESSIONAL JUDGEMENT IN CORRELATING THIS INFORMATION TO QUALITY LEVEL D INFORMATION.

QUALITY LEVEL D (QLD)
INFORMATION DERIVED FROM EXISITNG RECORDS OR ORAL RECOLLECTIONS.

GENERAL NOTES:

WGI INC. HAS EXERCISED ITS BEST PROFESSIONAL EXPERTISE AND GEOPHYSICAL PROSPECTING TECHNIQUES TO DEVELOP THIS MAPPING OF SUBSURFACE UTILITIES WITHIN THE PROJECT LIMITS.

WGI INC. DOES NOT GUARANTEE THAT UTILITIES SHOWN COMPRISE ALL UTILITIES WITHIN THE PROJECT AREA.

WGI's FIELD INVESTIGATION WAS PERFORMED 07/14/2020 THROUGH 07/24/2020. CHANGES TO UTILITIES AFTER 07/24/2020 MAY HAVE BEEN MADE AND THEREFORE MAY RESULT IN VARIANCES FROM THIS PLAN IF DEEMED ADVISABLE PRIOR TO FINAL DESIGN AND CONSTRUCTION.

FIELD LOCATED UTILITIES MEET THE FEDERAL HIGHWAY ADMINISTRATION DEFINITION FOR "QUALITY LEVEL B" (QLB) STANDARDS.

UTILITY SIZE AND INFORMATION IS BASED ON BEST AVAILABLE FIELD AND RECORD INFORMATION.

ALL UTILITIES SHOWN ARE QUALITY LEVEL B (QLB) UNLESS NOTED OTHERWISE.

ALL ELECTRONIC DEPTHS PROVIDED ARE ESTIMATED APPROXIMATELY TO THE CENTER OF THE UTILITY UNLESS NOTED OTHERWISE AND SHOULD BE USED FOR INFORMATIONAL PURPOSES ONLY.

UTILITY LEGEND:

- AERIAL
- UNKNOWN UTILITY
- OIL (PETROLEUM)
- CABLE TV
- TELEPHONE
- GAS
- ELECTRIC
- TRAFFIC SIGNAL/LIGHTING
- WATER
- FORCE MAIN
- FIBER OPTIC
- TEST HOLE
- END OF INFORMATION
- ELECTRONIC DEPTH

JOHN J. BELLIS
062-044796
REGISTERED PROFESSIONAL ENGINEER OF ILLINOIS

signature

08/05/2020
date

license expires 11/30/2021

SANCHEZ
Sanchez & Associates, P.C.
8604 W. Catalpa Avenue, Suite 912
Chicago, IL 60656
Phone No. (773) 444-0144

WGI
2001 Butterfield Road, Suite 410
Downers Grove, IL 60515
Phone No. (630) 307-3800
Fax No. (630) 307-7030
Cert No. 6091 - LB No. 7055

USER NAME = Erick.Maleza	DESIGNED -	REVISED -	
	DRAWN - EM	REVISED -	
PLOT SCALE = 50.0000 ' / in.	CHECKED - EG	REVISED -	
PLOT DATE = 8/6/2020	DATE -	REVISED -	

STATE OF ILLINOIS
DEPARTMENT OF TRANSPORTATION

IL. RT. 57 AT PAULING RD.
MONEE, ILLINOIS

SCALE: | SHEET 2 OF 6 SHEETS | STA. TO STA.

F.A.I RTE.	SECTION	COUNTY	TOTAL SHEETS	SHEET NO.
57	99-1HB-2-BR	WILL	133	36
		CONTRACT NO.	60R76	
		ILLINOIS	FED. AID PROJECT	

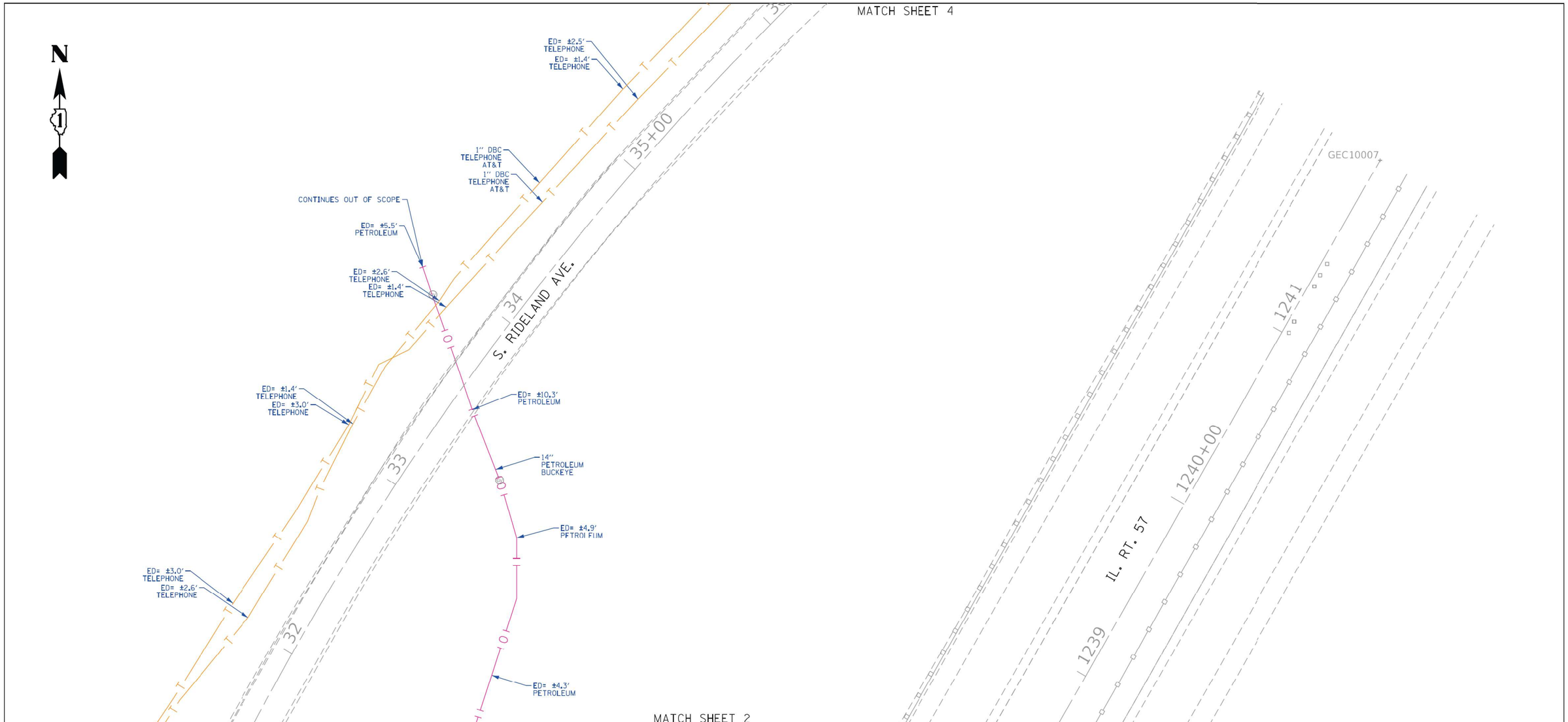

ASCE STANDARDS OF DEPICTION OF SUBSURFACE UTILITIES

QUALITY LEVEL A (QLA)
PRECISE HORIZONTAL AND VERTICAL LOCATION OF UTILITIES OBTAINED BY THE ACTUAL EXPOSURE (OR VERIFICATION OF PREVIOUSLY EXPOSED AND SURVEYED UTILITIES) USING MINIMALLY INTRUSIVE EXCAVATION EQUIPMENT TO MINIMIZE POTENTIAL FOR UTILITY DAMAGE, AND SUBSEQUENT MEASURMENT OF THE SUBSURFACE UTILITIES WITH OTHER UTILITY ATTRIBUTES SUCH AS TYPE, SIZE & MATERIAL OF UTILITY.

QUALITY LEVEL B (QLB)
INFORMATION OBTAINED THROUGH THE APPLICATION OF APPROPRIATE SURFACE GEOPHYSICAL METHODS TO DETERMINE THE EXISTENCE AND APPROXIMATE HORIZONTAL POSITION OF SUBSURFACE UTILTIES. QUALITY LEVEL B DATA SHOULD BE REPRODUCIBLE BY SURFACE GEOPHYSICS AT ANY POINT OF THEIR DEPICTION. THIS INFORMATION IS SURVEYED TO APPLICABLE TOLERANCES DEFINED BY THE PROJECT AND REDUCED ONTO PLAN DOCUMENTS.

QUALITY LEVEL C (QLC)
INFORMATION OBTAINED BY SURVEYING AND PLOTTING VISIBLE ABOVE-GROUND UTLITY FEATURES AND BY USING PROFESSIONAL JUDGEMENT IN CORRELATING THIS INFORMATION TO QUALITY LEVEL D INFORMATION.

QUALITY LEVEL D (QLD)
INFORMATION DERIVED FROM EXISITNG RECORDS OR ORAL RECOLLECTIONS.

GENERAL NOTES:

WGI INC. HAS EXERCISED ITS BEST PROFESSIONAL EXPERTISE AND GEOPHYSICAL PROSPECTING TECHNIQUES TO DEVELOP THIS MAPPING OF SUBSURFACE UTILITIES WITHIN THE PROJECT LIMITS.

WGI INC. DOES NOT GUARANTEE THAT UTILITIES SHOWN COMPRISE ALL UTILITIES WITHIN THE PROJECT AREA.

WGI's FIELD INVESTIGATION WAS PERFORMED 07/14/2020 THROUGH 07/24/2020. CHANGES TO UTILITIES AFTER 07/24/2020 MAY HAVE BEEN MADE AND THEREFORE MAY RESULT IN VARIANCES FROM THIS PLAN IF DEEMED ADVISABLE PRIOR TO FINAL DESIGN AND CONSTRUCTION.

FIELD LOCATED UTILITIES MEET THE FEDERAL HIGHWAY ADMINISTRATION DEFINITION FOR "QUALITY LEVEL B" (QLB) STANDARDS.

UTILITY SIZE AND INFORMATION IS BASED ON BEST AVAILABLE FIELD AND RECORD INFORMATION.

ALL UTILITIES SHOWN ARE QUALITY LEVEL B (QLB) UNLESS NOTED OTHERWISE.

ALL ELECTRONIC DEPTHS PROVIDED ARE ESTIMATED APPROXIMATELY TO THE CENTER OF THE UTILITY UNLESS NOTED OTHERWISE AND SHOULD BE USED FOR INFORMATIONAL PURPOSES ONLY.

UTILITY LEGEND:

- A — AERIAL
- UNKNOWN UTILITY
- O — OIL (PETROLEUM)
- CTV — CABLE TV
- T — TELEPHONE
- G — GAS
- E — ELECTRIC
- TS — TRAFFIC SIGNAL/LIGHTING
- W — WATER
- FORCE MAIN
- FO — FIBER OPTIC
- TEST HOLE
- EOI — END OF INFORMATION
- ED — ELECTRONIC DEPTH

JOHN J. BELLIS
062-044796
REGISTERED PROFESSIONAL ENGINEER OF ILLINOIS

John J Bellis
signature

08/05/2020
date

license expires 11/30/2021

SANCHEZ
Sanchez & Associates, P.C.
8604 W. Catalpa Avenue, Suite 912
Chicago, IL 60656
Phone No. (773) 444-0144

WGI
2001 Butterfield Road, Suite 410
Downers Grove, IL 60515
Phone No. (630) 307-3800
Fax No. (630) 307-7030
Cert No. 6091 - LB No. 7055

USER NAME = Erick.Maleza	DESIGNED -	REVISED -	
	DRAWN - EM	REVISED -	
PLOT SCALE = 50.0000 ' / in.	CHECKED - EG	REVISED -	
PLOT DATE = 8/5/2020	DATE -	REVISED -	

STATE OF ILLINOIS
DEPARTMENT OF TRANSPORTATION

IL. RT. 57 AT PAULING RD.
MONEE, ILLINOIS

SCALE: | SHEET 3 OF 6 SHEETS | STA. | TO STA.

F.A.I RTE.	SECTION	COUNTY	TOTAL SHEETS	SHEET NO.
57	99-1HB-2-BR	WILL	133	37
		CONTRACT NO.	60R76	
		ILLINOIS	FED. AID PROJECT	

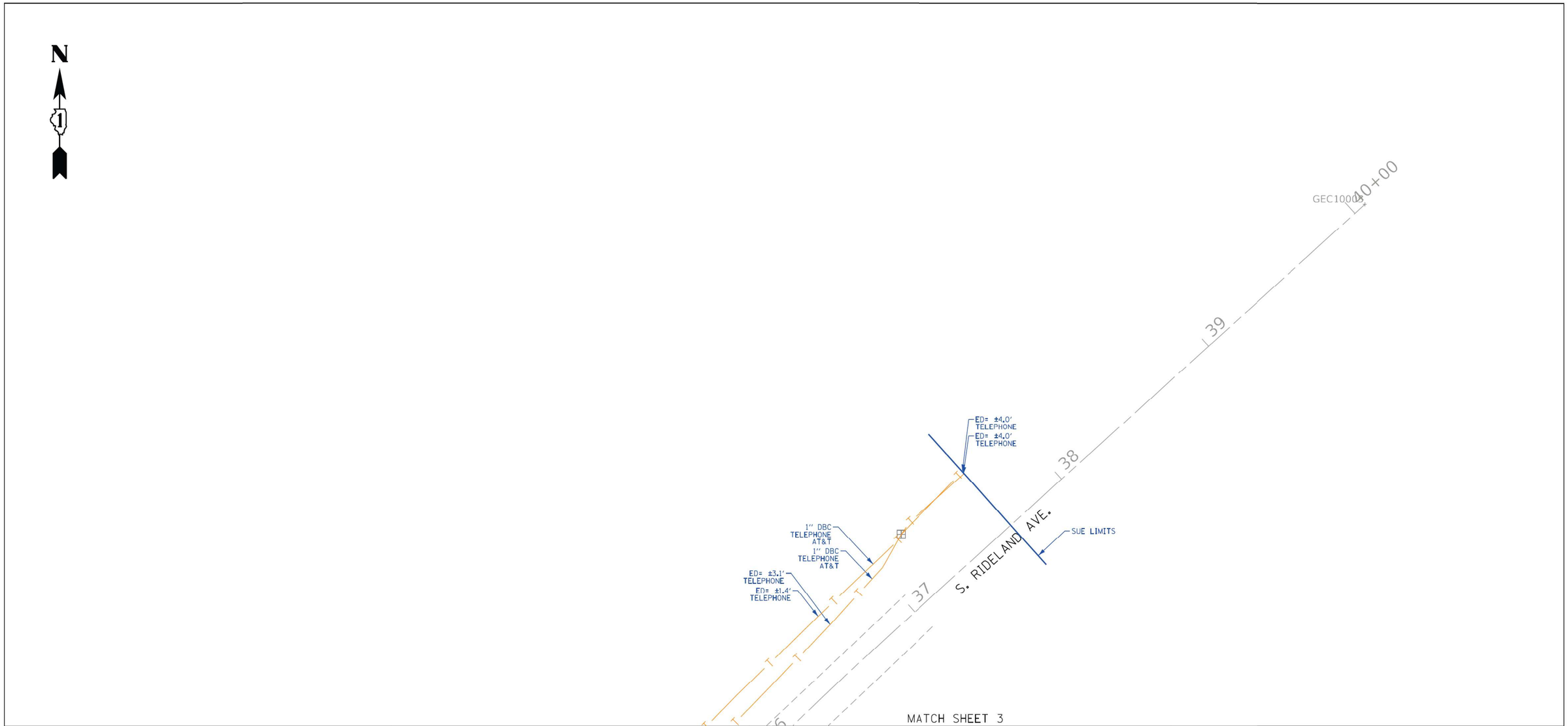

ASCE STANDARDS OF DEPICTION OF SUBSURFACE UTILITIES

QUALITY LEVEL A (QLA)
PRECISE HORIZONTAL AND VERTICAL LOCATION OF UTILITIES OBTAINED BY THE ACTUAL EXPOSURE (OR VERIFICATION OF PREVIOUSLY EXPOSED AND SURVEYED UTILITIES) USING MINIMALLY INTRUSIVE EXCAVATION EQUIPMENT TO MINIMIZE POTENTIAL FOR UTILITY DAMAGE, AND SUBSEQUENT MEASURMENT OF THE SUBSURFACE UTILITIES WITH OTHER UTILITY ATTRIBUTES SUCH AS TYPE, SIZE & MATERIAL OF UTILITY.

QUALITY LEVEL B (QLB)
INFORMATION OBTAINED THROUGH THE APPLICATION OF APPROPRIATE SURFACE GEOPHYSICAL METHODS TO DETERMINE THE EXISTENCE AND APPROXIMATE HORIZONTAL POSITION OF SUBSURFACE UTILTIES. QUALITY LEVEL B DATA SHOULD BE REPRODUCIBLE BY SURFACE GEOPHYSICS AT ANY POINT OF THEIR DEPICTION. THIS INFORMATION IS SURVEYED TO APPLICABLE TOLERANCES DEFINED BY THE PROJECT AND REDUCED ONTO PLAN DOCUMENTS.

QUALITY LEVEL C (QLC)
INFORMATION OBTAINED BY SURVEYING AND PLOTTING VISIBLE ABOVE-GROUND UTLITY FEATURES AND BY USING PROFESSIONAL JUDGEMENT IN CORRELATING THIS INFORMATION TO QUALITY LEVEL D INFORMATION.

QUALITY LEVEL D (QLD)
INFORMATION DERIVED FROM EXISITNG RECORDS OR ORAL RECOLLECTIONS.

GENERAL NOTES:

WGI INC. HAS EXERCISED ITS BEST PROFESSIONAL EXPERTISE AND GEOPHYSICAL PROSPECTING TECHNIQUES TO DEVELOP THIS MAPPING OF SUBSURFACE UTILITIES WITHIN THE PROJECT LIMITS.

WGI INC. DOES NOT GUARANTEE THAT UTILITIES SHOWN COMPRISE ALL UTILITIES WITHIN THE PROJECT AREA.

WGI's FIELD INVESTIGATION WAS PERFORMED 07/14/2020 THROUGH 07/24/2020. CHANGES TO UTILITIES AFTER 07/24/2020 MAY HAVE BEEN MADE AND THEREFORE MAY RESULT IN VARIANCES FROM THIS PLAN IF DEEMED ADVISABLE PRIOR TO FINAL DESIGN AND CONSTRUCTION.

FIELD LOCATED UTILITIES MEET THE FEDERAL HIGHWAY ADMINISTRATION DEFINITION FOR "QUALITY LEVEL B" (QLB) STANDARDS.

UTILITY SIZE AND INFORMATION IS BASED ON BEST AVAILABLE FIELD AND RECORD INFORMATION.

ALL UTILITIES SHOWN ARE QUALITY LEVEL B (QLB) UNLESS NOTED OTHERWISE.

ALL ELECTRONIC DEPTHS PROVIDED ARE ESTIMATED APPROXIMATELY TO THE CENTER OF THE UTILITY UNLESS NOTED OTHERWISE AND SHOULD BE USED FOR INFORMATIONAL PURPOSES ONLY.

UTILITY LEGEND:

- A — AERIAL
- UNKNOWN UTILITY
- O — OIL (PETROLEUM)
- CTV — CABLE TV
- T — TELEPHONE
- G — GAS
- E — ELECTRIC
- E — TRAFFIC SIGNAL/LIGHTING
- W — WATER
- FORCE MAIN
- FO — FIBER OPTIC
- TEST HOLE
- EOI — END OF INFORMATION
- ED — ELECTRONIC DEPTH

JOHN J. BELLIS
062-044796
REGISTERED PROFESSIONAL ENGINEER OF ILLINOIS

John J. Bellis
signature

08/05/2020
date

license expires 11/30/2021

SANCHEZ
Sanchez & Associates, P.C.
8604 W. Catalpa Avenue, Suite 912
Chicago, IL 60656
Phone No. (773) 444-0144

WGI
2001 Butterfield Road, Suite 410
Downers Grove, IL 60515
Phone No. (630) 307-3800
Fax No. (630) 307-7030
Cert No. 6091 - LB No. 7055

USER NAME = Erick.Maleza	DESIGNED -	REVISED -	
	DRAWN - EM	REVISED -	
PLOT SCALE = 50.0000 ' / in.	CHECKED - EG	REVISED -	
PLOT DATE = 8/5/2020	DATE -	REVISED -	

STATE OF ILLINOIS
DEPARTMENT OF TRANSPORTATION

IL. RT. 57 AT PAULING RD.
MONEE, ILLINOIS

SCALE: | SHEET 4 OF 6 SHEETS | STA. TO STA.

F.A.I RTE.	SECTION	COUNTY	TOTAL SHEETS	SHEET NO.
57	99-1HB-2-BR	WILL	133	38
		CONTRACT NO. 60R76		
		ILLINOIS FED. AID PROJECT		

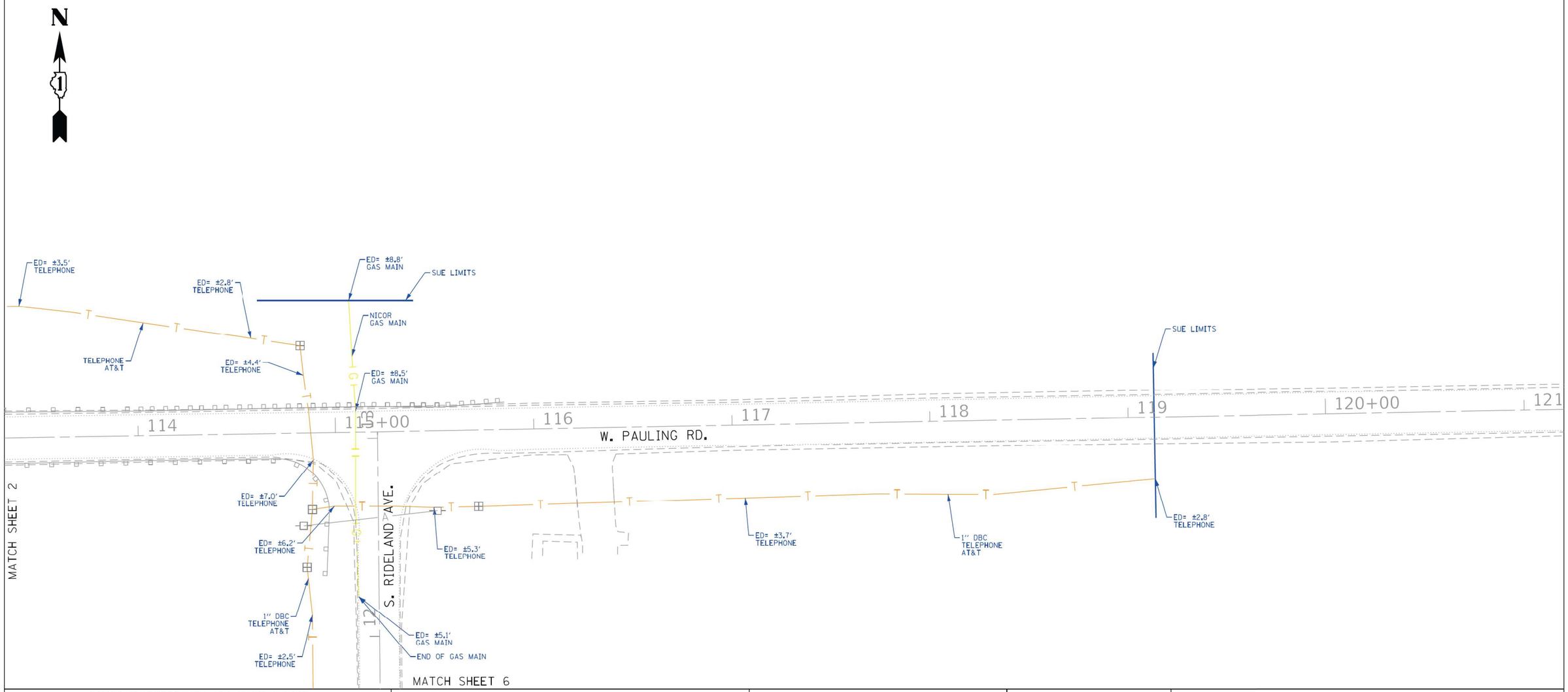

ASCE STANDARDS OF DEPICTION OF SUBSURFACE UTILITIES

QUALITY LEVEL A (QLA)
PRECISE HORIZONTAL AND VERTICAL LOCATION OF UTILITIES OBTAINED BY THE ACTUAL EXPOSURE (OR VERIFICATION OF PREVIOUSLY EXPOSED AND SURVEYED UTILITIES) USING MINIMALLY INTRUSIVE EXCAVATION EQUIPMENT TO MINIMIZE POTENTIAL FOR UTILITY DAMAGE, AND SUBSEQUENT MEASURMENT OF THE SUBSURFACE UTILITIES WITH OTHER UTILITY ATTRIBUTES SUCH AS TYPE, SIZE & MATERIAL OF UTILITY.

QUALITY LEVEL B (QLB)
INFORMATION OBTAINED THROUGH THE APPLICATION OF APPROPRIATE SURFACE GEOPHYSICAL METHODS TO DETERMINE THE EXISTENCE AND APPROXIMATE HORIZONTAL POSITION OF SUBSURFACE UTILTIES. QUALITY LEVEL B DATA SHOULD BE REPRODUCIBLE BY SURFACE GEOPHYSICS AT ANY POINT OF THEIR DEPICTION. THIS INFORMATION IS SURVEYED TO APPLICABLE TOLERANCES DEFINED BY THE PROJECT AND REDUCED ONTO PLAN DOCUMENTS.

QUALITY LEVEL C (QLC)
INFORMATION OBTAINED BY SURVEYING AND PLOTTING VISIBLE ABOVE-GROUND UTLITY FEATURES AND BY USING PROFESSIONAL JUDGEMENT IN CORRELATING THIS INFORMATION TO QUALITY LEVEL D INFORMATION.

QUALITY LEVEL D (QLD)
INFORMATION DERIVED FROM EXISITNG RECORDS OR ORAL RECOLLECTIONS.

GENERAL NOTES:

WGI INC. HAS EXERCISED ITS BEST PROFESSIONAL EXPERTISE AND GEOPHYSICAL PROSPECTING TECHNIQUES TO DEVELOP THIS MAPPING OF SUBSURFACE UTILITIES WITHIN THE PROJECT LIMITS.

WGI INC. DOES NOT GUARANTEE THAT UTILITIES SHOWN COMPRISE ALL UTILITIES WITHIN THE PROJECT AREA.

WGI's FIELD INVESTIGATION WAS PERFORMED 07/14/2020 THROUGH 07/24/2020. CHANGES TO UTILITIES AFTER 07/24/2020 MAY HAVE BEEN MADE AND THEREFORE MAY RESULT IN VARIANCES FROM THIS PLAN IF DEEMED ADVISABLE PRIOR TO FINAL DESIGN AND CONSTRUCTION.

FIELD LOCATED UTILITIES MEET THE FEDERAL HIGHWAY ADMINISTRATION DEFINITION FOR "QUALITY LEVEL B" (QLB) STANDARDS.

UTILITY SIZE AND INFORMATION IS BASED ON BEST AVAILABLE FIELD AND RECORD INFORMATION.

ALL UTILITIES SHOWN ARE QUALITY LEVEL B (QLB) UNLESS NOTED OTHERWISE.

ALL ELECTRONIC DEPTHS PROVIDED ARE ESTIMATED APPROXIMATELY TO THE CENTER OF THE UTILITY UNLESS NOTED OTHERWISE AND SHOULD BE USED FOR INFORMATIONAL PURPOSES ONLY.

UTILITY LEGEND:

- A — AERIAL
- UNKNOWN UTILITY
- O — OIL (PETROLEUM)
- CTV — CABLE TV
- T — TELEPHONE
- G — GAS
- E — ELECTRIC
- E — TRAFFIC SIGNAL/LIGHTING
- W — WATER
- FORCE MAIN
- FO — FIBER OPTIC
- TEST HOLE
- EOI — END OF INFORMATION
- ED — ELECTRONIC DEPTH

JOHN J. BELLIS
062-044796
REGISTERED PROFESSIONAL ENGINEER OF ILLINOIS

John J Bellis
signature

08/05/2020
date

license expires 11/30/2021

SANCHEZ
Sanchez & Associates, P.C.
8604 W. Catalpa Avenue, Suite 912
Chicago, IL 60656
Phone No. (773) 444-0144

WGI
2001 Butterfield Road, Suite 410
Downers Grove, IL 60515
Phone No. (630) 307-3800
Fax No. (630) 307-7030
Cert No. 6091 - LB No. 7055

USER NAME = Erick.Maleza	DESIGNED -	REVISED -	
	DRAWN - EM	REVISED -	
PLOT SCALE = 50.0000 ' / in.	CHECKED - EG	REVISED -	
PLOT DATE = 8/5/2020	DATE -	REVISED -	

STATE OF ILLINOIS
DEPARTMENT OF TRANSPORTATION

IL. RT. 57 AT PAULING RD.
MONEE, ILLINOIS

SCALE: | SHEET 5 OF 6 SHEETS | STA. TO STA.

F.A.I RTE.	SECTION	COUNTY	TOTAL SHEETS	SHEET NO.
57	99-1HB-2-BR	WILL	133	39
		CONTRACT NO. 60R76		
		ILLINOIS FED. AID PROJECT		

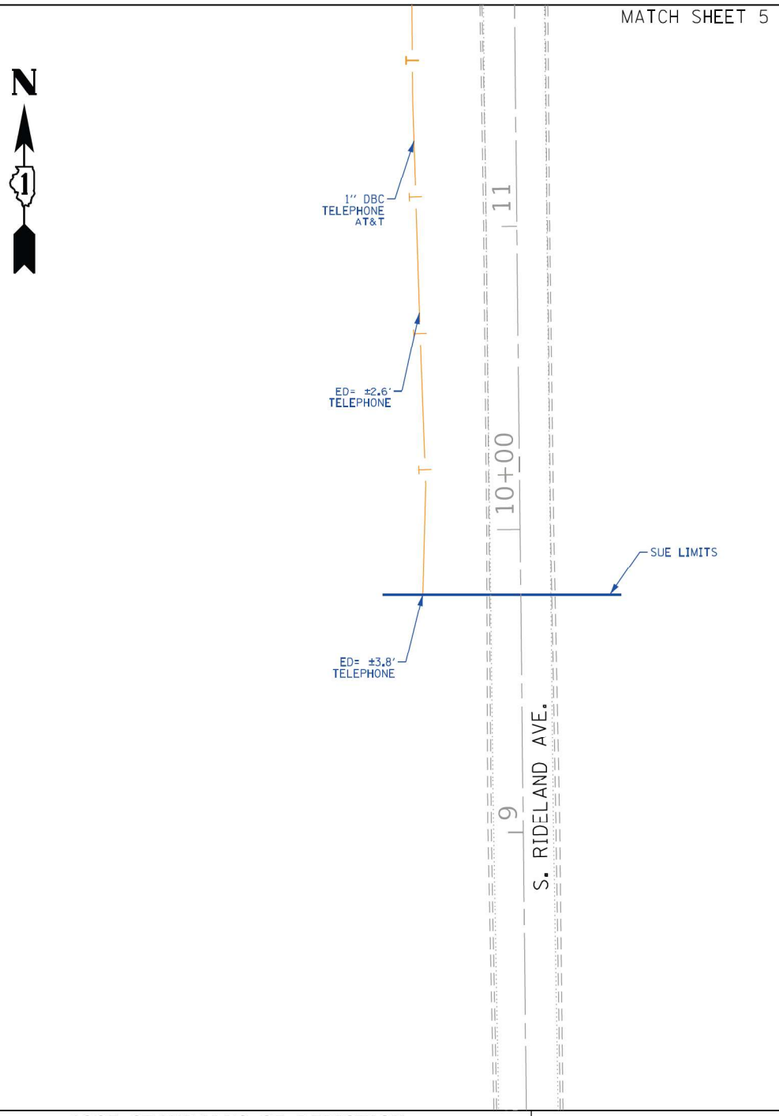

ASCE STANDARDS OF DEPICTION OF SUBSURFACE UTILITIES

QUALITY LEVEL A (QLA)
PRECISE HORIZONTAL AND VERTICAL LOCATION OF UTILITIES OBTAINED BY THE ACTUAL EXPOSURE (OR VERIFICATION OF PREVIOUSLY EXPOSED AND SURVEYED UTILITIES) USING MINIMALLY INTRUSIVE EXCAVATION EQUIPMENT TO MINIMIZE POTENTIAL FOR UTILITY DAMAGE, AND SUBSEQUENT MEASURMENT OF THE SUBSURFACE UTILITIES WITH OTHER UTILITY ATTRIBUTES SUCH AS TYPE, SIZE & MATERIAL OF UTILITY.

QUALITY LEVEL B (QLB)
INFORMATION OBTAINED THROUGH THE APPLICATION OF APPROPRIATE SURFACE GEOPHYSICAL METHODS TO DETERMINE THE EXISTENCE AND APPROXIMATE HORIZONTAL POSITION OF SUBSURFACE UTILTIES. QUALITY LEVEL B DATA SHOULD BE REPRODUCIBLE BY SURFACE GEOPHYSICS AT ANY POINT OF THEIR DEPICTION. THIS INFORMATION IS SURVEYED TO APPLICABLE TOLERANCES DEFINED BY THE PROJECT AND REDUCED ONTO PLAN DOCUMENTS.

QUALITY LEVEL C (QLC)
INFORMATION OBTAINED BY SURVEYING AND PLOTTING VISIBLE ABOVE-GROUND UTLITY FEATURES AND BY USING PROFESSIONAL JUDGEMENT IN CORRELATING THIS INFORMATION TO QUALITY LEVEL D INFORMATION.

QUALITY LEVEL D (QLD)
INFORMATION DERIVED FROM EXISITNG RECORDS OR ORAL RECOLLECTIONS.

GENERAL NOTES:

WGI INC. HAS EXERCISED ITS BEST PROFESSIONAL EXPERTISE AND GEOPHYSICAL PROSPECTING TECHNIQUES TO DEVELOP THIS MAPPING OF SUBSURFACE UTILITIES WITHIN THE PROJECT LIMITS.

WGI INC. DOES NOT GUARANTEE THAT UTILITIES SHOWN COMPRISE ALL UTILITIES WITHIN THE PROJECT AREA.

WGI's FIELD INVESTIGATION WAS PERFORMED 07/14/2020 THROUGH 07/24/2020. CHANGES TO UTILITIES AFTER 07/24/2020 MAY HAVE BEEN MADE AND THEREFORE MAY RESULT IN VARIANCES FROM THIS PLAN IF DEEMED ADVISABLE PRIOR TO FINAL DESIGN AND CONSTRUCTION.

FIELD LOCATED UTILITIES MEET THE FEDERAL HIGHWAY ADMINISTRATION DEFINITION FOR "QUALITY LEVEL B" (QLB) STANDARDS.

UTILITY SIZE AND INFORMATION IS BASED ON BEST AVAILABLE FIELD AND RECORD INFORMATION.

ALL UTILITIES SHOWN ARE QUALITY LEVEL B (QLB) UNLESS NOTED OTHERWISE.

ALL ELECTRONIC DEPTHS PROVIDED ARE ESTIMATED APPROXIMATELY TO THE CENTER OF THE UTILITY UNLESS NOTED OTHERWISE AND SHOULD BE USED FOR INFORMATIONAL PURPOSES ONLY.

UTILITY LEGEND:

- A — AERIAL
- UNKNOWN UTILITY
- O — OIL (PETROLEUM)
- CTV — CABLE TV
- T — TELEPHONE
- G — GAS
- E — ELECTRIC
- E — TRAFFIC SIGNAL/LIGHTING
- W — WATER
- FORCE MAIN
- FO — FIBER OPTIC
- TEST HOLE
- EOI — END OF INFORMATION
- ED — ELECTRONIC DEPTH

JOHN J. BELLIS
062-044796
REGISTERED PROFESSIONAL ENGINEER OF ILLINOIS

John J Bellis
signature

08/05/2020
date

license expires 11/30/2021

SANCHEZ
Sanchez & Associates, P.C.
8604 W. Catalpa Avenue, Suite 912
Chicago, IL 60656
Phone No. (773) 444-0144

WGI
2001 Butterfield Road, Suite 410
Downers Grove, IL 60515
Phone No. (630) 307-3800
Fax No. (630) 307-7030
Cert No. 6091 - LB No. 7055

USER NAME = Erick.Maleza	DESIGNED -	REVISED -	
	DRAWN - EM	REVISED -	
PLOT SCALE = 50.0000 ' / in.	CHECKED - EG	REVISED -	
PLOT DATE = 8/5/2020	DATE -	REVISED -	

STATE OF ILLINOIS
DEPARTMENT OF TRANSPORTATION

IL. RT. 57 AT PAULING RD.
MONEE, ILLINOIS

SCALE: | SHEET 6 OF 6 SHEETS | STA. TO STA.

F.A.I RTE.	SECTION	COUNTY	TOTAL SHEETS	SHEET NO.
57	99-1HB-2-BR	WILL	133	40
		CONTRACT NO. 60R76		
	ILLINOIS	FED. AID PROJECT		

GENERAL SIGNING LEGEND

REL	RELOCATE
PR	PROPOSED
R AND R	REMOVE AND REINSTALL
R	REMOVAL
W/G	WHITE/GREEN
B/Y	BLACK/YELLOW
B/W	BLACK/WHITE
W/BL	WHITE/BLUE
W/R	WHITE/RED
R/W	RED/WHITE
B/B/L	BLACK/BLACK/WHITE
R/G/O	RED/GREEN/ORANGE
B/O	BLACK/ORANGE
B/W/G/P	BLACK/WHITE/GREEN/PURPLE
B/W/G	BLACK/WHITE/GREEN
G/W	GREEN/WHITE
B/W/R	BLACK/WHITE/RED
W/BR	WHITE/BROWN

REL
1A
R1-1
30X30
R/W

REL
1B
W4-4P
24X12
B/Y

VERIFY

REL
2
W8-13
36X36
B/Y

REL
3
W1-7
36X18
B/Y

PAULING RD

REL
4A
D3-1
66X18
W/BL

RIDGELAND AVE

REL
4B
D3-1
72X18
W/BL

VERIFY

REL
5
-
36X24
W/BR

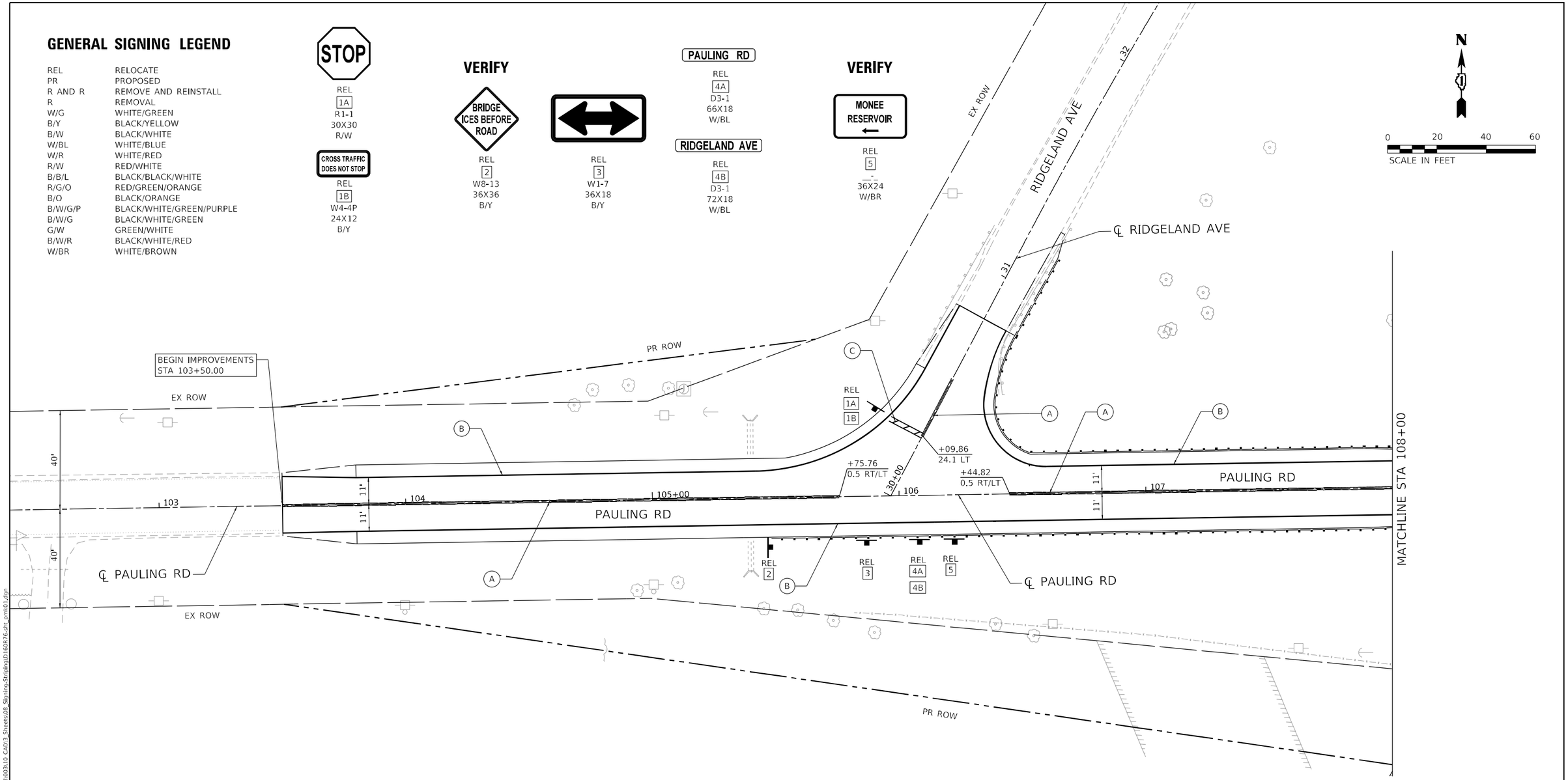

PAVEMENT MARKING LEGEND

(A) THERMOPLASTIC PAVEMENT MARKING LINE 4" (SOLID DOUBLE YELLOW, 11" C-C)

(B) THERMOPLASTIC PAVEMENT MARKING LINE 4" (SOLID WHITE EDGE LINE)

(C) THERMOPLASTIC PAVEMENT MARKING LINE 24" (SOLID WHITE STOP BAR)

(D) MODIFIED URETHANE PAVEMENT MARKING - LINE 4" (SOLID WHITE EDGE LINE)

(E) MODIFIED URETHANE PAVEMENT MARKING - LINE 4" (SOLID DOUBLE YELLOW, 11" C-C)

NOTES

1. ALL PAVEMENT MARKINGS SHALL BE PLACED IN ACCORDANCE WITH TC-13 "DISTRICT ONE TYPICAL PAVEMENT MARKINGS" STANDARD DETAIL.
2. THERMOPLASTIC PAVEMENT MARKING LINE SHALL BE USED ON PAVEMENT SURFACES. MODIFIED URETHANE PAVEMENT MARKING SHALL BE USED ON BRDIGE DECK SURFACES.

MODEL: Default
FILE NAME: pw:\\atlas-pw.bentley.com:atlas-pw-01\Documents\Projects\1001\1001 CV 008\003\10 CAD\3 Sheets\08 Signing-Striping\D160R76-sht-pmk01.dgn

AEG ATLAS ENGINEERING GROUP, LTD.	USER NAME = cpujari	DESIGNED - CVP	REVISED -	STATE OF ILLINOIS DEPARTMENT OF TRANSPORTATION	PAVEMENT MARKING AND SIGNING PLAN I-57 AT PAULING ROAD
		DRAWN - CVP	REVISED -		
	PLOT SCALE = 40.0000 ' / in.	CHECKED - BA	REVISED -		
	PLOT DATE = 3/7/2025	DATE - 03/06/2024	REVISED -		SCALE: 1" = 20' SHEET 1 OF 5 SHEETS STA. TO STA.

F.A.I. RTE.	SECTION	COUNTY	TOTAL SHEETS	SHEET NO.
57	99-1HB-2-BR	WILL	133	41
		CONTRACT NO. 60R76		
	ILLINOIS	FED. AID PROJECT		

GENERAL SIGNING LEGEND

REL	RELOCATE
PR	PROPOSED
R AND R	REMOVE AND REINSTALL
R	REMOVAL
W/G	WHITE/GREEN
B/Y	BLACK/YELLOW
B/W	BLACK/WHITE
W/BL	WHITE/BLUE
W/R	WHITE/RED
R/W	RED/WHITE
B/B/L	BLACK/BLACK/WHITE
R/G/O	RED/GREEN/ORANGE
B/O	BLACK/ORANGE
B/W/G/P	BLACK/WHITE/GREEN/PURPLE
B/W/G	BLACK/WHITE/GREEN
G/W	GREEN/WHITE
B/W/R	BLACK/WHITE/RED
W/BR	WHITE/BROWN

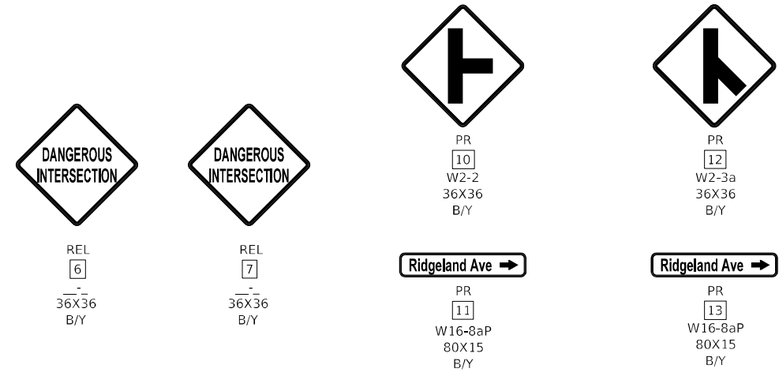

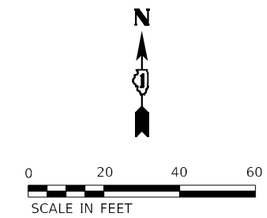

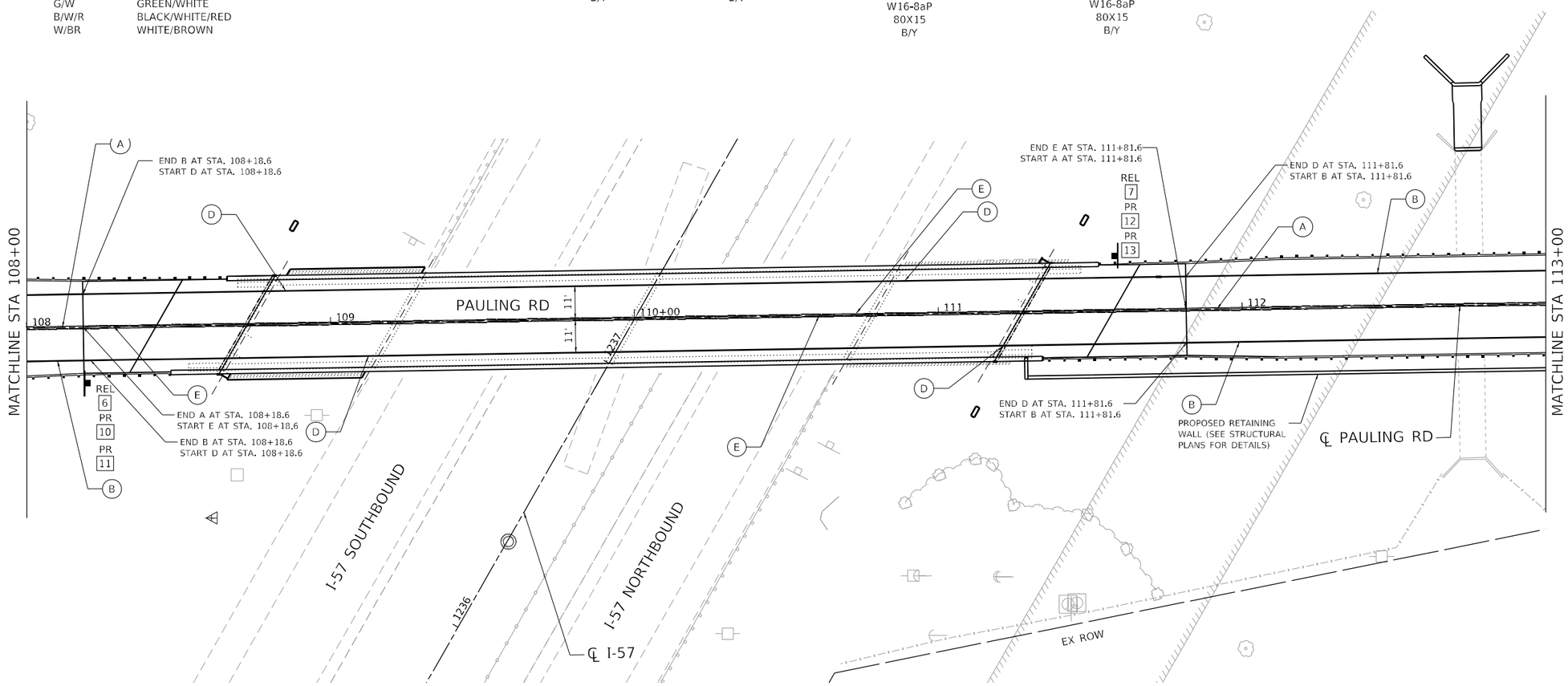

PAVEMENT MARKING LEGEND

- (A) THERMOPLASTIC PAVEMENT MARKING LINE 4" (SOLID DOUBLE YELLOW, 11" C-C)
- (B) THERMOPLASTIC PAVEMENT MARKING LINE 4" (SOLID WHITE EDGE LINE)
- (C) THERMOPLASTIC PAVEMENT MARKING LINE 24" (SOLID WHITE STOP BAR)
- (D) MODIFIED URETHANE PAVEMENT MARKING - LINE 4" (SOLID WHITE EDGE LINE)
- (E) MODIFIED URETHANE PAVEMENT MARKING - LINE 4" (SOLID DOUBLE YELLOW, 11" C-C)

NOTES

1. ALL PAVEMENT MARKINGS SHALL BE PLACED IN ACCORDANCE WITH TC-13 "DISTRICT ONE TYPICAL PAVEMENT MARKINGS" STANDARD DETAIL.
2. THERMOPLASTIC PAVEMENT MARKING LINE SHALL BE USED ON PAVEMENT SURFACES. MODIFIED URETHANE PAVEMENT MARKING SHALL BE USED ON BRDIGE DECK SURFACES.

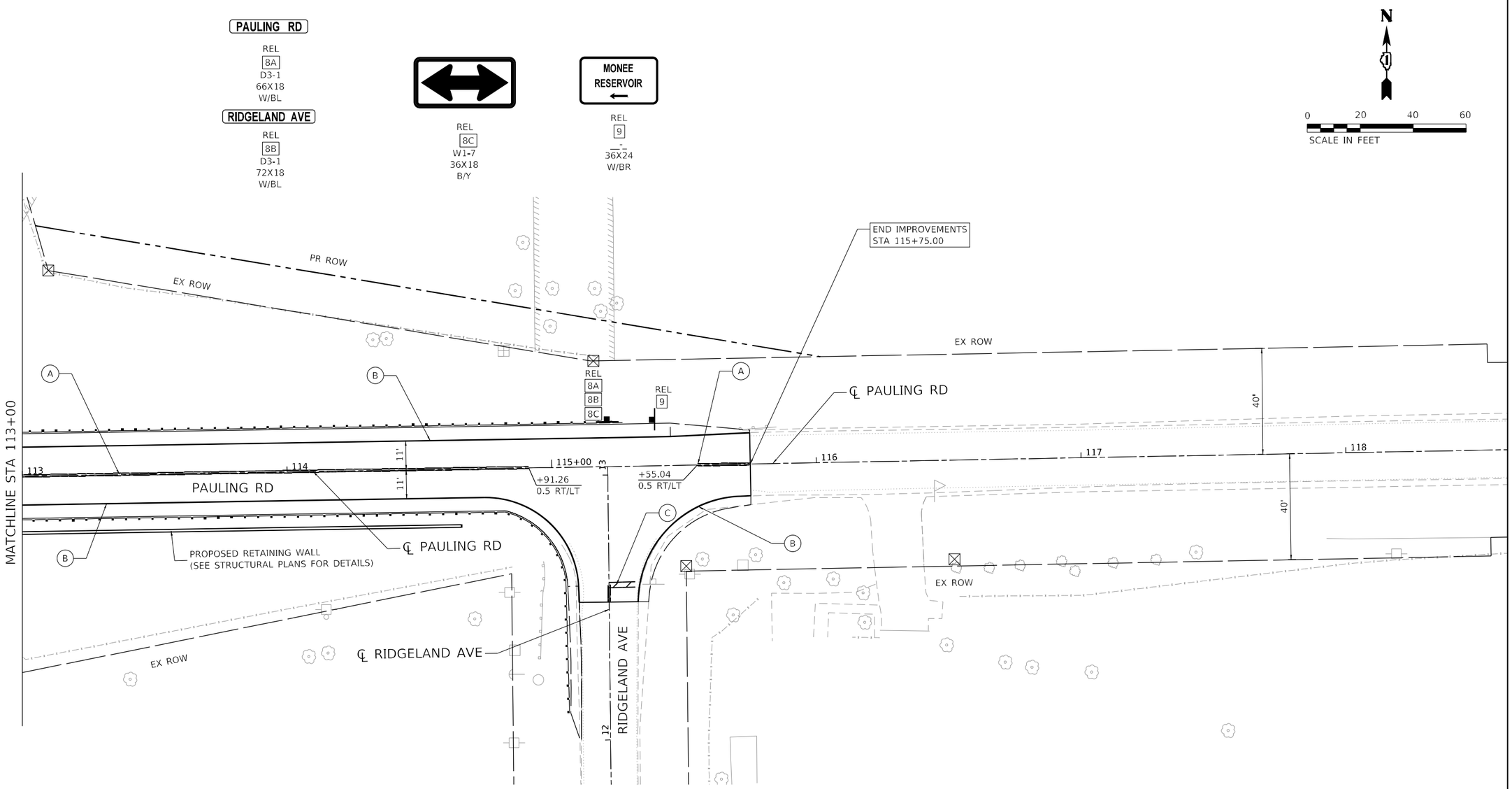

PAVEMENT MARKING LEGEND

- (A) THERMOPLASTIC PAVEMENT MARKING LINE 4" (SOLID DOUBLE YELLOW, 11" C-C)
- (B) THERMOPLASTIC PAVEMENT MARKING LINE 4" (SOLID WHITE EDGE LINE)
- (C) THERMOPLASTIC PAVEMENT MARKING LINE 24" (SOLID WHITE STOP BAR)
- (D) MODIFIED URETHANE PAVEMENT MARKING - LINE 4" (SOLID WHITE EDGE LINE)
- (E) MODIFIED URETHANE PAVEMENT MARKING - LINE 4" (SOLID DOUBLE YELLOW, 11" C-C)

NOTES

1. ALL PAVEMENT MARKINGS SHALL BE PLACED IN ACCORDANCE WITH TC-13 "DISTRICT ONE TYPICAL PAVEMENT MARKINGS" STANDARD DETAIL.
2. THERMOPLASTIC PAVEMENT MARKING LINE SHALL BE USED ON PAVEMENT SURFACES. MODIFIED URETHANE PAVEMENT MARKING SHALL BE USED ON BRDIGE DECK SURFACES.

MODEL: Default
FILE NAME: pw:\\atlas-pw.bentley.com:atlas-pw-01\Documents\Projects\1001\1001 CV 008\003\10 CADD\3 Sheets\08 Signing-Striping\D160R76-sht_pms03.dgn

AEG ATLAS ENGINEERING GROUP, LTD.	USER NAME = cpujari	DESIGNED - CVP	REVISED -	STATE OF ILLINOIS DEPARTMENT OF TRANSPORTATION	PAVEMENT MARKING AND SIGNING PLANS I-57 AT PAULING ROAD	F.A.I. RTE.	SECTION	COUNTY	TOTAL SHEETS	SHEET NO.
		DRAWN - CVP	REVISED -			57	99-1HB-2-BR	WILL	133	43
	PLOT SCALE = 40.0000 ' / in.	CHECKED - BA	REVISED -					CONTRACT NO. 60R76		
	PLOT DATE = 3/7/2025	DATE - 03/06/2024	REVISED -		SCALE: 1" = 20' SHEET 3 OF 5 SHEETS STA. TO STA.		ILLINOIS	FED. AID PROJECT		

EXISTING SIGNS TO REMAIN AND SIGNING RELOCATION SCHEDULE										RELOC SIGN PANEL ASSY TA (72400500)	RELOC SIGN PANEL ASSY TB (72400600)	RELOC SIGN PANEL T1 (72400710)	REM RELOC GR MT SIGN SUPPORT (73500300)	REMARKS
ASSEMBLY ID	LEGEND/DESCRIPTION	COLOR	ALIGNMENT	STATION	OFFSET	W (IN)	H (IN)	AREA (SQ FT)	REMAIN OR RELOCATE	EACH	EACH	SQ FT	EACH	
1A	R1-1/STOP	RED/WHITE	RIDGELAND AVE	30+28	22 LT	30	30	6.25	RELOCATE	1		6.25	1	1 PANEL ON SQUARE STEEL POST. MOUNTED ON THE SAME STEEL POST AS 1B.
1B	W4-4P/CROSS TRAFFIC DOES NOT STOP	BLACK/YELLOW	RIDGELAND AVE	30+28	22 LT	24	12	2	RELOCATE			2		MOUNTED ON THE SAME STEEL POST AS 1A.
2	W8-13/BRIDGE ICES BEFORE ROAD	BLACK/YELLOW	PAULING RD	105+48	20 RT	36	36	9	RELOCATE			9	1	MOUNTED ON THE STEEL POST. RELOCATE TO THE SOUTH SIDE OF THE ROAD.
3	W1-7/TWO DIRECTION LARGE ARROW SIGN	BLACK/YELLOW	PAULING RD	105+88	20 RT	36	18	4.5	RELOCATE			4.5	1	MOUNTED ON THE STEEL POST. RELOCATE TO THE SOUTH SIDE OF THE ROAD.
4A	D3-1/PAULING RD	WHITE/BLUE	PAULING RD	106+09	20 RT	48	12	4	RELOCATE	1		4	1	MOUNTED ON THE SAME STEEL POST AS 4B.
4B	D3-1/RIDGELAND AVE	WHITE/BLUE	PAULING RD	106+09	20 RT	48	12	4	RELOCATE			4		MOUNTED ON THE SAME STEEL POST AS 4A.
5	MONEE RESERVOIR	WHITE/BROWN	PAULING RD	106+21	20RT	36	24	6	RELOCATE			6	1	MOUNTED ON THE STEEL POST.
6	DANGEROUS INTERSECTION	BLACK/YELLOW	PAULING RD	108+20	18 RT	36	36	9	RELOCATE			9		MOUNTED ON THE STEEL POST. RELOCATE ON NEW TELESCOPING STEEL SIGN SUPPORT SAME AS 10 & 11
7	DANGEROUS INTERSECTION	BLACK/YELLOW	PAULING RD	111+58	18 LT	36	36	9	RELOCATE			9		MOUNTED ON THE STEEL POST. RELOCATE ON NEW TELESCOPING STEEL SIGN SUPPORT SAME AS 12 & 13
8A	D3-1/PAULING RD	WHITE/BLUE	PAULING RD	115+21	18 LT	48	12	4	RELOCATE		1	4	1	LOCATED ON THE NORTH SIDE OF THE PAULING ROAD ON THE SAME STEEL POST AS 8B & 8C.
8B	D3-1/RIDGELAND AVE	WHITE/BLUE	PAULING RD	115+21	18 LT	48	12	4	RELOCATE			4		LOCATED ON THE NORTH SIDE OF THE PAULING ROAD ON THE SAME STEEL POST AS 8A & 8C.
8C	W1-7/TWO DIRECTION LARGE ARROW SIGN	BLACK/YELLOW	PAULING RD	115+21	18 LT	36	18	4.5	RELOCATE			4.5		LOCATED ON THE NORTH SIDE OF THE PAULING ROAD ON THE SAME STEEL POST AS 8A & 8B.
9	MONEE RESERVOIR	WHITE/BROWN	PAULING RD	115+38	17 LT	36	24	6	RELOCATE			6	1	MOUNTED ON THE STEEL POST. LOCATED ON THE NORTH SIDE OF THE PAULING ROAD.
									TOTAL	2	1	72.25	7	

SIGNING REMOVAL SCHEDULE									REMOV SIGN PANEL T1 (72400310)	REM GR MT SIN SUPPORT (73700100)	REMARKS
ASSEMBLY ID	LEGEND/DESCRIPTION	COLOR	ALIGNMENT	STATION	OFFSET	W (IN)	H (IN)	AREA (SQ FT)	SQ FT	EACH	
6	DANGEROUS INTERSECTION	BLACK/YELLOW	PAULING RD	108+20	18 RT	36	36	9	0	1	MOUNTED ON THE STEEL POST.
7	DANGEROUS INTERSECTION	BLACK/YELLOW	PAULING RD	111+58	18 LT	36	36	9	0	1	MOUNTED ON THE STEEL POST.
								TOTAL	0	2	

PROPOSED SIGNING SCHEDULE									SIGN PANEL T1 (72000100)	TELES STL SIN SUPPORT (72800100)
ASSEMBLY ID	LEGEND/DESCRIPTION	COLOR	ALIGNMENT	STATION	OFFSET	W (IN)	H (IN)	AREA (SQ FT)	SQ FT	FOOT
10	W2-2/T-INTERSECTION	BLACK/YELLOW	PAULING RD	108+20	18 RT	36	36	9	9	16
11	W16-8aP/RIDGELAND AVE	BLACK/YELLOW	PAULING RD	108+20	18 RT	80	15	8.3	8.3	0.0
12	W2-3a/Y-INTERSECTION	BLACK/YELLOW	PAULING RD	111+58	18 LT	36	36	9	9	16
13	W16-8aP/RIDGELAND AVE	BLACK/YELLOW	PAULING RD	111+58	18 LT	80	15	8.3	8.3	0.0
								TOTAL	34.67	32.00

CODE NO.	ITEM			UNIT
72000100	SIGN PANEL - TYPE 1			SQ FT
STA	OFFSET	LT/RT	AREA (SQ FT)	QUANTITY (SQ FT)
PAULING ROAD				
108+20	18	RT	9	9.0
108+20	18	RT	8	8.3
111+58	18	LT	8	8.3
111+58	18	LT	9	9.0
			TOTAL:	34.67

CODE NO.	ITEM					UNIT
72400500	REMOVE AND RELOCATE SIGN PANEL ASSEMBLY TYPE A					EACH
STA	OFFSET	LT/RT	SIZE (SQ FT)	EACH		QUANTITY (EACH)
PAULING ROAD						
106+09	20	RT	4	1	D3-1/PAULING RD	1
W RIDGELAND AVENUE						
30+28	22	LT	8.25	1	R1-1/STOP, W4-4P/CROSS TRAFFIC DOES NOT STOP	1
					TOTAL:	2

CODE NO.	ITEM					UNIT
72400600	REMOVE AND RELOCATE SIGN PANEL ASSEMBLY TYPE B					EACH
STA	OFFSET	LT/RT	SIZE (SQ FT)	EACH		QUANTITY EACH
PAULING ROAD						
115+21	18	LT	4	1	PAULING RD	1
					TOTAL:	1

CODE NO.	ITEM			UNIT
72400710	RELOCATE SIGN PANEL - TYPE 1			SQ FT
STA	OFFSET	LT/RT	AREA (SQ FT)	QUANTITY (SQ FT)
PAULING ROAD				
105+48	20	RT	9	9.0
105+88	20	RT	5	4.5
106+09	20	RT	4	4.0
106+09	20	RT	4	4.0
106+21	20	RT	6	6.0
108+20	18	RT	9	9.0
111+58	18	LT	9	9.0
115+21	18	LT	4	4.0
115+21	18	LT	4	4.0
115+21	18	LT	4.5	4.5
115+38	17	LT	6.0	6.0
RIDGELAND AVENUE				
30+35	21	LT	6.25	6.3
30+35	21	LT	2	2.0
			TOTAL:	72.25

CODE NO.	ITEM		UNIT
72800100	TELESCOPING STEEL SIGN SUPPORT		FOOT
STA	OFFSET	LT/RT	QUANTITY (FOOT)
PAULING ROAD			
108+20	18	RT	16
111+58	18	LT	16
		TOTAL:	32

CODE NO.	ITEM		UNIT
73700100	REMOVE GROUND MOUNTED SIGN SUPPORT		EACH
STA	OFFSET	LT/RT	QUANTITY (EACH)
PAULING ROAD			
108+20	18	RT	1
111+58	18	LT	1
		TOTAL:	2

CODE NO.	ITEM			UNIT
73500300	REMOVE AND RELOCATE GROUND MOUNTED SIGN SUPPORT			EACH
STA	OFFSET	LT/RT	EACH	QUANTITY EACH
PAULING ROAD				
105+48	20	RT	1	1
105+87	20	RT	1	1
106+08	20	RT	1	1
106+22	20	RT	1	1
115+21	18	LT	1	1
115+38	17	LT	1	1
RIDGELAND AVENUE				
30+35	21	LT	1	1
			TOTAL:	7

CODE NO.	ITEM						UNIT
78000200	THERMOPLASTIC PAVEMENT MARKING - LINE 4"						FOOT
STA.	STA.	OFFSET (LT/RT)	EDGE LINE 4" WHITE (FDOT)	EDGE LINE 4" YELLOW (FDOT)	LANE LINE SKIP DASH 4" WHITE (STA-STA)	DOUBLE LINE 4" YELLOW (FOOT)	QUANTITY (FOOT)
PAULING ROAD							
103+50	105+76	LT/RT				225.8	452
106+45	108+18	LT/RT				173.0	346
111+82	114+91	LT/RT				309.3	619
115+55	115+75	LT/RT				20.0	40
103+50	30+81	LT	305.4				305
103+50	108+18	RT	468.0				468
30+81	108+18	LT	230.0				230
111+82	115+75	LT	393.0				393
111+82	12+52	RT	354.0				354
12+52	115+75	RT	65.4				65
RIDGELAND AVENUE							
30+28	30+54	LT/RT				26.1	52
12+52	12+59	LT/RT				6.4	13
						TOTAL:	3,337

CODE NO.	ITEM			UNIT
78000650	THERMOPLASTIC PAVEMENT MARKING - LINE 24"			FOOT
STA	STA	OFFSET (LT/RT)	STOP LINE 24" WHITE (FOOT)	QUANTITY (FOOT)
RIDGELAND AVENUE				
30+28	30+28	LT	15.8	16
12+59	12+59	RT	12.0	12
			TOTAL:	28

CODE NO.	ITEM					UNIT
78009004	MODIFIED URETHANE PAVEMENT MARKING - LINE 4"					FOOT
STA	STA	OFFSET (LT/RT)	EDGE LINE 4" WHITE (FDOT)	LANE LINE SKIP DASH 4" WHITE (STA-STA)	DOUBLE LINE 4" YELLOW (FOOT)	QUANTITY (FOOT)
PAULING ROAD						
108+18	111+82	LT	364.0			364.0
108+18	111+82	RT	364.0			364.0
108+18	111+82	LT/RT			364.0	728.0
					TOTAL:	1,456

MODEL: Default
FILE NAME: pw:\\atlas-pw.bentley.com:atlas-pw-01\Documents\Projects\100111001 CV 008\003\10 CAD\3 Sheets\08 Signing\Striping\0160R76-ln1_pms04.dgn

AEG ATLAS ENGINEERING GROUP, LTD.

USER NAME = astrashimirov	DESIGNED - CVP	REVISED -	
	DRAWN - CVP	REVISED -	
PLOT SCALE = 100.0000 ' / in.	CHECKED - BA	REVISED -	
PLOT DATE = 3/14/2025	DATE - 03/06/2024	REVISED -	

STATE OF ILLINOIS
DEPARTMENT OF TRANSPORTATION

PAVEMENT MARKING AND SIGNING SCHEDULES
I-57 AT PAULING ROAD

SCALE: 1"=50' | SHEET 5 OF 5 SHEETS | STA. TO STA.

F.A.I RTE.	SECTION	COUNTY	TOTAL SHEETS	SHEET NO.
57	99-1HB-2-BR	WILL	133	45
		CONTRACT NO. 60R76		
	ILLINOIS	FED. AID PROJECT		

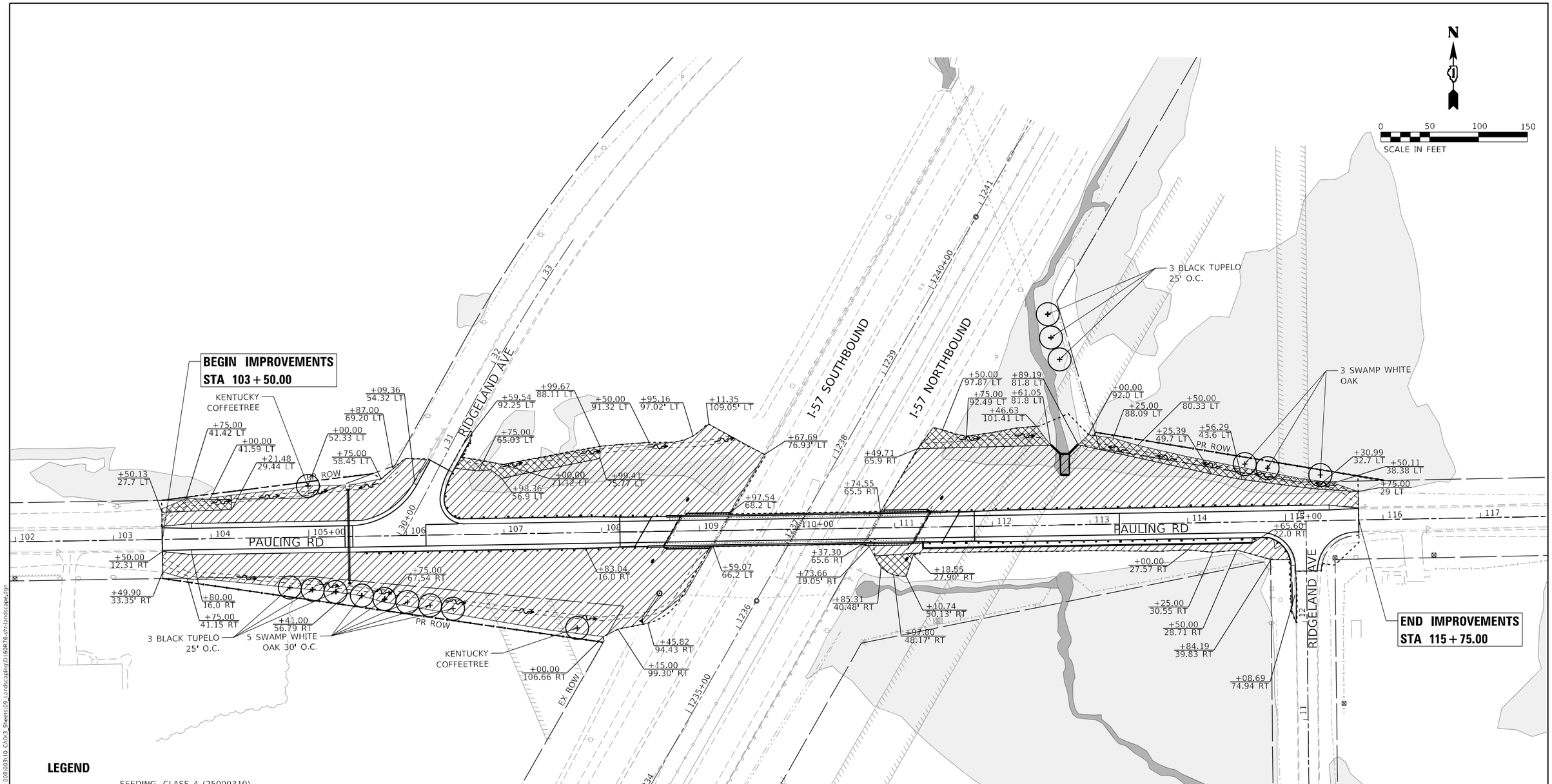

LEGEND

- SEEDING, CLASS 4 (25000310)
  TOPSOIL FURNISH AND PLACE, 4" (21101615)
  WEED CONTROL, BROADLEAF (POST-TREATMENT)
- SEEDING, CLASS 4B (25000314)
  TOPSOIL FURNISH AND PLACE, 4" (21101615)
  WEED CONTROL, AQUATIC (PRE-TREATMENT)
- EXISTING WETLANDS
- EXISTING WOUS
- WOVEN WIRE FENCE, 4'
- PROPOSED ROW
- EXISTING ROW
- SHADE TREE

NOTE:

ENGINEER TO DETERMINE LIMITS OF TOPSOIL AND SEEDING BASED ON FINISHED GRADE CONDITION.

MODEL: Default
FILE NAME: pw:\\atlas-pw.bentley.com:atlas-pw-01\Documents\Projects\100\1001 CV 008\003\10 CAD\3 Sheets\09 Landscaping\D160R76-sht-landscape.dgn

AEG ATLAS ENGINEERING GROUP, LTD.	USER NAME = cpujari	DESIGNED - CVP	REVISED -	STATE OF ILLINOIS DEPARTMENT OF TRANSPORTATION	LANDSCAPING PLAN I-57 AT PAULING ROAD
		DRAWN - CVP	REVISED -		
	PLOT SCALE = 100.0000 ' / in.	CHECKED - BA	REVISED -		
	PLOT DATE = 3/7/2025	DATE - 03/06/2024	REVISED -		SCALE: 1" = 50' SHEET 1 OF 1 SHEETS STA. TO STA.

F.A.I. RTE.	SECTION	COUNTY	TOTAL SHEETS	SHEET NO.
57	99-1HB-2-BR	WILL	133	46
		CONTRACT NO. 60R76		
	ILLINOIS	FED. AID PROJECT		

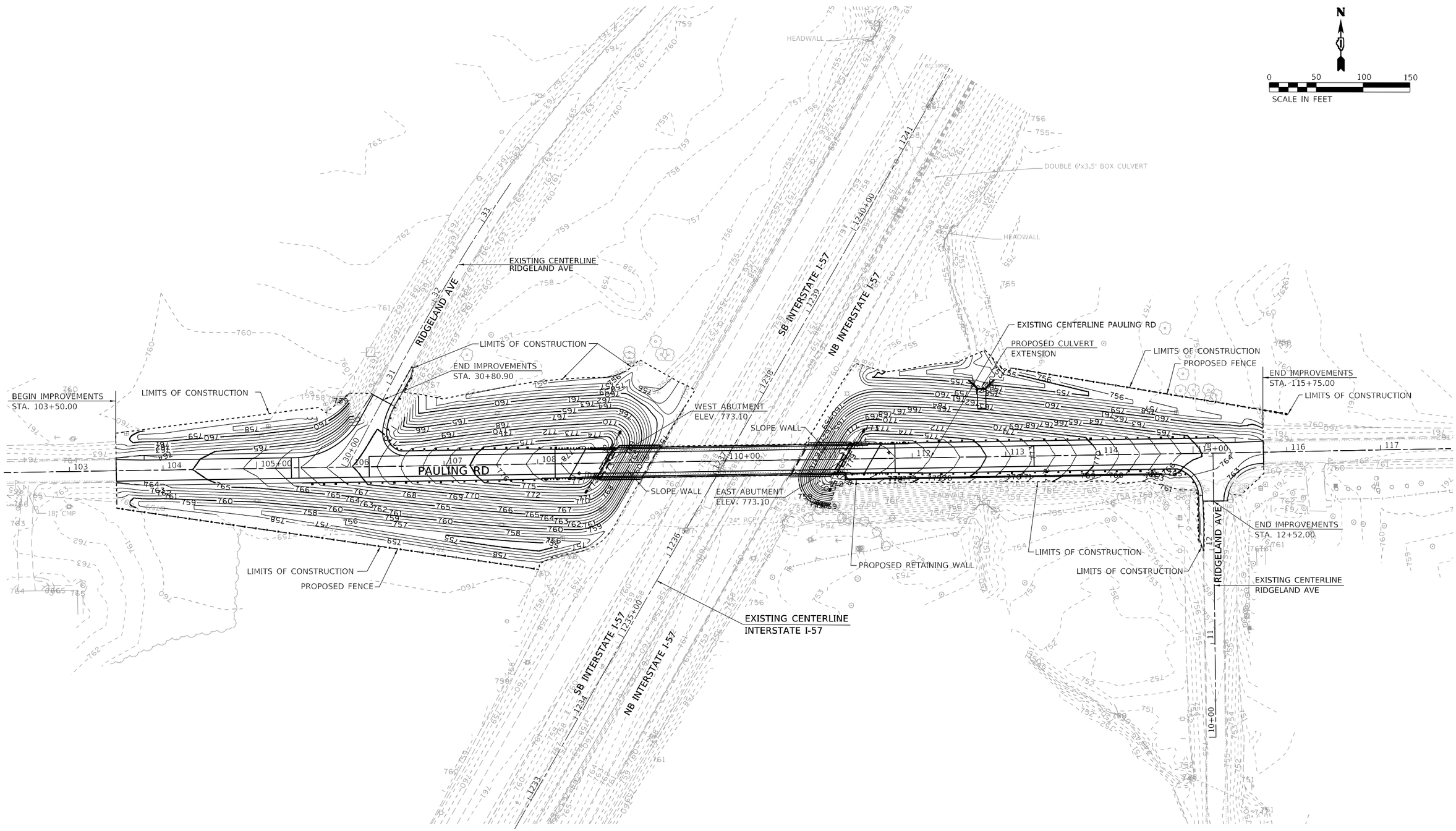

AEG ATLAS ENGINEERING GROUP, LTD.	USER NAME = cpujari	DESIGNED - BAJ	REVISED -	STATE OF ILLINOIS DEPARTMENT OF TRANSPORTATION	GRADING PLAN I-57 I-57 AT PAULING ROAD	F.A.I. RTE.	SECTION	COUNTY	TOTAL SHEETS	SHEET NO.
		DRAWN - BAJ	REVISED -			57	99-1HB-2-BR	WILL	133	47
	PLOT SCALE = 100.0000 ' / in.	CHECKED - BA	REVISED -			CONTRACT NO. 60R76				
	PLOT DATE = 3/7/2025	DATE - 03/06/2024	REVISED -		SCALE: 1" = 50' SHEET GRDS01 OF 1 SHEETS STA. TO STA.	ILLINOIS FED. AID PROJECT				

NO. STRUCTURE NOTATIONS CHKD

MODEL: Default
FILE NAME: pw:\\atlas-pw.bentley.com:atlas-pw-01\Documents\Projects\10011\001 CV 008\003\10 CADD\3 Sheets\09 Landscaping\D160R76-Pr-Rd\Grading\Gn.dgn

SIGN LEGEND

1	PAULING ROAD	SPECIAL 24"X18" 6" BLACK LETTERS ON ORANGE REFLECTIVE BACKGROUND	13	DETOUR AHEAD	W20-2-4848	20	DETOUR M4-10L-4818
2	DETOUR	M4-9L(O)-3024	14	ROAD CLOSED 500 FT	W20-3-4848	21	DETOUR M4-10R-4818
3	DETOUR	M4-9R(O)-3024	15	ROAD CLOSED AHEAD	W20-3-4848	22	BRIDGE OUT
4	DETOUR	M4-9L(O)-3024	16	ROAD CONSTRUCTION AHEAD	W20-1-4848	23	R5-1-3636
5	DETOUR	M4-9R(O)-3024	17		M6-1 2115		
6	DETOUR	M4-9(O)-3024	18	ROAD CLOSED	R11-2-4830		
7	RIDGELAND AVENUE	SPECIAL 24"X18" 6" BLACK LETTERS ON ORANGE REFLECTIVE BACKGROUND	19	ROAD CLOSED TO THRU TRAFFIC	R11-4-6030		
8	NORTH	M3-1(O)-2412					
9	EAST	M3-2(O)-2412					
10	SOUTH	M3-3(O)-2412					
11	WEST	M3-4(O)-2412					
12	END DETOUR	M4-8A-2418					

DETOUR NOTES:

1. SEE IDOT DISTRICT 1 STANDARD DETAIL TC-21 FOR TYPICAL DETOUR SIGN SPACING.

2. TEMPORARY TRAFFIC SIGNAL TIMING WILL BE COMPLETED AT THE FOLLOWING SIGNALIZED INTERSECTIONS:

   TS 7553 MANHATTEN-MONEE ROAD / I-57 EAST RAMPS
   TS 7553 MANHATTEN-MONEE ROAD / I-57 WEST RAMPS
   MANHATTEN-MONEE ROAD / RIDGELAND AVE
   MANHATTEN-MONEE ROAD / AMAZON ACCESS
   MANHATTEN-MONEE ROAD / EGYPTIAN TRAIL/CENTRAL AVENUE
   TS 7552 GOVERNORS HIGHWAY / W COURT STREET

3. DETOUR SIGNAGE SHALL BE CONSIDERED INCLUDED IN THE COST FOR TEMPORARY TRAFFIC CONTROL AND PROTECTION (SPECIAL) EXCEPT AS OTHERWISE NOTED.

4. THE CONTRACTOR SHALL NOT OBSTRUCT ANY EXISTING SIGN WITH THE PLACEMENT OF DETOUR SIGNAGE.

5. A MINIMUM OF 14 DAYS IN ADVANCE OF THE CLOSURE OF W PAULING RD, THE CONTRACTOR SHALL PLACE PORTABLE CHANGEABLE MESSAGE SIGNS IN ADVANCE OF THE CLOSURE AS DIRECTED AND A LOCATION DESIGNATED BY THE ENGINEER TO INFORM MOTORISTS OF THE UPCOMING DETOUR. THIS WORK SHALL BE PAID FOR AT THE CONTRACT UNIT PRICE FOR CHANGEABLE MESSAGE SIGNS.

6. LOCAL ACCESS SHALL BE PROVIDED AT ALL TIMES TO RESIDENTS AND BUSINESS.

DETOUR LEGEND

- EXISTING SIGNALIZED INTERSECTION
- TEMPORARY SIGNAL TIMING
- EXISTING BRIDGE
- DETOUR ROUTE
- PARTIALLY CLOSED ROAD
- DETOUR TRAFFIC DIRECTION (PAULING ROAD)
- DETOUR TRAFFIC DIRECTION (RIDGELAND AVE)
- WORK AREA
- TYPE III BARRICADE (SEE NOTE 2)
- TEMPORARY SIGN

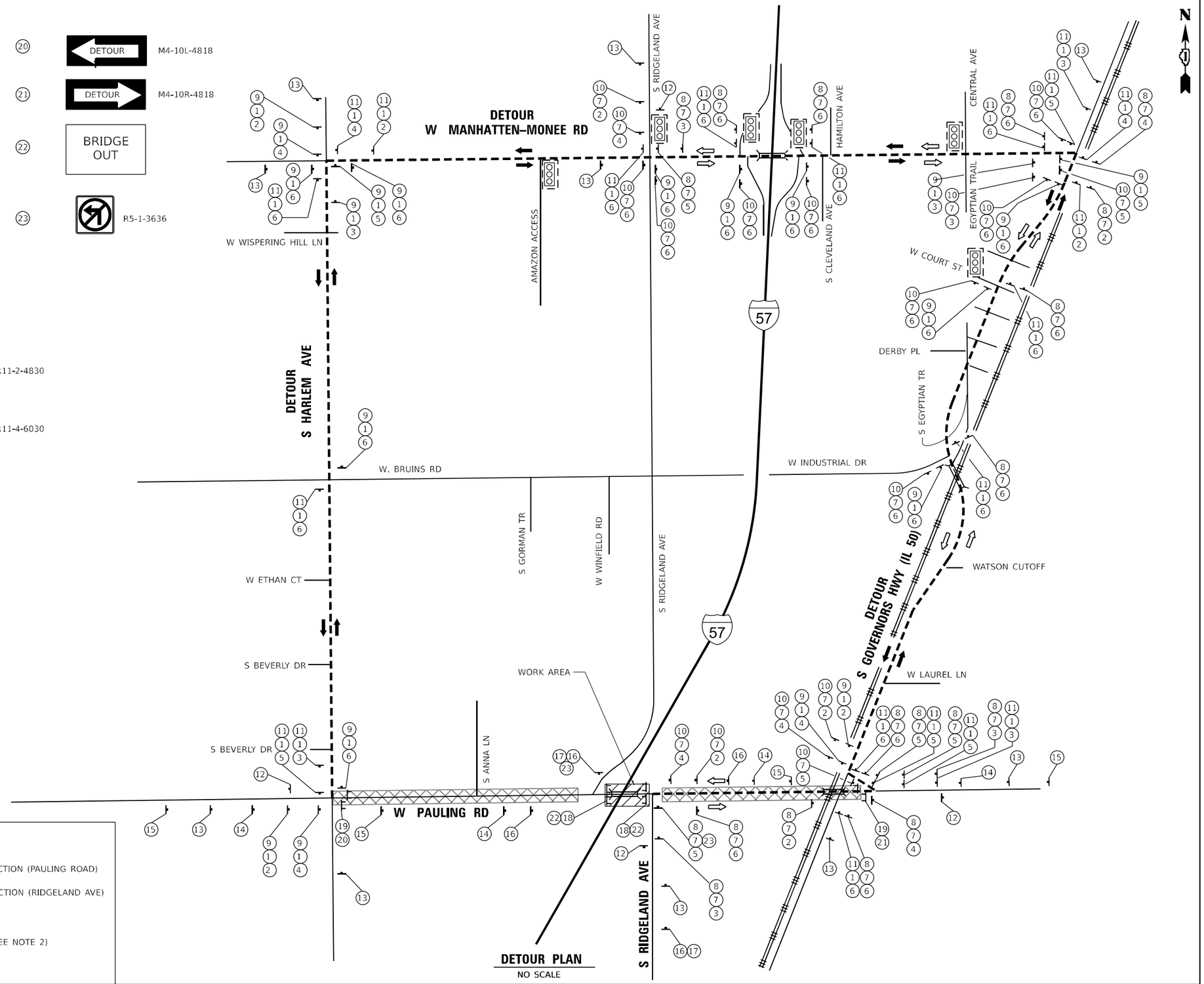

THE HOH GROUP, INC. ARCHITECTS | ENGINEERS	USER NAME = a zpatrick	DESIGNED - AAF	REVISED -
		DRAWN - AAF	REVISED -
	PLOT SCALE = 100.0000 ' / in.	CHECKED - BAP	REVISED -
	PLOT DATE = 2/14/2025	DATE - 7/27/22	REVISED -

STATE OF ILLINOIS
DEPARTMENT OF TRANSPORTATION

DETOUR ROUTE
PAULING ROAD AND RIDGELAND AVENUE

SCALE: NTS | SHEET 1 OF 1 SHEETS | STA. N/A | TO STA. N/A

F.A.I. RTE.	SECTION	COUNTY	TOTAL SHEETS	SHEET NO.
57	99-1HB-2-BR	WILL	133	48
		CONTRACT NO. 60R76		
		ILLINOIS FED. AID PROJECT		

MODEL: Default
FILE NAME: H:\projects\5516 Atlas - PPB 200 - Pauling Road over I-57\Drawings\Civil\Cadd Sheets\D160R76-dtl-1detour.dgn

B.M.: Mag Nail Set Sta. 108+06.59 Offset 12.64' LT Elev. 776.90

Existing Structure: S.N. 099-0204 consists of a four-span continuous non-composite steel beam reinforced concrete deck superstructure supported by single hammerhead piers and spill-thru abutments. The existing bridge is 256'-10" long, 29'-8" wide, and has a 30°-35'-32" left forward skew. The bridge was built in 1967 as Section 99-1HB-2. The deck was sealed in 2015. Outside face of fascia beams, beam ends, and abutment bearings were painted in 2018. Concrete deck to be removed and replaced using a detour.

No salvage.

DESIGN STRESSES

FIELD UNITS (Exist. Const.)

f'c = 3,500 psi
fy = 36,000 psi (Structural Steel)
fy = 40,000 psi (Reinforcement)

FIELD UNITS (New. Const.)

f'c = 4,000 psi (Superstructure)
f'c = 3,500 psi (Substructure)
fy = 60,000 psi (Reinforcement)
fy = 36,000 psi (Bearing Plates)

SEISMIC DATA

Seismic Retrofit Category (SRC) = A
Design Spectral Acceleration at 1.0 sec. (SD1) = 0.068g
Design Spectral Acceleration at 0.2 sec. (SDS) = 0.121g
Soil Site Class = C
Performance Level (PL) = 1

DESIGN SPECIFICATIONS

2002 AASHTO LFD Bridge Design Specifications, 17th Edition

LOADING HS-20

No future wearing surface.

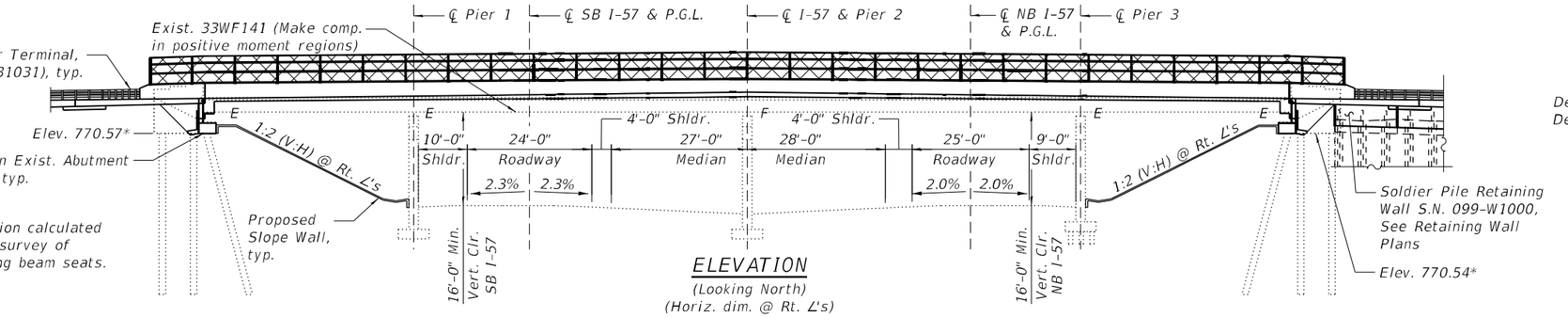

ELEVATION

(Looking North)
(Horiz. dim. @ Rt. L's)

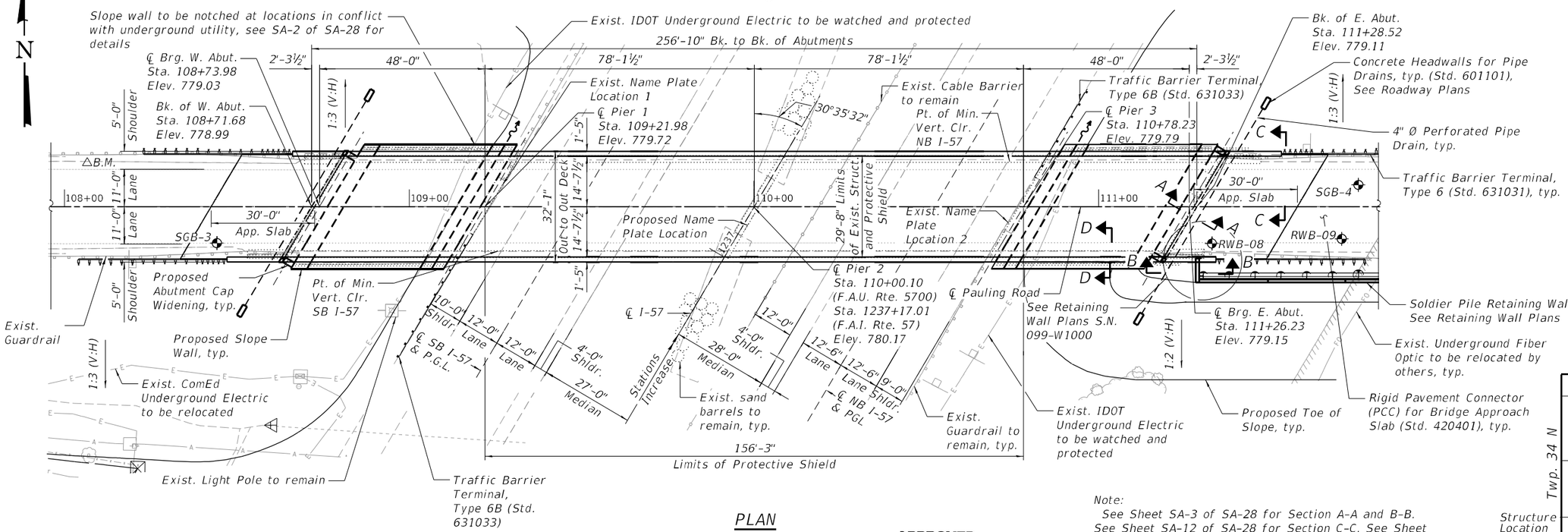

PLAN

Note:
See Sheet SA-3 of SA-28 for Section A-A and B-B.
See Sheet SA-12 of SA-28 for Section C-C. See Sheet SA-2 of SA-28 for Section D-D.

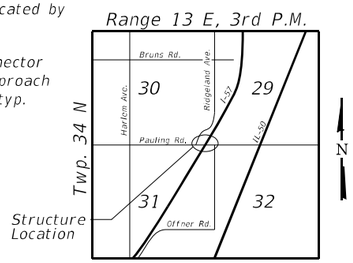

LOCATION SKETCH

SCOPE OF WORK

1. Remove existing concrete deck and replace with wider concrete deck.
2. Make new deck composite in positive moment regions.
3. Widen existing abutment cap and reconfigure into semi-integral abutment. Existing wingwalls will be partially removed.
4. Clean, paint, and reuse pier bearings.
5. Jack existing beams and install new elastomeric bearings with steel extensions at abutments.
6. Repair Beam 2 web at west end with bolted plates.
7. Repair abutments and piers with structural repair of concrete and epoxy crack injection.
8. Replace concrete slope walls.
9. Provide new rigid approach slabs.
10. Clean and paint all existing structural steel.

APPROVED
For Structural Adequacy Only
Engineer of Bridges & Structures

EAMON HOMEDI
081-009103
LICENSED STRUCTURAL ENGINEER
STATE OF ILLINOIS

EAMON HOMEDI, P.E., S.E.
DATE: 03/06/2025
NO. 081-009103
EXP. DATE 11/30/2026

STA. 1237+17.01
RE-BUILT 20__ BY
STATE OF ILLINOIS
F.A.I. RTE. 57 SEC. 99-1HB-2-BR
LOADING HS-20
STR. NO. 099-0204

NAME PLATE

See Std. 515001

GENERAL PLAN AND ELEVATION
I-57 AT PAULING ROAD
F.A.I. RTE. 57
SEC. 99-1HB-2-BR
WILL COUNTY
STATION 1237+17.01
STRUCTURE NO. 099-0204

ATLAS ENGINEERING GROUP, LTD.	USER NAME =	DESIGNED - JJI	REVISED -
		CHECKED - EH	REVISED -
	PLOT SCALE =	DRAWN - JJI	REVISED -
	PLOT DATE =	CHECKED - 1/20/2025	REVISED -

STATE OF ILLINOIS
DEPARTMENT OF TRANSPORTATION

GENERAL PLAN AND ELEVATION
STRUCTURE NO. 099-0204
SHEET SA-1 OF SA-28 SHEETS

F.A.I RTE.	SECTION	COUNTY	TOTAL SHEETS	SHEET NO.
57	99-1HB-2-BR	WILL	133	49
		CONTRACT NO. 60R76		
	ILLINOIS	FED. AID PROJECT		

MODEL: Default
FILE NAME: pw:\\atlas-pw.bentley.com:atlas-pw-01\Documents\Projects\1001\1001 CV 008\003\10 CADD_Sheets\12_Structural\D160R76-099024_001_GP&E
3/7/2025 11:53:22 AM

INDEX OF SHEETS

SA-1.	General Plan and Elevation
SA-2 thru SA-3.	General Data
SA-4 thru SA-6.	Top of Deck Elevations
SA-7.	Top of West Approach Slab Elevations
SA-8.	Top of East Approach Slab Elevations
SA-9 thru SA-10.	Superstructure
SA-11.	Superstructure Details
SA-12.	Diaphragm Details
SA-13 thru SA-15.	Bridge Approach Slab Details
SA-16 thru SA-17.	Bridge Fence Railing, Curved
SA-18.	Structural Steel
SA-19.	Structural Steel Details
SA-20.	Bearing Details
SA-21.	Abutment Removal Details
SA-22.	West Abutment Details
SA-23.	East Abutment Details
SA-24.	Pier 1 Repairs
SA-25.	Pier 2 Repairs
SA-26.	Pier 3 Repairs
SA-27 thru SA-28.	Boring Logs

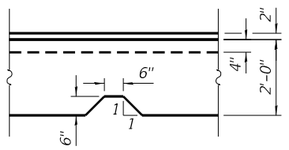

SLOPE WALL NOTCH DETAIL 1

West slope wall only, at locations in conflict with 1.5" underground utility line

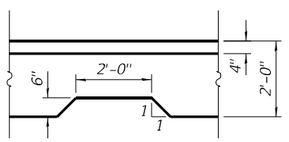

SLOPE WALL NOTCH DETAIL 2

West slope wall only, at locations in conflict with 1.5" underground utility line

GENERAL NOTES

Fasteners shall be ASTM F 3125 Grade A325 Type 1, mechanically galvanized bolts in painted areas. Bolts ⅞ in. diameter, holes 1 7/16 in. diameter, unless otherwise noted.

No field welding is permitted except as specified in the contract documents.

The Contractor shall test the existing welds by non-destructive methods within 2 ft. of the end of the existing cover plates for cracks after removal of the existing concrete deck. Dye penetrant (PT), magnetic particle (MT), or other approved testing method shall be performed by qualified personnel approved by the Engineer. If cracks are found, report them to the Bureau of Bridges & Structures for disposition. The cost of testing is included in Removal of Existing Concrete Deck. The cost of crack repair, if necessary, will be paid for according to Article 109.04 of the Standard Specifications.

Reinforcement bars designated (E) shall be epoxy coated.

Prior to pouring the new concrete deck, all heavy or loose rust, loose mill scale, and other loose detrimental foreign material shall be removed from the surfaces in contact with concrete (SSPC - SP3 standards). Tightly adhered paint may remain unless otherwise noted. Removal shall be accomplished by methods that will not damage the steel and the cost will be paid for according to Article 109.04 of the Standard Specifications. As directed by the Engineer, existing construction accessories welded to the top flange of beams and girders shall be removed. The weld areas shall be ground flush and inspected for cracks using magnetic particle testing (MT) or dye penetrant testing (PT) by qualified personnel approved by the Engineer. Any cracks that cannot be removed by grinding ¼ in. deep shall be identified and reported to the Bureau of Bridges & Structures for further disposition. The cost of removing welded accessories, grinding and inspecting weld areas and grinding cracks will be paid for according to Article 109.04 of the Standard Specifications.

Slipforming of the parapets is not allowed.

The embankment configuration shown shall be the minimum that must be placed and compacted prior to construction of the abutments.

Cleaning and painting of the existing and new structural steel shall be as specified in the special provision for "Cleaning and Painting Existing Steel Structures". All existing and new beams, bearings and other structural steel shall be cleaned per Near White Blast Cleaning - SSPC- SP10. Cost of cleaning and painting existing and new structural steel shall be inlcuded in Cleaning and Painting Steel Bridge No. 1.

The designated areas cleaned per Near White Blast Cleaning shall be painted according to the requirements of OZ/E/U. The color of the final finish coat for all interior steel surfaces shall be Gray, Munsell No 5B 7/1. The color of the final finish coat for the exterior and bottom flange of the fascia beams shall be Reddish-Brown, Munsell No 2.5YR 3/4.

The existing structural steel coating contains lead. The Contractor shall take appropriate precautions to address the presence of lead on this project.

Existing structural steel that will be in contact with new structural steel shall be cleaned and painted prior to erection as required by the Special Provision "Cleaning and Painting Contact Surface Areas of Existing Steel Structures," and the Standard Specifications. The color of the final finish coat for all interior surfaces shall be Gray, Munsell No. 5B 7/1. The color of the final finish coat for the exterior and bottom flange of the fascia beams shall be Reddish-Brown, Munsell No. 2.5YR 3/4. Cost included with Furnishing and Erecting Structural Steel.

Contractor shall ensure existing paint system is compatible with proposed paint systems for both existing and new structural steel.

Plan dimensions and details relative to the existing structure have been taken from existing plans and are subject to nominal construction variations. The Contractor shall field verify existing dimensions and details affecting new construction and make necessary approved adjustments prior to construction or ordering of materials. Such variations shall not be cause for additional compensation for a change in scope of the work; however, the Contractor will be paid for the quantity actually furnished at the unit price bid for the work.

Bearing seat surfaces shall be constructed or adjusted to the designated elevations within a tolerance of ⅛ in. (0.01 ft.). Adjustment shall be made either by grinding the surface or by shimming the bearings.

TOTAL BILL OF MATERIAL

ITEM	UNIT	SUPER	SUB	TOTAL
Concrete Removal	Cu. Yd.	-	15.2	15.2
Slope Wall Removal	Sq. Yd.	-	364	364
Removal of Existing Concrete Deck No. 1	Each	1	-	1
Protective Shield	Sq. Yd.	516	-	516
Structure Excavation	Cu. Yd.	-	112	112
Concrete Structures	Cu. Yd.	21.7	3.3	25.0
Concrete Superstructure	Cu. Yd.	343.5	-	343.5
Bridge Deck Grooving	Sq. Yd.	955	-	955
Protective Coat	Sq. Yd.	1,289	-	1,289
Concrete Superstructure (Approach Slab)	Cu. Yd.	87.2	-	87.2
Furnishing and Erecting Structural Steel	Pound	270	2,130	2,400
Stud Shear Connectors	Each	3,090	-	3,090
Reinforcement Bars, Epoxy Coated	Pound	119,170	380	119,550
Bridge Fence Railing, Curved	Foot	561	-	561
Slope Wall 4 Inch	Sq. Yd.	-	384	384
Name Plates	Each	-	1	1
Elastomeric Bearing Assembly, Type I	Each	-	10	10
Anchor Bolts, ¾"	Each	-	20	20
Granular Backfill for Structures	Cu. Yd.	-	101	101
Epoxy Crack Injection	Foot	-	115	115
Geocomposite Wall Drain	Sq. Yd.	-	50	50
Pipe Underdrains for Structures 4"	Foot	-	115	115
Bar Terminators	Each	218	-	218
Jack and Remove Existing Bearings	Each	-	10	10
Containment and Disposal of Lead Paint Cleaning Residues No. 1	L. Sum	1	-	1
Cleaning and Painting Steel Bridge No. 1	L. Sum	1	-	1
Structural Repair of Concrete (Depth Equal To or Less Than 5 Inches)	Sq. Ft.	-	17	17
Structural Repair of Concrete (Depth Greater Than 5 Inches)	Sq. Ft.	-	10	10
Temporary Shoring and Cribbing	Each	-	2	2

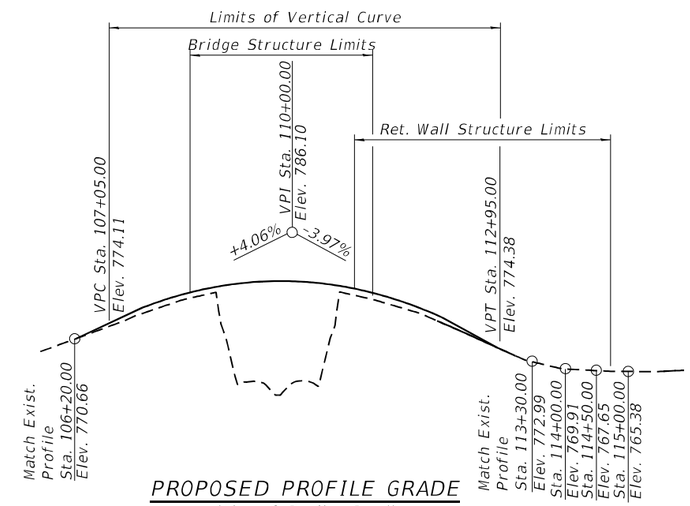

PROPOSED PROFILE GRADE

(Along ℄ Pauling Road)

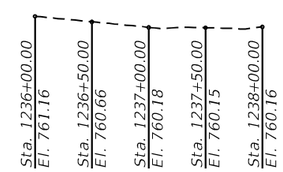

EXISTING PROFILE

(Along I-57 NB P.G.L.)

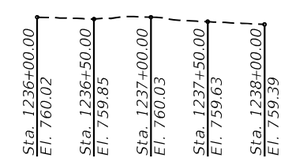

EXISTING PROFILE

(Along I-57 SB P.G.L.)

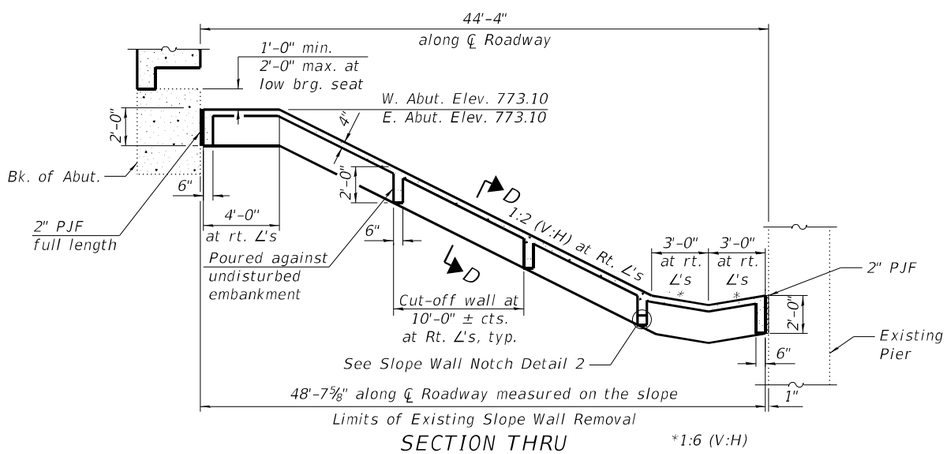

SECTION THRU CONCRETE SLOPE WALL

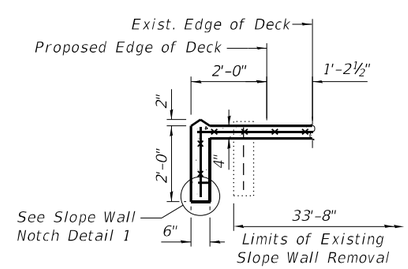

SECTION D-D

Notes:

Slope wall shall be reinforced with welded wire fabric, 6 in. x 6 in. - W4.0 x W4.0, weighing 58 lbs. per 100 sq. ft.

Contractor to verify locations of 1.5" IDOT underground electric utility and protect during construction. Dimensions of notch for west slope wall shall be verified by Contractor.

MODEL: Default
FILE NAME: pw:\\atlas-pw.bentley.com:atlas-pw-01\Documents\Projects\100110001 CV 008003\10 CAD\3_Sheets\12_Structural\D160R76-099024_002_GeneralData.dgn
3/7/2025 11:53:40 AM

AEG ATLAS ENGINEERING GROUP, LTD.

USER NAME =	DESIGNED - JJI	REVISED -	
	CHECKED - EH	REVISED -	
PLOT SCALE =	DRAWN - JJI	REVISED -	
PLOT DATE =	CHECKED - 3/3/2025	REVISED -	

STATE OF ILLINOIS
DEPARTMENT OF TRANSPORTATION

GENERAL DATA
STRUCTURE NO. 099-0204

SHEET SA-2 OF SA-28 SHEETS

F.A.I RTE.	SECTION	COUNTY	TOTAL SHEETS	SHEET NO.
57	99-1HB-2-BR	WILL	133	50
		CONTRACT NO. 60R76		
		ILLINOIS	FED. AID PROJECT	

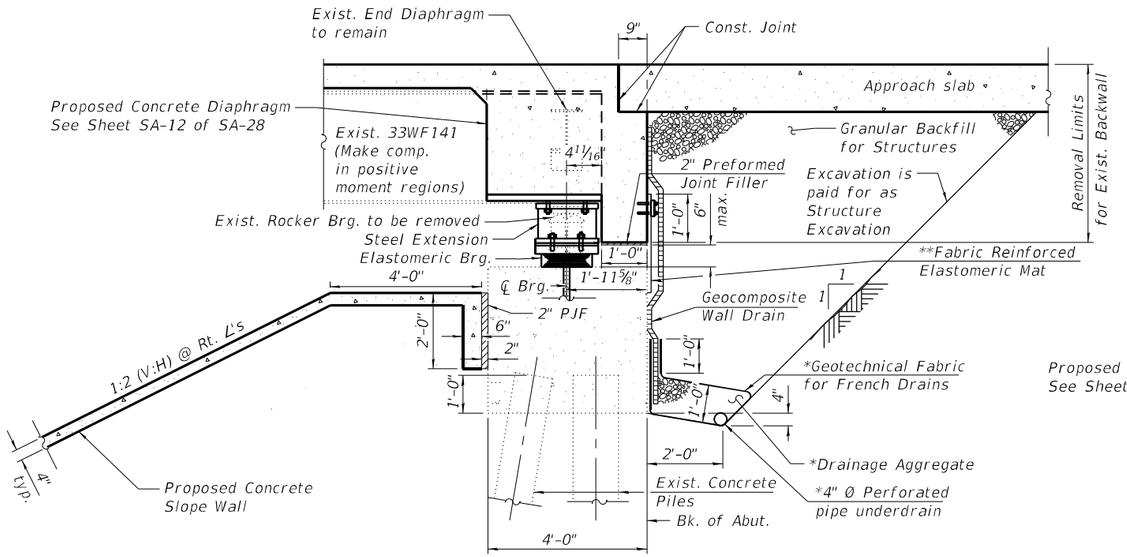

SECTION A-A
SECTION THRU SEMI-INTEGRAL ABUTMENT
(Horiz. dim. @ Rt. L's)

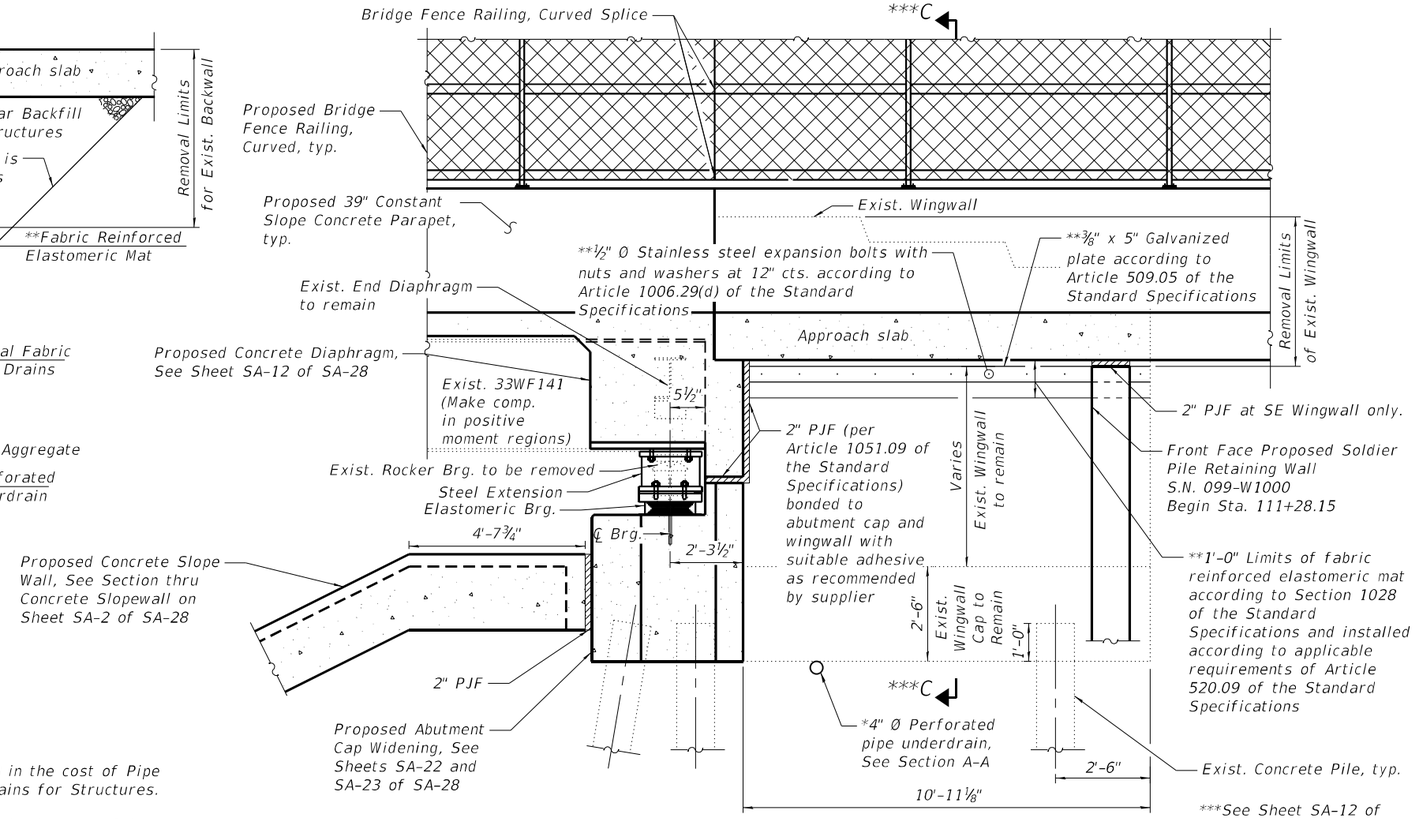

SECTION B-B
SECTION THRU SEMI-INTEGRAL ABUTMENT AT WINGWALL
(Horiz. dim. along ℄ Wingwall)
(Southeast Wingwall Shown, Others Similar)

Note:
All drainage system components shall extend parallel to the abutment back wall until they intersect the wingwalls. The pipe shall extend under the wingwalls until intersecting the side slopes. The pipes shall drain into concrete headwalls. (See Article 601.05 of the Standard Specifications and Highway Standard 601101).

* Included in the cost of Pipe Underdrains for Structures.

** Included in the cost of Concrete Superstructure.

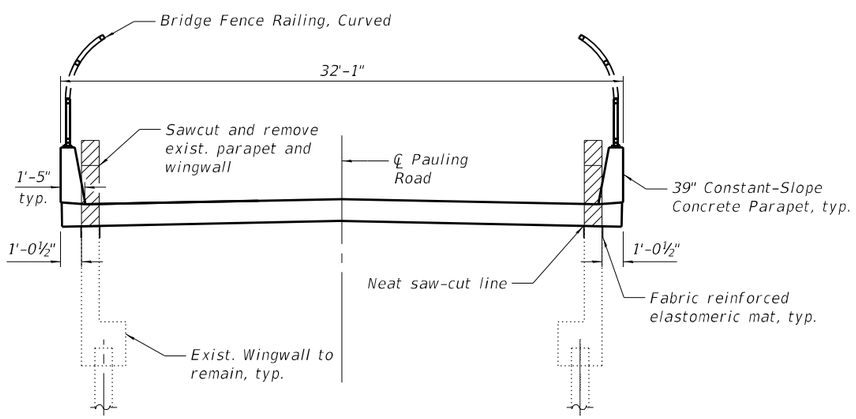

SECTION THROUGH APPROACH SLAB

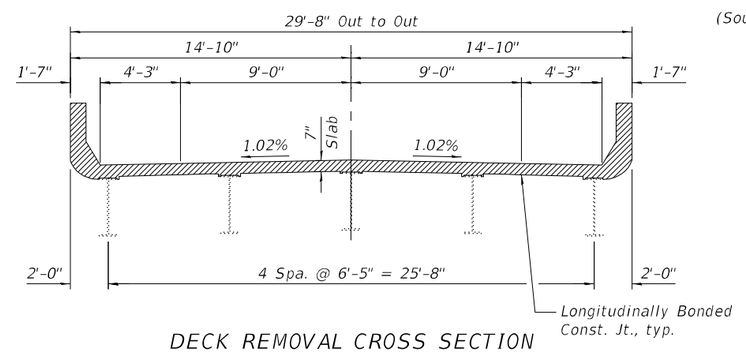

DECK REMOVAL CROSS SECTION
(Looking East)

LEGEND
Removal of Existing Concrete Deck No. 1

MODEL: Default
FILE NAME: pw:\\atlas-pw.bentley.com:atlas-pw-01\Documents\Projects\100111001 CV 008\0003\10 CAD\3_Sheets\12_Structural\D160R76-099024_003_GeneralData II
3/7/2025 11:53:49 AM

AEG ATLAS ENGINEERING GROUP, LTD.	USER NAME =	DESIGNED - JJI	REVISED -
		CHECKED - JKL	REVISED -
	PLOT SCALE =	DRAWN - JJI	REVISED -
	PLOT DATE =	CHECKED - 6/21/2024	REVISED -

STATE OF ILLINOIS
DEPARTMENT OF TRANSPORTATION

GENERAL DATA
STRUCTURE NO. 099-0204
SHEET SA-3 OF SA-28 SHEETS

F.A.I RTE.	SECTION	COUNTY	TOTAL SHEETS	SHEET NO.
57	99-1HB-2-BR	WILL	133	51
		CONTRACT NO. 60R76		
	ILLINOIS	FED. AID PROJECT		

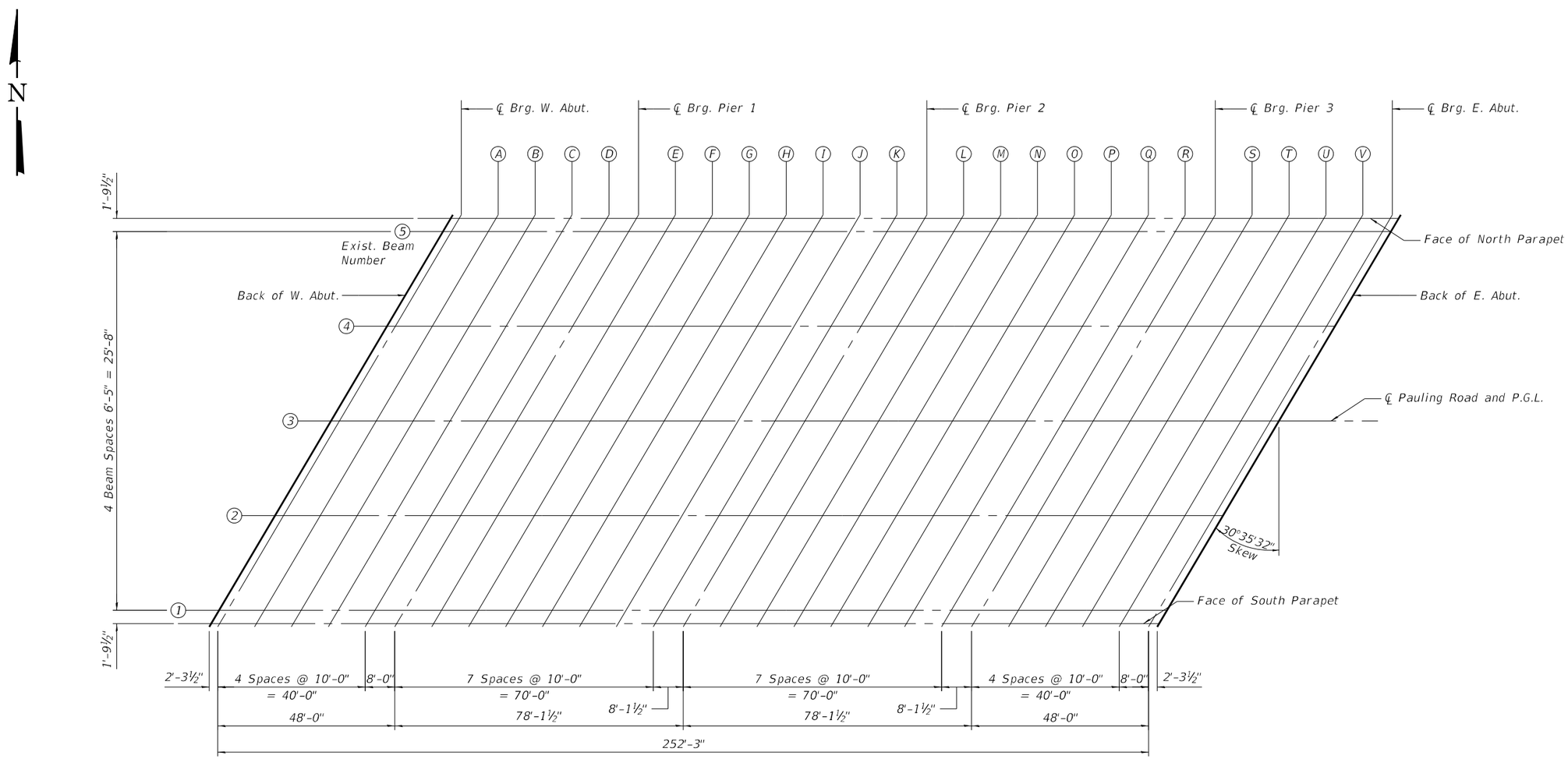

PLAN

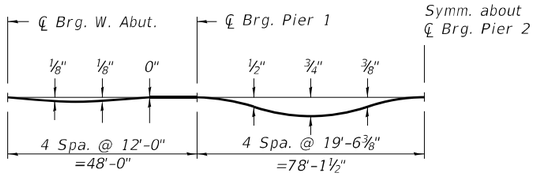

DEAD LOAD DEFLECTION DIAGRAM

(Includes weight of concrete only.)

Note:
The above deflections are not to be used in the field if the engineer is working from the grade elevations adjusted for dead load deflections as shown on Sheets SA-5 and SA-6 of SA-28.

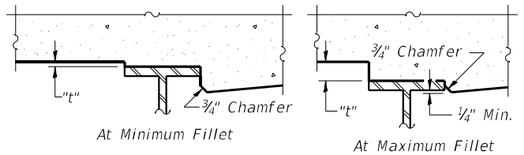

To determine "t": After all structural steel has been erected, elevations of the top flanges of the beams shall be taken at intervals shown above. These elevations subtracted from the "Theoretical Grade Elevations Adjusted for Dead Load Deflection" shown on Sheets SA-5 and SA-6 of SA-28, minus slab thickness, equals the fillet heights "t" above top flange of beams.

FILLET HEIGHTS

MODEL: Default
FILE NAME: pw:\\atlas-pw.bentley.com:atlas-pw-01\Documents\Projects\1001\1001 CV 008\003\10 CAD\3_Sheets\12_Structural\D160R76-099024_004_TODE.dgn

AEG ATLAS ENGINEERING GROUP, LTD.	USER NAME =	DESIGNED - JJI	REVISED -	STATE OF ILLINOIS DEPARTMENT OF TRANSPORTATION	TOP OF DECK ELEVATIONS STRUCTURE NO. 099-0204	F.A.I RTE.	SECTION	COUNTY	TOTAL SHEETS / SHEET NO.
		CHECKED - JKL	REVISED -			57	99-1HB-2-BR	WILL	133 / 52
	PLOT SCALE =	DRAWN - JJI	REVISED -			CONTRACT NO. 60R76			
	PLOT DATE =	CHECKED - 12/18/2024	REVISED -		SHEET SA-4 OF SA-28 SHEETS	ILLINOIS	FED. AID PROJECT		

3/7/2025 11:53:58 AM

FACE OF SOUTH PARAPET

Location	Station	Offset	Theoretical Grade Elevations	Theoretical Grade Elevations Adjusted For Dead Load Deflection
Bk. of W. Abut.	108+63.04	14.63	778.59	778.59
℄ Brg. W. Abut.	108+65.33	14.63	778.64	778.64
A	108+75.33	14.63	778.82	778.83
B	108+85.33	14.63	778.99	778.99
C	108+95.33	14.63	779.14	779.14
D	109+05.33	14.63	779.28	779.28
℄ Brg. Pier 1	109+13.33	14.63	779.38	779.38
E	109+23.33	14.63	779.50	779.52
F	109+33.33	14.63	779.60	779.64
G	109+43.33	14.63	779.69	779.75
H	109+53.33	14.63	779.77	779.83
I	109+63.33	14.63	779.83	779.88
J	109+73.33	14.63	779.87	779.90
K	109+83.33	14.63	779.91	779.92
℄ Brg. Pier 2	109+91.45	14.63	779.93	779.93
L	110+01.45	14.63	779.94	779.95
M	110+11.45	14.63	779.93	779.97
N	110+21.45	14.63	779.91	779.97
O	110+31.45	14.63	779.88	779.95
P	110+41.45	14.63	779.84	779.89
Q	110+51.45	14.63	779.78	779.82
R	110+61.45	14.63	779.71	779.72
℄ Brg. Pier 3	110+69.58	14.63	779.64	779.64
S	110+79.58	14.63	779.54	779.54
T	110+89.58	14.63	779.43	779.43
U	110+99.58	14.63	779.31	779.31
V	111+09.58	14.63	779.17	779.17
℄ Brg. E. Abut.	111+17.58	14.63	779.05	779.05
Bk. of E. Abut.	111+19.87	14.63	779.01	779.01

BEAM NO. 1

Location	Station	Offset	Theoretical Grade Elevations	Theoretical Grade Elevations Adjusted For Dead Load Deflection
Bk. of W. Abut.	108+64.10	12.83	778.65	778.65
℄ Brg. W. Abut.	108+66.39	12.83	778.69	778.69
A	108+76.39	12.83	778.87	778.88
B	108+86.39	12.83	779.04	779.05
C	108+96.39	12.83	779.19	779.19
D	109+06.39	12.83	779.33	779.33
℄ Brg. Pier 1	109+14.39	12.83	779.43	779.43
E	109+24.39	12.83	779.55	779.57
F	109+34.39	12.83	779.65	779.69
G	109+44.39	12.83	779.73	779.79
H	109+54.39	12.83	779.81	779.87
I	109+64.39	12.83	779.87	779.92
J	109+74.39	12.83	779.91	779.94
K	109+84.39	12.83	779.95	779.95
℄ Brg. Pier 2	109+92.51	12.83	779.96	779.96
L	110+02.51	12.83	779.97	779.98
M	110+12.51	12.83	779.97	780.00
N	110+22.51	12.83	779.95	780.00
O	110+32.51	12.83	779.91	779.98
P	110+42.51	12.83	779.87	779.92
Q	110+52.51	12.83	779.81	779.85
R	110+62.51	12.83	779.73	779.75
℄ Brg. Pier 3	110+70.64	12.83	779.66	779.66
S	110+80.64	12.83	779.56	779.56
T	110+90.64	12.83	779.45	779.46
U	111+00.64	12.83	779.33	779.33
V	111+10.64	12.83	779.19	779.19
℄ Brg. E. Abut.	111+18.64	12.83	779.07	779.07
Bk. of E. Abut.	111+20.93	12.83	779.03	779.03

BEAM NO. 2

Location	Station	Offset	Theoretical Grade Elevations	Theoretical Grade Elevations Adjusted For Dead Load Deflection
Bk. of W. Abut.	108+67.89	6.42	778.83	778.83
℄ Brg. W. Abut.	108+70.18	6.42	778.87	778.87
A	108+80.18	6.42	779.04	779.05
B	108+90.18	6.42	779.20	779.21
C	109+00.18	6.42	779.35	779.35
D	109+10.18	6.42	779.49	779.48
℄ Brg. Pier 1	109+18.18	6.42	779.58	779.58
E	109+28.18	6.42	779.69	779.71
F	109+38.18	6.42	779.79	779.83
G	109+48.18	6.42	779.87	779.93
H	109+58.18	6.42	779.94	780.00
I	109+68.18	6.42	779.99	780.04
J	109+78.18	6.42	780.03	780.06
K	109+88.18	6.42	780.06	780.07
℄ Brg. Pier 2	109+96.31	6.42	780.07	780.07
L	110+06.31	6.42	780.08	780.09
M	110+16.31	6.42	780.07	780.10
N	110+26.31	6.42	780.04	780.10
O	110+36.31	6.42	780.00	780.07
P	110+46.31	6.42	779.95	780.01
Q	110+56.31	6.42	779.89	779.93
R	110+66.31	6.42	779.81	779.82
℄ Brg. Pier 3	110+74.43	6.42	779.73	779.73
S	110+84.43	6.42	779.63	779.63
T	110+94.43	6.42	779.51	779.52
U	111+04.43	6.42	779.38	779.39
V	111+14.43	6.42	779.24	779.24
℄ Brg. E. Abut.	111+22.43	6.42	779.11	779.11
Bk. of E. Abut.	111+24.72	6.42	779.07	779.07

BEAM NO. 3, PROFILE GRADE LINE, & ℄ PAULING ROAD

Location	Station	Offset	Theoretical Grade Elevations	Theoretical Grade Elevations Adjusted For Dead Load Deflection
Bk. of W. Abut.	108+71.68	0.00	778.99	778.99
℄ Brg. W. Abut.	108+73.98	0.00	779.03	779.03
A	108+83.98	0.00	779.20	779.21
B	108+93.98	0.00	779.36	779.37
C	109+03.98	0.00	779.50	779.50
D	109+13.98	0.00	779.63	779.63
℄ Brg. Pier 1	109+21.98	0.00	779.72	779.72
E	109+31.98	0.00	779.83	779.85
F	109+41.98	0.00	779.92	779.96
G	109+51.98	0.00	779.99	780.05
H	109+61.98	0.00	780.06	780.12
I	109+71.98	0.00	780.11	780.16
J	109+81.98	0.00	780.14	780.17
K	109+91.98	0.00	780.16	780.17
℄ Brg. Pier 2	110+00.10	0.00	780.17	780.17
L	110+10.10	0.00	780.17	780.18
M	110+20.10	0.00	780.15	780.19
N	110+30.10	0.00	780.12	780.18
O	110+40.10	0.00	780.08	780.15
P	110+50.10	0.00	780.02	780.08
Q	110+60.10	0.00	779.95	779.99
R	110+70.10	0.00	779.87	779.88
℄ Brg. Pier 3	110+78.23	0.00	779.79	779.79
S	110+88.23	0.00	779.68	779.68
T	110+98.23	0.00	779.56	779.56
U	111+08.23	0.00	779.42	779.43
V	111+18.23	0.00	779.27	779.28
℄ Brg. E. Abut.	111+26.23	0.00	779.15	779.15
Bk. of E. Abut.	111+28.52	0.00	779.11	779.11

BEAM NO. 4

Location	Station	Offset	Theoretical Grade Elevations	Theoretical Grade Elevations Adjusted For Dead Load Deflection
Bk. of W. Abut.	108+75.48	-6.42	778.96	778.96
℄ Brg. W. Abut.	108+77.77	-6.42	779.00	779.00
A	108+87.77	-6.42	779.17	779.17
B	108+97.77	-6.42	779.32	779.32
C	109+07.77	-6.42	779.45	779.46
D	109+17.77	-6.42	779.58	779.58
℄ Brg. Pier 1	109+25.77	-6.42	779.67	779.67
E	109+35.77	-6.42	779.77	779.79
F	109+45.77	-6.42	779.85	779.89
G	109+55.77	-6.42	779.92	779.98
H	109+65.77	-6.42	779.98	780.04
I	109+75.77	-6.42	780.03	780.07
J	109+85.77	-6.42	780.06	780.08
K	109+95.77	-6.42	780.07	780.08
℄ Brg. Pier 2	110+03.89	-6.42	780.08	780.08
L	110+13.89	-6.42	780.07	780.08
M	110+23.89	-6.42	780.05	780.08
N	110+33.89	-6.42	780.01	780.07
O	110+43.89	-6.42	779.97	780.03
P	110+53.89	-6.42	779.90	779.96
Q	110+63.89	-6.42	779.83	779.87
R	110+73.89	-6.42	779.74	779.75
℄ Brg. Pier 3	110+82.02	-6.42	779.66	779.66
S	110+92.02	-6.42	779.54	779.54
T	111+02.02	-6.42	779.41	779.42
U	111+12.02	-6.42	779.27	779.28
V	111+22.02	-6.42	779.12	779.12
℄ Brg. E. Abut.	111+30.02	-6.42	778.98	778.98
Bk. of E. Abut.	111+32.31	-6.42	778.94	778.94

BEAM NO. 5

Location	Station	Offset	Theoretical Grade Elevations	Theoretical Grade Elevations Adjusted For Dead Load Deflection
Bk. of W. Abut.	108+79.27	-12.83	778.92	778.92
℄ Brg. W. Abut.	108+81.56	-12.83	778.96	778.96
A	108+91.56	-12.83	779.12	779.13
B	109+01.56	-12.83	779.27	779.27
C	109+11.56	-12.83	779.40	779.40
D	109+21.56	-12.83	779.52	779.51
℄ Brg. Pier 1	109+29.56	-12.83	779.60	779.60
E	109+39.56	-12.83	779.69	779.71
F	109+49.56	-12.83	779.77	779.82
G	109+59.56	-12.83	779.84	779.90
H	109+69.56	-12.83	779.89	779.96
I	109+79.56	-12.83	779.93	779.98
J	109+89.56	-12.83	779.96	779.99
K	109+99.56	-12.83	779.97	779.98
℄ Brg. Pier 2	110+07.69	-12.83	779.97	779.97
L	110+17.69	-12.83	779.96	779.97
M	110+27.69	-12.83	779.93	779.97
N	110+37.69	-12.83	779.89	779.95
O	110+47.69	-12.83	779.84	779.90
P	110+57.69	-12.83	779.77	779.83
Q	110+67.69	-12.83	779.69	779.73
R	110+77.69	-12.83	779.60	779.61
℄ Brg. Pier 3	110+85.81	-12.83	779.51	779.51
S	110+95.81	-12.83	779.39	779.39
T	111+05.81	-12.83	779.26	779.26
U	111+15.81	-12.83	779.11	779.12
V	111+25.81	-12.83	778.95	778.96
℄ Brg. E. Abut.	111+33.81	-12.83	778.81	778.81
Bk. of E. Abut.	111+36.10	-12.83	778.77	778.77

FACE OF NORTH PARAPET

Location	Station	Offset	Theoretical Grade Elevations	Theoretical Grade Elevations Adjusted For Dead Load Deflection
Bk. of W. Abut.	108+80.32	-14.63	778.90	778.90
℄ Brg. W. Abut.	108+82.62	-14.63	778.94	778.94
A	108+92.62	-14.63	779.10	779.11
B	109+02.62	-14.63	779.24	779.25
C	109+12.62	-14.63	779.37	779.38
D	109+22.62	-14.63	779.49	779.49
℄ Brg. Pier 1	109+30.62	-14.63	779.58	779.58
E	109+40.62	-14.63	779.67	779.69
F	109+50.62	-14.63	779.75	779.79
G	109+60.62	-14.63	779.81	779.87
H	109+70.62	-14.63	779.86	779.92
I	109+80.62	-14.63	779.90	779.95
J	109+90.62	-14.63	779.92	779.95
K	110+00.62	-14.63	779.94	779.94
℄ Brg. Pier 2	110+08.75	-14.63	779.93	779.93
L	110+18.75	-14.63	779.92	779.93
M	110+28.75	-14.63	779.89	779.93
N	110+38.75	-14.63	779.85	779.91
O	110+48.75	-14.63	779.80	779.86
P	110+58.75	-14.63	779.73	779.78
Q	110+68.75	-14.63	779.64	779.68
R	110+78.75	-14.63	779.55	779.56
℄ Brg. Pier 3	110+86.87	-14.63	779.46	779.46
S	110+96.87	-14.63	779.34	779.34
T	111+06.87	-14.63	779.21	779.21
U	111+16.87	-14.63	779.06	779.07
V	111+26.87	-14.63	778.90	778.90
℄ Brg. E. Abut.	111+34.87	-14.63	778.76	778.76
Bk. of E. Abut.	111+37.16	-14.63	778.72	778.72

NORTH EDGE OF SLAB

Location	Station	Offset	Theoretical Grade Elevations
W. End of W. Appr. Slab	108+51.50	-15.13	778.36
A1	108+61.50	-15.13	778.56
A2	108+72.04	-16.04	778.73
E. End of W. Appr. Slab	108+82.04	-16.04	778.90

NORTH CURB LINE

Location	Station	Offset	Theoretical Grade Elevations
W. End of W. Appr. Slab	108+51.21	-14.63	778.36
A1	108+61.21	-14.63	778.56
A2	108+71.21	-14.63	778.75
E. End of W. Appr. Slab	108+81.21	-14.63	778.92

℄ PAULING ROAD & P.G.L.

Location	Station	Offset	Theoretical Grade Elevations
W. End of W. Appr. Slab	108+42.56	00.00	778.41
A1	108+52.56	00.00	778.62
A2	108+62.56	00.00	778.82
E. End of W. Appr. Slab	108+72.56	00.00	779.01

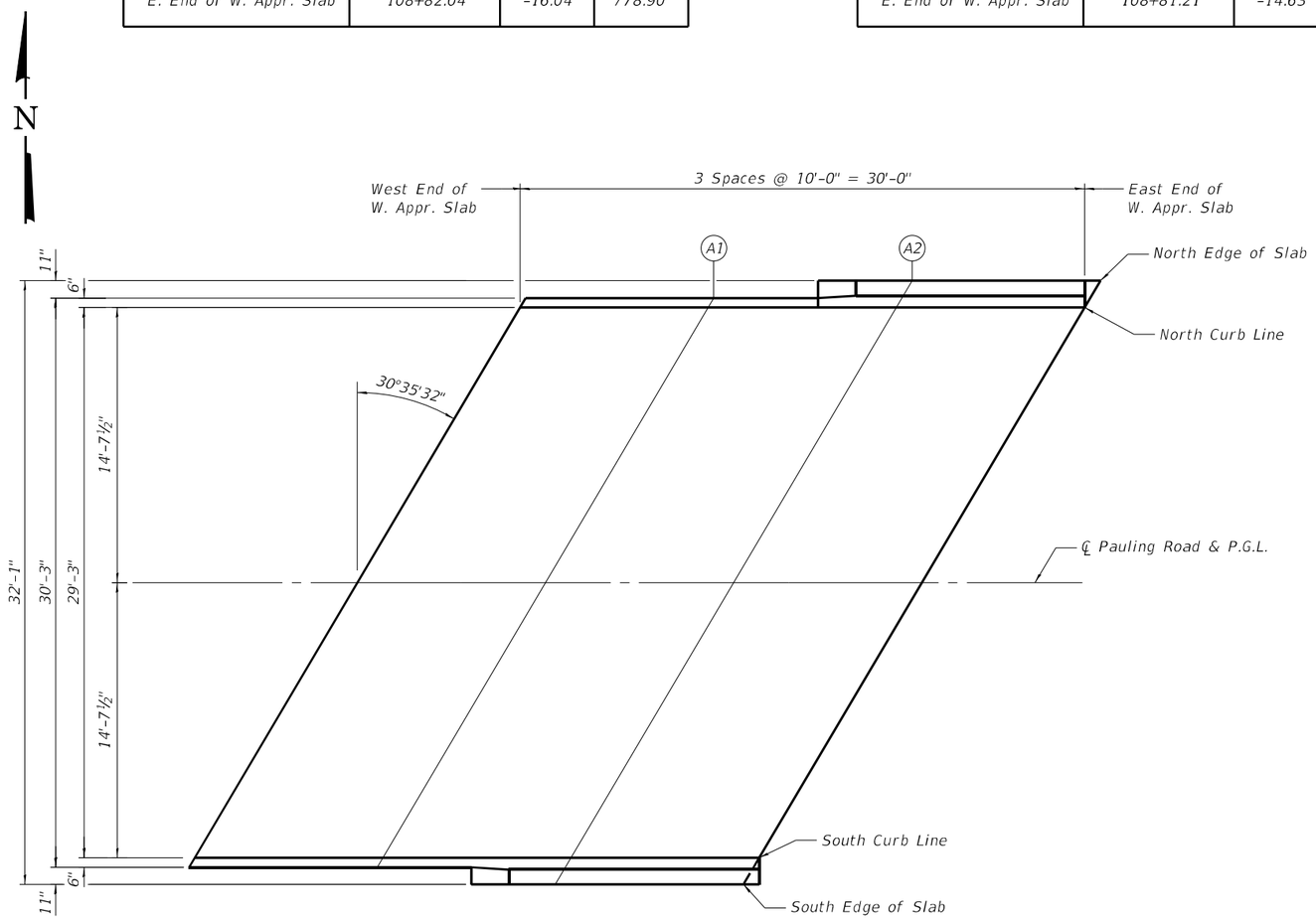

PLAN

(West Approach Slab)

SOUTH CURB LINE

Location	Station	Offset	Theoretical Grade Elevations
W. End of W. Appr. Slab	108+33.91	14.63	777.98
A1	108+43.91	14.63	778.20
A2	108+53.91	14.63	778.41
E. End of W. Appr. Slab	108+63.91	14.63	778.61

SOUTH EDGE OF SLAB

Location	Station	Offset	Theoretical Grade Elevations
W. End of W. Appr. Slab	108+33.62	15.13	777.96
A1	108+43.62	15.13	778.19
A2	108+53.08	16.04	778.37
E. End of W. Appr. Slab	108+63.08	16.04	778.57

NORTH EDGE OF SLAB

Location	Station	Offset	Theoretical Grade Elevations
W. End of E. Appr. Slab	111+37.12	-16.04	778.69
A3	111+47.12	-16.04	778.50
A4	111+56.58	-15.13	778.33
E. End of E. Appr. Slab	111+66.58	-15.13	778.11

NORTH CURB LINE

Location	Station	Offset	Theoretical Grade Elevations
W. End of E. Appr. Slab	111+36.29	-14.63	778.73
A3	111+46.29	-14.63	778.54
A4	111+56.29	-14.63	778.34
E. End of E. Appr. Slab	111+66.29	-14.63	778.13

℄ PAULING ROAD & P.G.L.

Location	Station	Offset	Theoretical Grade Elevations
W. End of E. Appr. Slab	111+27.64	00.00	779.12
A3	111+37.64	00.00	778.95
A4	111+47.64	00.00	778.76
E. End of E. Appr. Slab	111+57.64	00.00	778.55

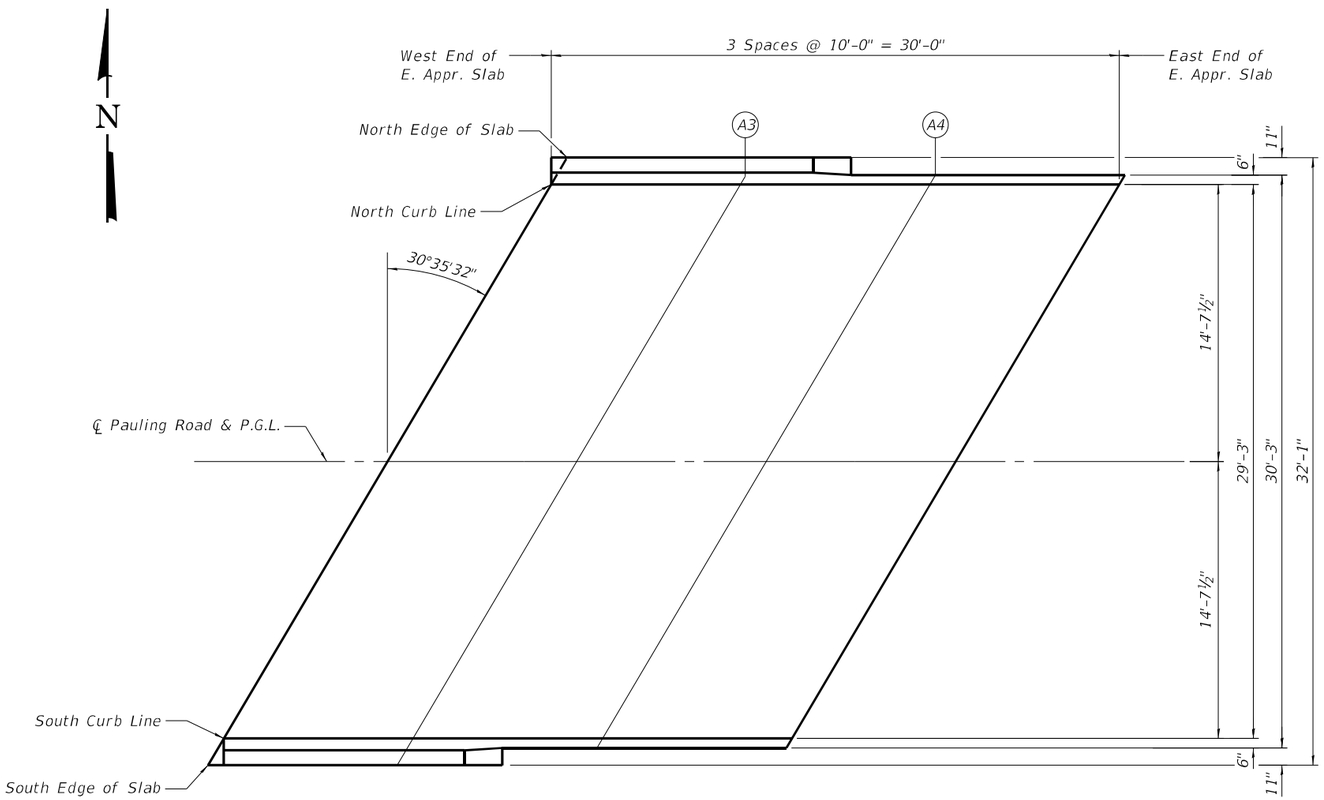

PLAN
(East Approach Slab)

SOUTH CURB LINE

Location	Station	Offset	Theoretical Grade Elevations
W. End of E. Appr. Slab	111+18.99	14.63	779.03
A3	111+28.99	14.63	778.86
A4	111+38.99	14.63	778.68
E. End of E. Appr. Slab	111+48.99	14.63	778.49

SOUTH EDGE OF SLAB

Location	Station	Offset	Theoretical Grade Elevations
W. End of E. Appr. Slab	111+18.16	16.04	779.01
A3	111+28.16	16.04	778.85
A4	111+38.70	15.13	778.68
E. End of E. Appr. Slab	111+48.70	15.13	778.49

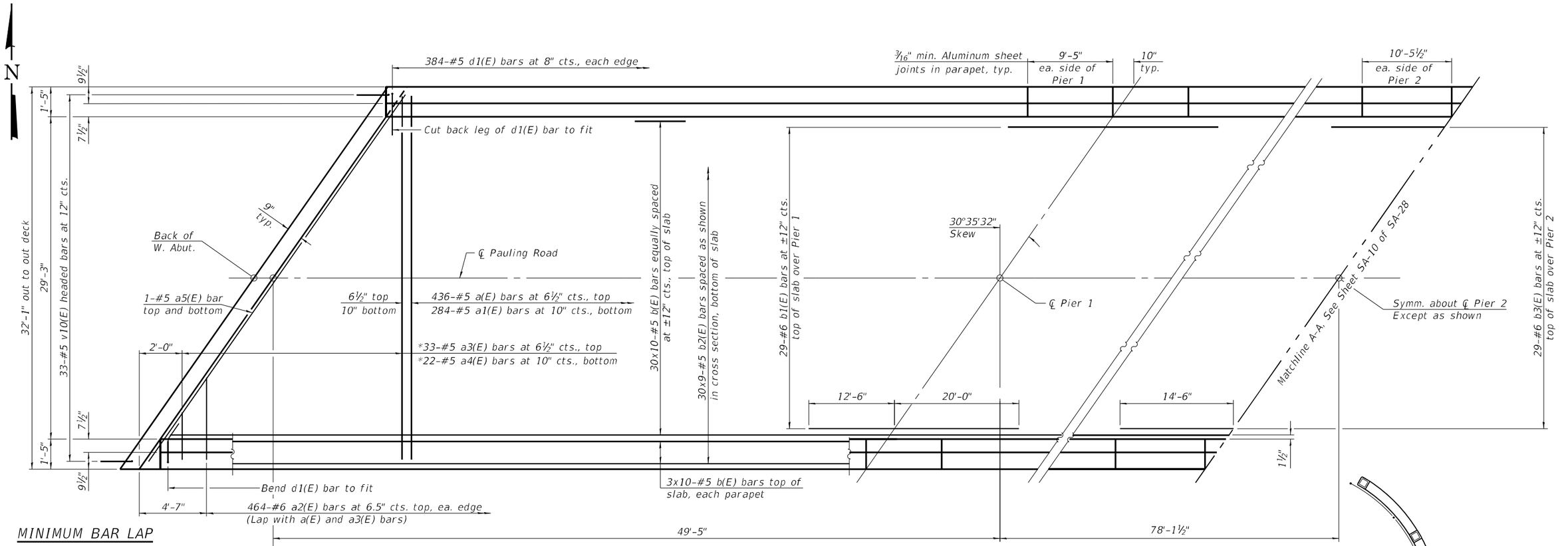

MINIMUM BAR LAP

#4 bar = 2'-5"
#5 bar = 3'-6"

* See Field Cutting Diagram on Sheet SA-11 of SA-28.

PARTIAL PLAN

Notes:
See sheets SA-10 and SA-11 of SA-28 for superstructure details and Bill of Material.
Bars indicated thus 20 x 3-#5 etc. indicates 20 lines of bars with 3 lengths per line.

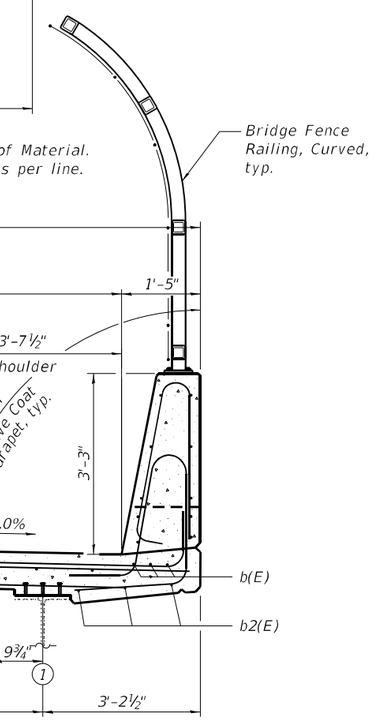

NEAR PIER

CROSS SECTION

(Looking East)

NEAR MIDSPAN

AEG ATLAS ENGINEERING GROUP, LTD.	USER NAME =	DESIGNED - JJI	REVISED -	STATE OF ILLINOIS DEPARTMENT OF TRANSPORTATION	SUPERSTRUCTURE STRUCTURE NO. 099-0204	F.A.I RTE. 57	SECTION 99-1HB-2-BR
	PLOT SCALE =	CHECKED - EH	REVISED -			COUNTY WILL	TOTAL SHEETS 133
	PLOT DATE =	DRAWN - JJI	REVISED -			SHEET NO. 57	CONTRACT NO. 60R76
		CHECKED - 10/3/2024	REVISED -		SHEET SA-9 OF SA-28 SHEETS	ILLINOIS	FED. AID PROJECT

MODEL: Default
FILE NAME: pw:\\atlas-pw.bentley.com:atlas-pw-01\Documents\Projects\100111001 CV 008\0031\10 CAD\3_Sheets\12_Structural\D160R76-099024_009_Superstructure1
3/7/2025 11:54:37 AM

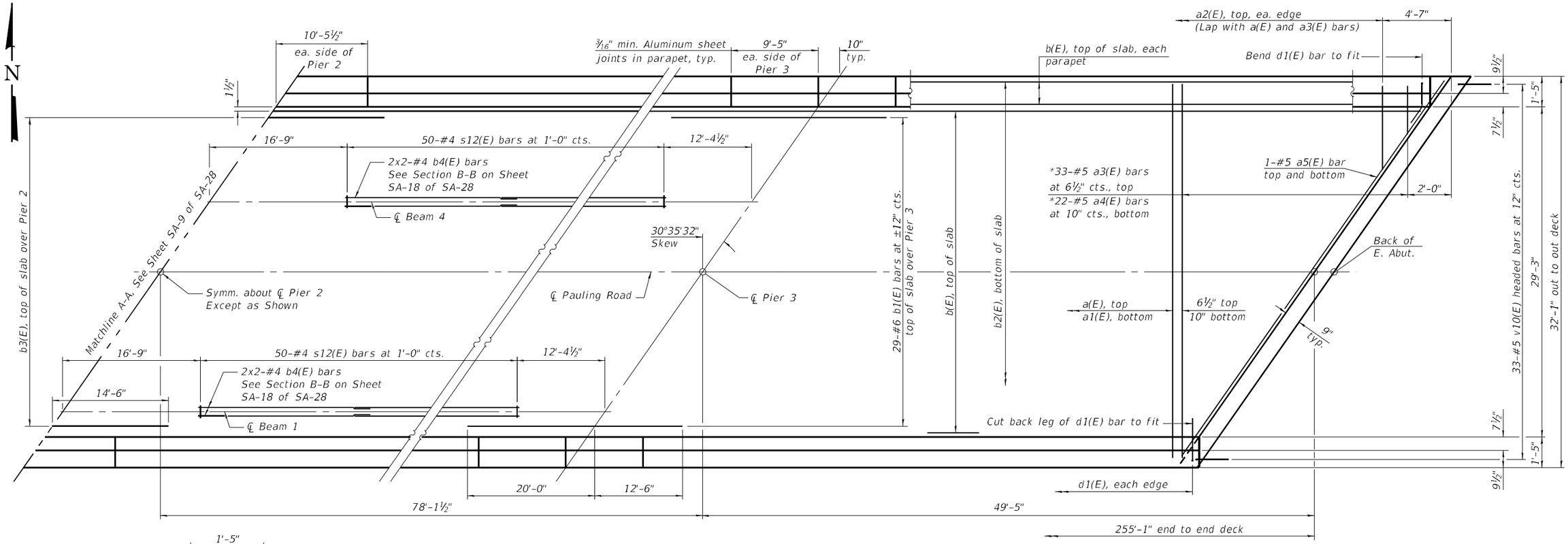

PARTIAL PLAN

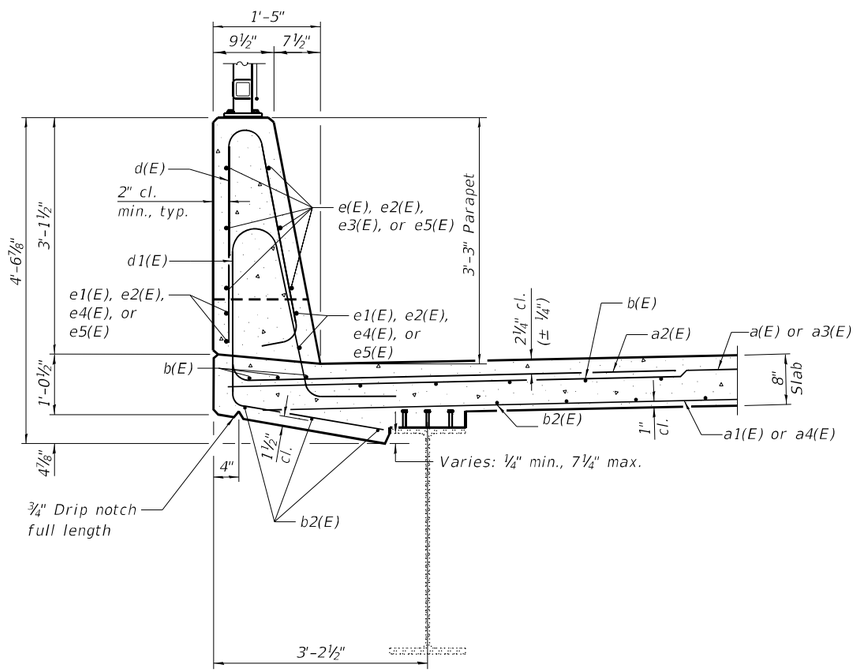

SECTION THRU PARAPET

Notes:
See sheet SA-11 of SA-28 for superstructure details and Bill of Material.
Bars indicated thus 20 x 3-#5 etc. indicates 20 lines of bars with 3 lengths per line.
For bar details not shown, see Sheet SA-09 of SA-28.

MINIMUM BAR LAP

#4 bar = 2'-5"
#5 bar = 3'-6"

* See Field Cutting Diagram on Sheet SA-11 of SA-28.

MODEL: Default
FILE NAME: pw:\\atlas-pw.bentley.com:atlas-pw-01\Documents\Projects\100111001 CV 008\003\10 CAD\3_Sheets\2_Structural\D160R76-099024_010_Superstructure.dgn
3/7/2025 11:54:46 AM

AEG ATLAS ENGINEERING GROUP, LTD.	USER NAME =	DESIGNED - JJI	REVISED -
		CHECKED - EH	REVISED -
	PLOT SCALE =	DRAWN - JJI	REVISED -
	PLOT DATE =	CHECKED - 10/3/2024	REVISED -

STATE OF ILLINOIS
DEPARTMENT OF TRANSPORTATION

SUPERSTRUCTURE
STRUCTURE NO. 099-0204
SHEET SA-10 OF SA-28 SHEETS

F.A.I RTE.	SECTION	COUNTY	TOTAL SHEETS	SHEET NO.
57	99-1HB-2-BR	WILL	133	58
		CONTRACT NO. 60R76		
		ILLINOIS FED. AID PROJECT		

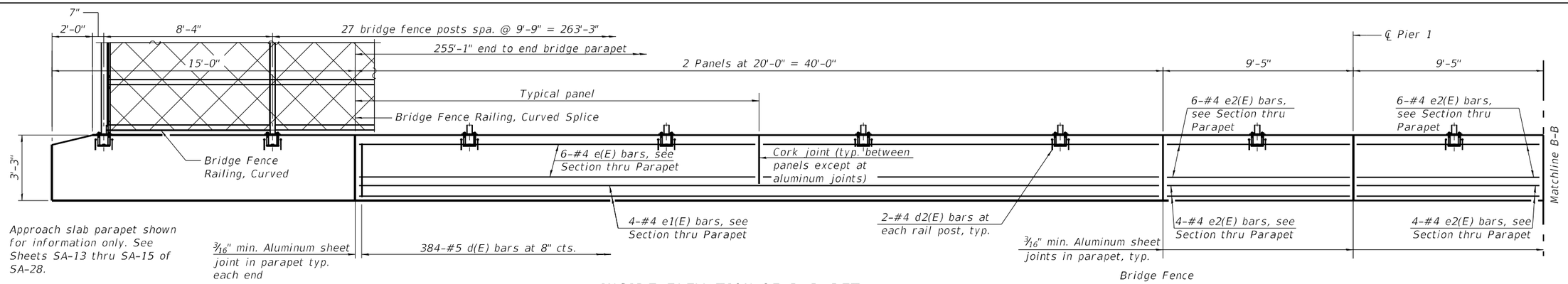

INSIDE ELEVATION OF PARAPET

(North shown, South mirrored)

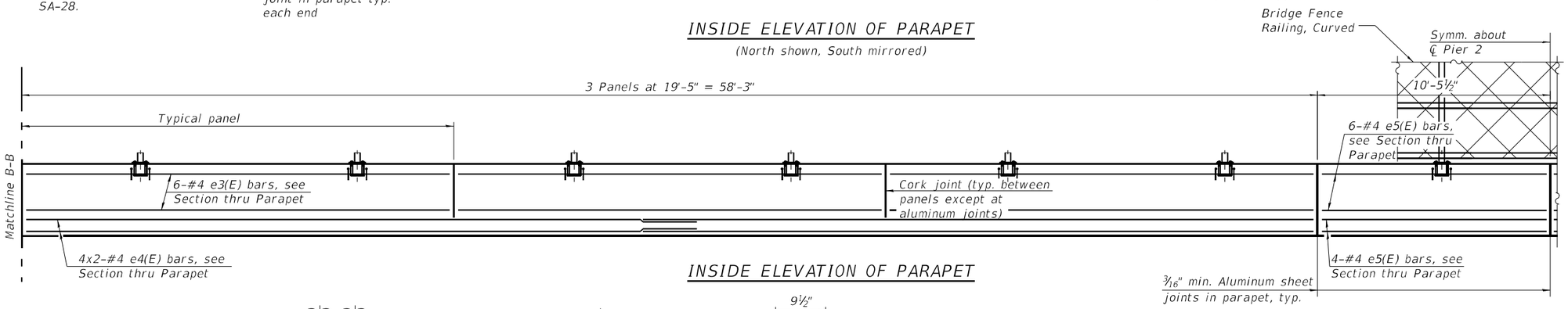

INSIDE ELEVATION OF PARAPET

SUPERSTRUCTURE BILL OF MATERIAL

Bar	No.	Size	Length	Shape
a(E)	436	#5	31'-9"	
a1(E)	284	#5	31'-1"	
a2(E)	928	#6	8'-4"	
a3(E)	33	#5	34'-9"	
a4(E)	22	#5	33'-1"	
a5(E)	4	#5	36'-10"	
b(E)	360	#5	28'-9"	
b1(E)	58	#6	32'-6"	
b2(E)	270	#5	31'-7"	
b3(E)	29	#6	29'-0"	
b4(E)	8	#4	26'-0"	
d(E)	768	#5	6'-5"	
d1(E)	768	#5	8'-9"	
d2(E)	120	#4	2'-0"	
e(E)	48	#4	19'-8"	
e1(E)	16	#4	39'-8"	
e2(E)	160	#4	9'-1"	
e3(E)	72	#4	19'-1"	
e4(E)	32	#4	30'-3"	
e5(E)	40	#4	27'-2"	
s10(E)	60	#5	7'-7"	
s11(E)	52	#5	9'-6"	
s12(E)	100	#4	5'-8"	
m10(E)	10	#6	36'-11"	
m11(E)	16	#6	7'-0"	
m12(E)	16	#6	7'-0"	
m13(E)	16	#6	3'-2"	
m14(E)	4	#4	36'-11"	
u10(E)	60	#4	5'-3"	
v10(E)	66	#5	3'-1"	
Reinforcement Bars, Epoxy Coated			Pound	80,780
Concrete Superstructure			Cu. Yd.	335.7
Bridge Deck Grooving			Sq. Yd.	773
Protective Coat			Sq. Yd.	1,061

Bars indicated thus 1x2-#4 etc. indicates 1 line of bars with 2 lengths per line.

MINIMUM BAR LAP

#4 bar = 2'-5"
#5 bar = 3'-6"

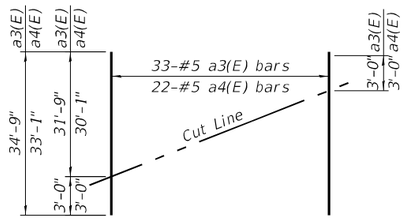

FIELD CUTTING DIAGRAM

Order a3(E) and a4(E) bars full length. Cut as shown and use remainder in opposite end of deck.

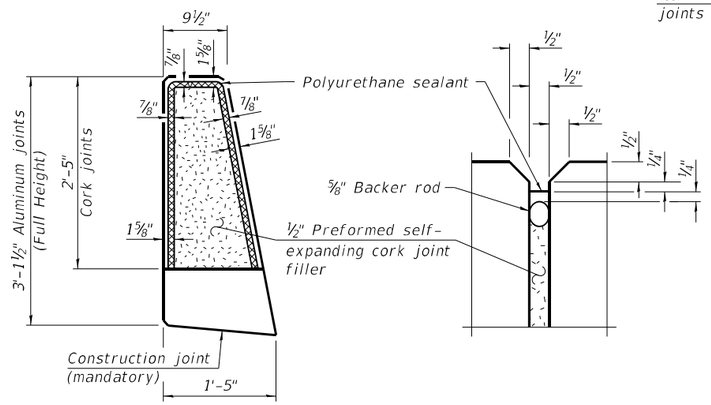

PARAPET JOINT DETAILS

Notes:

The 3/16" min. aluminum sheet shall be ASTM B209 alloy 3003-H14 and coated with 5 mils of either bitumen paint or epoxy paint to minimize reaction with wet concrete. Cost included with Concrete Superstructure.

The polyurethane sealant shall be according to Article 1050.04 of the Standard Specifications and the color shall be gray.

Splice Bridge Fence Railing, Curved at end of deck.

Bar Terminators paid for separately. See Total Bill of Material.

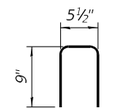

BAR d2(E)

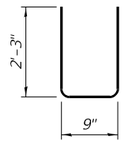

BAR u10(E)

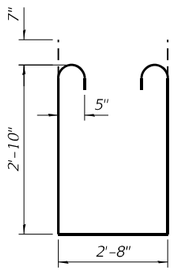

BAR s11(E)

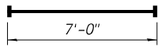

BAR m11(E)

(Headed. 32 - #6 Bar Terminators)

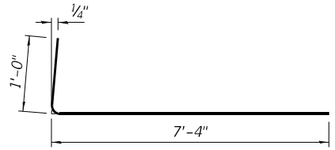

BAR a2(E)

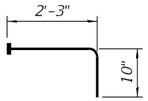

BAR v10(E)

(Headed. 66 - #5 Bar Terminators)

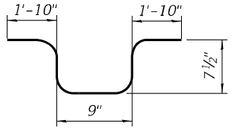

BAR s12(E)

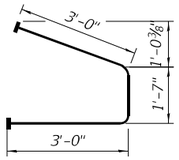

BAR s10(E)

(Headed. 120 - #5 Bar Terminators)

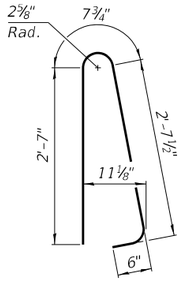

BAR d(E)

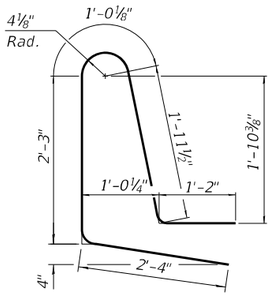

BAR d1E)

AEG ATLAS ENGINEERING GROUP, LTD.	USER NAME =	DESIGNED - JJI	REVISED -
		CHECKED - EH	REVISED -
	PLOT SCALE =	DRAWN - JJI	REVISED -
	PLOT DATE =	CHECKED - 10/3/2024	REVISED -

STATE OF ILLINOIS
DEPARTMENT OF TRANSPORTATION

SUPERSTRUCTURE DETAILS
STRUCTURE NO. 099-0204

SHEET SA-11 OF SA-28 SHEETS

F.A.I RTE.	SECTION	COUNTY	TOTAL SHEETS	SHEET NO.
57	99-1HB-2-BR	WILL	133	59
		CONTRACT NO. 60R76		
		ILLINOIS FED. AID PROJECT		

MODEL: Default
FILE NAME: pw:\\atlas-pw.bentley.com:atlas-pw-01\Documents\Projects\100\11001 CV 008\003\10 CAD\3_Sheets\12_Structural\D160R76-099024_011_SuperDetails

3/7/2025 11:54:54 AM

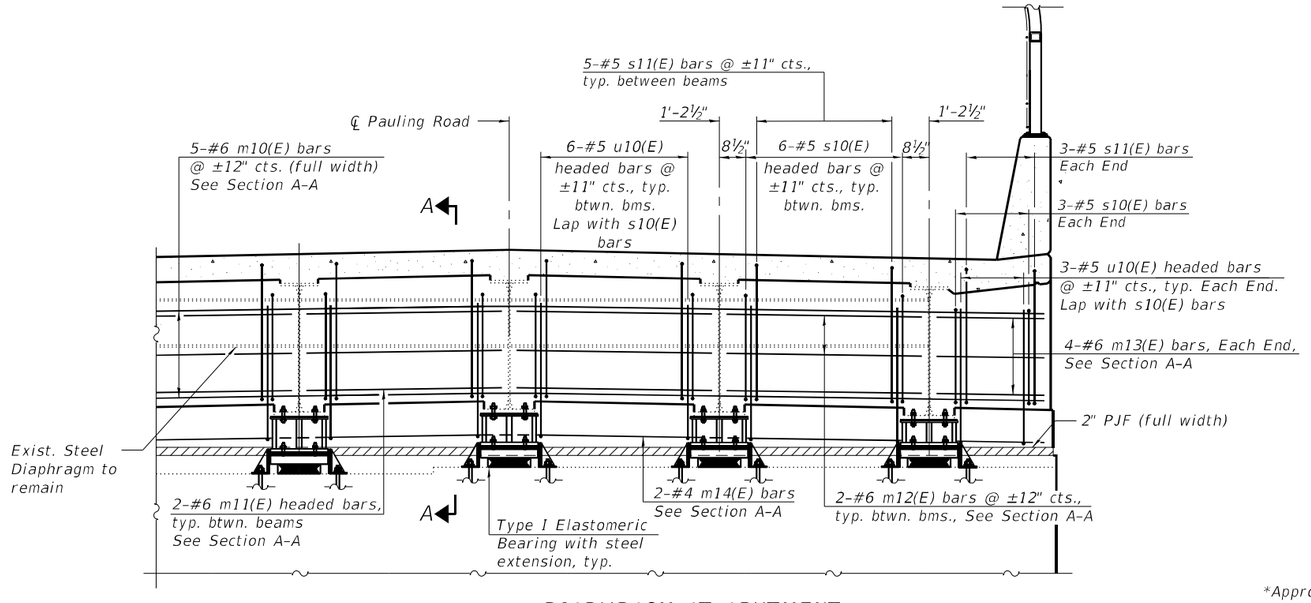

DIAPHRAGM AT ABUTMENT

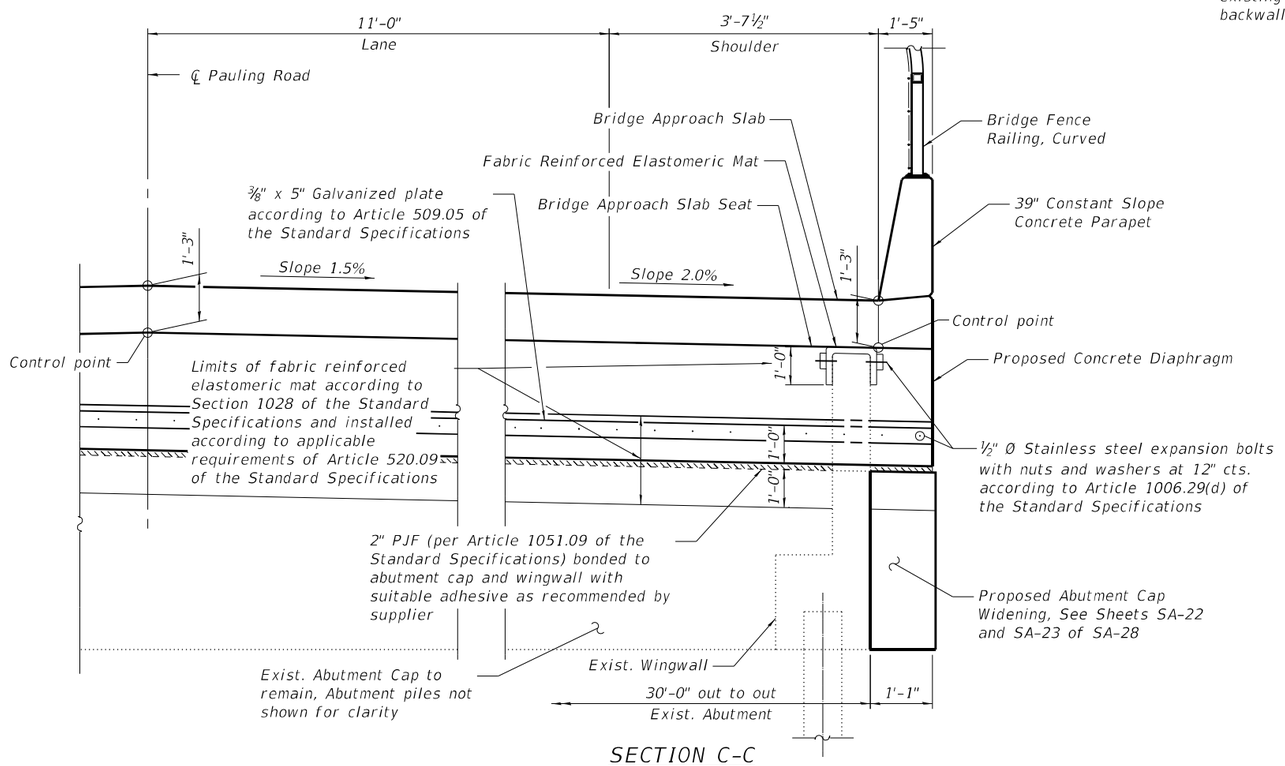

SECTION C-C

(Looking at back of abutment)
(Horiz. dim. at Rt. ∠'s)

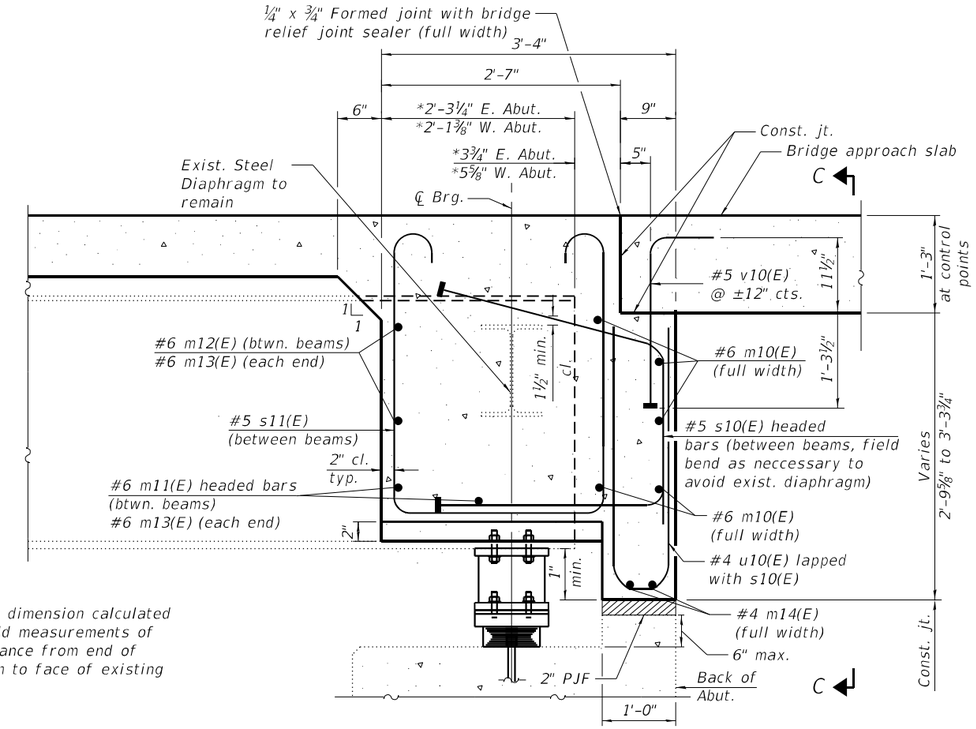

*Approximate dimension calculated based on field measurements of minimum distance from end of existing beam to face of existing backwall

SECTION A-A

(at Rt. ∠'s)

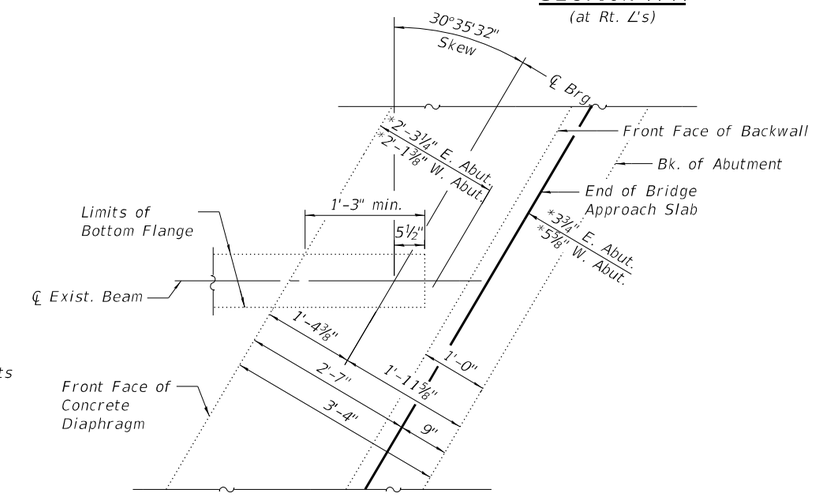

PLAN AT ABUTMENT

(Showing bottom flange of beam)

Notes:

See sheets SA-9 thru SA-11 of SA-28 for superstructure details and Bill of Material.

The s10(E), s11(E), u10(E), and v10(E) bars shall be placed parallel to the beams. Spacing for these bars shall be at right angles to the beams.

The approach slab seat shall have a constant slope determined from the control points shown.

Cost of fabric reinforced elastomeric mat, galvanized plate, stainless steel expansion bolts with nuts and washers and installation are included in the cost of Concrete Superstructure.

Bar Terminators paid for separately. See Total Bill of Material on Sheet SA-2 SA-28

MODEL: Default
FILE NAME: pw:\\atlas-pw.bentley.com:atlas-pw-01\Documents\Projects\1001\1001 CV 008\003\10 CAD\3_Sheets\12_Structural\D160R76-099024_012_DiaphragmDetails
3/7/2025 11:55:07 AM

AEG ATLAS ENGINEERING GROUP, LTD.	USER NAME =	DESIGNED - JJI	REVISED -
		CHECKED - JKL	REVISED -
	PLOT SCALE =	DRAWN - JJI	REVISED -
	PLOT DATE =	CHECKED - 6/21/2024	REVISED -

STATE OF ILLINOIS
DEPARTMENT OF TRANSPORTATION

DIAPHRAGM DETAILS
STRUCTURE NO. 099-0204

SHEET SA-12 OF SA-28 SHEETS

F.A.I RTE.	SECTION	COUNTY	TOTAL SHEETS	SHEET NO.
57	99-1HB-2-BR	WILL	133	60
		CONTRACT NO. 60R76		
		ILLINOIS FED. AID PROJECT		

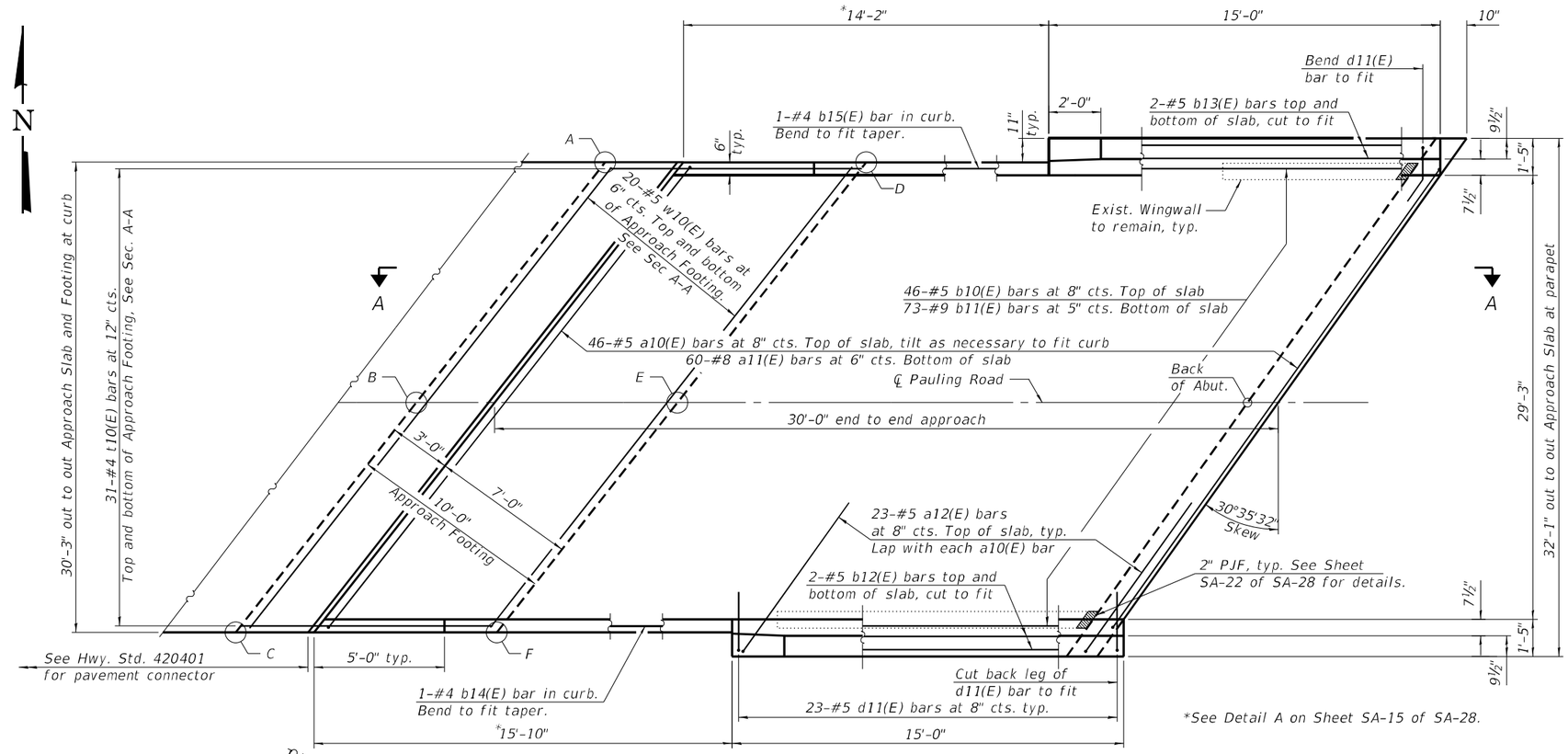

*See Detail A on Sheet SA-15 of SA-28.

WEST APPROACH PLAN

(Guardrail not shown)

TOP AND BOTTOM ELEVATIONS FOR WEST APPROACH FOOTING

West Approach		
Point/ Location	Top	Bottom
A-NW	777.03	776.20
B-CL	777.08	776.25
C-SW	776.63	775.80
D-NE	777.27	776.44
E-CL	777.34	776.50
F-SE	776.90	776.06

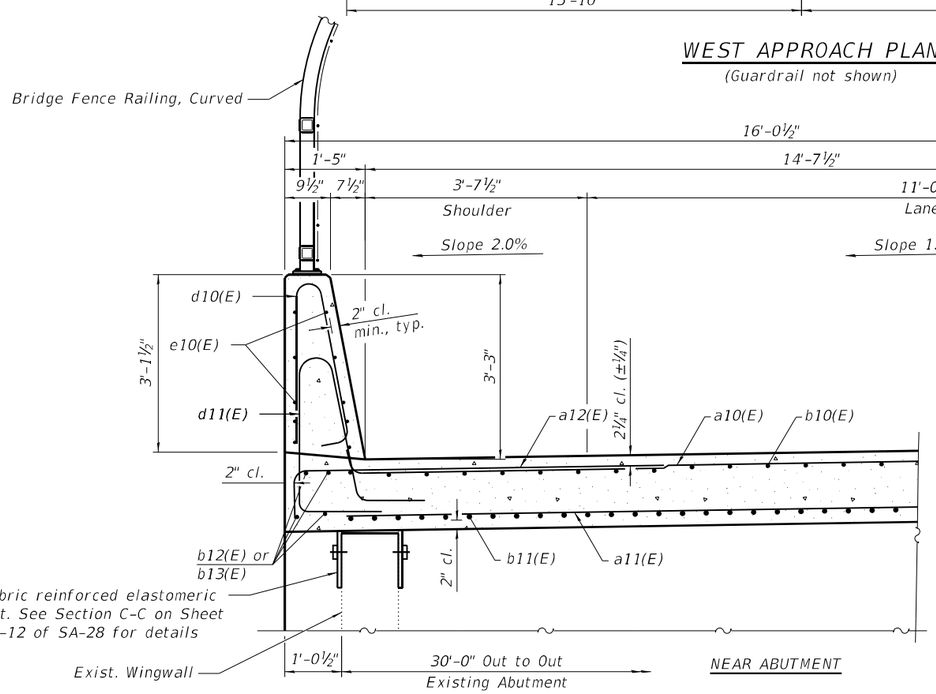

NEAR ABUTMENT

CROSS SECTION

(Looking West)

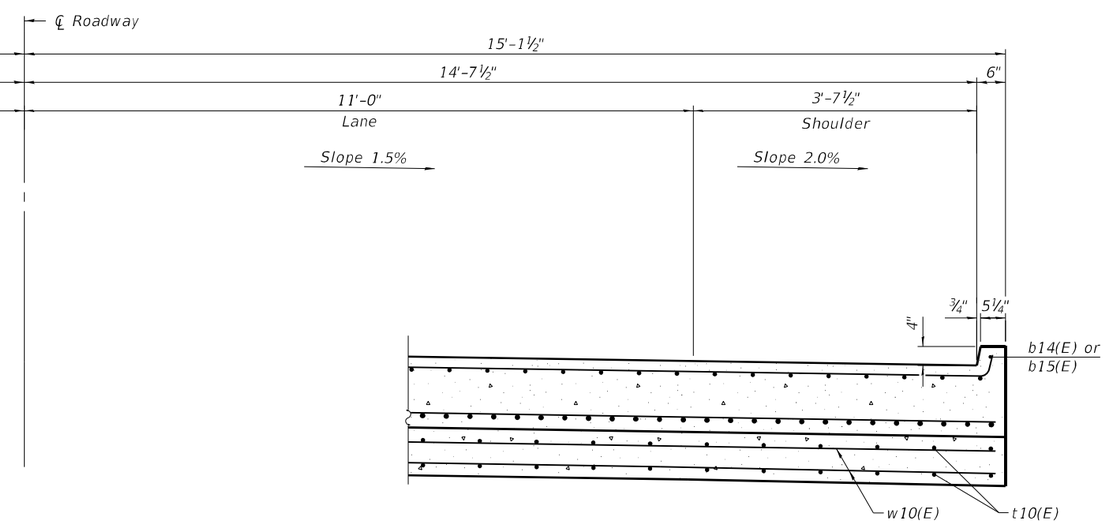

AT APPROACH FOOTING

AEG ATLAS ENGINEERING GROUP, LTD.	USER NAME =	DESIGNED - JJI	REVISED -
		CHECKED - JKL	REVISED -
	PLOT SCALE =	DRAWN - JJI	REVISED -
	PLOT DATE =	CHECKED - 6/21/2024	REVISED -

STATE OF ILLINOIS
DEPARTMENT OF TRANSPORTATION

BRIDGE APPROACH SLAB DETAILS
STRUCTURE NO. 099-0204

SHEET SA-13 OF SA-28 SHEETS

F.A.I RTE.	SECTION	COUNTY	TOTAL SHEETS	SHEET NO.
57	99-1HB-2-BR	WILL	133	61
		CONTRACT NO. 60R76		
	ILLINOIS	FED. AID PROJECT		

MODEL: Default
FILE NAME: pw:\\atlas-pw.bentley.com:atlas-pw-01\Documents\Projects\100111001 CV 008\003\10 CAD\3_Sheets\12_Structural\D160R76-099024_013_ApprSlabDetWestPlan
3/7/2025 11:55:15 AM

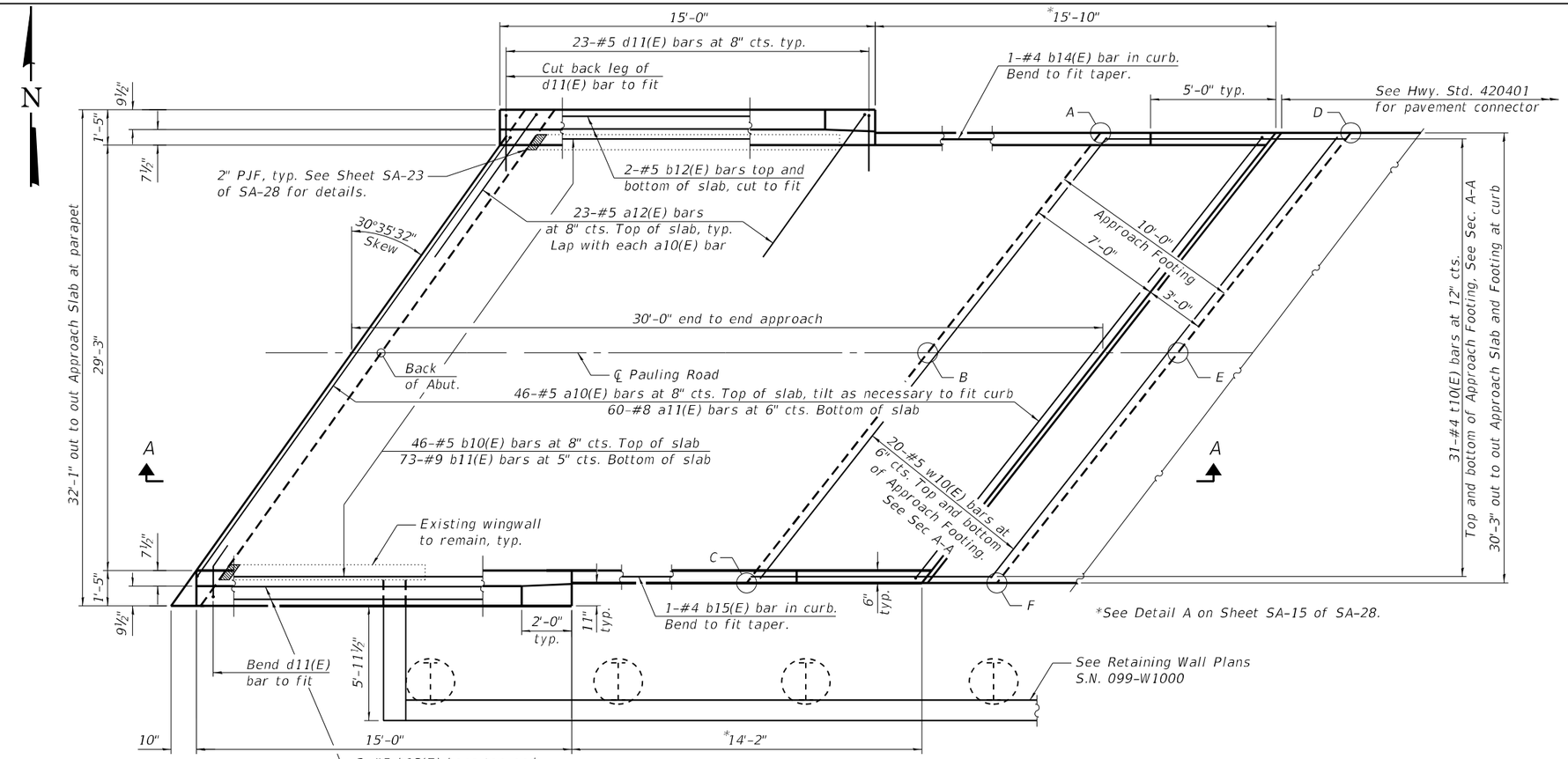

*See Detail A on Sheet SA-15 of SA-28.

EAST APPROACH PLAN

(Guardrail not shown)

TOP AND BOTTOM ELEVATIONS FOR EAST APPROACH FOOTING

East Approach		
Point/ Location	Top	Bottom
A-NW	777.04	776.20
B-CL	777.47	776.64
C-SW	777.39	776.56
D-NE	776.78	775.95
E-CL	777.23	776.39
F-SE	777.17	776.33

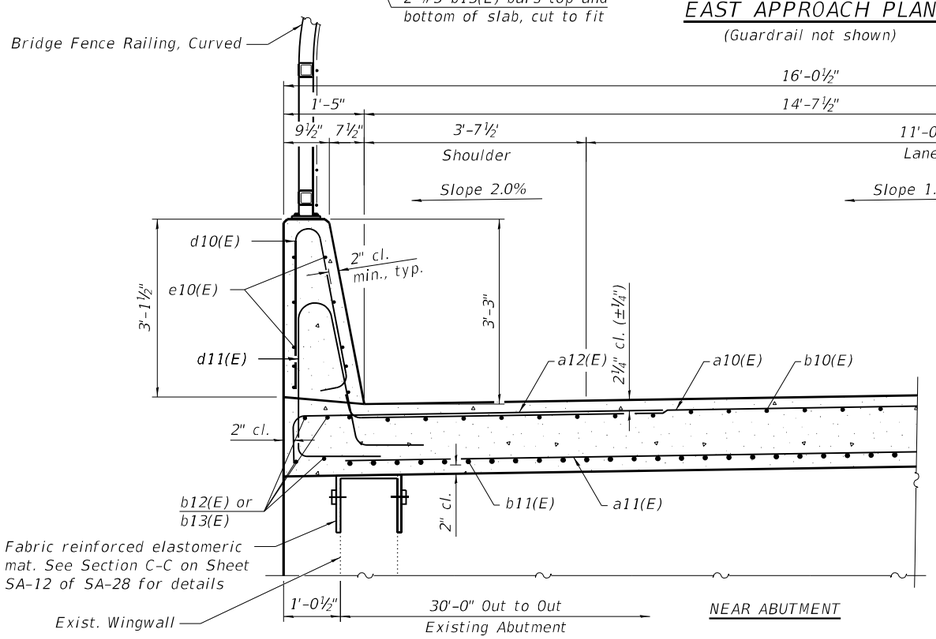

NEAR ABUTMENT

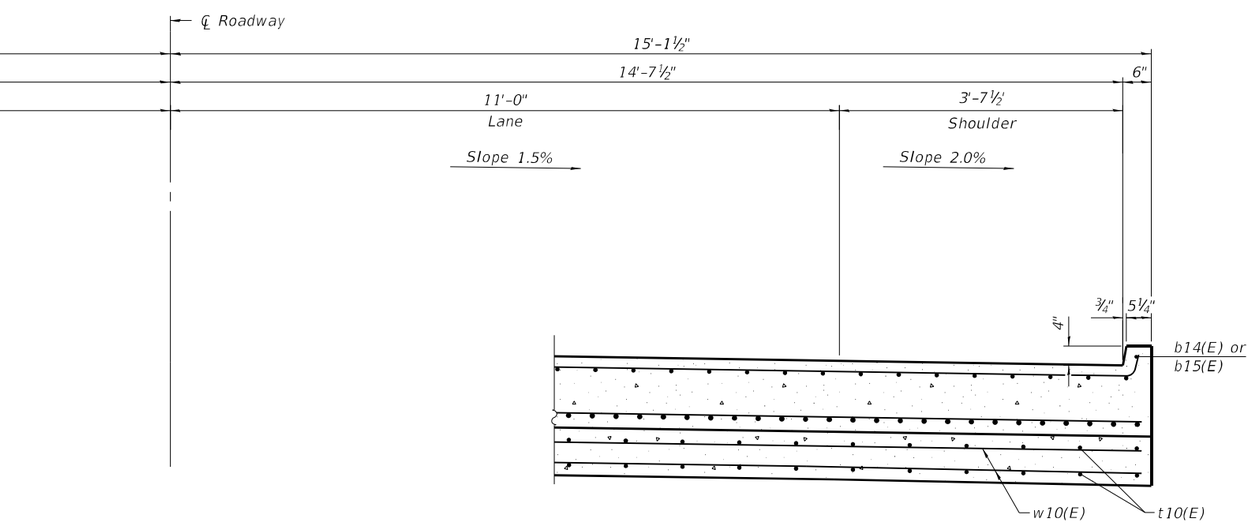

CROSS SECTION

(Looking East)

AT APPROACH FOOTING

MODEL: Default
FILE NAME: pw:\\atlas-pw.bentley.com:atlas-pw-01\Documents\Projects\10011\1001 CV 008\003\10 CAD\3_Sheets\12_Structural\D160R76-099024_014_ApprSlabDetEastPlan
3/7/2025 11:55:23 AM

AEG ATLAS ENGINEERING GROUP, LTD.	USER NAME =	DESIGNED - JJI	REVISED -
		CHECKED - JKL	REVISED -
	PLOT SCALE =	DRAWN - JJI	REVISED -
	PLOT DATE =	CHECKED - 6/21/2024	REVISED -

STATE OF ILLINOIS
DEPARTMENT OF TRANSPORTATION

BRIDGE APPROACH SLAB DETAILS
STRUCTURE NO. 099-0204

SHEET SA-14 OF SA-28 SHEETS

F.A.I RTE.	SECTION	COUNTY	TOTAL SHEETS	SHEET NO.
57	99-1HB-2-BR	WILL	133	62
		CONTRACT NO. 60R76		
	ILLINOIS	FED. AID PROJECT		

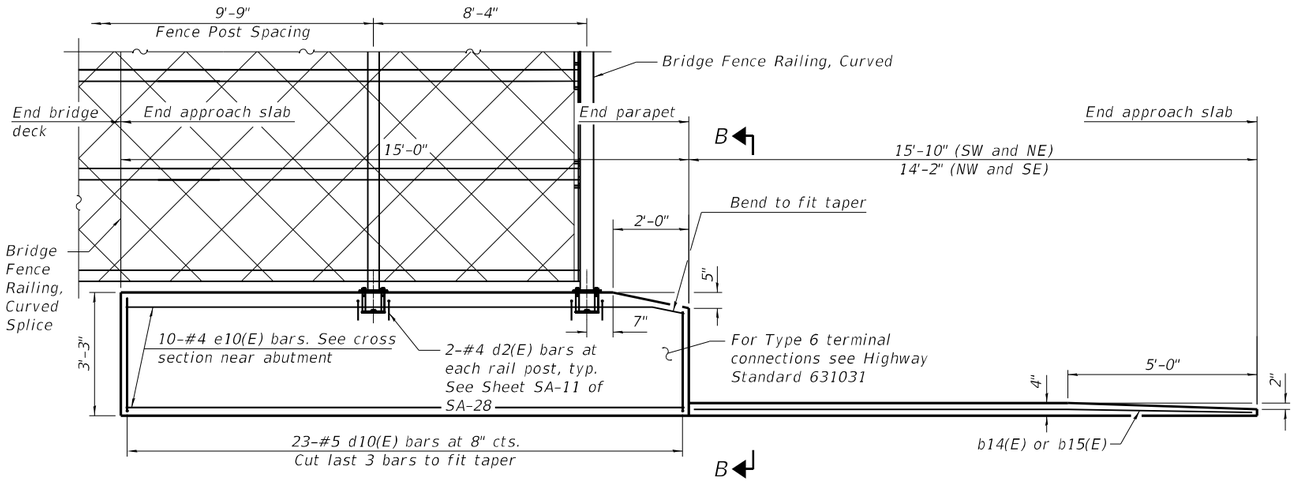

INSIDE ELEVATION OF PARAPET AND CURB

Notes:

The joint opening shall be adjusted for temperature per Article 520.04 of the Standard Specifications. However, since this detail is for jointless structures, the length of bridge used to calculate the adjustment shall be equal to half the total bridge length plus the length of the bridge approach slab.

Parapet concrete shall be paid for as Concrete Superstructure.

Approach slab shall be paid for as Concrete Superstructure (Approach Slab).

Approach footing concrete shall be paid for as Concrete Structures.

The approach footing maximum applied service bearing pressure (Qmax) = 2.0 ksf.

Cost of excavation for approach footing included with Concrete Structures.

For Granular Backfill for Structures and drainage treatment details, see sheet SA-3 of SA-28.

See special provisions for Preformed Pavement Joint Seal.

Splice Bridge Fence Railing, Curved at end of deck.

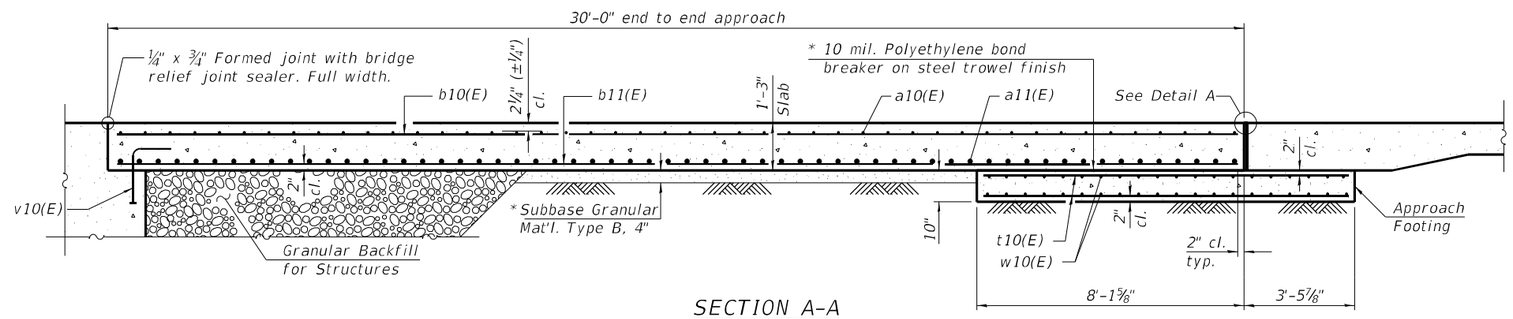

SECTION A-A

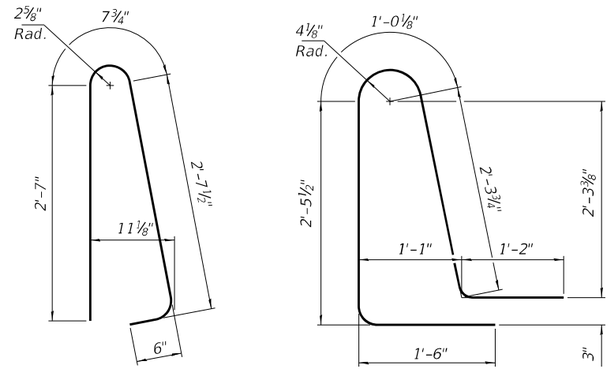

BAR d10(E)

BAR d11(E)

TWO APPROACHES
BILL OF MATERIAL

Bar	No.	Size	Length	Shape
a10(E)	92	#5	35'-3"	
a11(E)	120	#8	34'-9"	
a12(E)	46	#5	7'-4"	
b10(E)	92	#5	29'-8"	
b11(E)	146	#9	29'-8"	
b12(E)	8	#5	14-8"	
b13(E)	8	#5	15'-6"	
b14(E)	2	#4	15'-6"	
b15(E)	2	#4	14'-0"	
d10(E)	92	#5	6'-5"	
d11(E)	92	#5	8'-6"	
e10(E)	40	#4	14'-8"	
t10(E)	124	#4	11'-3"	
w10(E)	80	#5	34'-9"	
Concrete Superstructure			Cu. Yd.	7.8
Concrete Superstructure (Approach Slab)			Cu. Yd.	87.2
Concrete Structures			Cu. Yd.	21.7
Reinforcement Bars, Epoxy Coated			Pound	38,390
Bridge Deck Grooving			Sq. Yd.	182
Protective Coat			Sq. Yd.	228

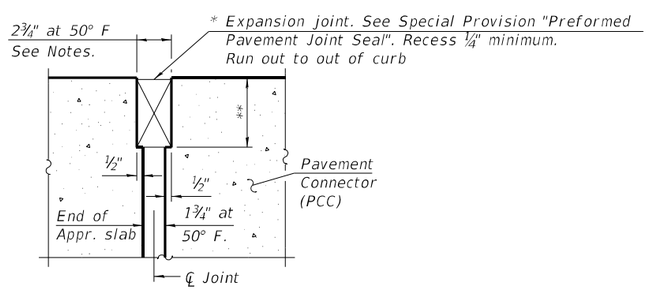

DETAIL A
(at Rt. L's)

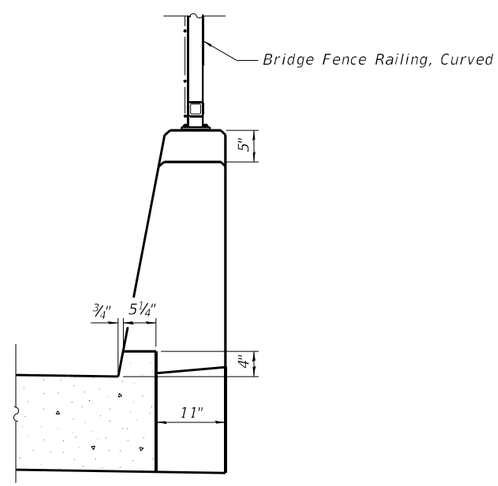

VIEW B-B

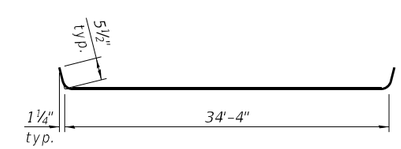

BAR a10(E)

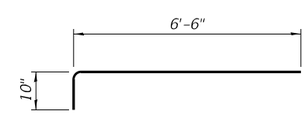

BAR a12(E)

* Cost included with Concrete Superstructure (Approach Slab).

** Per manufacturer recommendations

MODEL: Default
FILE NAME: pw:\\atlas-pw.bentley.com:atlas-pw-01\Documents\Projects\1001\1001 CV 008\003\10 CAD\3_Sheets\12_Structural\D160R76-099024_015_ApprSlabDetSections

AEG ATLAS ENGINEERING GROUP, LTD.	USER NAME =	DESIGNED - JJI	REVISED -
		CHECKED - JKL	REVISED -
	PLOT SCALE =	DRAWN - JJI	REVISED -
	PLOT DATE =	CHECKED - 6/21/2024	REVISED -

STATE OF ILLINOIS
DEPARTMENT OF TRANSPORTATION

BRIDGE APPROACH SLAB DETAILS
STRUCTURE NO. 099-0204

SHEET SA-15 OF SA-28 SHEETS

F.A.I RTE.	SECTION	COUNTY	TOTAL SHEETS	SHEET NO.
57	99-1HB-2-BR	WILL	133	63
		CONTRACT NO. 60R76		
		ILLINOIS FED. AID PROJECT		

3/7/2025 11:55:33 AM

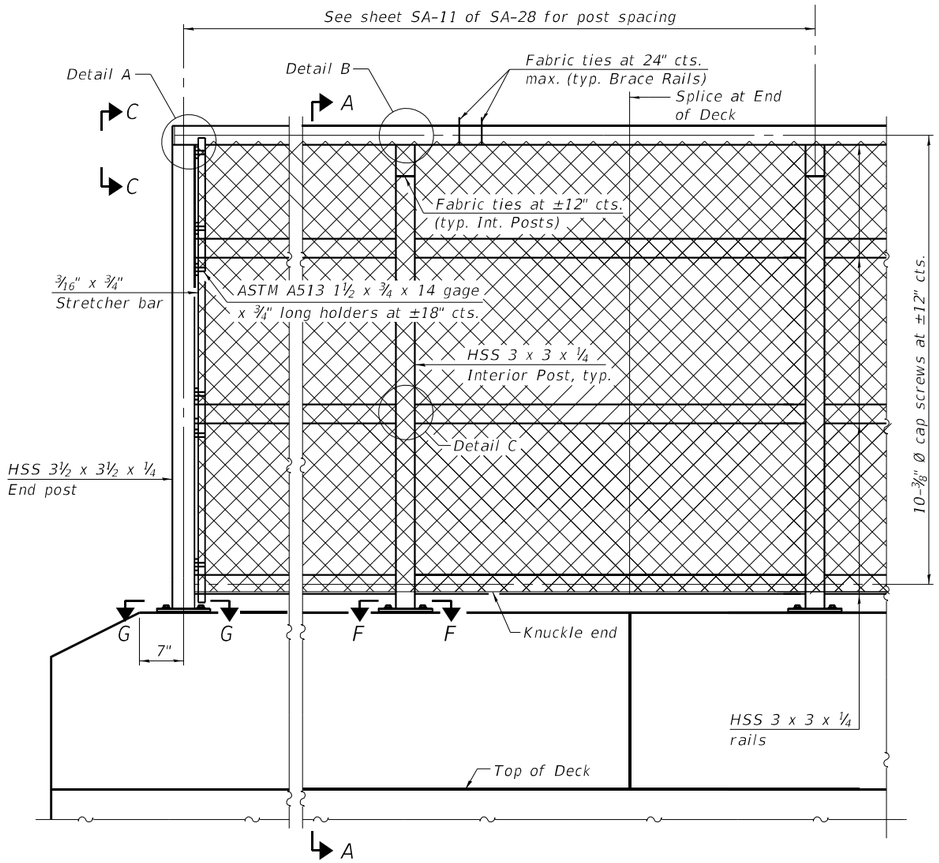

ELEVATION BRIDGE FENCE RAILING, CURVED

(Inside face)

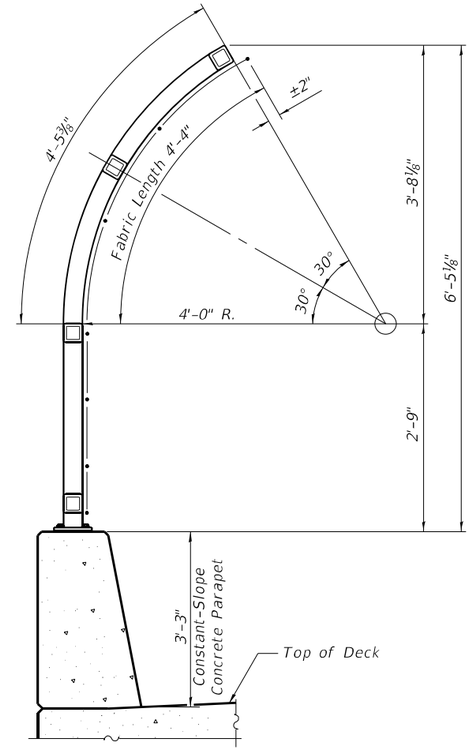

SECTION A-A

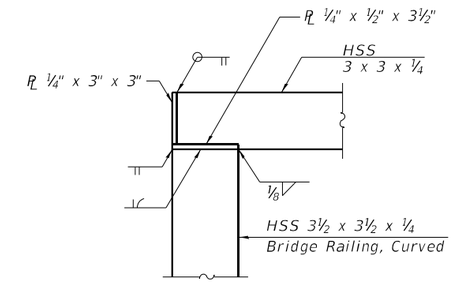

DETAIL A

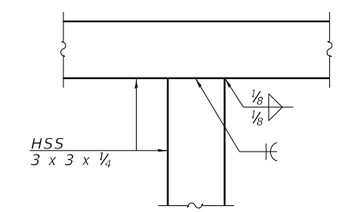

DETAIL B

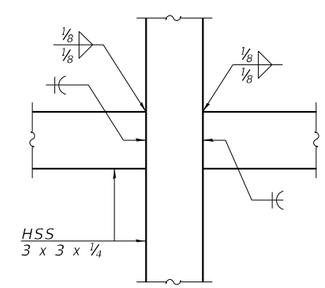

DETAIL C

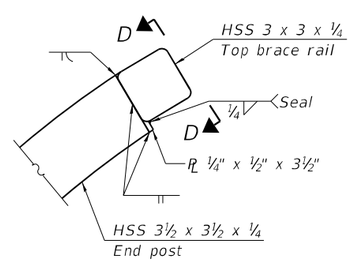

VIEW C-C

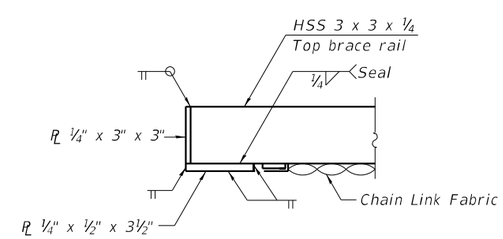

VIEW D-D

RAILING CRITERIA

NCHRP 350 Test Level	4
Railing Weight (plf)	70
Max Post Spacing	10'-0"

MODEL: Default
FILE NAME: pw:\\atlas-pw.bentley.com:atlas-pw-01\Documents\Projects\1001\1001 CV 008\003\10 CAD\3_Sheets\12_Structural\D160R76-099024_016_BridgeFenceRailCurved1
3/7/2025 11:55:41 AM

AEG ATLAS ENGINEERING GROUP, LTD.	USER NAME =	DESIGNED - JJI	REVISED -
		CHECKED - JKL	REVISED -
	PLOT SCALE =	DRAWN - JJI	REVISED -
	PLOT DATE =	CHECKED - 6/21/2024	REVISED -

STATE OF ILLINOIS
DEPARTMENT OF TRANSPORTATION

BRIDGE FENCE RAILING, CURVED
STRUCTURE NO. 099-0204

SHEET SA-16 OF SA-28 SHEETS

F.A.I RTE.	SECTION	COUNTY	TOTAL SHEETS	SHEET NO.
57	99-1HB-2-BR	WILL	133	64
		CONTRACT NO. 60R76		
		ILLINOIS FED. AID PROJECT		

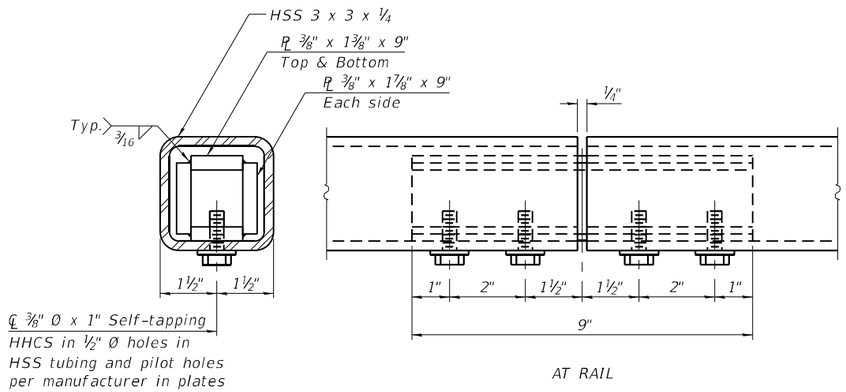

MATERIAL SPLICE

Notes:

Place reinforcement bars to miss anchor rod locations.

CVN testing is not required for the HSS tubing used in the Bridge Fence Railing, Curved.

All heavy hex nuts shall be according to ASTM A 563 grade DH.

All fully threaded anchor rods shall be ASTM F1554 grade 105.

The post base plate shall be fastened to the curb snug tight and given an additional ⅛" turn.

Rail splice inserts may be built out of bent plates of the same thicknesses and outside geometry limits as the 4 plate rail splice inserts shown.

Splice Bridge Fence Railing, Curved, at End of Deck.

Bridge Fence Railing, Curved, shall be galvanized.

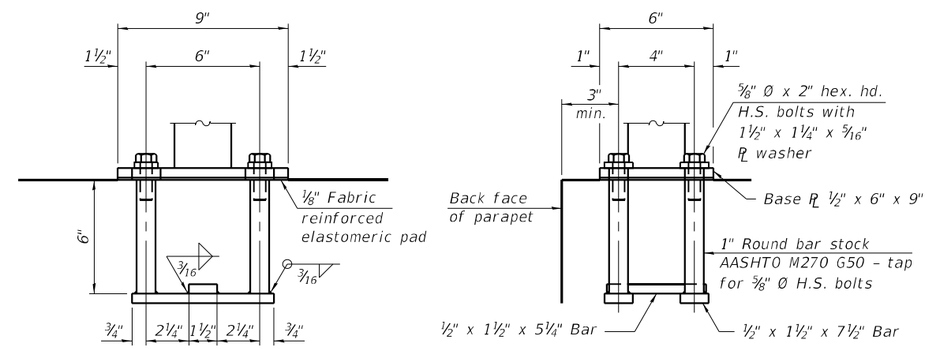

ANCHORAGE ASSEMBLY

In lieu of the cast-in-place anchor device shown, the Contractor has the option of drilling and setting ⅝" Ø fully threaded anchor rods with the same plate washers as specified above and heavy hex lock nuts according to Article 509.06 of the Standard Specifications. Embedment shall be according to the manufacturer's specifications.

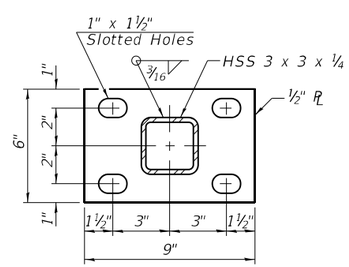

SECTION F-F

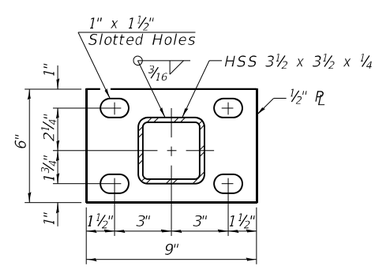

SECTION G-G

Item	Unit	Quantity
Bridge Fence Railing, Curved	Foot	561

AEG ATLAS ENGINEERING GROUP, LTD.	USER NAME =	DESIGNED - JJI	REVISED -
		CHECKED - JKL	REVISED -
	PLOT SCALE =	DRAWN - JJI	REVISED -
	PLOT DATE =	CHECKED - 6/21/2024	REVISED -

STATE OF ILLINOIS
DEPARTMENT OF TRANSPORTATION

BRIDGE FENCE RAILING, CURVED
STRUCTURE NO. 099-0204

SHEET SA-17 OF SA-28 SHEETS

F.A.I RTE.	SECTION	COUNTY	TOTAL SHEETS	SHEET NO.
57	99-1HB-2-BR	WILL	133	65
		CONTRACT NO. 60R76		
		ILLINOIS FED. AID PROJECT		

MODEL: Default
FILE NAME: pw:\\atlas-pw.bentley.com:atlas-pw-01\Documents\Projects\100111001 CV 008\003\10 CAD\3_Sheets\12_Structural\D160R76-099024_017_BridgeFenceRailCurved.dgn

3/7/2025 11:55:49 AM

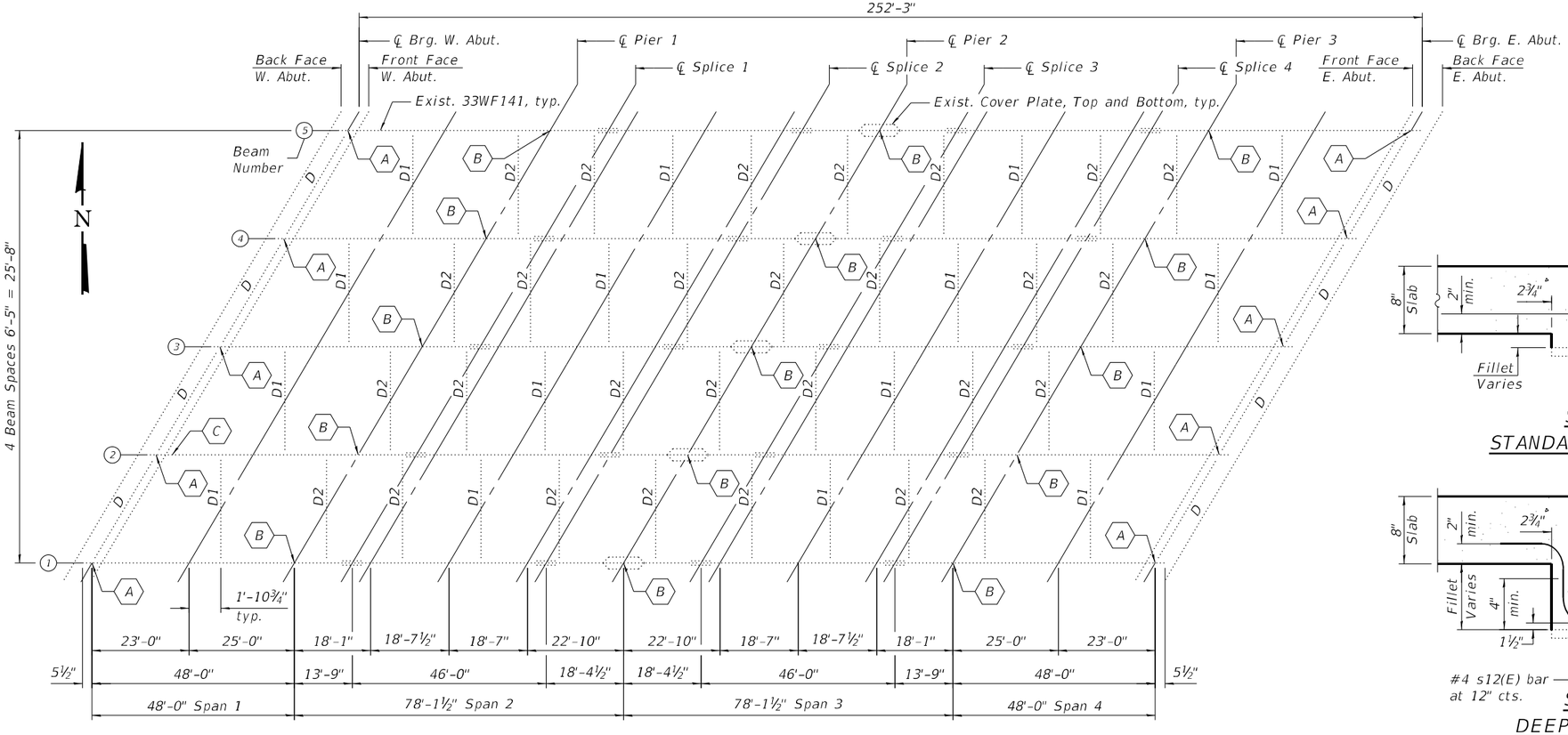

FRAMING PLAN

LEGEND

Location (A) Jack and Remove Existing Bearing

Location (B) Existing Bearing to be cleaned and painted. Cost included in Cleaning and Painting Steel Bridge No. 1

Location (C) Beam Repair, See Sheet SA-19 of SA-28

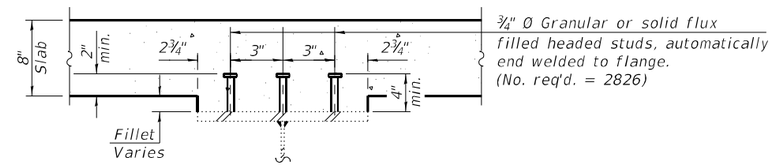

SECTION A-A
STANDARD FILLET SECTION

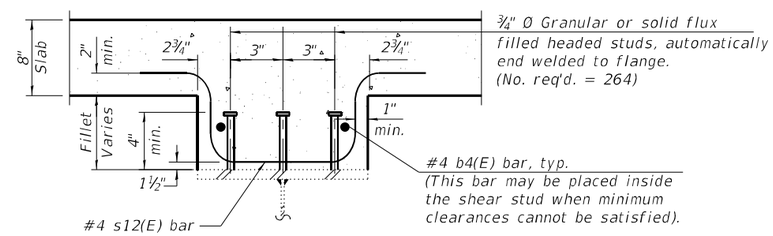

SECTION B-B
DEEP FILLET SECTION

(Reinforced fillets are required when the fillet exceeds 6 inches)

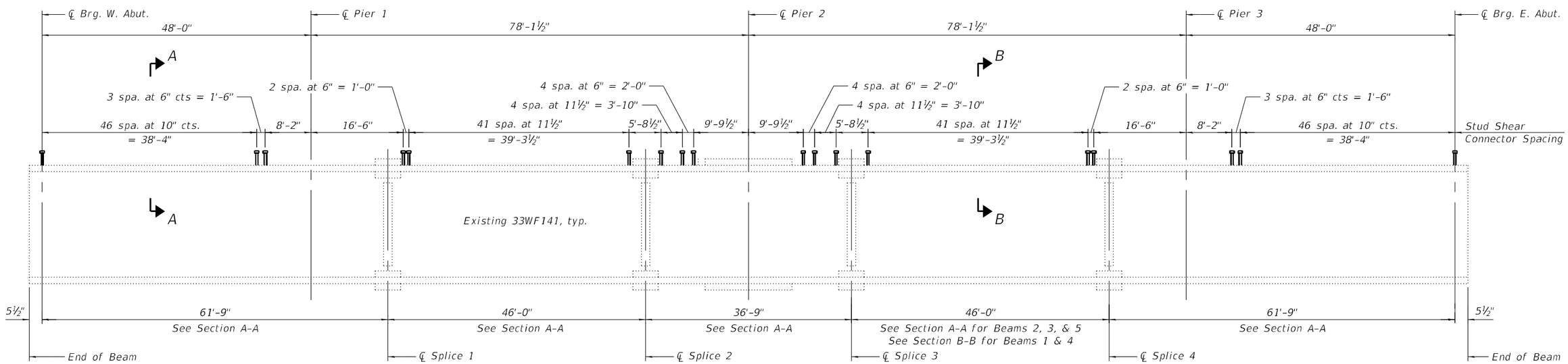

BEAM ELEVATION

Note:
See Sheet SA-19 of SA-28 for Exist. Diaphragm details.

ATLAS ENGINEERING GROUP, LTD.	USER NAME =	DESIGNED - JJI	REVISED -	STATE OF ILLINOIS DEPARTMENT OF TRANSPORTATION	STRUCTURAL STEEL STRUCTURE NO. 099-0204	F.A.I RTE.	SECTION	COUNTY	TOTAL SHEETS	SHEET NO.
		CHECKED - JKL	REVISED -			57	99-1HB-2-BR	WILL	133	66
	PLOT SCALE =	DRAWN - JJI	REVISED -					CONTRACT NO. 60R76		
	PLOT DATE =	CHECKED - 6/21/2024	REVISED -		SHEET SA-18 OF SA-28 SHEETS		ILLINOIS	FED. AID PROJECT		

MODEL: Default
FILE NAME: pw:\\atlas-pw.bentley.com:atlas-pw-01\Documents\Projects\100111001 CV 008\003\10 CAD\3_Sheets\12_Structural\D160R76-099024_018_Structural Steel
3/7/2025 11:55:57 AM

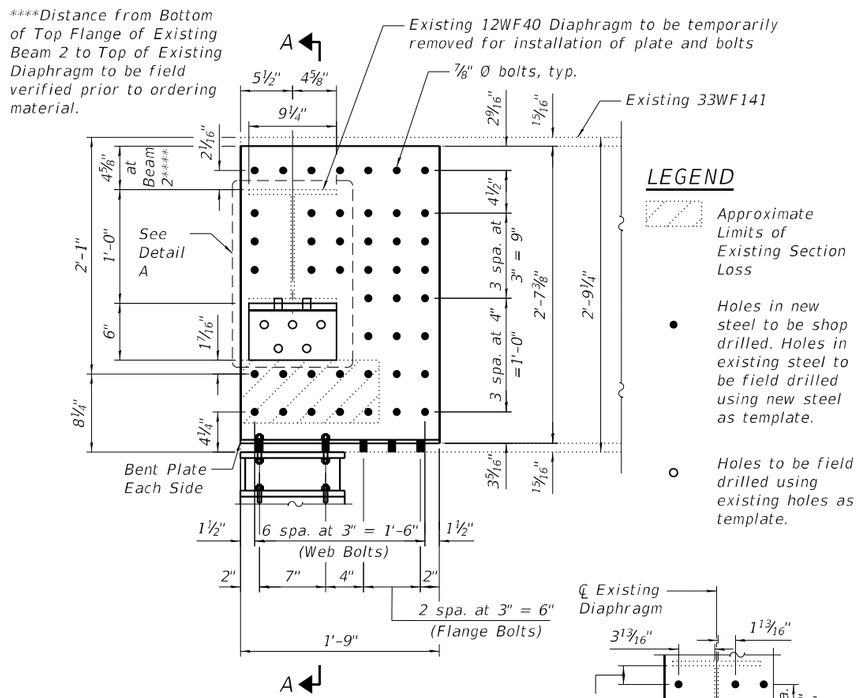

BEAM REPAIR DETAIL

(Horizontal dim. along ℄ Beam)

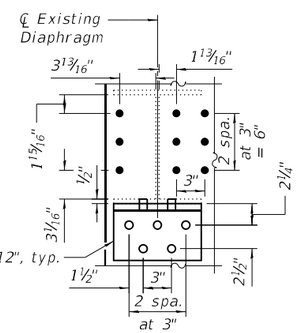

DETAIL A

(Contractor to field verify diaphragm location, bolt hole locations, and bolt diameters prior to ordering material.)

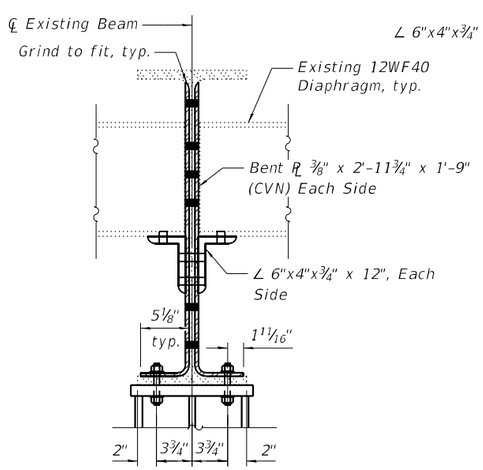

SECTION A-A

INTERIOR BEAM MOMENT TABLE					
		0.4 Sp. 1 or 0.6 Sp. 4	Pier 1 & 3	0.5 Sp. 2 or 0.5 Sp. 3	Pier 2
Is	(in^4)	7,450	7,450	7,450	10,306
Ic(n)	(in^4)	19,378	–	19,378	–
Ic(3n)	(in^4)	14,356	–	14,356	–
Ss	(in^3)	448	448	448	601
Sc(n)	(in^3)	645	–	645	–
Sc(3n)	(in^3)	585	–	585	–
Z	(in^3)	–	506	–	668
wD	(k/')	0.85	1.09	0.85	1.12
MD	('k)	97.4	426.3	236.6	606.9
sD	(k/')	0.24	–	0.24	–
MsD	('k)	32.4	–	80.0	–
ML	('k)	302.4	238.4	461.2	295.9
MI	('k)	87.4	63.4	113.5	72.9
5/3 [ML + I]	('k)	649.7	503.0	957.8	614.7
Ma	('k)	1,013.3	1,208.2	1,656.8	1,588.0
Mu	('k)	2,688.9	1,517.9	2,688.9	2,003.0
fs D non-comp	(ksi)	2.6	11.4	6.3	12.1
fs D (comp)	(ksi)	0.7	–	1.6	–
fs 5/3 [ML + MI]	(ksi)	12.1	13.5	17.8	12.3
fs (Overload)	(ksi)	15.4	24.9	25.8	24.4
fs (Total)	(ksi)	–	–	–	–
VR	(k)	55	–	45	–

INTERIOR BEAM REACTION TABLE				
		Abut.	Pier 1 & 3	Pier 2
RD	(k)	***52.6	75.3	89.7
RL	(k)	37.3	45.0	46.8
RI	(k)	10.8	12.0	11.5
RTotal	(k)	100.7	132.3	148.1

* Compact section
** Braced non-compact and partially braced section
*** Dead load reaction at the abutments includes loads from concrete diaphragm and approach slab

Is, Ss: Non-composite moment of inertia and section modulus of the steel section used for computing fs(Total and Overload) due to non-composite dead loads (in.4 and in.?).
Ic(n), Sc(n): Composite moment of inertia and section modulus of the steel and deck based upon the modular ratio, "n", used for computing fs(Total and Overload) due to short-term composite live loads (in.4 and in.?).
Ic(3n), Sc(3n): Composite moment of inertia and section modulus of the steel and deck based upon 3 times the modular ratio, "3n", used for computing fs(Total and Overload) due to long-term composite (superimposed) dead loads (in.4 and in.?).
Z: Plastic Section Modulus of the steel section in non-composite areas ($in.^3$).
wD: Un-factored non-composite dead load (kips/ft.).
MD: Un-factored moment due to non-composite dead load (kip-ft.).
sD: Un-factored long-term composite (superimposed) dead load (kips/ft.)
MsD: Un-factored moment due to long-term composite (superimposed) dead load (kip-ft.).
ML: Un-factored live load moment (kip-ft.).
MI: Un-factored moment due to impact (kip-ft.).
Ma: Factored design moment (kip-ft.).
1.3 [MD + MsD + 5/3 (ML + MI)]
Mu: Compact composite moment capacity according to AASHTO LFD 10.50.1.1 or compact non-composite moment capacity according to AASHTO LFD 10.48.1 (kip-ft.).
fs (Overload): Sum of stresses as computed from the moments below (ksi).
MD + MsD + 5/3 (ML + MI)
fs (Total): Sum of stresses as computed from the moments below on non-compact section (ksi).
1.3 [MD + MsD + 5/3 (ML + MI)]
VR: Maximum L + impact shear range within the composite portion of the span for stud shear connector design (kips).

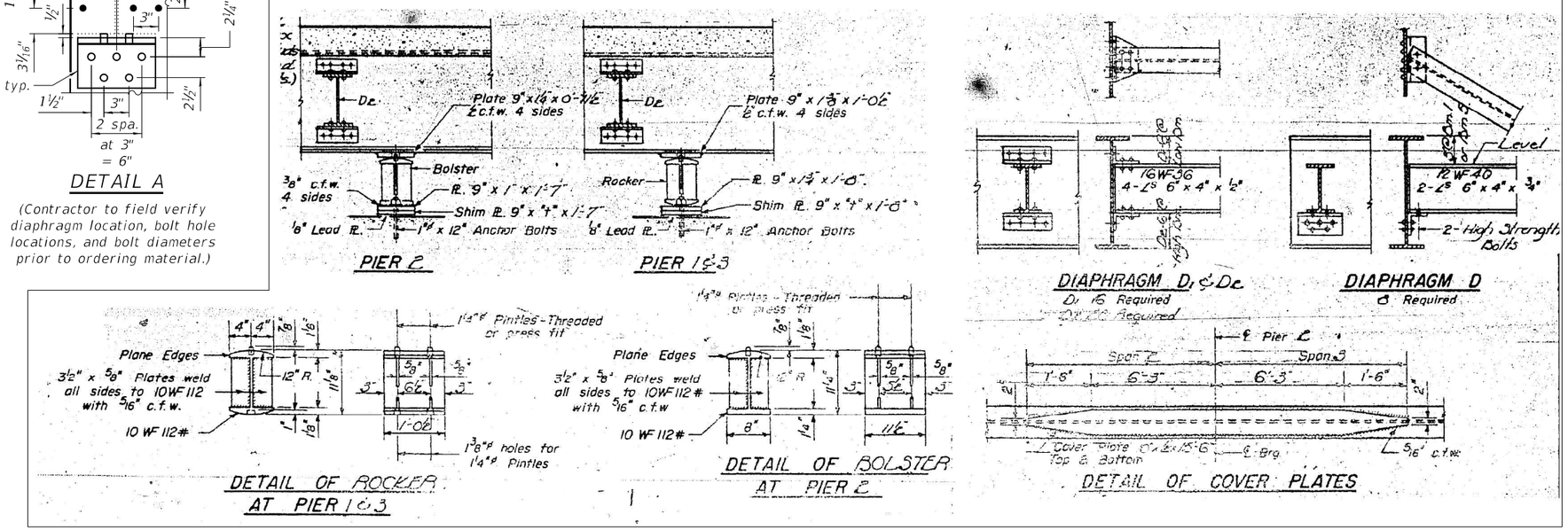

Notes:
Load carrying components designated "CVN" shall conform to the Charpy-V-Notch Impact Requirement, Zone 2.
Ream existing bolt holes in web or diaphragm if necessary.
Cost of new structural steel is included in Furnishing and Erecting Structural Steel.
Cost of field drilling or reaming, removal of existing clip angles, and temporary removal of diaphragm is included in Furnishing and Erecting Structural Steel.
The existing diaphragms should be trimmed as necessary to fit. The bolt holes in the bottom flange of the existing diaphragm should be elongated as necessary if the bolts are too close to the curved inside face of the new clip angle. Oversized washers shall be provided for the elongated holes. Cost included in Furnishing and Erecting Structural Steel.
Repair Detail is a primary connection.

EXISTING STRUCTURAL STEEL DETAILS
FOR INFORMATION ONLY

BILL OF MATERIAL

Item	Unit	Total
Furnishing and Erecting Structural Steel	Pound	270

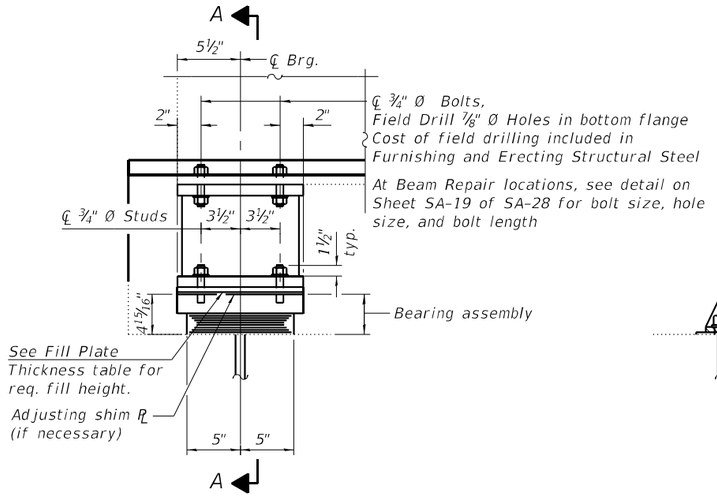

ELEVATION AT ABUT.

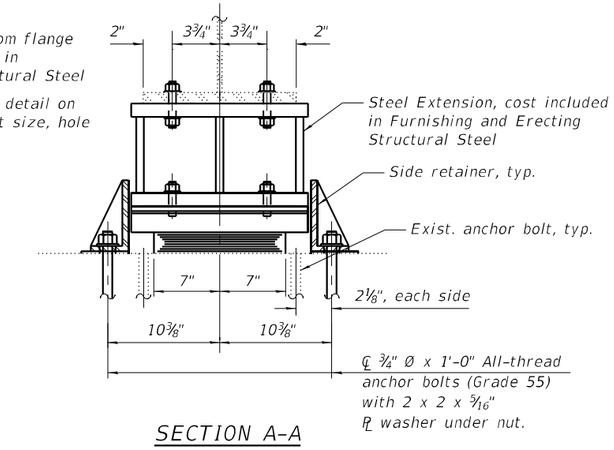

SECTION A-A

TYPE I ELASTOMERIC EXP. BRG.

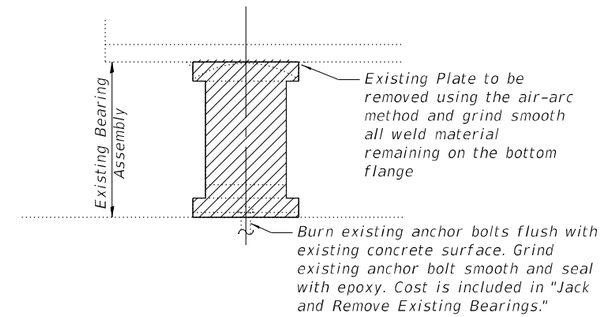

EXISTING BEARING REMOVAL DETAIL

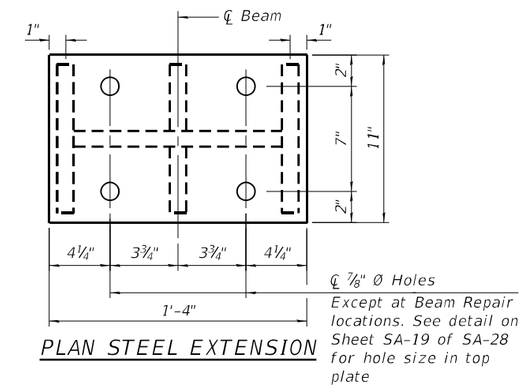

PLAN STEEL EXTENSION

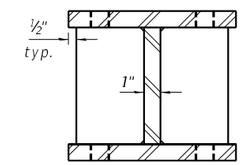

SECTION B-B

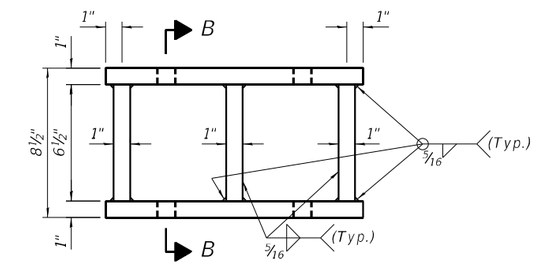

ELEVATION STEEL EXTENSION

Steel Extension cost included in Furnishing and Erecting Structural Steel.

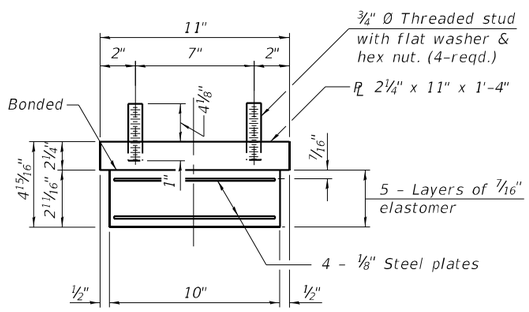

BEARING ASSEMBLY

Note:
Shim plates shall not be placed under bearing assembly.

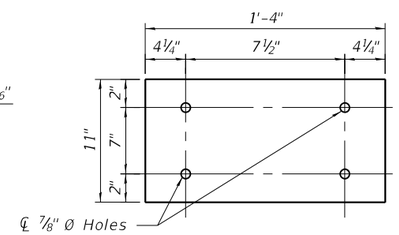

PLAN- FILL PLATE

Plate thickness varies per location, see Fill Plate Thickness table. Fill Plate cost included in Furnishing and Erecting Structural Steel.

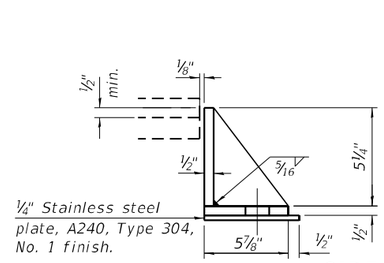

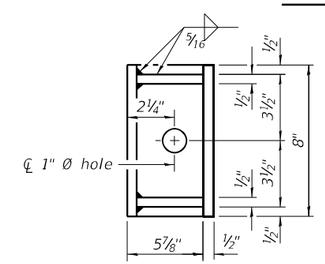

SIDE RETAINER

Equivalent rolled angle with stiffeners will be allowed in lieu of welded plates.

FILL PLATE THICKNESS

Abutment Location	Beam No.	Required Thickness
West Abutment	1	7/16"
West Abutment	2	⅜"
West Abutment	3	⅝"
West Abutment	4	1¼"
West Abutment	5	½"
East Abutment	1	⅛"
East Abutment	2	1⅛"
East Abutment	3	1"
East Abutment	4	7/16"
East Abutment	5	⅜"

Notes:
Side retainers and stainless steel plates shall be included in the cost of Elastomeric Bearing Assembly, Type I.
Anchor bolts and side retainers at all supports shall be installed as each member is erected unless an equivalent temporary means of lateral restraint is used.
Drill and grout anchor bolts in accordance with Section 548 of the Standard Specifications. Cost included with Anchor Bolts, ¾".
Two ⅛ in. adjusting shims shall be provided for each bearing in addition to all other plates or shims and placed as shown on bearing details.
Prior to ordering any material, the Contractor shall verify in the field all bearing height and shim plate thickness dimensions.

Notes for Jack and Remove Existing Bearings:
The Contractor shall submit, for approval by the Engineer, plans for jacking and removing the existing bearings at the abutments prior to commencing any related work.
Jacking and removal of existing bearings shall be done after the existing concrete deck is removed.
The new bearings shall be in place and the jacks lowered prior to pouring the new deck.
The dead load reaction per beam (weight of steel only) at each abutment is 3k.
The minimum jack capacity is 6k per beam.
See Special Provisions for Jack and Remove Existing Bearings.

BILL OF MATERIAL

Item	Unit	Total
Furnishing and Erecting Structural Steel	Pound	2,130
Elastomeric Bearing Assembly, Type I	Each	10
Anchor Bolts, ¾"	Each	20
Jack and Remove Existing Bearings	Each	10

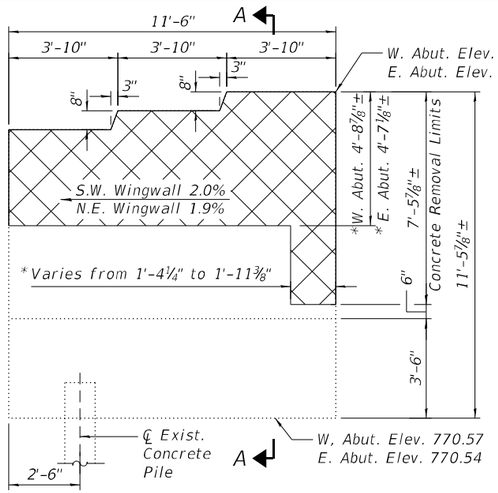

SOUTHWEST WINGWALL ELEVATION

(Northeast Wingwall similar)

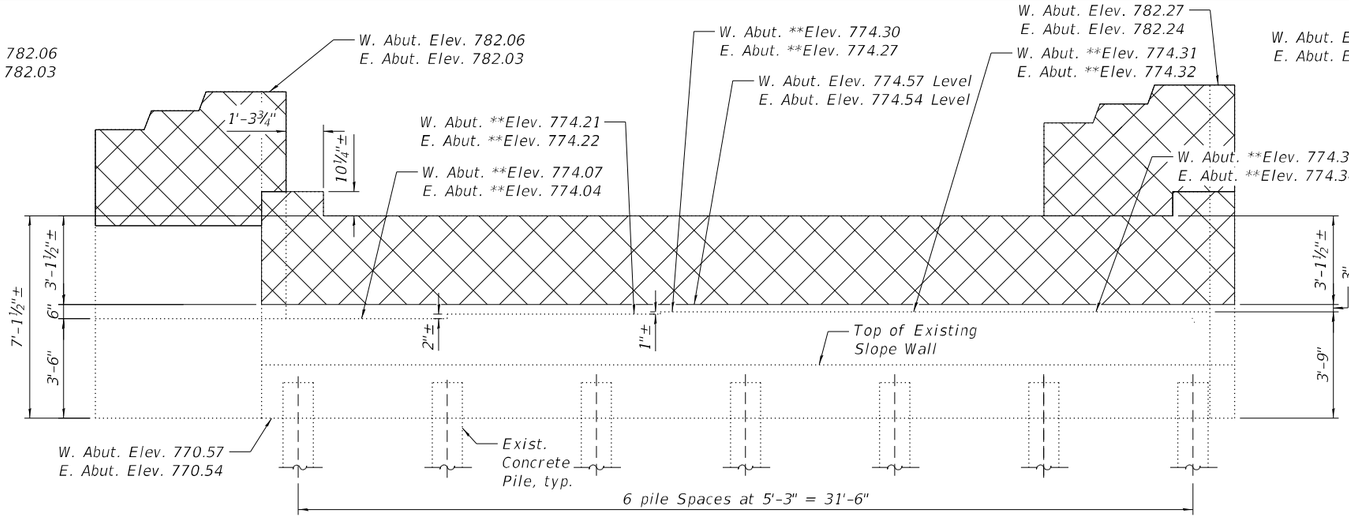

ELEVATION

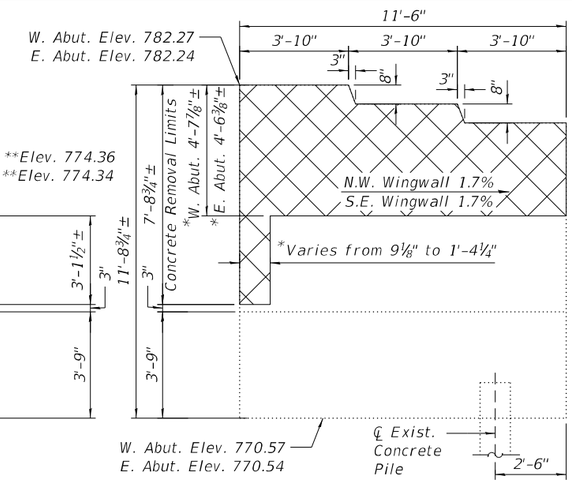

NORTHWEST WINGWALL ELEVATION

(Southeast Wingwall similar)

* Contractor shall field verify removal limits.
** Elevations from survey of existing beam seats.

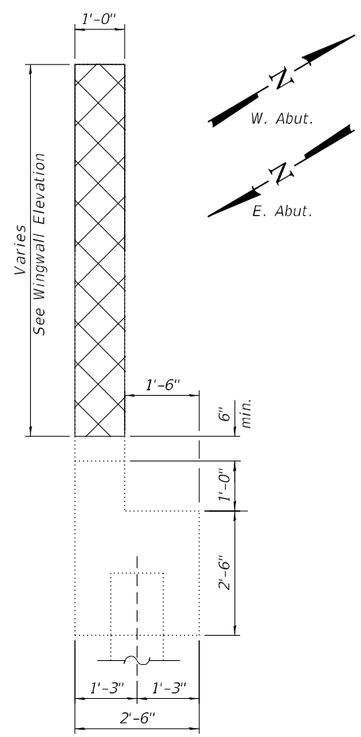

SECTION A-A

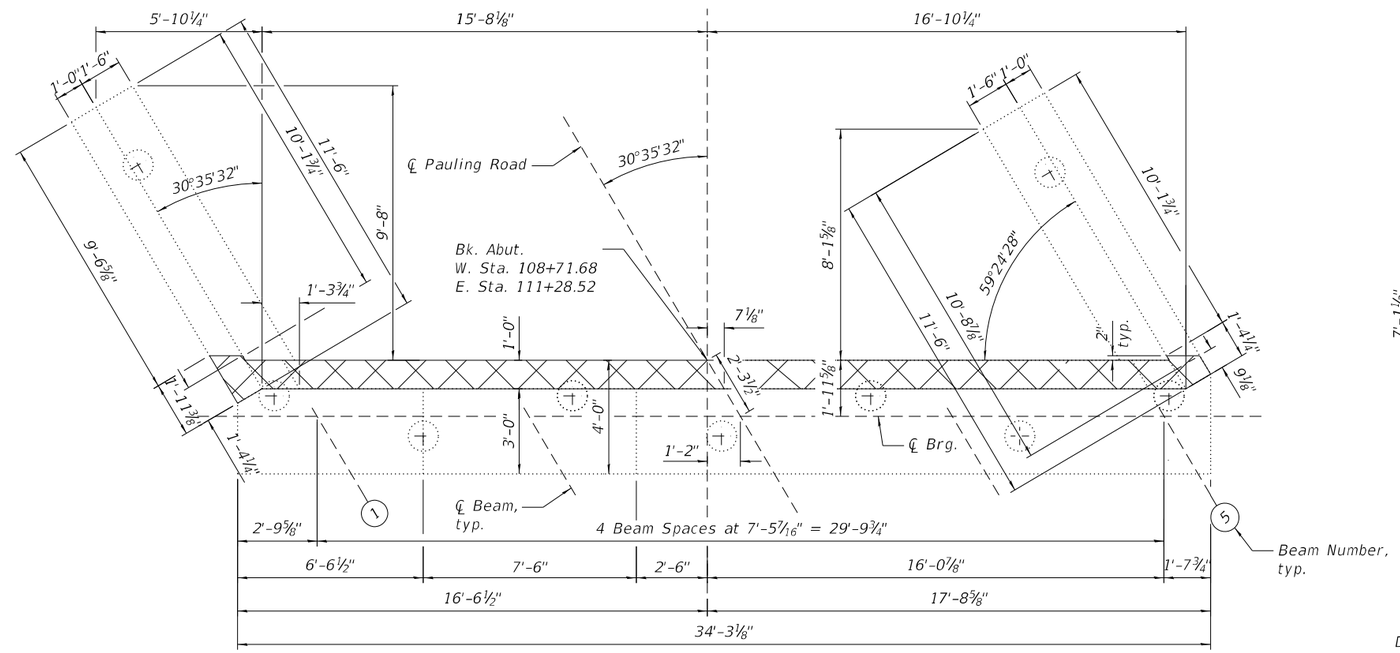

PLAN

(West Abutment Shown, East Abutment Similar)

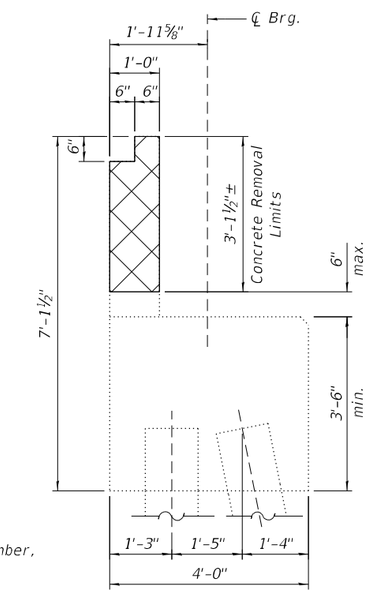

SECTION THRU ABUT.

Dimensions at right angles to abutment.

LEGEND

Concrete Removal

BILL OF MATERIAL

Item	Unit	Total
Concrete Removal	Cu. Yd.	15.2

MODEL: Default
FILE NAME: pw:\\atlas-pw.bentley.com:atlas-cw-01\Documents\Projects\10011001 CV 008003\10 CAD\2_Sheets\12_Structural\D160R76-099024_021_AbutmentRemovalDetails

3/7/2025 11:56:47 AM

AEG ATLAS ENGINEERING GROUP, LTD.	USER NAME =	DESIGNED - JJI	REVISED -
		CHECKED - JKL	REVISED -
	PLOT SCALE =	DRAWN - JJI	REVISED -
	PLOT DATE =	CHECKED - 6/21/2024	REVISED -

STATE OF ILLINOIS
DEPARTMENT OF TRANSPORTATION

ABUTMENT REMOVAL DETAILS
STRUCTURE NO. 099-0204

SHEET SA-21 OF SA-28 SHEETS

F.A.I RTE.	SECTION	COUNTY	TOTAL SHEETS	SHEET NO.
57	99-1HB-2-BR	WILL	133	69
		CONTRACT NO. 60R76		
	ILLINOIS	FED. AID PROJECT		

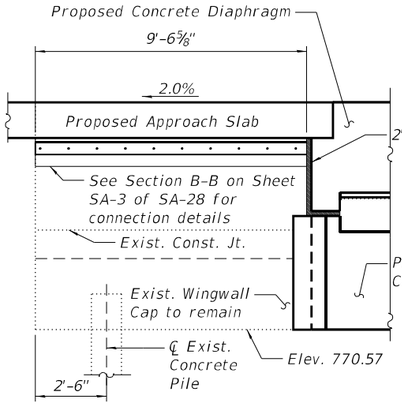

SOUTHWEST WINGWALL ELEVATION

(Bearing not shown for clarity)

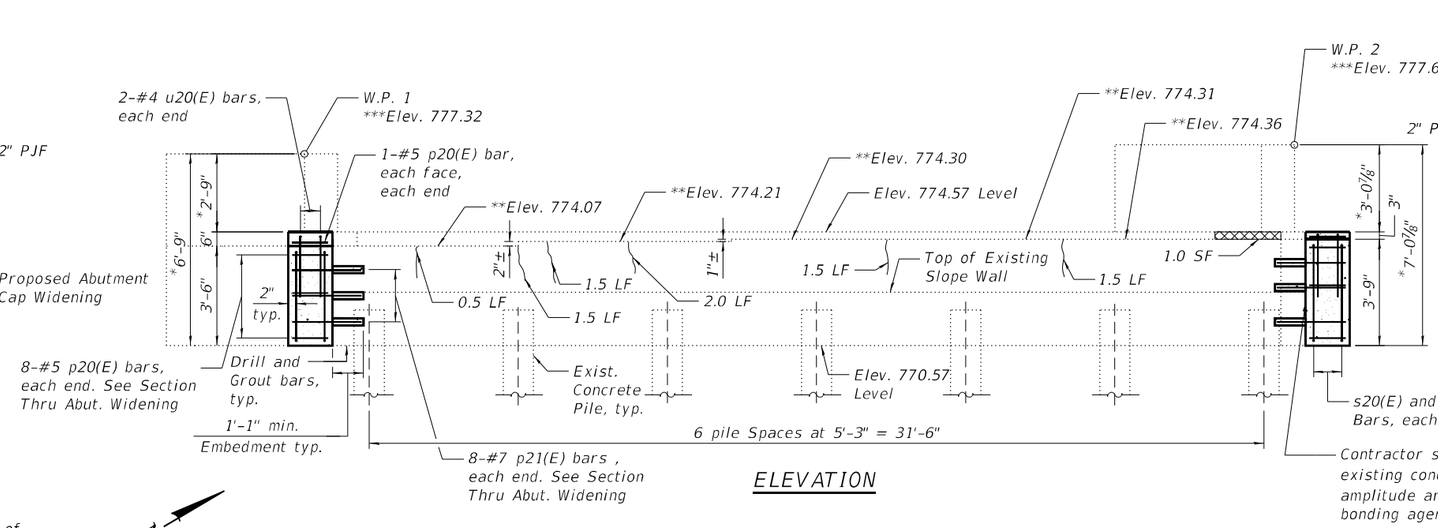

ELEVATION

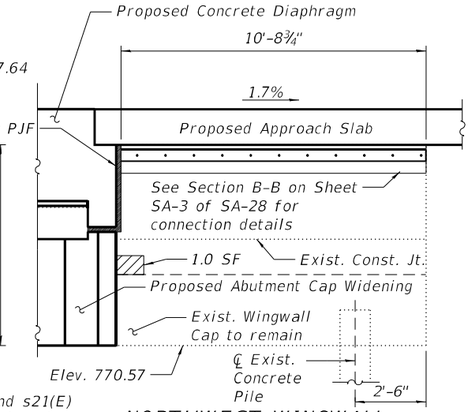

NORTHWEST WINGWALL ELEVATION

(Bearing not shown for clarity)

* Dimensions based on removal limits on Sheet SA-21 of SA-28. Contractor shall field verify removal limits.
** Elevations from survey of existing beam seats.
*** Elevations are based on a minimum fabric reinforced elastomeric mat thickness of ⅛" and can be adjusted to accommodate thickness selected by the Contractor.

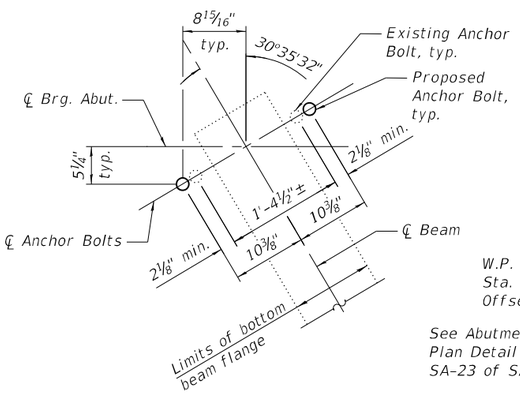

ANCHOR BOLT LAYOUT DETAIL

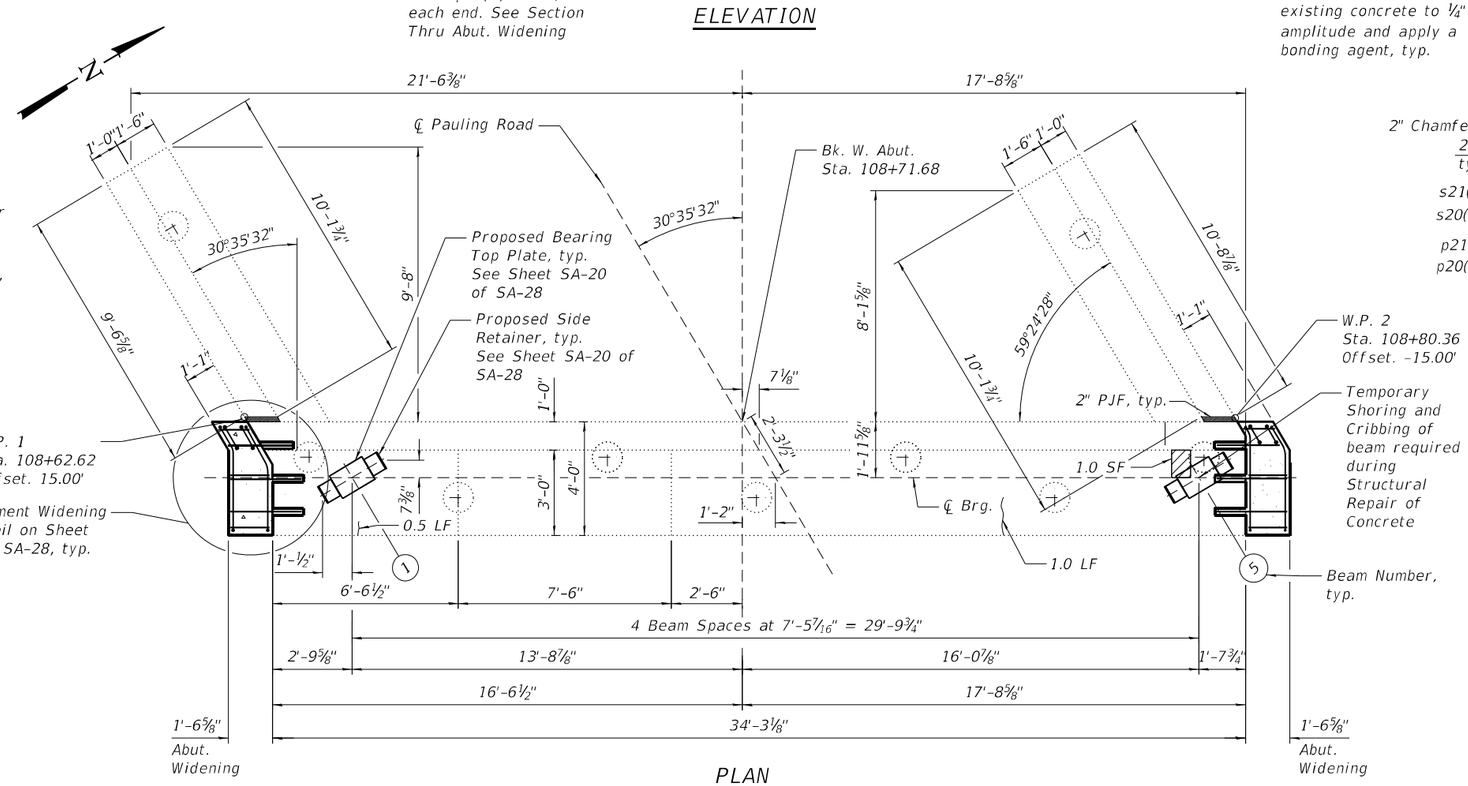

PLAN

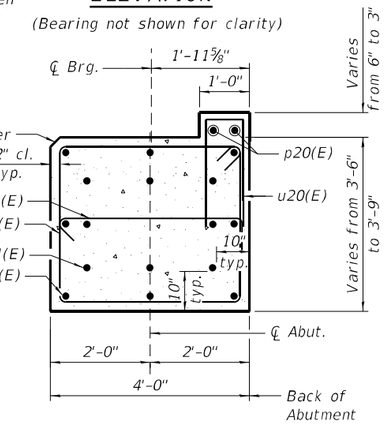

SECTION THRU ABUT. WIDENING

Dimensions at right angles to abutment.

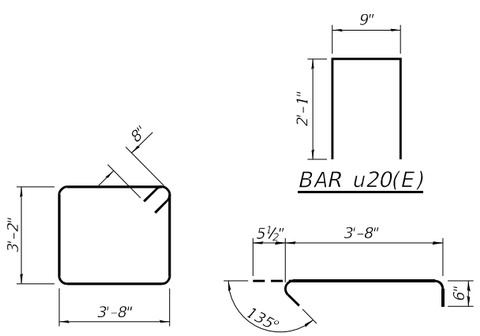

BAR u20(E)

BAR s20(E)

BAR s21(E)

BILL OF MATERIAL

Bar	No.	Size	Length	Shape
p20(E)	20	#5	1'-2"	
p21(E)	16	#5	2'-6"	
s20(E)	4	#6	15'-0"	
s21(E)	4	#5	4'-8"	
u20(E)	4	#4	4'-11"	
Concrete Structures			Cu. Yd.	1.6
Structural Repair of Concrete Depth Equal To or Less Than 5 Inches			Sq. Ft.	2
Structural Repair of Concrete Depth Greater Than 5 Inches			Sq. Ft.	1
Reinforcement Bars, Epoxy Coated			Pound	190
Epoxy Crack Injection			Foot	10
Temporary Shoring and Cribbing			Each	1

Notes:

Repair areas and crack length shown are intended as a guide for bidding purposes. Actual repair areas shall be determined in the field by the Engineer. A nominal amount of additional repair quantities have been provided to account for repairs not shown.

Drill and grout p21(E) bars to minimum depth shown according to Article 584 of the Standard Specifications.

Temporary Shoring and Cribbing is required for beams at the locations shown. Temporary Shoring and Cribbing is to be designed by the Contractor according to the Special Provisions "Structural Repair of Concrete" and "Temporary Shoring and Cribbing."

Beam reactions are provided on Sheet SA-19 of SA-28. The contractor shall verify the equipment used to support the beams is sufficient to carry these loads in addition to any temporary construction loads.

LEGEND

- Structural Repair of Concrete Depth Equal To or Less Than 5 Inches
- Structural Repair of Concrete Depth Greater Than 5 Inches
- Epoxy Crack Injection

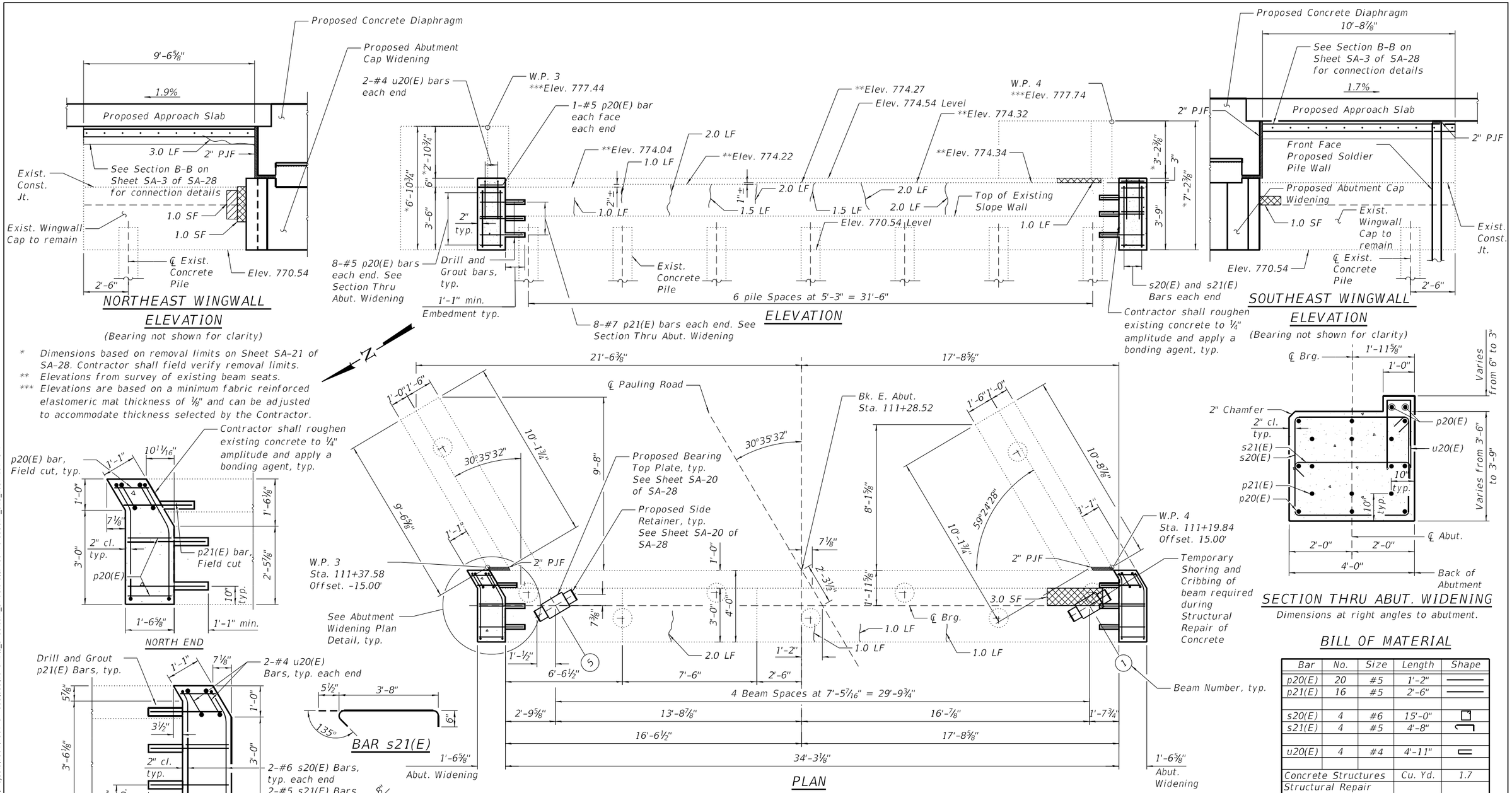

Notes:

Repair areas and crack length shown are intended as a guide for bidding purposes. Actual repair areas shall be determined in the field by the Engineer. A nominal amount of additional repair quantities have been provided to account for repairs not shown.

Drill and grout p21(E) bars to minimum depth shown according to Article 584 of the Standard Specifications.

Temporary Shoring and Cribbing is required for beams at the locations shown. Temporary Shoring and Cribbing is to be designed by the Contractor according to the Special Provisions "Structural Repair of Concrete" and "Temporary Shoring and Cribbing."

Beam reactions are provided on Sheet SA-19 of SA-28. the contractor shall verify the equipment used to support the beams is sufficient to carry these loads in addition to any temporary construction loads.

See Sheet SA-22 of SA-28 for Anchor Bolt Layout Detail.

* Dimensions based on removal limits on Sheet SA-21 of SA-28. Contractor shall field verify removal limits.

** Elevations from survey of existing beam seats.

*** Elevations are based on a minimum fabric reinforced elastomeric mat thickness of ⅛" and can be adjusted to accommodate thickness selected by the Contractor.

LEGEND

- Structural Repair of Concrete Depth Equal To or Less Than 5 Inches
- Structural Repair of Concrete Depth Greater Than 5 Inches
- Epoxy Crack Injection

BILL OF MATERIAL

Bar	No.	Size	Length	Shape
p20(E)	20	#5	1'-2"	
p21(E)	16	#5	2'-6"	
s20(E)	4	#6	15'-0"	
s21(E)	4	#5	4'-8"	
u20(E)	4	#4	4'-11"	
Concrete Structures			Cu. Yd.	1.7
Structural Repair of Concrete Depth Equal To or Less Than 5 Inches			Sq. Ft.	1
Structural Repair of Concrete Depth Greater Than 5 Inches			Sq. Ft.	6
Reinforcement Bars, Epoxy Coated			Pound	190
Epoxy Crack Injection			Foot	21
Temporary Shoring and Cribbing			Each	1

MODEL: Default
FILE NAME: pw:\\atlas-pw.bentley.com:atlas-pw-01\Documents\Projects\1001\1001 CV 008\003\10 CAD\3_Sheets\12_Structural\D160R76-099024_023_EastAbutment
3/7/2025 11:57:04 AM

AEG ATLAS ENGINEERING GROUP, LTD.

USER NAME =	DESIGNED - JJI	REVISED -	
	CHECKED - JKL	REVISED -	
PLOT SCALE =	DRAWN - JJI	REVISED -	
PLOT DATE =	CHECKED - 6/21/2024	REVISED -	

STATE OF ILLINOIS
DEPARTMENT OF TRANSPORTATION

EAST ABUTMENT DETAILS
STRUCTURE NO. 099-0204

SHEET SA-23 OF SA-28 SHEETS

F.A.I RTE.	SECTION	COUNTY	TOTAL SHEETS	SHEET NO.
57	99-1HB-2-BR	WILL	133	71

CONTRACT NO. 60R76

ILLINOIS FED. AID PROJECT

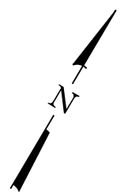

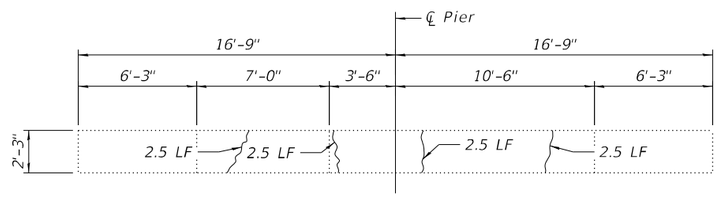

TOP PLAN

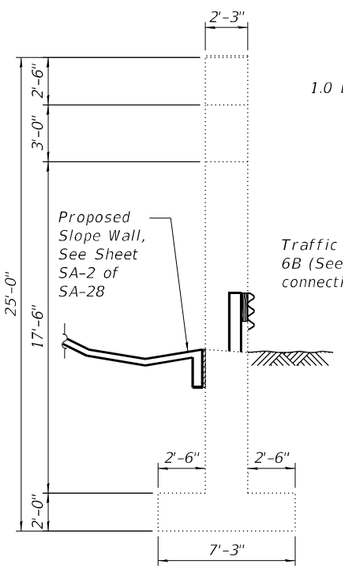

END VIEW
(Looking North)

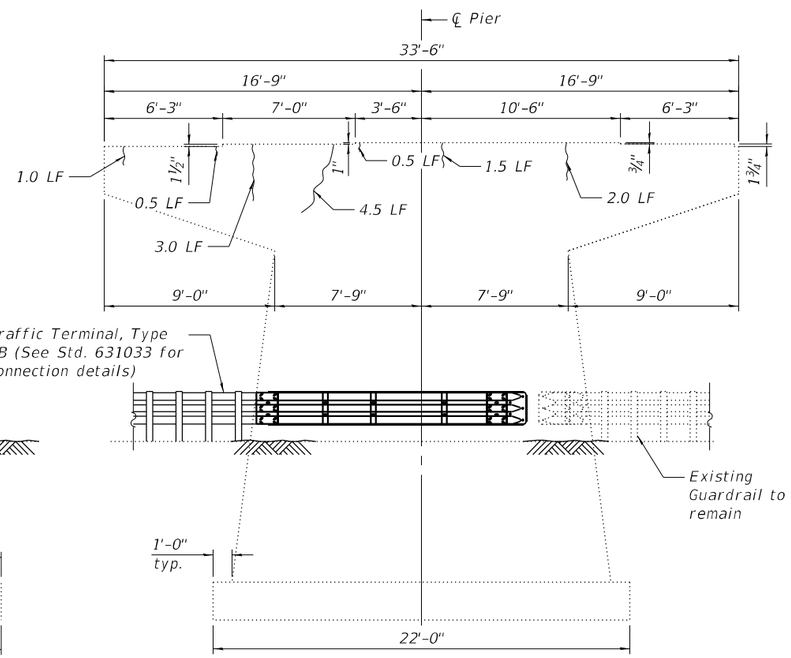

ELEVATION
(Looking West)

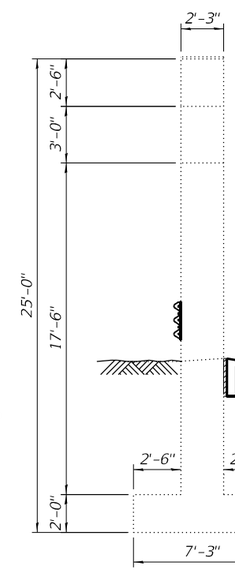

END VIEW
(Looking South)

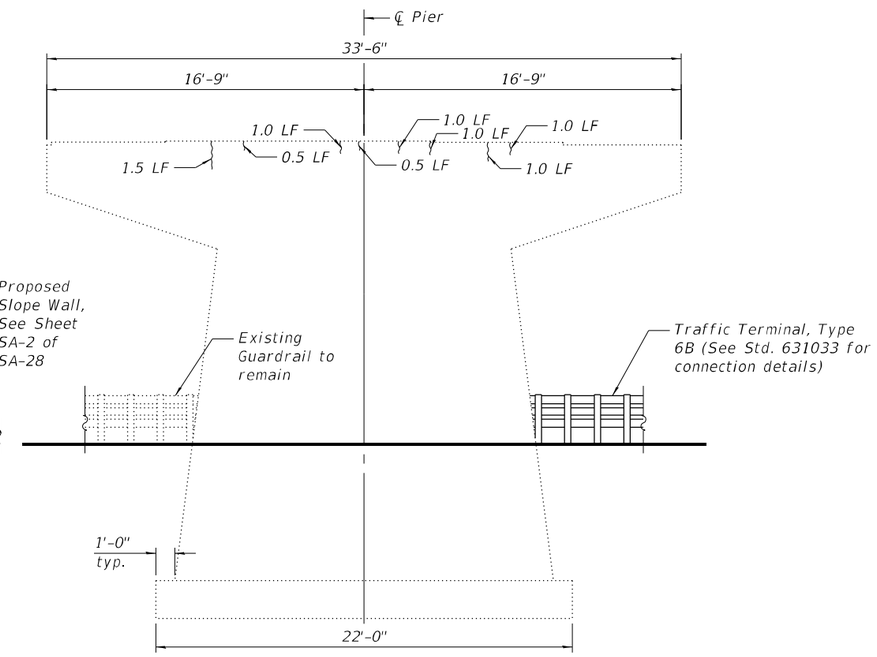

ELEVATION
(Looking East)

LEGEND

{ Epoxy Crack Injection

Note:
Repair crack lengths shown are intended as a guide for bidding purposes. Actual repair lengths shall be determined in the field by the Engineer. A nominal amount of additional repair quantities has been provided to account for repairs not shown.

BILL OF MATERIAL

Item	Unit	Quantity
Epoxy Crack Injection	Foot	31

MODEL: Default
FILE NAME: pw:\\atlas-pw.bentley.com:atlas-pw-01\Documents\Projects\1001\1001 CV 008\003\10 CAD\3_Sheets\12_Structural\D160R76-099024_024_Pier1Repairs

AEG ATLAS ENGINEERING GROUP, LTD.	USER NAME =	DESIGNED - JJI	REVISED -
		CHECKED - JKL	REVISED -
	PLOT SCALE =	DRAWN - JJI	REVISED -
	PLOT DATE =	CHECKED - 6/21/2024	REVISED -

STATE OF ILLINOIS
DEPARTMENT OF TRANSPORTATION

PIER 1 REPAIRS
STRUCTURE NO. 099-0204

SHEET SA-24 OF SA-28 SHEETS

F.A.I RTE.	SECTION	COUNTY	TOTAL SHEETS	SHEET NO.
57	99-1HB-2-BR	WILL	133	72

CONTRACT NO. 60R76

ILLINOIS | FED. AID PROJECT

3/7/2025 11:57:11 AM

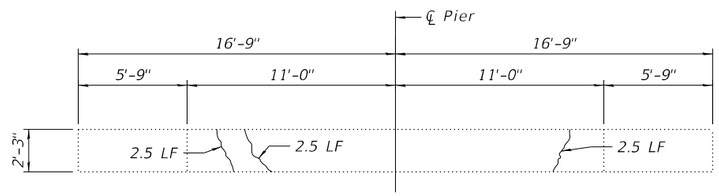

TOP PLAN

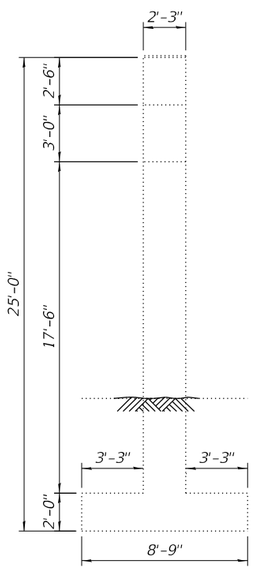

END VIEW
(Looking North)

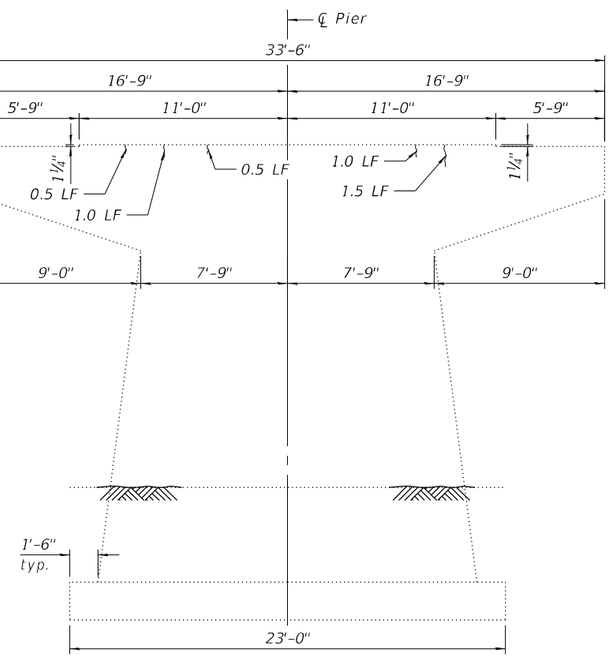

ELEVATION
(Looking West)

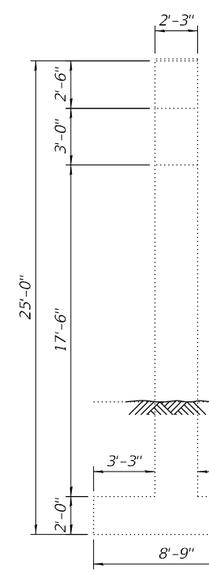

END VIEW
(Looking South)

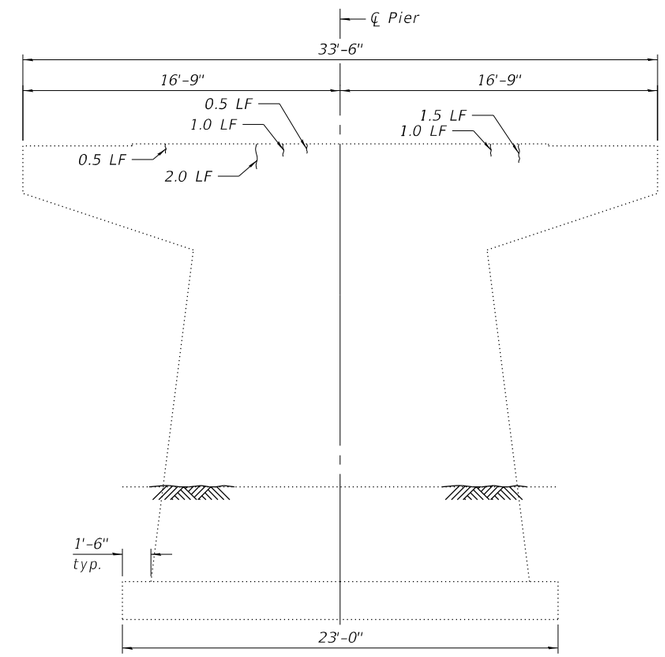

ELEVATION
(Looking East)

LEGEND

{ Epoxy Crack Injection

Note:
Repair crack lengths shown are intended as a guide for bidding purposes. Actual repair lengths shall be determined in the field by the Engineer. A nominal amount of additional repair quantities has been provided to account for repairs not shown.

BILL OF MATERIAL

Item	Unit	Quantity
Epoxy Crack Injection	Foot	19

MODEL: Default
FILE NAME: pw:\\atlas-pw.bentley.com:atlas-pw-01\Documents\Projects\1001\1001 CV 008\003\10 CAD\3_Sheets\12_Structural\D160R76-099024_025_Pier2Repairs

3/7/2025 11:57:19 AM

AEG ATLAS ENGINEERING GROUP, LTD.

USER NAME =	DESIGNED - JJI	REVISED -	
	CHECKED - JKL	REVISED -	
PLOT SCALE =	DRAWN - JJI	REVISED -	
PLOT DATE =	CHECKED - 6/21/2024	REVISED -	

STATE OF ILLINOIS
DEPARTMENT OF TRANSPORTATION

PIER 2 REPAIRS
STRUCTURE NO. 099-0204

SHEET SA-25 OF SA-28 SHEETS

F.A.I RTE.	SECTION	COUNTY	TOTAL SHEETS	SHEET NO.
57	99-1HB-2-BR	WILL	133	73
		CONTRACT NO. 60R76		
	ILLINOIS	FED. AID PROJECT		

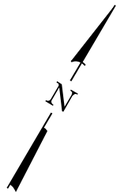

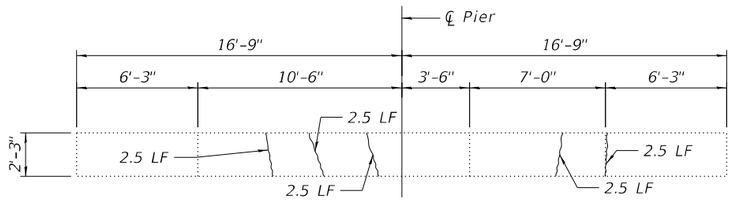

TOP PLAN

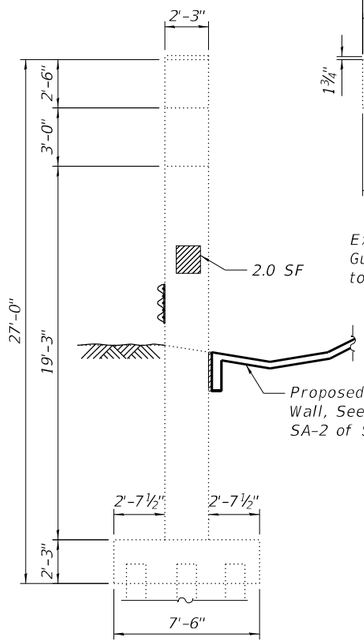

END VIEW
(Looking North)

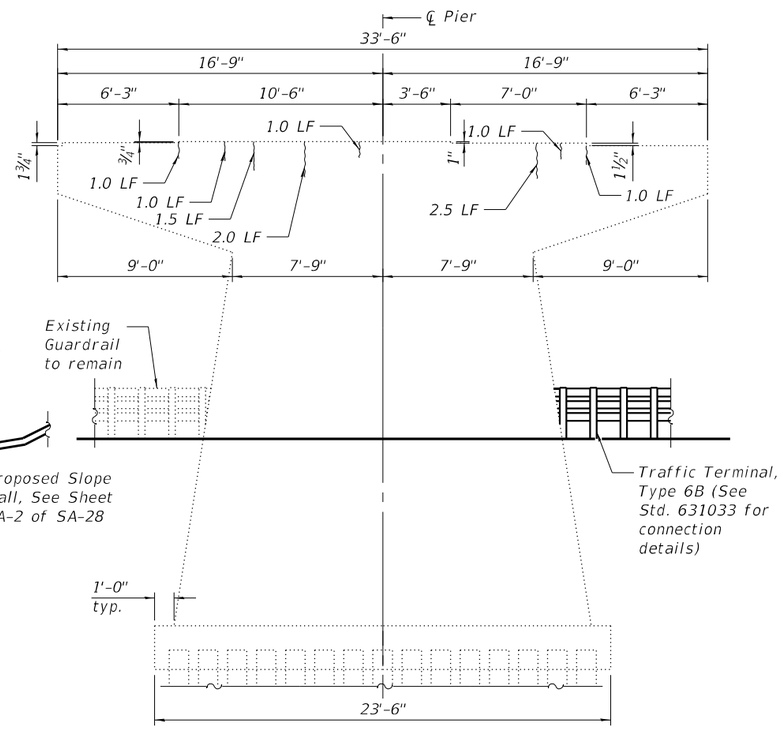

ELEVATION
(Looking West)

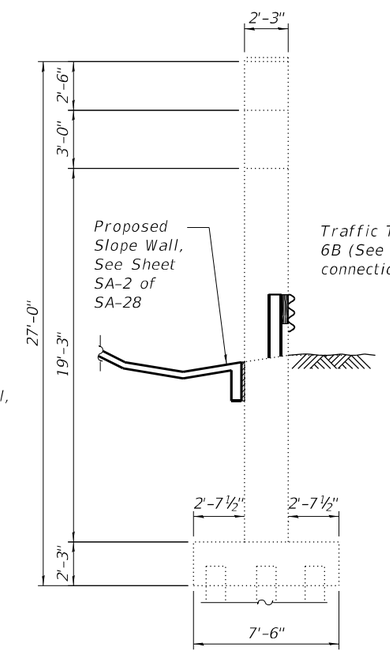

END VIEW
(Looking South)

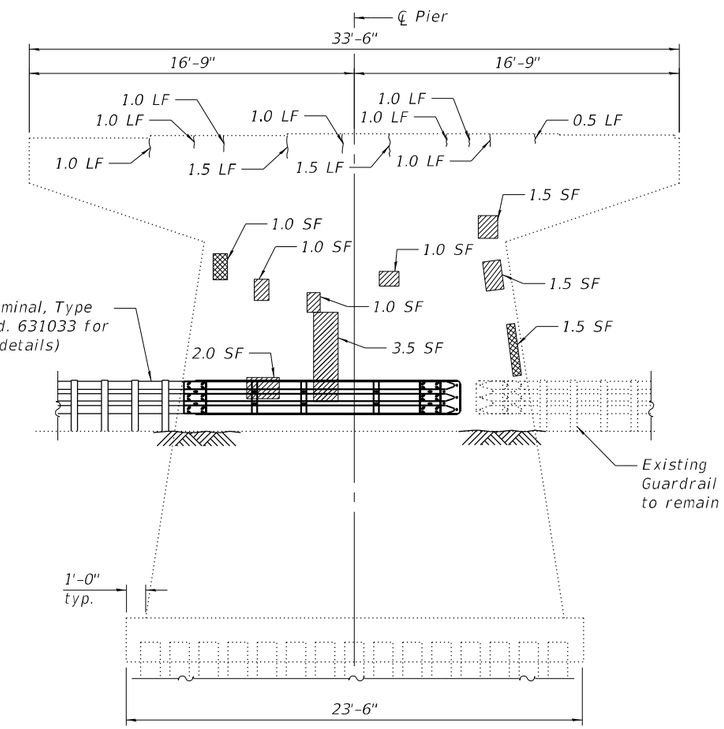

ELEVATION
(Looking East)

Note:
Repair areas and crack lengths shown are intended as a guide for bidding purposes. Actual repair areas shall be determined in the field by the Engineer. A nominal amount of additional repair quantities has been provided to account for repairs not shown.

LEGEND

- Epoxy Crack Injection
- Structural Repair of Concrete (Depth Equal To or Less Than 5 Inches)
- Structural Repair of Concrete (Depth Greater Than 5 Inches)

BILL OF MATERIAL

Item	Unit	Quantity
Epoxy Crack Injection	Foot	34
Structural Repair of Concrete (Depth Equal To or Less Than 5 Inches)	Sq. Ft.	14
Structural Repair of Concrete (Depth Greater Than 5 Inches)	Sq. Ft.	3

MODEL: Default
FILE NAME: pw:\\atlas-pw.bentley.com:atlas-pw-01\Documents\Projects\100111001 CV 008\003\10 CAD\3_Sheets\12_Structural\D160R76-099024_026_Pier3Repairs

3/7/2025 11:57:26 AM

ATLAS ENGINEERING GROUP, LTD.

USER NAME =	DESIGNED - JJI	REVISED -	
	CHECKED - JKL	REVISED -	
PLOT SCALE =	DRAWN - JJI	REVISED -	
PLOT DATE =	CHECKED - 6/21/2024	REVISED -	

STATE OF ILLINOIS
DEPARTMENT OF TRANSPORTATION

PIER 3 REPAIRS
STRUCTURE NO. 099-0204

SHEET SA-26 OF SA-28 SHEETS

F.A.I RTE.	SECTION	COUNTY	TOTAL SHEETS	SHEET NO.
57	99-1HB-2-BR	WILL	133	74
		CONTRACT NO. 60R76		
	ILLINOIS	FED. AID PROJECT		

Illinois Department of Transportation
Division of Highways
GSG

SOIL BORING LOG

Date 9/30/22

ROUTE Pauling Road DESCRIPTION Subgrade Boring LOGGED BY EH

SECTION I-57 at Pauling Road LOCATION , SEC. 31, TWP. 34N, RNG. 13E,
Latitude , Longitude

COUNTY WILL DRILLING RIG D50 Green Rig HAMMER TYPE AUTO
DRILLING METHOD HSA HAMMER EFF (%) 99.5

STRUCT. NO.
Station

BORING NO. SGB-3
Station 108+44.2138
Offset 10.58ft RT
Ground Surface Elev. 777.64 ft

Surface Water Elev. N/A ft
Stream Bed Elev. N/A ft

Groundwater Elev.:
First Encounter None ft
Upon Completion N/A ft
After N/A Hrs. N/A ft

Description	Elev.	DEPTH (ft)	BLOWS (/6")	UCS Qu (tsf)	MOIST (%)
5 inches of Asphalt	777.22				
5 inches of Aggregate Base	776.81				
Gray, Brown, and Black, Moist to Very Moist FILL: SILTY CLAY, trace gravel			3		
			5 6	5.0 B	22
			5		
			5 6	5.0 B	16
		-5			
			3		
			3 3	2.1 B	18
			3		
			4 6	3.3 B	23
		-10			
			2		
			3 5	2.1 B	26
			3		
			4 6	2.9 B	22
		-15			
			5		
			6 7	5.0 B	19
			9		
			5 7	4.5 P	18
		-20			
Gray, Brown, and Black, Moist to Very Moist FILL: SILTY CLAY, trace gravel *(continued)*			3		
			4 6	2.9 B	26
			4		
			5 7	2.9 B	18
		-25			
	751.64				
Very Stiff Brown, Moist SILTY CLAY (CL/ML)			5		
			8 10	3.8 B	16
	749.14				
Very Stiff Gray, Moist SILTY CLAY (CL/ML)			6		
			7 7	2.5 B	15
		-30			
			4		
			6 6	2.5 B	16
		-35			
			4		
			7 9	2.9 B	16
		-40			

The Unconfined Compressive Strength (UCS) Failure Mode is indicated by (B-Bulge, S-Shear, P-Penetrometer)
The SPT (N value) is the sum of the last two blow values in each sampling zone (AASHTO T206)

BBS, form 137 (Rev. 8-99)

Illinois Department of Transportation
Division of Highways
GSG

SOIL BORING LOG

Date 9/30/22

ROUTE Pauling Road DESCRIPTION Subgrade Boring LOGGED BY EH

SECTION I-57 at Pauling Road LOCATION , SEC. 31, TWP. 34N, RNG. 13E,
Latitude , Longitude

COUNTY WILL DRILLING RIG D50 Green Rig HAMMER TYPE AUTO
DRILLING METHOD HSA HAMMER EFF (%) 99.5

STRUCT. NO.
Station

BORING NO. SGB-3
Station 108+44.2138
Offset 10.58ft RT
Ground Surface Elev. 777.64 ft

Surface Water Elev. N/A ft
Stream Bed Elev. N/A ft

Groundwater Elev.:
First Encounter None ft
Upon Completion N/A ft
After N/A Hrs. N/A ft

Description	Elev.	DEPTH (ft)	BLOWS (/6")	UCS Qu (tsf)	MOIST (%)
Very Stiff Gray, Moist SILTY CLAY (CL/ML) *(continued)*			4		
			6 7	2.9 B	14
	732.64	-45			
End of Boring					
		-50			
		-55			
		-60			

The Unconfined Compressive Strength (UCS) Failure Mode is indicated by (B-Bulge, S-Shear, P-Penetrometer)
The SPT (N value) is the sum of the last two blow values in each sampling zone (AASHTO T206)

BBS, form 137 (Rev. 8-99)

MODEL: Default
FILE NAME: pw:\\atlas-pw.bentley.com:atlas-pw-01\Documents\Projects\10011\1001 CV 008\003\10 CAD\3_Sheets\12_Structural\D160R76-099024_027_BoringLogs1

AEG ATLAS ENGINEERING GROUP, LTD.

USER NAME =	DESIGNED - JJI	REVISED -
	CHECKED - JKL	REVISED -
PLOT SCALE =	DRAWN - JJI	REVISED -
PLOT DATE =	CHECKED - 6/21/2024	REVISED -

STATE OF ILLINOIS
DEPARTMENT OF TRANSPORTATION

BORING LOGS
STRUCTURE NO. 099-0204
SHEET SA-27 OF SA-28 SHEETS

F.A.I RTE.	SECTION	COUNTY	TOTAL SHEETS	SHEET NO.
57	99-1HB-2-BR	WILL	133	75
		CONTRACT NO. 60R76		
		ILLINOIS FED. AID PROJECT		

3/7/2025 11:57:33 AM

Illinois Department of Transportation
Division of Highways
GSG Consultants, Inc.

SOIL BORING LOG

Date 9/29/22

ROUTE Pauling Road DESCRIPTION Subgrade Boring LOGGED BY EH

SECTION I-57 at Pauling Road LOCATION , SEC. 31, TWP. 34N, RNG. 13E,
Latitude , Longitude

COUNTY WILL DRILLING RIG D50 Green Rig HAMMER TYPE AUTO
DRILLING METHOD HSA HAMMER EFF (%) 99.5

STRUCT. NO.
Station

BORING NO. SGB-4
Station 111+75.3357
Offset 6.29ft LT
Ground Surface Elev. 777.73 ft

Surface Water Elev. N/A ft
Stream Bed Elev. N/A ft

Groundwater Elev.:
First Encounter None ft
Upon Completion N/A ft
After N/A Hrs. N/A ft

Description	Elev.	DEPTH (ft)	BLOWS (/6")	UCS Qu (tsf)	MOIST (%)
6 inches of Asphalt	777.23				
6 inches of Aggregate Base	776.73				
Brown, Gray and Black, Moist to Very Moist FILL: CLAY, trace gravel			6		
			3	3.0	19
			4	P	
			4		
			4	2.5	18
		-5	4	B	
			2		
			2	1.7	23
			4	B	
			3		
			3	2.5	15
		-10	5	B	
			4		
			4	3.3	17
			5	B	
			2		
			2	2.9	22
		-15	3	B	
			3		
			3	2.1	22
			2	B	
			4		
			5	3.5	19
		-20	7	P	
Brown, Gray and Black, Moist to Very Moist FILL: CLAY, trace gravel *(continued)*			2		
			4	3.3	18
Asphalt fragments encountered at 22 feet			14	B	
			4		
			6	2.5	25
		-25	8	B	
	751.73				
Stiff to Very Stiff Brown and Gray, Very Moist SILTY CLAY, trace gravel (CL-ML)			3		
			3	2.1	29
			4	B	
			3		
			6	1.0	25
		-30	5	P	
	744.23				
Stiff to Very Stiff Gray, Moist SILTY CLAY (CL/ML)			3		
			5	2.1	13
		-35	7	B	
			3		
			4	2.1	18
		-40	6	B	

The Unconfined Compressive Strength (UCS) Failure Mode is indicated by (B-Bulge, S-Shear, P-Penetrometer)
The SPT (N value) is the sum of the last two blow values in each sampling zone (AASHTO T206)

BBS, form 137 (Rev. 8-99)

Illinois Department of Transportation
Division of Highways
GSG

SOIL BORING LOG

Date 9/29/22

ROUTE Pauling Road DESCRIPTION Subgrade Boring LOGGED BY EH

SECTION I-57 at Pauling Road LOCATION , SEC. 31, TWP. 34N, RNG. 13E,
Latitude , Longitude

COUNTY WILL DRILLING RIG D50 Green Rig HAMMER TYPE AUTO
DRILLING METHOD HSA HAMMER EFF (%) 99.5

STRUCT. NO.
Station

BORING NO. SGB-4
Station 111+73.9986
Offset 14.05ft LT
Ground Surface Elev. 776.69 ft

Surface Water Elev. N/A ft
Stream Bed Elev. N/A ft

Groundwater Elev.:
First Encounter None ft
Upon Completion N/A ft
After N/A Hrs. N/A ft

Description	Elev.	DEPTH (ft)	BLOWS (/6")	UCS Qu (tsf)	MOIST (%)
Stiff to Very Stiff Gray, Moist SILTY CLAY (CL/ML) *(continued)*					
			3		
			5	1.7	19
	731.69	-45	6	B	
End of Boring					
		-50			
		-55			
		-60			

The Unconfined Compressive Strength (UCS) Failure Mode is indicated by (B-Bulge, S-Shear, P-Penetrometer)
The SPT (N value) is the sum of the last two blow values in each sampling zone (AASHTO T206)

BBS, form 137 (Rev. 8-99)

MODEL: Default
FILE NAME: pw:\\atlas-pw.bentley.com:atlas-pw-01\Documents\Projects\10011\1001 CV 008\003\10 CAD\3_Sheets\12_Structural\D160R76-099024_028_BoringLogs.dgn

AEG ATLAS ENGINEERING GROUP, LTD.

USER NAME =	DESIGNED - JJI	REVISED -
	CHECKED - JKL	REVISED -
PLOT SCALE =	DRAWN - JJI	REVISED -
PLOT DATE =	CHECKED - 6/21/2024	REVISED -

STATE OF ILLINOIS
DEPARTMENT OF TRANSPORTATION

BORING LOGS
STRUCTURE NO. 099-0204
SHEET SA-28 OF SA-28 SHEETS

F.A.I RTE.	SECTION	COUNTY	TOTAL SHEETS	SHEET NO.
57	99-1HB-2-BR	WILL	133	76
		CONTRACT NO. 60R76		
		ILLINOIS FED. AID PROJECT		

3/7/2025 11:57:48 AM

Benchmark: Mag Nail Set Sta. 108+06.59, Offset 12.64' LT, Elev. 776.90.

Existing Structure: None

Traffic on Pauling Road will be detoured.

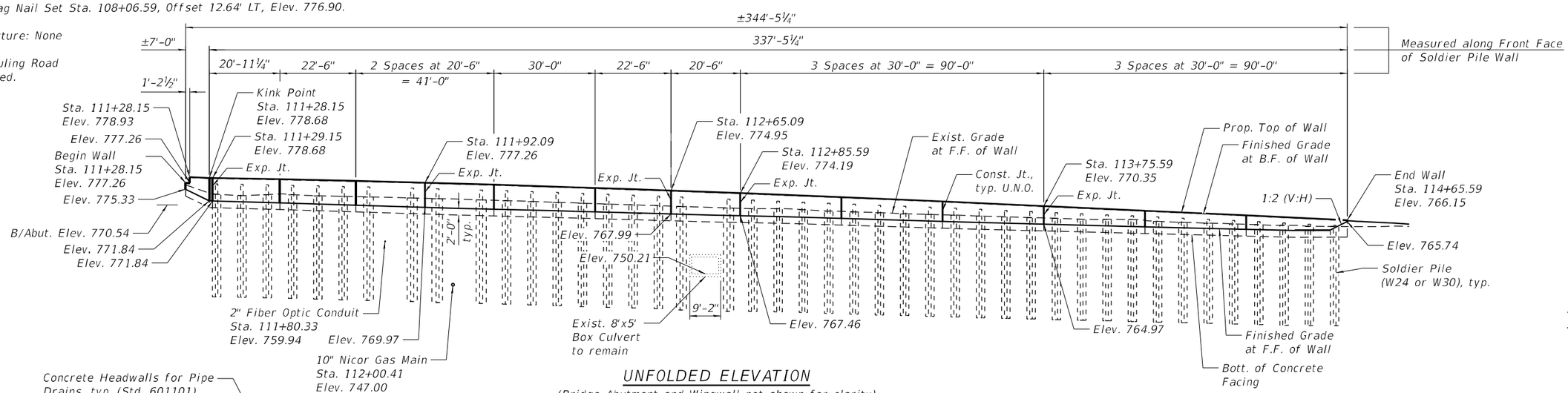

UNFOLDED ELEVATION

(Bridge Abutment and Wingwall not shown for clarity)

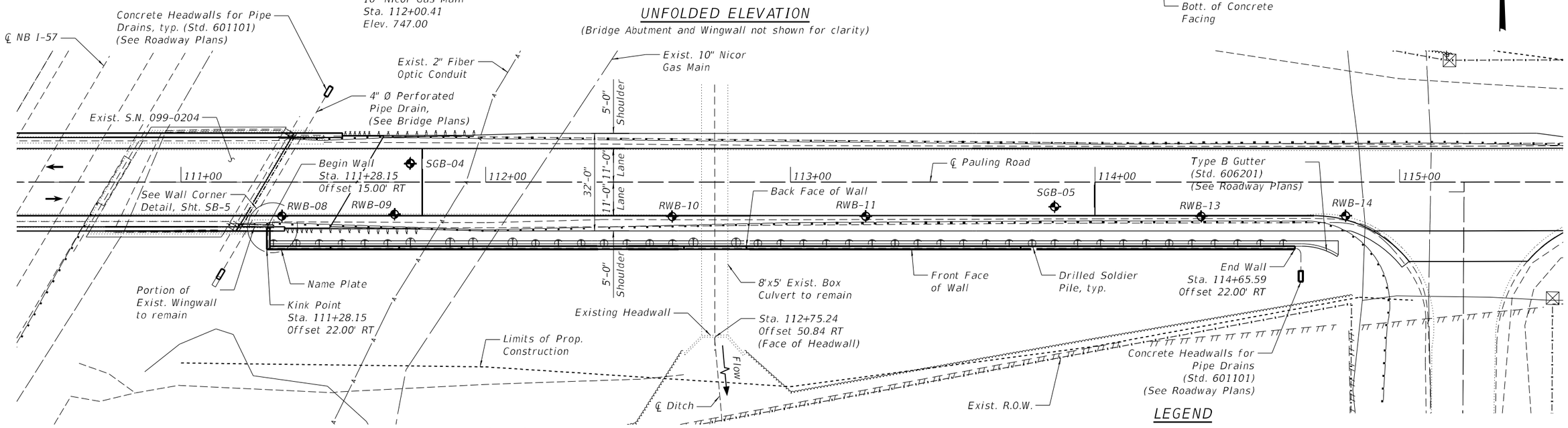

PLAN

APPROVED
For Structural Adequacy Only
Engineer of Bridges & Structures

Notes:

1. Stations and offsets are measured from CL Pauling Road to the front face of the cast-in-place concrete facing.
2. The Contractor shall exercise caution during wall construction to make certain that construction activities will not have detrimental effects on the existing utilities and other facilities.
3. The utility depth as shown is based on electronic depth determined during survey. Contractor to verify location of utilities in the field prior to pile installation. Space soldier piles to miss existing fiber optic conduit and Nicor gas main.

DESIGN SPECIFICATIONS

2020 AASHTO LRFD Bridge Design Specifications, 9th Edition

DESIGN STRESSES

FIELD UNITS

f'c = 3,500 psi
fy = 60,000 psi (Reinforcement)
fy = 50,000 psi (M270 Grade 50)

STATE OF ILLINOIS
MICHAEL B. QUIRIN
081-006070
CHICAGO, IL
LICENSED STRUCTURAL ENGINEER

Signed: Michael B. Quirin
Date: 12/20/2024
Expires: 11/30/2026
Sheets: SB-1 thru SB-16

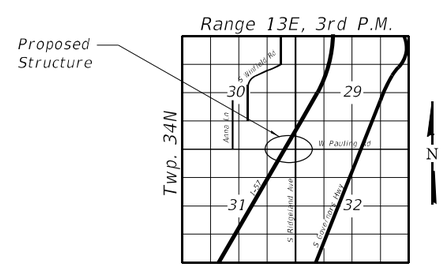

LOCATION SKETCH

LEGEND

- Existing Underground Fiber Optic
- Existing Underground Gasline
- Existing Aerial Line
- Existing Telephone
- Existing Buried Electric
- Existing Fence
- Soil Boring
- U.N.O. Unless Noted Otherwise
- F.F. Front Face
- Prop. Guardrail
- Exist. Guardrail

GENERAL PLAN AND ELEVATION
I-57 AT PAULING ROAD
SECTION 99-1HB-2-BR
WILL COUNTY
STATION 111+28.15 TO 114+65.59
STRUCTURE NO. 099-W1000

HDR 9450 W. BRYN MAWR AVE. ROSEMONT, IL 60018	USER NAME = untitled	DESIGNED - CHP	REVISED -
		CHECKED - BHS	REVISED -
	PLOT SCALE = 100:0.0000 ':" / in.	DRAWN - JM	REVISED -
	PLOT DATE = 12/20/2024	CHECKED - MBQ	REVISED -

STATE OF ILLINOIS
DEPARTMENT OF TRANSPORTATION

GENERAL PLAN AND ELEVATION
STRUCTURE NO. 099-W1000

SHEET SB-1 OF SB-16 SHEETS

F.A.I. RTE.	SECTION	COUNTY	TOTAL SHEETS	SHEET NO.
57	99-1HB-2-BR	WILL	133	77
		CONTRACT NO. 60R76		
		ILLINOIS FED. AID PROJECT		

MODEL: Default
FILE NAME: pw:\\atlas-pw.bentley.com:atlas-pw-01\Documents\Projects\100111001 CV 008\003\10 CAD\3_Sheets\12_Structural\Retaining Wall\099W1000-D160R76-XX-GPE-01.dgn
12/20/2024 2:25:38 PM

GENERAL NOTES

1. Reinforcement bars designated (E) shall be epoxy coated.

2. Protective Coat shall be applied to exposed surfaces of the concrete facing.

3. Plan dimensions and details relative to existing plans are subject to nominal construction variations. The Contractor shall field verify existing dimensions and details affecting new construction and make necessary approved adjustments prior to construction or ordering of materials. Such variation shall not be cause for additional compensation for a change in scope of work, however, the Contractor will be paid for the quantity actually furnished at the unit price bid for the work.

4. The Contractor is responsible for the design and performance of the lagging using no less than a 3 in. nominal rough-sawn thickness and timber with a minimum allowable bending stress of 1000 psi. Contractor shall submit a lagging design sealed by an Illinois Licensed Structural Engineer for review and approval. Alternative lagging materials as approved by Engineer may be used for the pile spaces over culvert, fiber optic line, and gas main. The cost to design, furnish and install alternate lagging materials shall be included in the cost of Untreated Timber Lagging.

5. Fasteners shall be ASTM F3125 Grade A325 Type 1, mechanically galvanized bolts. Bolts ¾ in. diameter, holes $^{13}/_{16}$ in. diameter, unless otherwise noted.

6. All structural steel shall be AASHTO M270 Grade 50.

7. Furnishing and installing of ¾" Dia. expansion anchors is included in the cost of Concrete Structures.

SUGGESTED SEQUENCE OF CONSTRUCTION

1. Locate all existing utilities that are to remain. The Contractor shall coordinate any required improvements to, or removal of, existing utilities with utility owners(s) and IDOT.

2. Excavate at the existing bridge wingwall as required to install the steel angle attached to the existing wingwall. Backfill to original contours. Required excavation and backfilling is included in the cost of Concrete Structures.

3. Attach W14x68 to Pile 1 as shown in the Wall Corner Detail on Sht. SB-5 prior to setting pile.

4. Install Drilled Soldier Piles for the proposed retaining wall.

5. Excavate as required to install the untreated timber lagging between the drilled soldier piles and at the wall corner from top down as excavation proceeds.

6. Install Geocomposite Wall Drain, Pipe Underdrain for Structures and associated drainage elements.

7. Construct reinforced concrete facing for the proposed retaining wall.

8. Construct bridge approach slab.

9. Backfill to proposed grade at front face of retaining wall and apply protective coat to the exposed concrete facing.

INDEX OF SHEETS

SB-1	General Plan and Elevation
SB-2	General Notes, Index & Total Bill of Materials
SB-3	General Details (1 of 3)
SB-4	General Details (2 of 3)
SB-5	General Details (3 of 3)
SB-6	Pile Layout
SB-7	Pile Table
SB-8	Reinforcement Details (1 of 5)
SB-9	Reinforcement Details (2 of 5)
SB-10	Reinforcement Details (3 of 5)
SB-11	Reinforcement Details (4 of 5)
SB-12	Reinforcement Details (5 of 5)
SB-13	Soil Boring Logs (1 of 4)
SB-14	Soil Boring Logs (2 of 4)
SB-15	Soil Boring Logs (3 of 4)
SB-16	Soil Boring Logs (4 of 4)

STA. 111+28.15 TO 114+65.59
BUILT 20__ BY
STATE OF ILLINOIS
F.A.I. RTE. 57 SEC. 99-1HB-2-BR
LOADING HL-93
STR. NO. 099-W1000

NAME PLATE

See Std. 515001

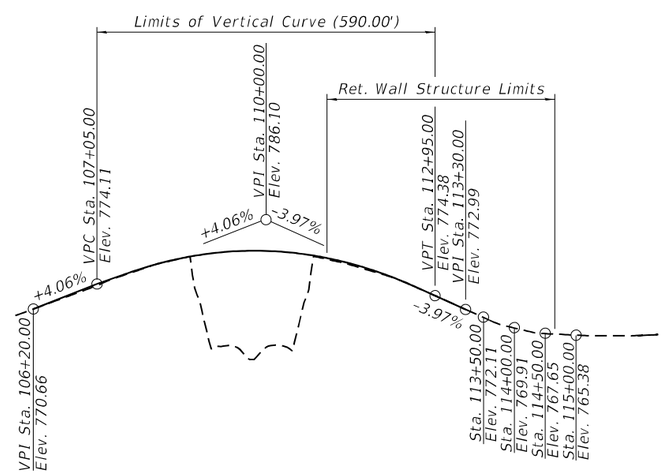

PROPOSED PROFILE GRADE

(Along ℄ Pauling Road)

TOTAL BILL OF MATERIAL

ITEM	UNIT	SUPER	SUB	TOTAL
Porous Granular Backfill	Cu Yd	139	--	139
Structure Excavation	Cu Yd	165	--	165
Concrete Structures	Cu Yd	102.8	--	102.8
Protective Coat	Sq Yd	273	--	273
Furnishing And Erecting Structural Steel	Pound	800	--	800
Stud Shear Connectors	Each	597	--	597
Reinforcement Bars, Epoxy Coated	Pound	14,350	--	14,350
Name Plates	Each	1	--	1
Furnishing Soldier Piles (W Section)	Foot	1,441	--	1,441
Drilling And Setting Soldier Piles (In Soil)	Cu Ft	6,794	--	6,794
Untreated Timber Lagging	Sq Ft	2,120	--	2,120
Geocomposite Wall Drain	Sq Yd	185	--	185
Pipe Underdrains For Structures 4"	Foot	387	--	387

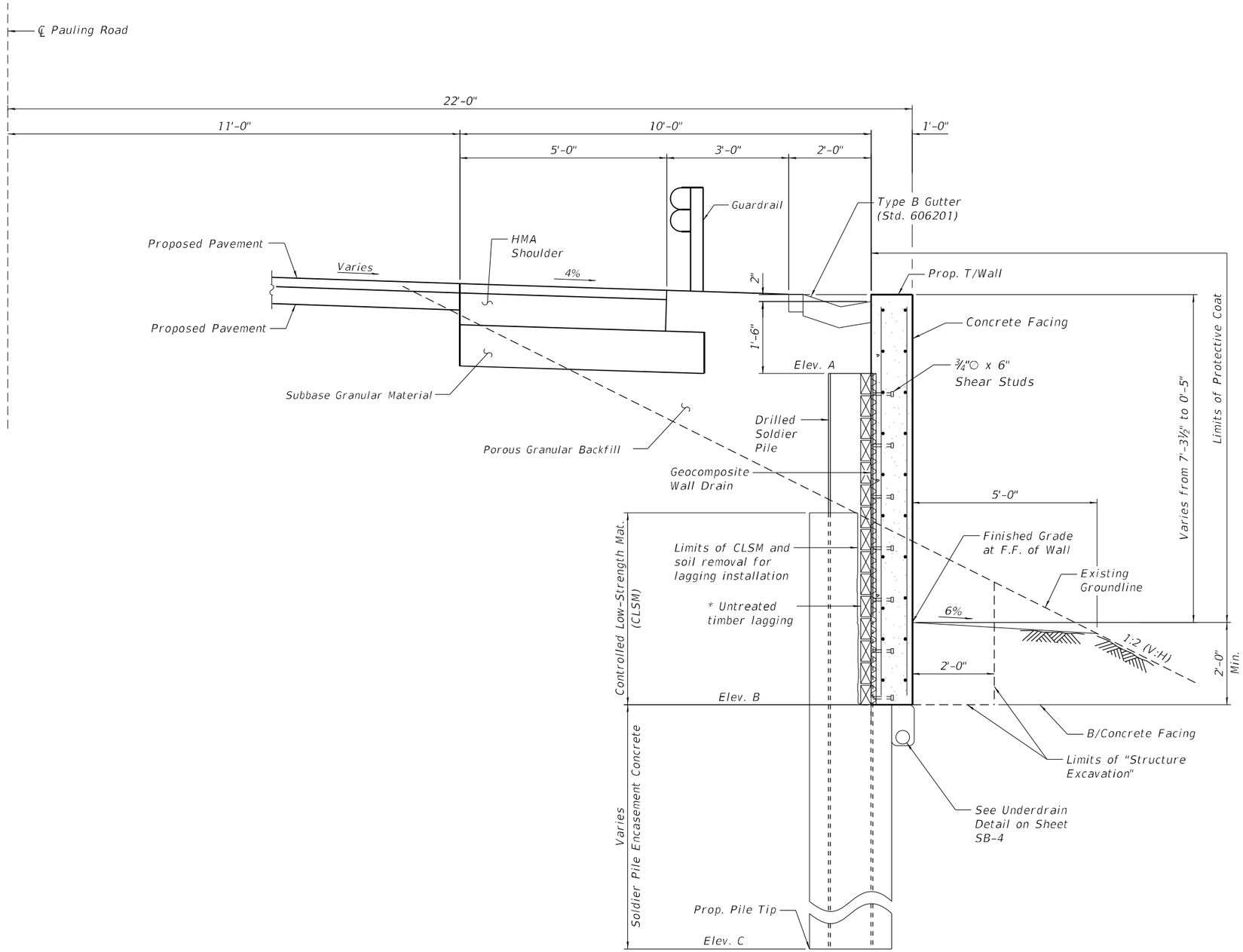

* Alternative lagging materials may be used for the pile spaces over culvert, fiber optic line, and gas main. See General Note 4.

Note:
For Elevation A, B and C, see Pile Table on Sheet SB-7 of SB-16.

TYPICAL WALL SECTION

(Looking East)

MODEL: Default
FILE NAME: pw:\\atlas-pw.bentley.com:atlas-pw-01\Documents\Projects\1001\1001 CV 008\003\10 CAD\3_Sheets\12_Structural\Retaining Wall\099W1000-D160R76-XX-GPE-02.dgn

HDR 9450 W. BRYN MAWR AVE. ROSEMONT, IL 60018	USER NAME = untitled	DESIGNED - CHP	REVISED -	STATE OF ILLINOIS DEPARTMENT OF TRANSPORTATION
		CHECKED - BHS	REVISED -	
	PLOT SCALE = 100:0.0000 ':" / in.	DRAWN - JM	REVISED -	
	PLOT DATE = 12/20/2024	CHECKED - MBQ	REVISED -	

GENERAL DETAILS (1 OF 3)
STRUCTURE NO. 099-W1000

SHEET SB-3 OF SB-16 SHEETS

F.A.I. RTE.	SECTION	COUNTY	TOTAL SHEETS	SHEET NO.
57	99-1HB-2-BR	WILL	133	79
		CONTRACT NO. 60R76		
		ILLINOIS FED. AID PROJECT		

12/20/2024 2:26:44 PM

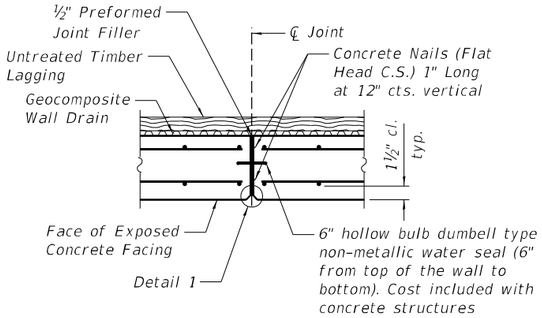

EXPANSION JOINT DETAIL

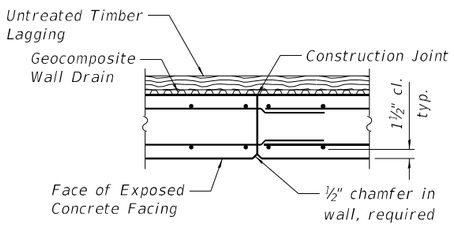

CONSTRUCTION JOINT DETAIL

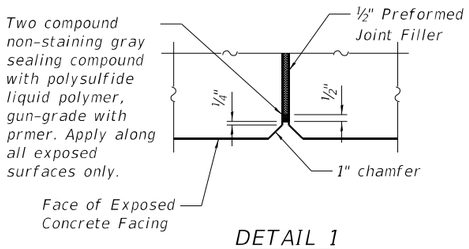

DETAIL 1

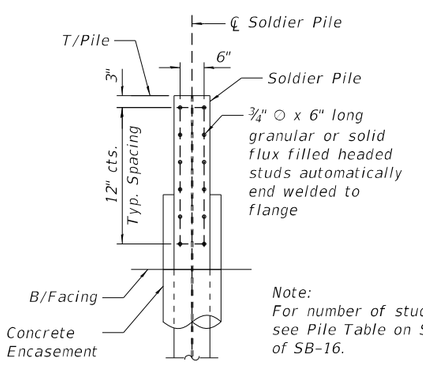

Note:
For number of studs per pile, see Pile Table on Sheet SB-7 of SB-16.

STUD CONNECTION DETAIL

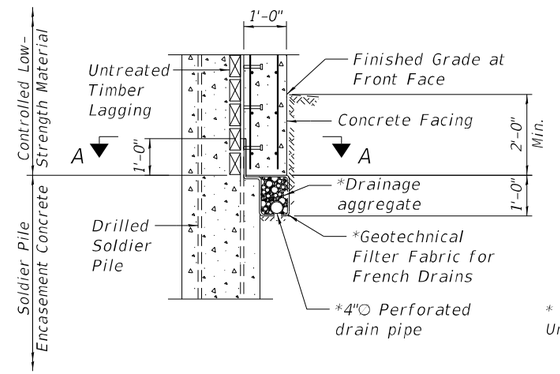

AT SOLDIER PILES

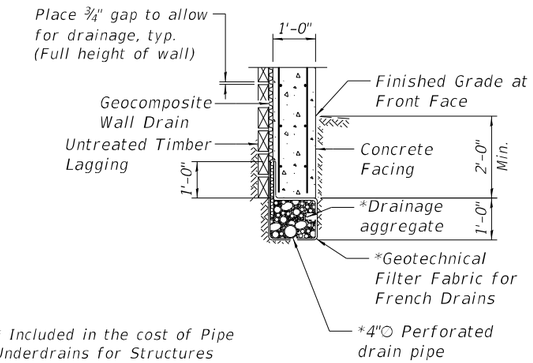

* Included in the cost of Pipe Underdrains for Structures

BETWEEN SOLDIER PILES

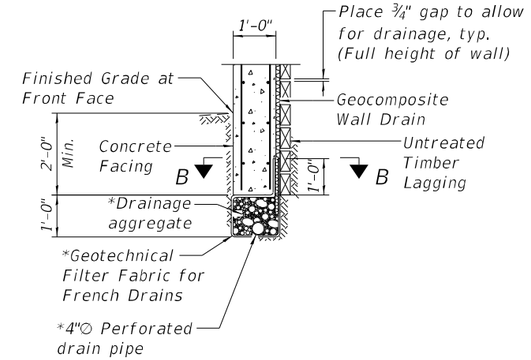

AT PANEL 0

PIPE UNDERDRAIN DETAIL

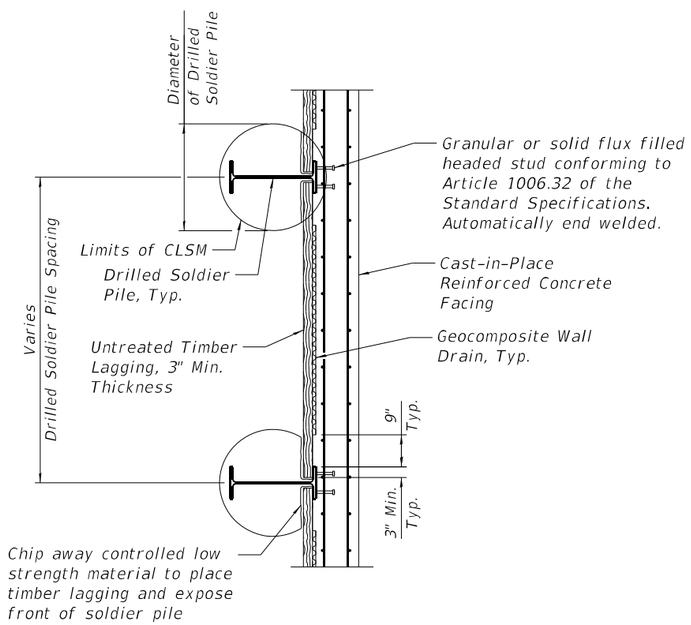

SECTION A-A
(at Soldier Piles)

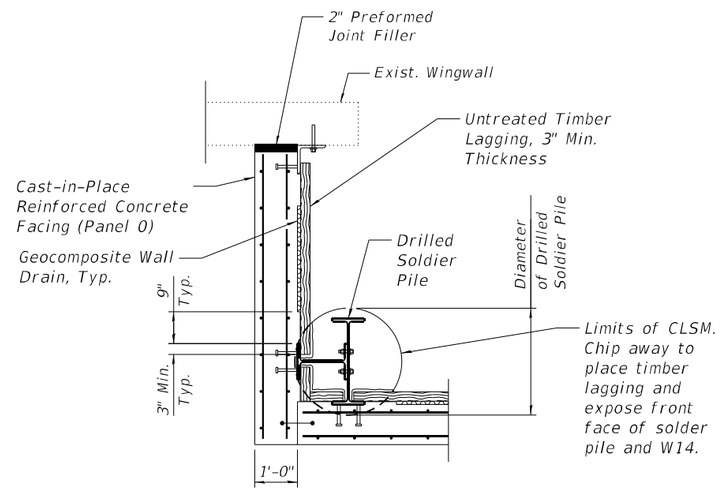

SECTION B-B
(at Wall Corner)

MODEL: Default
FILE NAME: pw:\\atlas-pw.bentley.com:atlas-pw-01\Documents\Projects\100111001 CV 008\003\10 CAD\3_Sheets\12_Structural\Retaining Wall\099W1000-D160R76-XX-GPE-03.dgn

HDR 9450 W. BRYN MAWR AVE. ROSEMONT, IL 60018	USER NAME = untitled	DESIGNED - CHP	REVISED -	STATE OF ILLINOIS DEPARTMENT OF TRANSPORTATION	GENERAL DETAILS (2 OF 3) STRUCTURE NO. 099-W1000	F.A.I. RTE.	SECTION	COUNTY	TOTAL SHEETS / SHEET NO.
		CHECKED - BHS	REVISED -			57	99-1HB-2-BR	WILL	133 / 80
	PLOT SCALE = 100:0.0000 ':" / in.	DRAWN - JM	REVISED -					CONTRACT NO. 60R76	
	PLOT DATE = 12/20/2024	CHECKED - MBQ	REVISED -		SHEET SB-4 OF SB-16 SHEETS		ILLINOIS	FED. AID PROJECT	

12/20/2024 2:27:17 PM

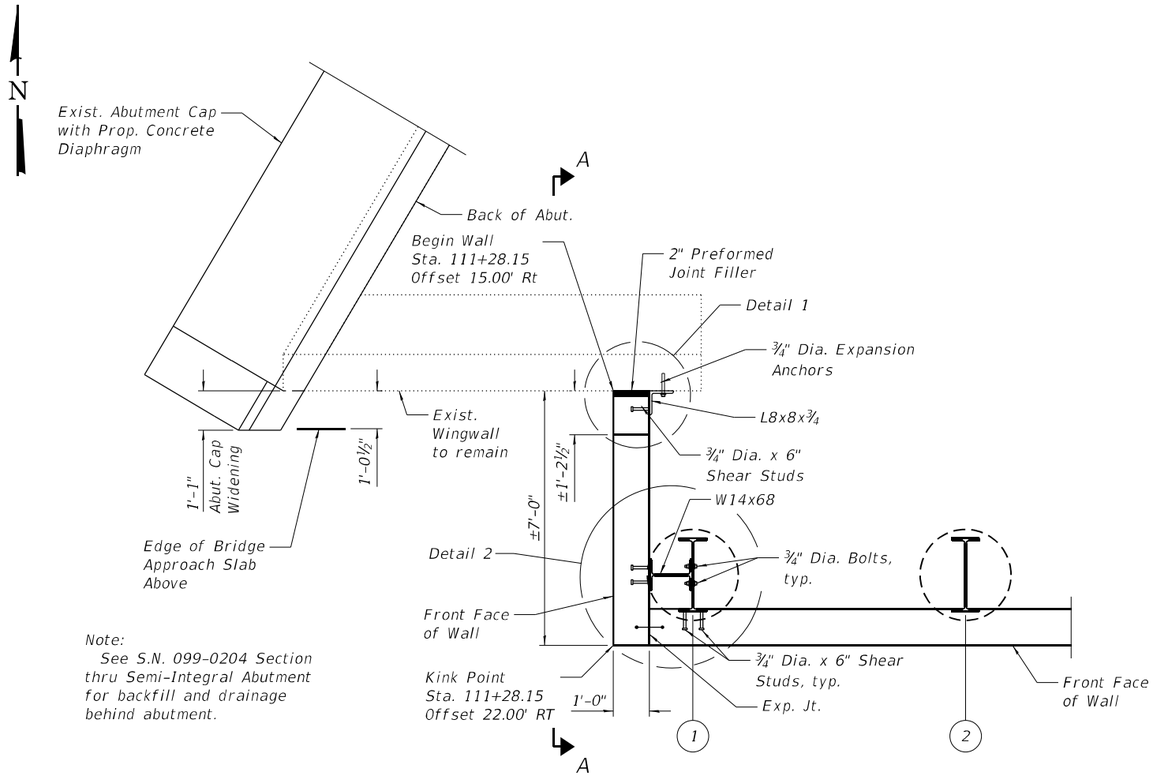

Note:
See S.N. 099-0204 Section thru Semi-Integral Abutment for backfill and drainage behind abutment.

WALL CORNER DETAIL

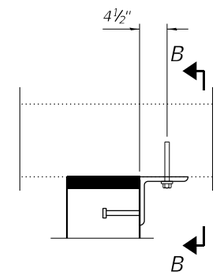

DETAIL 1

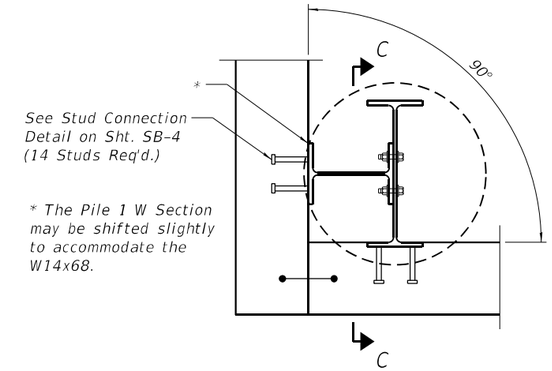

DETAIL 2

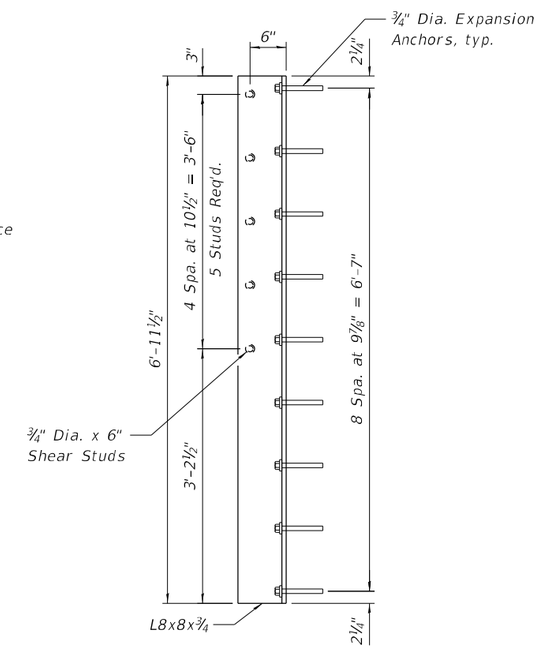

SECTION B-B

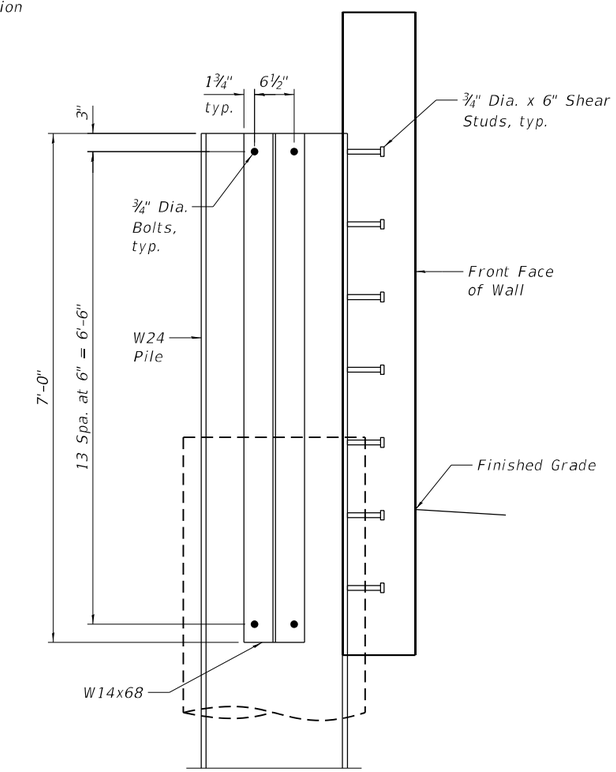

SECTION C-C

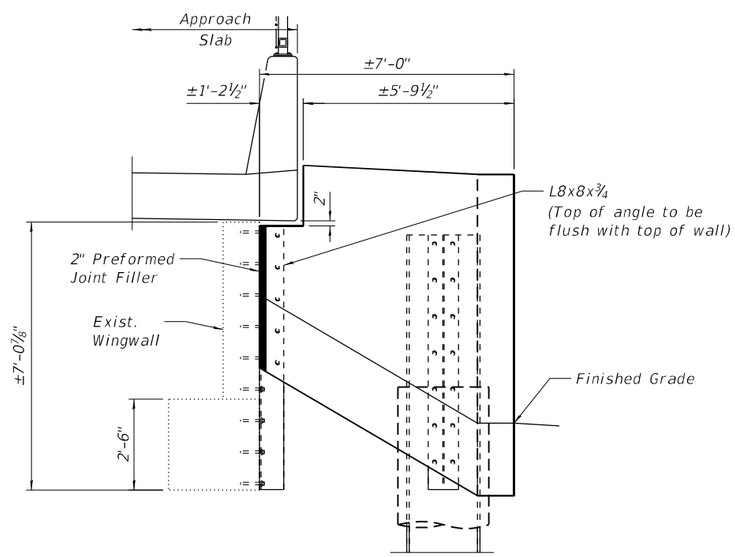

VIEW A-A
(Looking East)

BILL OF MATERIAL

ITEM	UNIT	QUANTITY
Furnishing and Erecting Structural Steel	Pound	800

Note:
Furnishing and Erecting Structural Steel pay item includes the L8x8x¾ and the W14x68 steel members and bolts, nuts and washers.

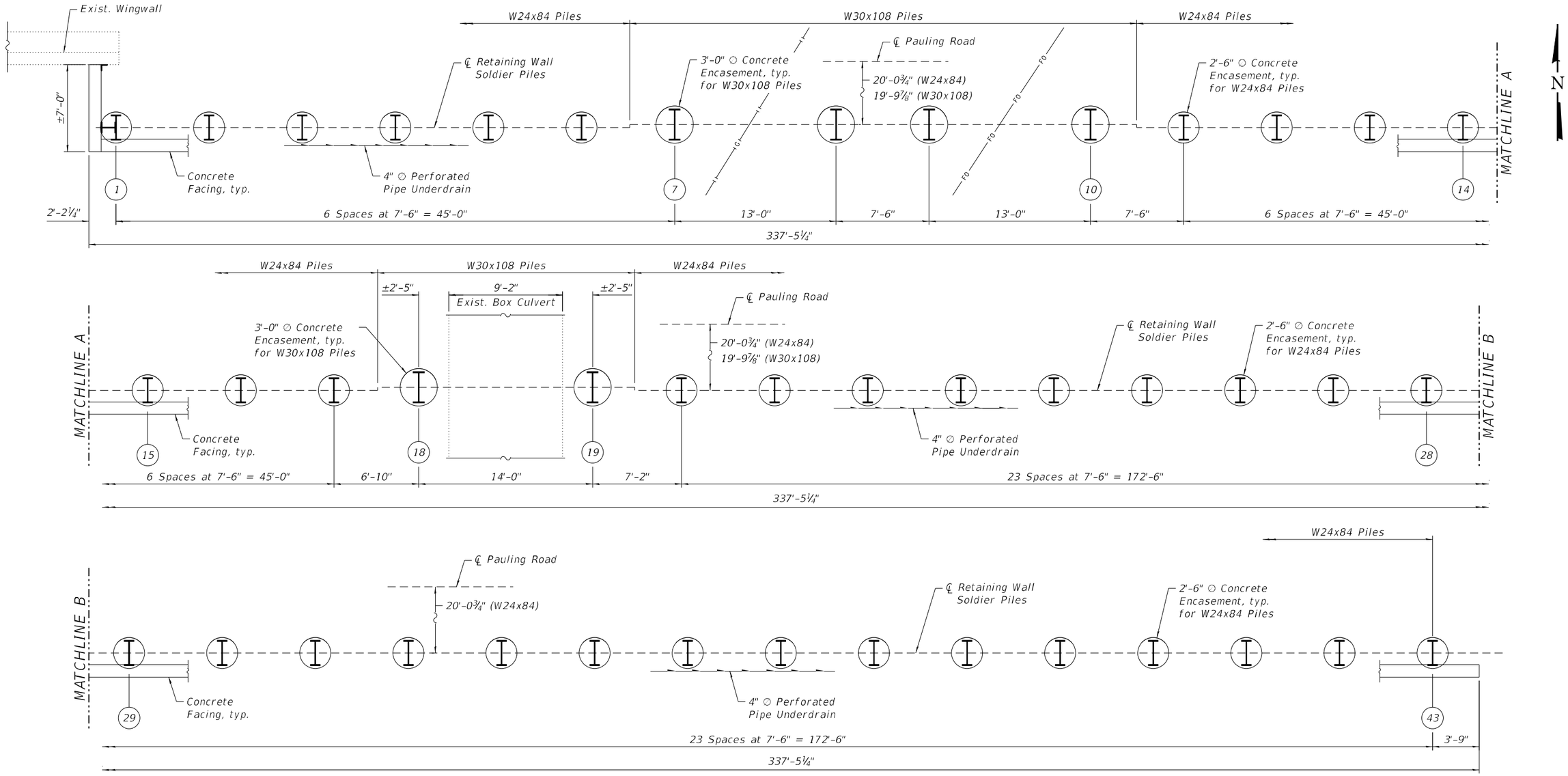

PILE LAYOUT PLAN

Note:
For Pile Table and Soldier Pile Working Point detail, see Sheet SB-7 of SB-16.

LEGEND

FO — Existing Underground Fiber Optic

G — Existing Underground Gasline

MODEL: Default
FILE NAME: pw:\\atlas-pw.bentley.com:atlas-pw-01\Documents\Projects\10011\1001 CV 008\003\10 CAD\3_Sheets\12_Structural\Retaining Wall\099W1000-D160R76-XX-PLA-01.dgn

HDR
9450 W. BRYN MAWR AVE.
ROSEMONT, IL 60018

USER NAME = untitled	DESIGNED - CHP	REVISED -	
	CHECKED - BHS	REVISED -	
PLOT SCALE = 100:0.0000 ':" / in.	DRAWN - JM	REVISED -	
PLOT DATE = 12/20/2024	CHECKED - MBQ	REVISED -	

STATE OF ILLINOIS
DEPARTMENT OF TRANSPORTATION

PILE LAYOUT
STRUCTURE NO. 099-W1000

SHEET SB-6 OF SB-16 SHEETS

F.A.I. RTE.	SECTION	COUNTY	TOTAL SHEETS	SHEET NO.
57	99-1HB-2-BR	WILL	133	82
		CONTRACT NO. 60R76		
		ILLINOIS FED. AID PROJECT		

12/20/2024 2:28:21 PM

PILE TABLE

Pile	1	2	3	4	5	6	7	8	9	10	11	12	13	14	15	16	17	18	19	20	21	22
Type	W24x84	W24x84	W24x84	W24x84	W24x84	W24x84	W30x108	W30x108	W30x108	W30x108	W24x84	W24x84	W24x84	W24x84	W24x84	W24x84	W24x84	W30x108	W30x108	W24x84	W24x84	W24x84
Station at Working Point	111+30.34	111+37.84	111+45.34	111+52.84	111+60.34	111+67.84	111+75.34	111+88.34	111+95.84	112+08.84	112+16.34	112+23.84	112+31.34	112+38.84	112+46.34	112+53.84	112+61.34	112+68.17	112+82.17	112+89.34	112+96.84	113+04.34
Offset at Working Point (Ft)	20.07	20.07	20.07	20.07	20.07	20.07	19.82	19.82	19.82	19.82	20.07	20.07	20.07	20.07	20.07	20.07	20.07	19.82	19.82	20.07	20.07	20.07
Panel Number	1			2			3		4		5				6			7		8		
Elev. A (Top of Soldier Pile)	776.97	776.82	776.66	776.51	776.35	776.20	776.02	775.69	775.49	775.12	774.89	774.65	774.41	774.18	773.93	773.67	773.41	773.17	772.65	772.37	772.08	771.78
Elev. B (Bottom of Concrete Facing)	769.80	769.58	769.37	769.15	768.93	768.71	768.48	768.08	767.86	767.50	767.30	767.10	766.91	766.72	766.52	766.30	766.09	765.91	765.55	765.36	765.17	764.97
Elev. C (Pile Tip Elevation)	743.47	743.32	743.16	743.01	742.85	742.70	742.52	742.19	741.99	741.62	741.39	741.15	740.91	740.68	740.43	740.17	739.91	739.67	739.15	738.87	738.58	738.28
Pile Length	33.50'	33.50'	33.50'	33.50'	33.50'	33.50'	33.50'	33.50'	33.50'	33.50'	33.50'	33.50'	33.50'	33.50'	33.50'	33.50'	33.50'	33.50'	33.50'	33.50'	33.50'	33.50'
No. of Studs	14	14	16	16	16	16	16	16	16	16	16	16	16	16	16	16	16	16	14	14	14	14

Pile	23	24	25	26	27	28	29	30	31	32	33	34	35	36	37	38	39	40	41	42	43
Type	W24x84	W24x84	W24x84	W24x84	W24x84	W24x84	W24x84	W24x84	W24x84	W24x84	W24x84	W24x84	W24x84	W24x84	W24x84	W24x84	W24x84	W24x84	W24x84	W24x84	W24x84
Station at Working Point	113+11.84	113+19.34	113+26.84	113+34.34	113+41.84	113+49.34	113+56.84	113+64.34	113+71.84	113+79.34	113+86.84	113+94.34	114+01.84	114+09.34	114+16.84	114+24.34	114+31.84	114+39.34	114+46.84	114+54.34	114+61.84
Offset at Working Point (Ft)	20.07	20.07	20.07	20.07	20.07	20.07	20.07	20.07	20.07	20.07	20.07	20.07	20.07	20.07	20.07	20.07	20.07	20.07	20.07	20.07	20.07
Panel Number	8	9				10				11				12				13			
Elev. A (Top of Soldier Pile)	771.48	771.18	770.86	770.55	770.23	769.90	769.55	769.20	768.86	768.51	768.16	767.81	767.46	767.11	766.78	766.44	766.10	765.75	765.39	765.03	764.66
Elev. B (Bottom of Concrete Facing)	764.77	764.56	764.34	764.12	763.89	763.68	763.48	763.28	763.08	762.88	762.68	762.49	762.29	762.10	761.91	761.73	761.54	761.41	761.33	761.25	761.17
Elev. C (Pile Tip Elevation)	737.98	737.68	737.36	737.05	736.73	736.40	736.05	735.70	735.36	735.01	734.66	734.31	733.96	733.61	733.28	732.94	732.60	732.25	731.89	731.53	731.16
Pile Length	33.50'	33.50'	33.50'	33.50'	33.50'	33.50'	33.50'	33.50'	33.50'	33.50'	33.50'	33.50'	33.50'	33.50'	33.50'	33.50'	33.50'	33.50'	33.50'	33.50'	33.50'
No. of Studs	14	14	14	14	14	12	12	12	12	12	12	12	10	10	10	10	10	10	8	8	8

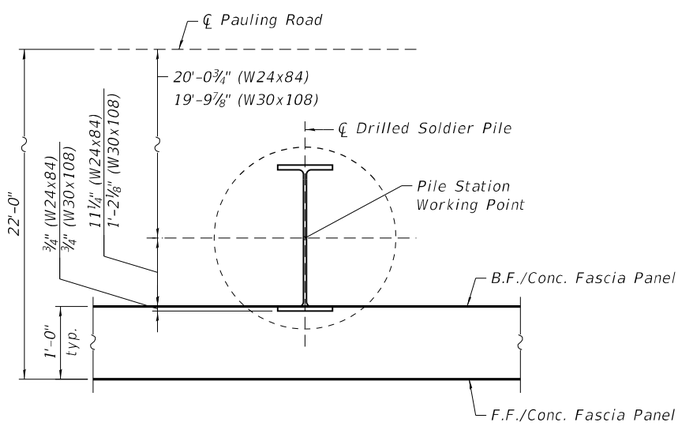

SOLDIER PILE WORKING POINT

MODEL: Default
FILE NAME: pw:\\atlas-pw.bentley.com:atlas-pw-01\Documents\Projects\1001\1001 CV 008\003\10 CAD\3_Sheets\12_Structural\Retaining Wall\099W1000-D160R76-XX-PTA-01.dgn

HDR
9450 W. BRYN MAWR AVE.
ROSEMONT, IL 60018

USER NAME = untitled	DESIGNED - CHP	REVISED -	
	CHECKED - BHS	REVISED -	
PLOT SCALE = 100:0.0000 ':" / in.	DRAWN - JM	REVISED -	
PLOT DATE = 12/20/2024	CHECKED - MBQ	REVISED -	

STATE OF ILLINOIS
DEPARTMENT OF TRANSPORTATION

PILE TABLE
STRUCTURE NO. 099-W1000

SHEET SB-7 OF SB-16 SHEETS

F.A.I. RTE.	SECTION	COUNTY	TOTAL SHEETS	SHEET NO.
57	99-1HB-2-BR	WILL	133	83
		CONTRACT NO. 60R76		
	ILLINOIS	FED. AID PROJECT		

12/20/2024 2:28:53 PM

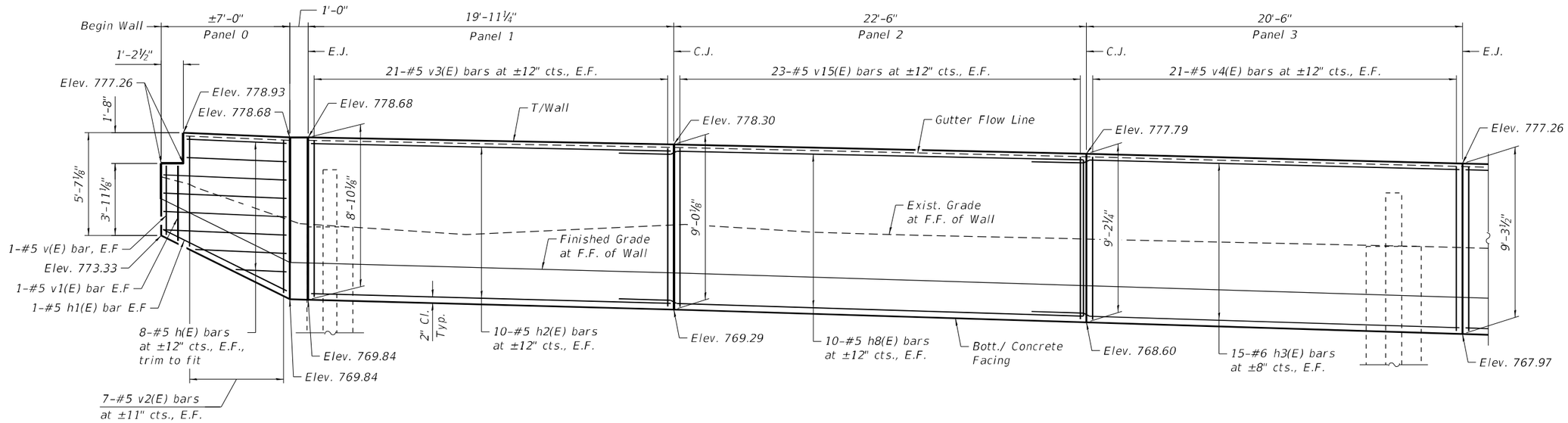

UNFOLDED ELEVATION

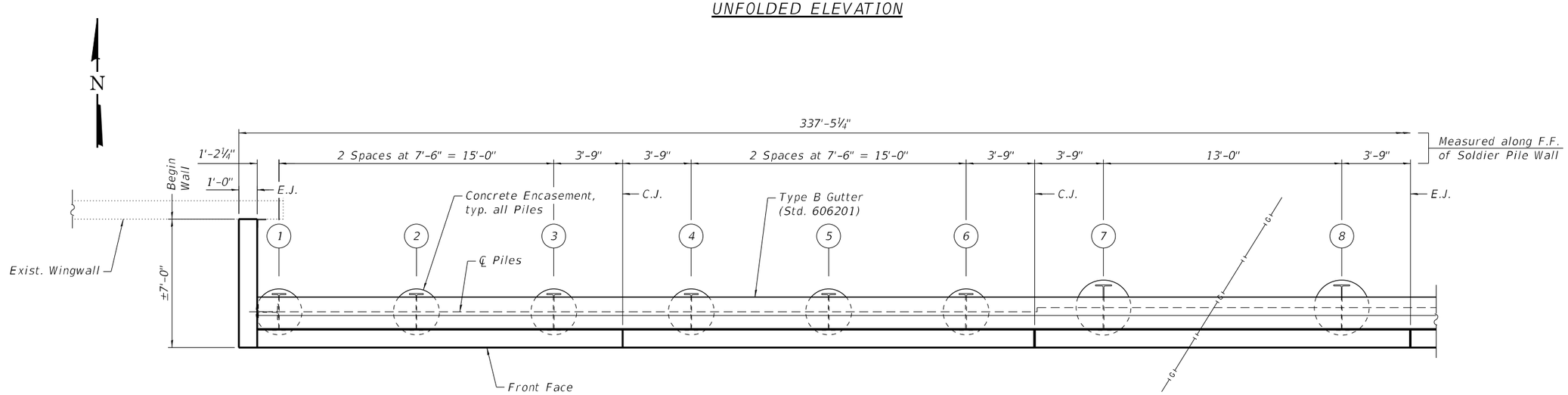

PLAN

LEGEND

—— FO ——	Existing Underground Fiber Optic
—— G ——	Existing Underground Gasline
E.J.	Expansion Joint
C.J.	Construction Joint
F.F.	Front Face
E.F.	Each Face

MINIMUM BAR LAP

#5 bar = 3'-7"
#6 bar = 4'-4"

Notes:

1. Geocomposite wall drain, timber lagging, pipe underdrain & soldier pile encasement not shown for clarity.
2. For typical wall details, see sheet SB-3 of SB-16.
3. For reinforcement bar schedule & Bill of Material, see sheet SB-12 of SB-16.

MODEL: Default
FILE NAME: pw:\\atlas-pw.bentley.com:atlas-pw-01\Documents\Projects\1001\1001 CV 008\003\10 CADD_Sheets\12_Structural\Retaining Wall\099W1000-D160R76-XX-RBA-01.dgn

HDR
9450 W. BRYN MAWR AVE.
ROSEMONT, IL 60018

USER NAME = untitled	DESIGNED - CHP	REVISED -	
	CHECKED - BHS	REVISED -	
PLOT SCALE = 100:0.0000 ':" / in.	DRAWN - JM	REVISED -	
PLOT DATE = 12/20/2024	CHECKED - MBQ	REVISED -	

STATE OF ILLINOIS
DEPARTMENT OF TRANSPORTATION

REINFORCEMENT DETAILS (1 OF 5)
STRUCTURE NO. 099-W1000

SHEET SB-8 OF SB-16 SHEETS

F.A.I. RTE.	SECTION	COUNTY	TOTAL SHEETS	SHEET NO.
57	99-1HB-2-BR	WILL	133	84
		CONTRACT NO. 60R76		
	ILLINOIS	FED. AID PROJECT		

12/20/2024 2:29:28 PM

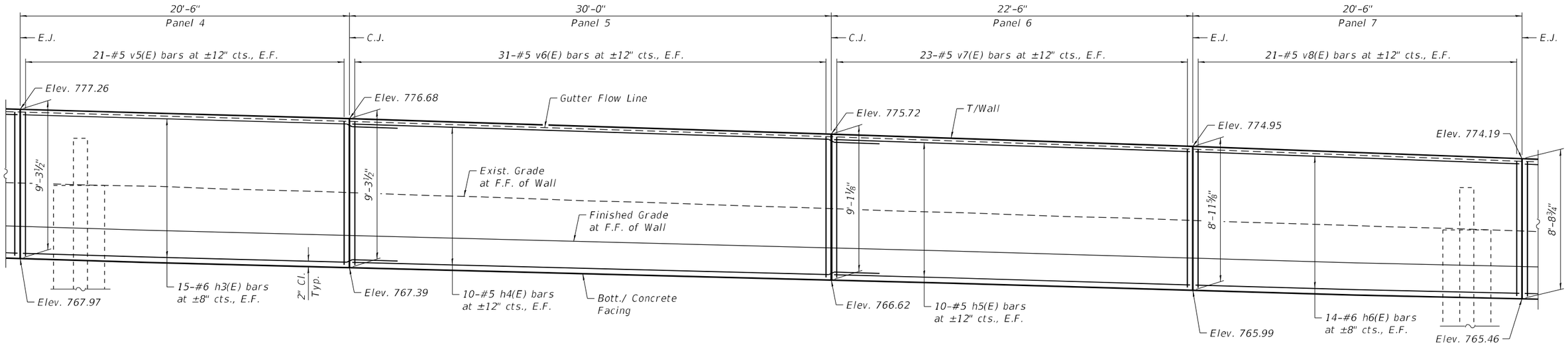

ELEVATION

N

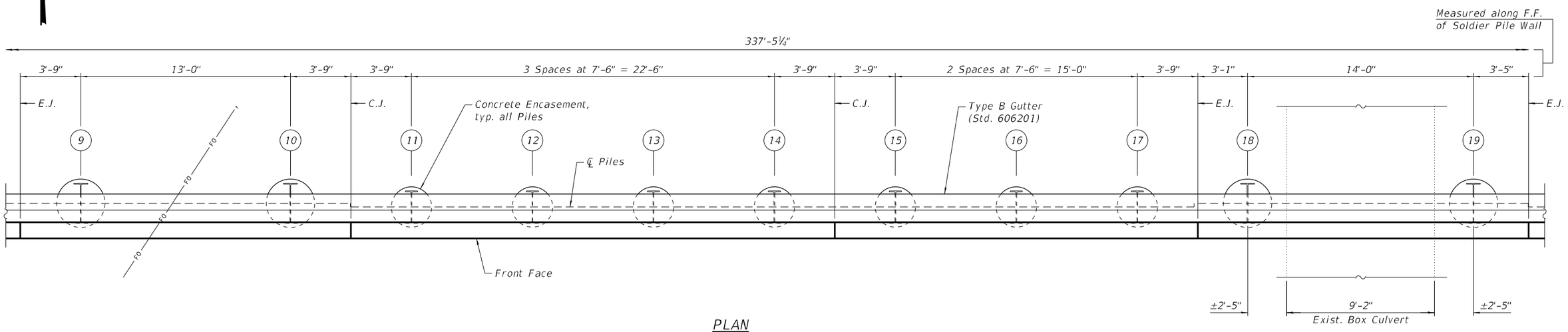

PLAN

LEGEND

—— FO ——	Existing Underground Fiber Optic
—— G ——	Existing Underground Gasline
E.J.	Expansion Joint
C.J.	Construction Joint
F.F.	Front Face
E.F.	Each Face

MINIMUM BAR LAP

#5 bar = 3'-7"
#6 bar = 4'-4"

Notes:

1. Geocomposite wall drain, timber lagging, pipe underdrain & soldier pile encasement not shown for clarity.
2. For typical wall details, see sheet SB-3 of SB-16.
3. For reinforcement bar schedule & Bill of Material, see sheet SB-12 of SB-16.

MODEL: Default
FILE NAME: pw:\\atlas-pw.bentley.com:atlas-pw-01\Documents\Projects\1001\1001 CV 008\003\10 CADD_Sheets\12_Structural\Retaining Wall\099W1000-D160R76-XX-RBA-02.dgn

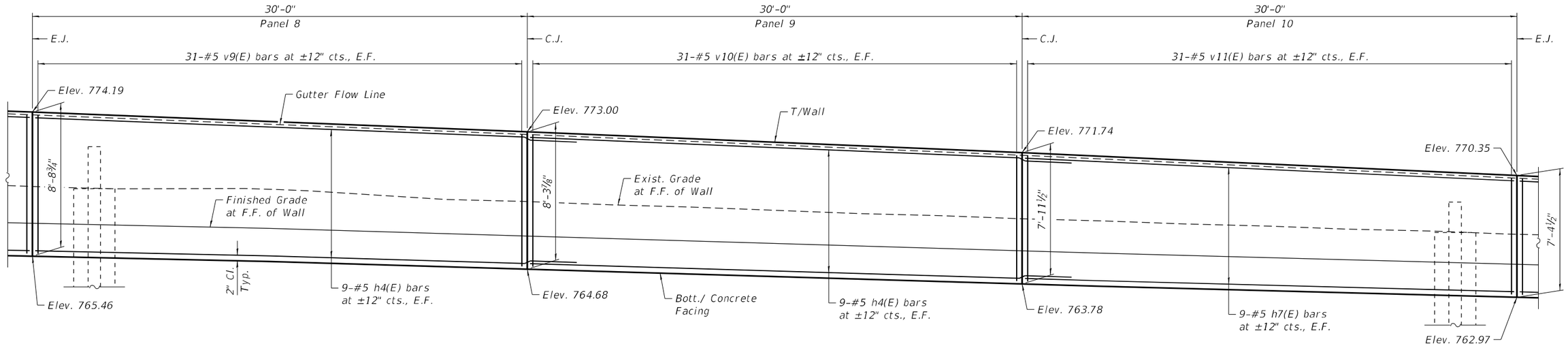

ELEVATION

N

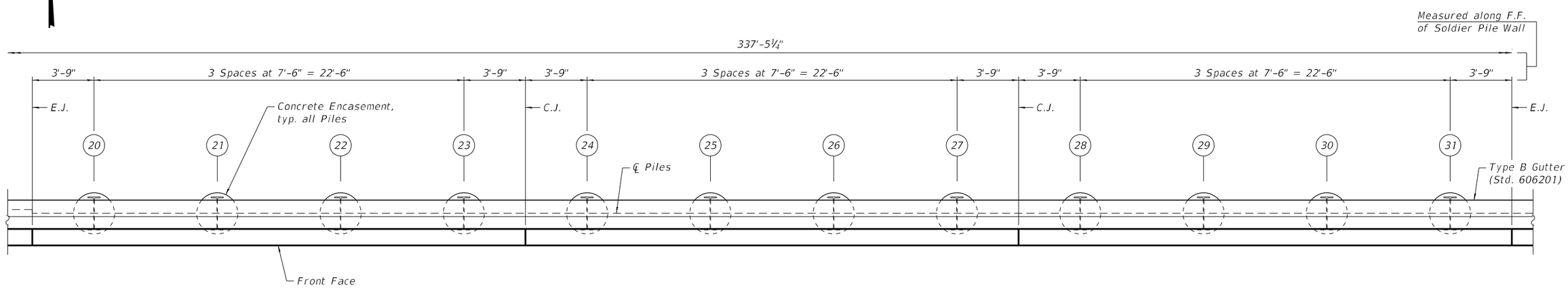

PLAN

LEGEND

—— FO ——	Existing Underground Fiber Optic
—— G ——	Existing Underground Gasline
E.J.	Expansion Joint
C.J.	Construction Joint
F.F.	Front Face
E.F.	Each Face

MINIMUM BAR LAP

#5 bar = 3'-7"
#6 bar = 4'-4"

Notes:

1. Geocomposite wall drain, timber lagging, pipe underdrain & soldier pile encasement not shown for clarity.
2. For typical wall details, see sheet SB-3 of SB-16.
3. For reinforcement bar schedule & Bill of Material, see sheet SB-12 of SB-16.

MODEL: Default
FILE NAME: pw:\\atlas-pw.bentley.com:atlas-pw-01\Documents\Projects\1001\1001 CV 008\003\10 CAD\2_Sheets\12_Structural\Retaining Wall\099W1000-D160R76-XX-RBA-03.dgn

HDR
9450 W. BRYN MAWR AVE.
ROSEMONT, IL 60018

USER NAME = untitled	DESIGNED - CHP	REVISED -	
	CHECKED - BHS	REVISED -	
PLOT SCALE = 100:0.0000 ':' / in.	DRAWN - JM	REVISED -	
PLOT DATE = 12/20/2024	CHECKED - MBQ	REVISED -	

STATE OF ILLINOIS
DEPARTMENT OF TRANSPORTATION

REINFORCEMENT DETAILS (3 OF 5)
STRUCTURE NO. 099-W1000

SHEET SB-10 OF SB-16 SHEETS

F.A.I. RTE.	SECTION	COUNTY	TOTAL SHEETS	SHEET NO.
57	99-1HB-2-BR	WILL	133	86
		CONTRACT NO. 60R76		
	ILLINOIS	FED. AID PROJECT		

12/20/2024 2:30:36 PM

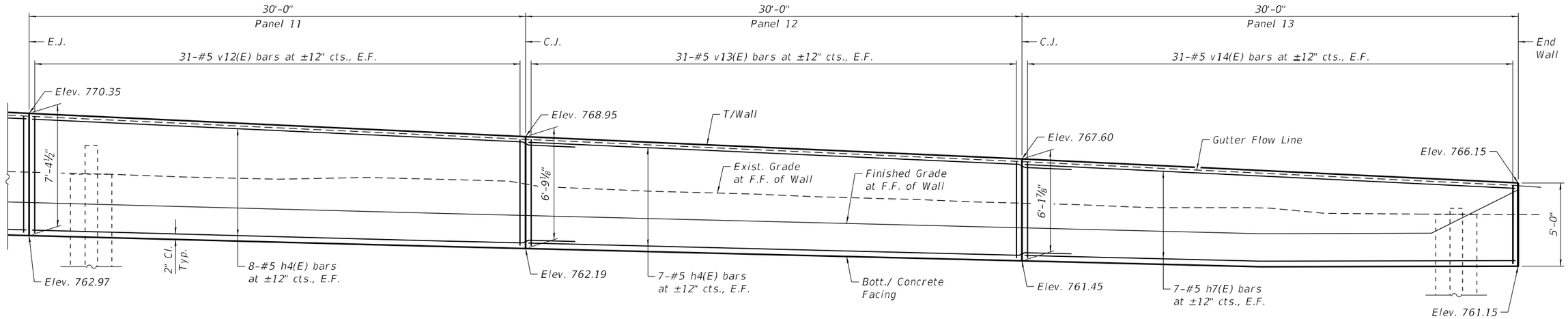

ELEVATION

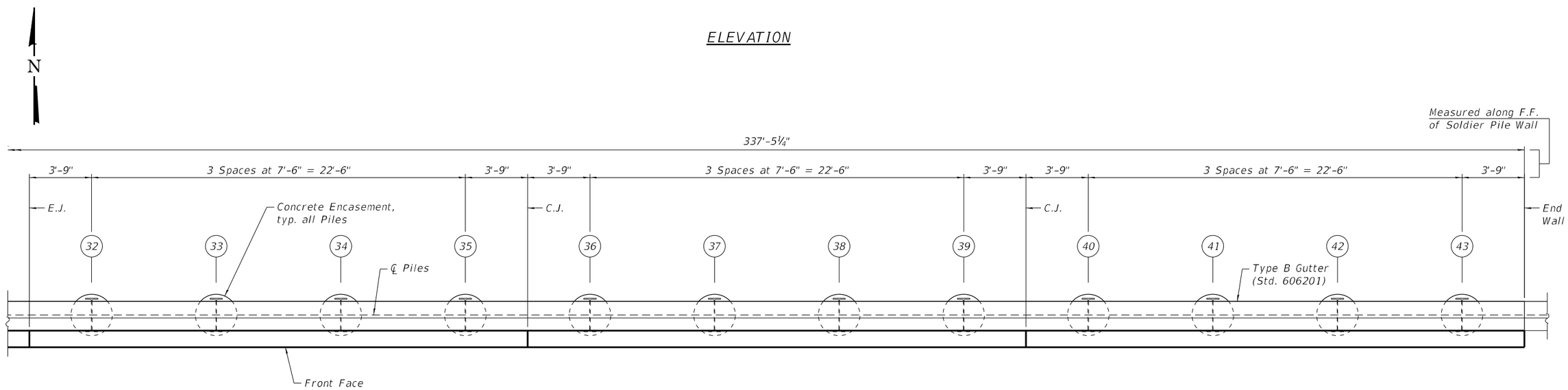

PLAN

LEGEND

—— FO ——	Existing Underground Fiber Optic
—— G ——	Existing Underground Gasline
E.J.	Expansion Joint
C.J.	Construction Joint
F.F.	Front Face
E.F.	Each Face

MINIMUM BAR LAP

#5 bar = 3'-7"
#6 bar = 4'-4"

Notes:

1. Geocomposite wall drain, timber lagging, pipe underdrain & soldier pile encasement not shown for clarity.
2. For typical wall details, see sheet SB-3 of SB-16.
3. For reinforcement bar schedule & Bill of Material, see sheet SB-12 of SB-16.

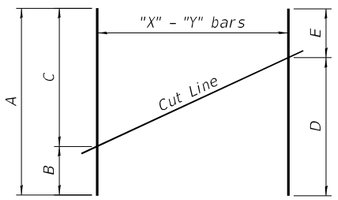

FIELD CUTTING DIAGRAM

Order v2(E) thru v4(E) and v6(E) thru v15(E) bars full length. Cut as shown and use remainder of bars in opposite face of wall facing.

FIELD CUTTING DIAGRAM TABLE

Bars	X	Y	A	B	C	D	E
v2(E)	7	#5	14'-5"	6'-0"	8'-5"	8'-5"	6'-0"
v3(E)	21	#5	17'-2"	8'-6"	8'-8"	8'-8"	8'-6"
v4(E)	21	#5	17'-9"	8'-10"	8'-11"	8'-11"	8'-10"
v6(E)	31	#5	17'-8"	8'-9"	8'-11"	8'-11"	8'-9"
v7(E)	23	#5	17'-4"	8'-7"	8'-9"	8'-9"	8'-7"
v8(E)	21	#5	16'-11"	8'-4"	8'-7"	8'-7"	8'-4"
v9(E)	31	#5	16'-4"	8'-0"	8'-4"	8'-4"	8'-0"
v10(E)	31	#5	15'-7"	7'-7"	8'-0"	8'-0"	7'-7"
v11(E)	31	#5	14'-7"	7'-0"	7'-7"	7'-7"	7'-0"
v12(E)	31	#5	13'-5"	6'-5"	7'-0"	7'-0"	6'-5"
v13(E)	31	#5	12'-3"	5'-10"	6'-5"	6'-5"	5'-10"
v14(E)	31	#5	10'-6"	4'-8"	5'-10"	5'-10"	4'-8"
v15(E)	23	#5	17'-6"	8'-8"	8'-10"	8'-10"	8'-8"

BILL OF MATERIAL

Bar	No.	Size	Length	Shape
h(E)	16	#5	6'-8"	
h1(E)	2	#5	7'-6"	
h2(E)	20	#5	19'-7"	
h3(E)	60	#6	24'-8"	
h4(E)	86	#5	33'-7"	
h5(E)	20	#5	22'-2"	
h6(E)	28	#6	20'-2"	
h7(E)	32	#5	29'-8"	
h8(E)	20	#5	26'-1"	
v(E)	2	#5	3'-7"	
v1(E)	2	#5	4'-1"	
v2(E)	7	#5	14'-5"	
v3(E)	21	#5	17'-2"	
v4(E)	21	#5	17'-9"	
v5(E)	42	#5	8'-11"	
v6(E)	31	#5	17'-8"	
v7(E)	23	#5	17'-4"	
v8(E)	21	#5	16'-11"	
v9(E)	31	#5	16'-4"	
v10(E)	31	#5	15'-7"	
v11(E)	31	#5	14'-7"	
v12(E)	31	#5	13'-5"	
v13(E)	31	#5	12'-3"	
v14(E)	31	#5	10'-6"	
v15(E)	23	#5	17'-6"	
Porous Granular Backfill			Cu Yd	139
Structure Excavation			Cu Yd	165
Concrete Structures			Cu Yd	102.8
Protective Coat			Sq Yd	273
Stud Shear Connectors			Each	597
Reinforcement Bars, Epoxy Coated			Pound	14,350
Furnishing Soldier Piles (W Section)			Foot	1,441
Drilling and Setting Soldier Piles (In Soil)			Cu Ft	6,794
Untreated Timber Lagging			Sq Ft	2,120
Geocomposite Wall Drain			Sq Yd	185
Pipe Underdrain for Structures 4"			Foot	387

Illinois Department of Transportation
Division of Highways
GSG Consultants, Inc.

SOIL BORING LOG

Page 1 of 2
Date 1/24/23

ROUTE Pauling Road DESCRIPTION Retaining Wall Boring LOGGED BY AA

SECTION I-57 at Pauling Road LOCATION , SEC. 31, TWP. 34N, RNG. 13E,
Latitude 41.39771951, Longitude -87.76807648

COUNTY WILL DRILLING RIG CME 75 HAMMER TYPE AUTO
DRILLING METHOD HSA HAMMER EFF (%) 79.8

STRUCT. NO.
Station

BORING NO. RWB-08
Station 111+34.44
Offset 10.88ft RT
Ground Surface Elev. 778.60 ft

Surface Water Elev. N/A ft
Stream Bed Elev. N/A ft

Groundwater Elev.:
First Encounter 735.6 ft ▼
Upon Completion N/A ft
After N/A Hrs. N/A ft

Description	Elev.	DEPTH (ft)	BLOWS (/6")	UCS Qu (tsf)	MOIST (%)
5 inches of Asphalt 4 inches of Aggregate Base	778.18 777.85				
Brown, Moist FILL: SILTY CLAY, with sand, trace gravel			2 3 5	1.0 P	18
	775.10				
Brown, Moist to Very Moist FILL: SILTY CLAY, trace gravel and sand		-5	4 4 6	3.5 P	16
			3 3 4	2.0 P	16
		-10	4 5 7	4.5 P	19
			3 4 6	3.0 P	18
		-15	2 4 5	2.0 P	15
			3 4 5	2.5 P	19
		-20	2 3 5	2.3 P	18
Brown, Moist to Very Moist FILL: SILTY CLAY, trace gravel and sand *(continued)*			2 5 7	3.3 P	27
Wooden fragments at 22 feet					
	755.60				
Very Stiff Dark Brown, Moist SILTY CLAY, trace gravel and sand (CL/ML)		-25	3 7 6	3.5 P	21
	751.60				
Medium Stiff to Very Stiff Brown and Gray, Moist SILTY CLAY, trace gravel (CL/ML)			4 4 6	2.1 B	23
		-30	2 3 3	0.8 P	23
Cobbles at 33.5 feet		-35	4 6 8		15
	740.00				
Very Stiff Gray, Moist SILTY CLAY, trace gravel (CL/ML)	739.10	-40	3 5 7	2.3 B	16

The Unconfined Compressive Strength (UCS) Failure Mode is indicated by (B-Bulge, S-Shear, P-Penetrometer)
The SPT (N value) is the sum of the last two blow values in each sampling zone (AASHTO T206)

BBS, form 137 (Rev. 8-99)

Illinois Department of Transportation
Division of Highways
GSG Consultants, Inc.

SOIL BORING LOG

Page 2 of 2
Date 1/24/23

ROUTE Pauling Road DESCRIPTION Retaining Wall Boring LOGGED BY AA

SECTION I-57 at Pauling Road LOCATION , SEC. 31, TWP. 34N, RNG. 13E,
Latitude 41.39771951, Longitude -87.76807648

COUNTY WILL DRILLING RIG CME 75 HAMMER TYPE AUTO
DRILLING METHOD HSA HAMMER EFF (%) 79.8

STRUCT. NO.
Station

BORING NO. RWB-08
Station 111+34.44
Offset 10.88ft RT
Ground Surface Elev. 778.60 ft

Surface Water Elev. N/A ft
Stream Bed Elev. N/A ft

Groundwater Elev.:
First Encounter 735.6 ft ▼
Upon Completion N/A ft
After N/A Hrs. N/A ft

Description	Elev.	DEPTH (ft)	BLOWS (/6")	UCS Qu (tsf)	MOIST (%)
Medium Dense Gray, Wet SANDY LOAM, trace gravel (SM) *(continued)*					
	735.10				
Very Stiff Gray, Moist SILTY CLAY, trace gravel (CL/ML)	733.60	-45	5 4 8	2.3 B	17
End of Boring					

The Unconfined Compressive Strength (UCS) Failure Mode is indicated by (B-Bulge, S-Shear, P-Penetrometer)
The SPT (N value) is the sum of the last two blow values in each sampling zone (AASHTO T206)

BBS, form 137 (Rev. 8-99)

Illinois Department of Transportation
Division of Highways
GSG Consultants, Inc.

SOIL BORING LOG

Page 1 of 2
Date 1/24/23

ROUTE Pauling Road DESCRIPTION Retaining Wall Boring LOGGED BY AA

SECTION I-57 at Pauling Road LOCATION , SEC. 31, TWP. 34N, RNG. 13E,
Latitude 41.39772206, Longitude -87.76794602

COUNTY WILL DRILLING RIG CME 75 HAMMER TYPE AUTO
DRILLING METHOD HSA HAMMER EFF (%) 79.8

STRUCT. NO.
Station

BORING NO. RWB-09
Station 111+70.24
Offset 10.29ft RT
Ground Surface Elev. 777.43 ft

Surface Water Elev. N/A ft
Stream Bed Elev. N/A ft

Groundwater Elev.:
First Encounter 743.4 ft ▼
Upon Completion N/A ft
After N/A Hrs. N/A ft

Description	Elev.	DEPTH (ft)	BLOWS (/6")	UCS Qu (tsf)	MOIST (%)
5 inches of Asphalt 4 inches of Aggregate Base	777.01 776.68				
Dark Gray, Moist FILL: SILTY CLAY, with sand, trace gravel			3 6 7	4.5 P	18
	773.93				
Brown and Gray, Moist FILL: SILTY CLAY, trace gravel		-5	6 5 7	4.6 B	18
			3 4 6	3.3 P	16
		-10	4 5 6	4.5 P	20
	766.43				
Brown, Moist FILL: SILTY CLAY, trace gravel			3 3 5	4.0 P	17
	763.93				
Brown and Gray, Moist to Very Moist FILL: SILTY CLAY, trace gravel		-15	2 3 5	2.0 P	17
			3 5 7	3.1 B	21
		-20	4 6 8	2.5 B	25
Brown and Gray, Moist to Very Moist FILL. SILTY CLAY, trace gravel *(continued)*			4 37 14		23
Gravel seam at 22 feet					
	753.93				
Hard Dark Gray, Moist SILTY CLAY, trace gravel (CL/ML)		-25	5 8 7	5.2 B	25
	751.43				
Stiff Brown and Gray, Very Moist SILTY CLAY, trace gravel (CL/ML)			3 3 3	1.0 B	29
	748.93				
Medium Stiff Brown, Moist SILTY CLAY, with sand (CL/ML)		-30	2 3 4	0.8 B	19
	743.93				
Stiff to Very Stiff Gray, Moist SILTY CLAY, trace gravel (CL/ML)		-35	4 7 7	1.3 B	13
		-40	4 8 8	2.9 B	17

The Unconfined Compressive Strength (UCS) Failure Mode is indicated by (B-Bulge, S-Shear, P-Penetrometer)
The SPT (N value) is the sum of the last two blow values in each sampling zone (AASHTO T206)

BBS, form 137 (Rev. 8-99)

Note:
For location of Soil Boring, see sheet SB-1 of SB-16.

Illinois Department of Transportation
Division of Highways
GSG Consultants, Inc.

SOIL BORING LOG

Page 2 of 2
Date 1/24/23

ROUTE Pauling Road DESCRIPTION Retaining Wall Boring LOGGED BY AA

SECTION I-57 at Pauling Road LOCATION , SEC. 31, TWP. 34N, RNG. 13E,
Latitude 41.39772206, Longitude -87.76794602

COUNTY WILL DRILLING RIG CME 75 HAMMER TYPE AUTO
DRILLING METHOD HSA HAMMER EFF (%) 79.8

STRUCT. NO.
Station

BORING NO. RWB-09
Station 111+70.24
Offset 10.29ft RT
Ground Surface Elev. 777.43 ft

Surface Water Elev. N/A ft
Stream Bed Elev. N/A ft

Groundwater Elev.:
First Encounter 743.4 ft ▼
Upon Completion N/A ft
After N/A Hrs. N/A ft

Description	Elev.	DEPTH (ft)	BLOWS (/6")	UCS Qu (tsf)	MOIST (%)
Stiff to Very Stiff Gray, Moist SILTY CLAY, trace gravel (CL/ML) *(continued)*					
Cobbles at 43.5 feet			6		
			7 8		18
	732.43	-45			
End of Boring					
		-50			
		-55			
		-60			

The Unconfined Compressive Strength (UCS) Failure Mode is indicated by (B-Bulge, S-Shear, P-Penetrometer)
The SPT (N value) is the sum of the last two blow values in each sampling zone (AASHTO T206)

BBS, form 137 (Rev. 8-99)

Illinois Department of Transportation
Division of Highways
GSG Consultants, Inc.

SOIL BORING LOG

Page 1 of 2
Date 1/24/23

ROUTE Pauling Road DESCRIPTION Retaining Wall Boring LOGGED BY DD

SECTION I-57 at Pauling Road LOCATION , SEC. 31, TWP. 34N, RNG. 13E,
Latitude 41.39772235, Longitude -87.7676167

COUNTY WILL DRILLING RIG Diedrich D50 HAMMER TYPE AUTO
DRILLING METHOD HSA HAMMER EFF (%) 99.5

STRUCT. NO.
Station

BORING NO. RWB-10
Station 112+60.60
Offset 11.05ft RT
Ground Surface Elev. 775.34 ft

Surface Water Elev. N/A ft
Stream Bed Elev. N/A ft

Groundwater Elev.:
First Encounter 746.8 ft ▼
Upon Completion N/A ft
After N/A Hrs. N/A ft

Description	Elev.	DEPTH (ft)	BLOWS (/6")	UCS Qu (tsf)	MOIST (%)
9 inches of Asphalt 8 inches of Aggregate Base	774.59				
	773.92		4		
Brown and Gray, Moist to Very Moist FILL: SILTY CLAY, trace gravel			5 5	3.8 B	17
			4		
		-5	5 4	3.3 B	17
			3 4 4	2.9 B	16
			3		
		-10	5 3	1.7 B	16
			4		
			3 6	2.7 B	25
			3		
		-15	3 6	4.2 B	16
			4		
			7 11	6.5 B	12
			4		
		-20	5 8	1.3 B	24
	754.34				
Stiff Brown and Gray, Moist to Very Moist SILTY CLAY, with sand, trace gravel (CL/ML)			2		
			4 4	1.5 B	21
			3		
		-25	3 4	1.5 B	27
	749.34				
Medium Dense Brown, Wet SANDY LOAM, trace gravel (SM)			5 7 7		20
	748.84 ▼				
Very Stiff Gray, Moist SILTY CLAY, (CL/ML)			4		
			7 9	3.8 B	14
		-30			
	741.84				
Stiff to Very Stiff Gray, Moist SILTY CLAY LOAM, trace gravel (CL/ML)			5		
			7 11	2.1 B	16
		-35			
			4		
		-40	5 6	1.9 B	16

The Unconfined Compressive Strength (UCS) Failure Mode is indicated by (B-Bulge, S-Shear, P-Penetrometer)
The SPT (N value) is the sum of the last two blow values in each sampling zone (AASHTO T206)

BBS, form 137 (Rev. 8-99)

Illinois Department of Transportation
Division of Highways
GSG Consultants, Inc.

SOIL BORING LOG

Page 2 of 2
Date 1/24/23

ROUTE Pauling Road DESCRIPTION Retaining Wall Boring LOGGED BY DD

SECTION I-57 at Pauling Road LOCATION , SEC. 31, TWP. 34N, RNG. 13E,
Latitude 41.39772235, Longitude -87.7676167

COUNTY WILL DRILLING RIG Diedrich D50 HAMMER TYPE AUTO
DRILLING METHOD HSA HAMMER EFF (%) 99.5

STRUCT. NO.
Station

BORING NO. RWB-10
Station 112+60.60
Offset 11.05ft RT
Ground Surface Elev. 775.34 ft

Surface Water Elev. N/A ft
Stream Bed Elev. N/A ft

Groundwater Elev.:
First Encounter 746.8 ft ▼
Upon Completion N/A ft
After N/A Hrs. N/A ft

Description	Elev.	DEPTH (ft)	BLOWS (/6")	UCS Qu (tsf)	MOIST (%)
Stiff to Very Stiff Gray, Moist SILTY CLAY LOAM, trace gravel (CL/ML) *(continued)*					
			4		
			4 7	1.7 B	19
	730.34	-45			
End of Boring					
		-50			
		-55			
		-60			

The Unconfined Compressive Strength (UCS) Failure Mode is indicated by (B-Bulge, S-Shear, P-Penetrometer)
The SPT (N value) is the sum of the last two blow values in each sampling zone (AASHTO T206)

BBS, form 137 (Rev. 8-99)

Note:
For location of Soil Boring, see sheet SB-1 of SB-16.

MODEL: Default
FILE NAME: pw:\\atlas-pw.bentley.com:atlas-pw-01\Documents\Projects\10011\1001 CV 008\003\10 CAD\3_Sheets\12_Structural\Retaining Wall\099W1000-D160R76-XX-BORLOG-02.dgn

HDR
9450 W. BRYN MAWR AVE.
ROSEMONT, IL 60018

USER NAME untitled	DESIGNED - CHP	REVISED -	
	CHECKED - BHS	REVISED -	
PLOT SCALE 100:0.0000 ':" / in.	DRAWN - JM	REVISED -	
PLOT DATE 12/20/2024	CHECKED - MBQ	REVISED -	

STATE OF ILLINOIS
DEPARTMENT OF TRANSPORTATION

SOIL BORING LOGS (2 OF 4)
STRUCTURE NO. 099-W1000

SHEET SB-14 OF SB-16 SHEETS

F.A.I. RTE.	SECTION	COUNTY	TOTAL SHEETS	SHEET NO.
57	99-1HB-2-BR	WILL	133	90
		CONTRACT NO. 60R76		
		ILLINOIS FED. AID PROJECT		

12/20/2024 2:32:47 PM

Illinois Department of Transportation
Division of Highways
GSG Consultants, Inc.

SOIL BORING LOG

Page 1 of 1
Date 1/24/23

ROUTE Pauling Road DESCRIPTION Retaining Wall Boring LOGGED BY DD

SECTION I-57 at Pauling Road LOCATION SEC. 31, TWP. 34N, RNG. 13E,
Latitude 41.39772422, Longitude -87.76738228

COUNTY WILL DRILLING RIG Diedrich D50 HAMMER TYPE AUTO
DRILLING METHOD HSA HAMMER EFF (%) 99.5

STRUCT. NO.
Station

BORING NO. RWB-11
Station 113+24.92
Offset 10.98ft RT
Ground Surface Elev. 772.81 ft

Surface Water Elev. N/A ft
Stream Bed Elev. N/A ft

Groundwater Elev.:
First Encounter 746.8 ft ▼
Upon Completion N/A ft
After N/A Hrs. N/A ft

Description	Elev.	Depth (ft)	Blows (/6")	UCS Qu (tsf)	Moist (%)
9.5 inches of Asphalt					
8 inches of Aggregate Base	772.06				
	771.39		6		
Brown and Gray, Moist FILL: SILTY CLAY, trace gravel and sand			5	5.0	16
			7	B	
			4		
			4	2.5	18
		-5	7	B	
			3		
			3	1.5	12
			6	B	
			3		
			4	2.7	14
		-10	6	B	
			3		
			5	2.9	22
			5	B	
			4		
			4	2.1	15
		-15	0	B	
			9		
			11	5.6	19
			9	B	
	754.31				
			3		
		-20	5	2.9	26
			6	B	
Stiff to Very Stiff Brown and Gray, Moist to Very Moist SILTY CLAY, with sand, trace gravel (CL/ML) *(continued)*			4		
			3	1.3	24
			5	B	
	749.81				
Loose Brown, Very Moist LOAM (ML-SP)			1		
	748.31		3		20
Loose to Medium Dense Gray, Moist to Very Moist LOAM (ML-SP)		-25	5		
			11		
			7		15
			4		
	743.81		4		
Stiff to Very Stiff Gray, Moist SILTY CLAY, trace sand (CL/ML)			6	1.5	13
		-30	8	B	
			4		
			6	2.1	17
	737.81	-35	9	B	
End of Boring					

The Unconfined Compressive Strength (UCS) Failure Mode is indicated by (B-Bulge, S-Shear, P-Penetrometer)
The SPT (N value) is the sum of the last two blow values in each sampling zone (AASHTO T206)

BBS, form 137 (Rev. 8-99)

Illinois Department of Transportation
Division of Highways
GSG Consultants, Inc.

SOIL BORING LOG

Page 1 of 1
Date 1/24/23

ROUTE Pauling Road DESCRIPTION Retaining Wall Boring LOGGED BY DD

SECTION I-57 at Pauling Road LOCATION SEC. 31, TWP. 34N, RNG. 13E,
Latitude 41.3977271, Longitude -87.76698096

COUNTY WILL DRILLING RIG Diedrich D50 HAMMER TYPE AUTO
DRILLING METHOD HSA HAMMER EFF (%) 99.5

STRUCT. NO.
Station

BORING NO. RWB-13
Station 114+35.03
Offset 10.99ft RT
Ground Surface Elev. 768.12 ft

Surface Water Elev. N/A ft
Stream Bed Elev. N/A ft

Groundwater Elev.:
First Encounter None ft
Upon Completion N/A ft
After N/A Hrs. N/A ft

Description	Elev.	Depth (ft)	Blows (/6")	UCS Qu (tsf)	Moist (%)
9 inches of Asphalt					
8 inches of Aggregate Base	767.37				
	766.70		5		
Brown and Gray, Moist FILL: SILTY CLAY, trace gravel and sand			7	4.5	16
			8	P	
			3		
			5	1.7	17
		-5	6	B	
			3		
			4	2.3	18
			5	B	
			3		
			6	3.3	15
		-10	6	B	
	757.12		5		
Stiff to Very Stiff Dark Brown and Gray, Moist to Very Moist CLAY, trace sand (CL)			5	2.0	18
			7	P	
			2		
			5	1.3	26
		-15	6	B	
	752.12		3		
Medium Dense Brown, Moist SILTY LOAM (ML)			6		20
			6		
	749.62				
			4		
		-20	7	4.2	16
			7	B	
Hard Brown and Gray, Moist SILTY CLAY, trace gravel (CL/ML) *(continued)*	747.12		5		
Very Stiff Gray, Moist SILTY CLAY LOAM (CL/ML)			5	3.5	15
			6	P	
			4		
			4	2.5	15
	743.12	-25	7	B	
End of Boring					

The Unconfined Compressive Strength (UCS) Failure Mode is indicated by (B-Bulge, S-Shear, P-Penetrometer)
The SPT (N value) is the sum of the last two blow values in each sampling zone (AASHTO T206)

BBS, form 137 (Rev. 8-99)

Illinois Department of Transportation
Division of Highways
GSG Consultants, Inc.

SOIL BORING LOG

Page 1 of 1
Date 1/24/23

ROUTE Pauling Road DESCRIPTION Retaining Wall Boring LOGGED BY AA

SECTION I-57 at Pauling Road LOCATION SEC. 31, TWP. 34N, RNG. 13E,
Latitude 41.39772879, Longitude -87.76680822

COUNTY WILL DRILLING RIG CME 75 HAMMER TYPE AUTO
DRILLING METHOD HSA HAMMER EFF (%) 79.8

STRUCT. NO.
Station

BORING NO. RWB-14
Station 114+82.43
Offset 10.83ft RT
Ground Surface Elev. 765.83 ft

Surface Water Elev. N/A ft
Stream Bed Elev. N/A ft

Groundwater Elev.:
First Encounter None ft
Upon Completion N/A ft
After N/A Hrs. N/A ft

Description	Elev.	Depth (ft)	Blows (/6")	UCS Qu (tsf)	Moist (%)
9 inches of Asphalt					
4 inches of Aggregate Base	765.08				
	764.75		5		
Brown and Gray, Moist FILL: SILTY CLAY, trace gravel			6	4.5	17
			8	P	
			4		
			5	3.5	21
		-5	7	B	
			3		
			6	4.2	16
			9	B	
	757.33				
Hard Dark Brown, Moist SILTY CLAY LOAM (CL/ML)			9		
			10	4.5	11
		-10	8	P	
	754.83		4		
Medium Stiff to Very Stiff Brown, Moist SILTY CLAY LOAM, trace sand (CL/ML)			4	2.0	23
			5	P	
			3		
			3	0.6	24
		-15	4	B	
	749.83				
Stiff to Very Stiff Gray, Moist SILTY CLAY, trace gravel (CL/ML)			3		
			5	2.0	13
			6	P	
			4		
			5	2.1	13
		-20	7	B	
Stiff to Very Stiff Gray, Moist SILTY CLAY, trace gravel (CL/ML) *(continued)*			4		
			6	2.1	13
			7	B	
			4		
			7	3.1	14
	740.83	-25	11	B	
End of Boring					

The Unconfined Compressive Strength (UCS) Failure Mode is indicated by (B-Bulge, S-Shear, P-Penetrometer)
The SPT (N value) is the sum of the last two blow values in each sampling zone (AASHTO T206)

BBS, form 137 (Rev. 8-99)

Note:
For location of Soil Boring, see sheet SB-1 of SB-16.

MODEL: Default
FILE NAME: pw:\\atlas-pw.bentley.com:atlas-pw-01\Documents\Projects\100111001 CV 008\003110 CAD\3_Sheets\12_Structural\Retaining Wall\099W1000-D160R76-XX-BORLOG-03.dgn

HDR
9450 W. BRYN MAWR AVE.
ROSEMONT, IL 60018

USER NAME = untitled	DESIGNED - CHP	REVISED -	
	CHECKED - BHS	REVISED -	
PLOT SCALE = 100:0.0000 ':" / in.	DRAWN - JM	REVISED -	
PLOT DATE = 12/20/2024	CHECKED - MBQ	REVISED -	

STATE OF ILLINOIS
DEPARTMENT OF TRANSPORTATION

SOIL BORING LOGS (3 OF 4)
STRUCTURE NO. 099-W1000

SHEET SB-15 OF SB-16 SHEETS

F.A.I. RTE.	SECTION	COUNTY	TOTAL SHEETS	SHEET NO.
57	99-1HB-2-BR	WILL	133	91
		CONTRACT NO. 60R76		
		ILLINOIS FED. AID PROJECT		

12/20/2024 2:33:20 PM

Illinois Department of Transportation
Division of Highways
GSG Consultants, Inc.

SOIL BORING LOG

Date 10/4/22

ROUTE Pauling Road DESCRIPTION Retaining Wall Boring LOGGED BY AA

SECTION I-57 at Pauling Road LOCATION SEC. 31, TWP. 34N, RNG. 13E,
Latitude 41.39773445, Longitude -87.76715643

COUNTY WILL DRILLING RIG D50 ATV HAMMER TYPE AUTO
DRILLING METHOD HSA HAMMER EFF (%) 91.5

STRUCT. NO.
Station

BORING NO. SGB-05
Station 113+86.92
Offset 7.85ft RT
Ground Surface Elev. 770.28 ft

Surface Water Elev. N/A ft
Stream Bed Elev. N/A ft

Groundwater Elev.:
First Encounter None ft
Upon Completion N/A ft
After N/A Hrs. N/A ft

Description	Elev.	DEPTH (ft)	BLOWS (/6")	UCS Qu (tsf)	MOIST (%)
9 inches of Asphalt 3 inches of Aggregate Base	769.53 769.28				
Dark Brown and Dark Gray, Moist FILL: SILTY CLAY, trace gravel, sand			4 5 7	4.0 P	19
Dark Brown and Gray, Moist FILL: SILTY CLAY, trace gravel, sand	766.78	-5	3 5 5	3.1 B	19
			3 3 5	3.5 P	25
		-10	2 4 5	2.9 B	19
Brown and Gray, Moist FILL: SILTY CLAY, trace gravel, sand	759.28		3 4 5	4.0 B	14
Dark Brown, Moist FILL: SILTY CLAY, trace gravel, sand	756.28	-15	3 9 10	4.1 B	16
Very Stiff to Hard Dark Brown, Moist SILTY CLAY, trace gravel, sand (CL/ML)	754.28		2 4 5	2.5 P	33
		-20	3 7 10	4.6 B	18
Stiff to Very Stiff Brown and Gray, Moist SILTY CLAY, trace gravel, sand (CL/ML) Cobbles at 21.5 feet	749.28		5 7 9	2.5 P	17
		-25	3 4 6	1.0 B	15
Dense Gray, Moist SANDY LOAM, with gravel (SM)	744.28		5 21 10		12
Stiff to Very Stiff Gray, Moist SILTY CLAY, trace gravel, sand (CL/ML) Cobbles at 28.5 feet	741.78	-30	5 6 8	1.3 P	11
		-35	4 5 6	2.1 B	14
	730.28	-40	4 5 6	1.7 B	16

End of Boring

The Unconfined Compressive Strength (UCS) Failure Mode is indicated by (B-Bulge, S-Shear, P-Penetrometer)
The SPT (N value) is the sum of the last two blow values in each sampling zone (AASHTO T206)

BBS, form 137 (Rev. 8-99)

Note:
For location of Soil Boring, see sheet SB-1 of SB-16.

MODEL: Default
FILE NAME: pw:\\atlas-pw.bentley.com:atlas-pw-01\Documents\Projects\100111001 CV 008\003\10 CAD\3_Sheets\12_Structural\Retaining Wall\099W1000-D160R76-XX-BORLOG-04.dgn

HDR
9450 W. BRYN MAWR AVE.
ROSEMONT, IL 60018

USER NAME untitled	DESIGNED - CHP	REVISED -	
	CHECKED - BHS	REVISED -	
PLOT SCALE 100:0.0000 ':" / in.	DRAWN - JM	REVISED -	
PLOT DATE 12/20/2024	CHECKED - MBQ	REVISED -	

STATE OF ILLINOIS
DEPARTMENT OF TRANSPORTATION

SOIL BORING LOGS (4 OF 4)
STRUCTURE NO. 099-W1000

SHEET SB-16 OF SB-16 SHEETS

F.A.I. RTE.	SECTION	COUNTY	TOTAL SHEETS	SHEET NO.
57	99-1HB-2-BR	WILL	133	92
		CONTRACT NO. 60R76		
		ILLINOIS FED. AID PROJECT		

12/20/2024 2:33:52 PM

B.M.: Mag Nail Set Sta. 108+06.59 Offset 12.64' LT Elev. 776.90

Existing Structure: No Structure Number. Constructed in 1967 under Section 99-1HB-2. The structure consists of a single box culvert 101'-7" long with zero skew. The barrel is 8'-0" wide by 5'-0" high. Wingwalls are flared.

No Salvage

SCOPE OF WORK

1. Partially remove existing NE and NW wingwalls.
2. Construct 22'-4" culvert extension on north end.

DESIGN STRESSES

FIELD UNITS (EXISTING)	FIELD UNITS (NEW CONST.)
f'c = 3,500 psi	f'c = 3,500 psi
fy = 40,000 psi (Reinforcement)	fy = 60,000 psi (Reinforcement)

DESIGN SPECIFICATIONS

2002 AASHTO LFD Bridge Design Specifications, 17th Edition

LOADING HS-20

No future wearing surface.

INDEX OF SHEETS

SC-1. General Plan & Elevation
SC-2. General Data
SC-3. Culvert Details
SC-4. Culvert Details
SC-5. Boring Log
SC-6. Reference: 1960 Culvert Plans

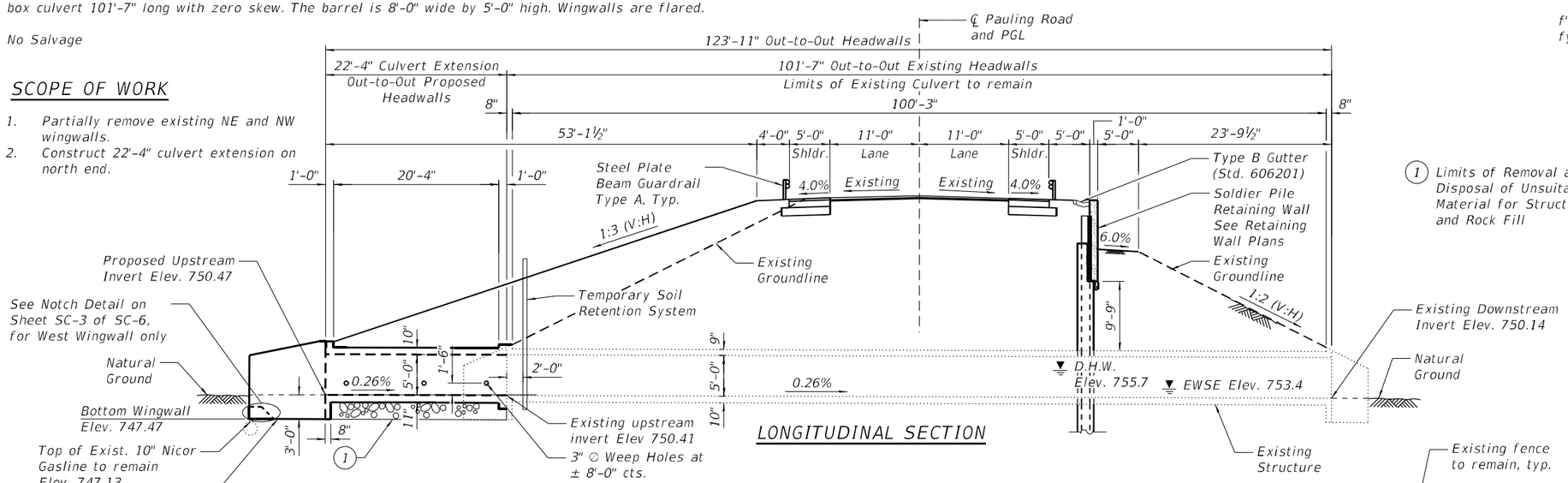

LONGITUDINAL SECTION

1 Limits of Removal and Disposal of Unsuitable Material for Structures and Rock Fill

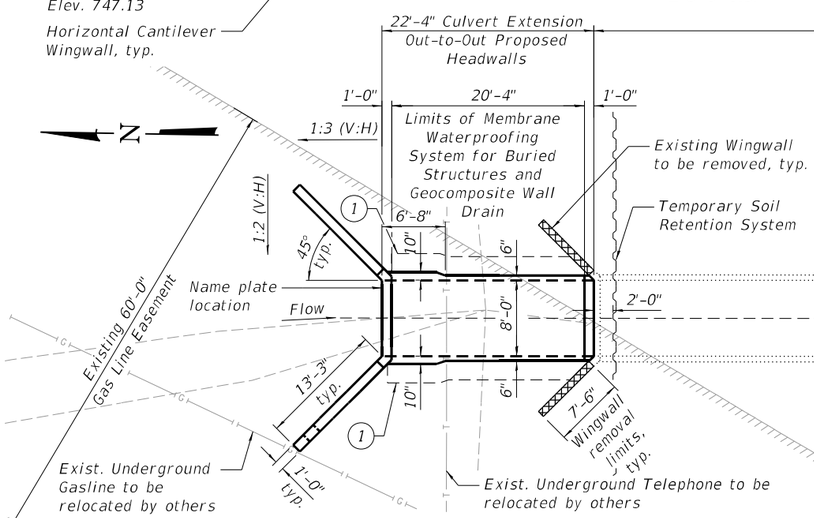

WATERWAY INFORMATION TABLE

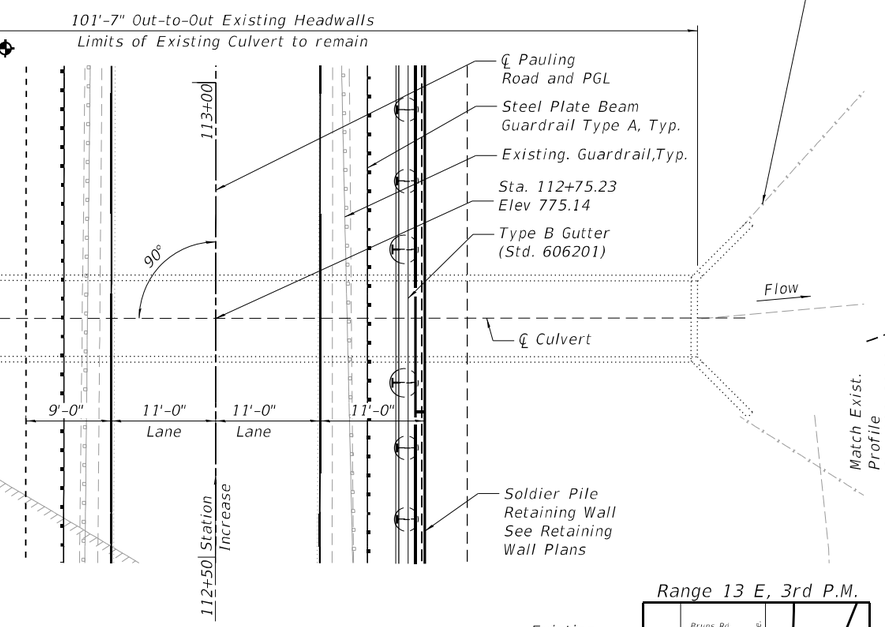

PLAN

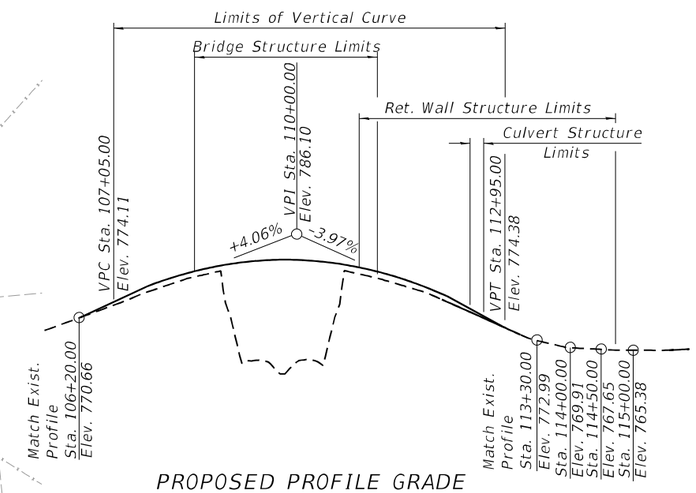

PROPOSED PROFILE GRADE

(Along ℄ Pauling Road)

Drainage Area = 0.53 square miles
Existing Overtopping Elev. = 762.07 @ Sta. 117+50
Proposed Overtopping Elev. = 762.07 @ Sta. 117+50

Flood Event	Freq. Yr.	Discharge ft3/s	Waterway Opening - ft2		Natural H.W.E. - ft	Head - ft		Headwater Elevation - ft	
			Existing	Proposed		Existing	Proposed	Existing	Proposed
	10	139	34.3	33.9	754.7	0.2	0.2	754.9	754.9
Design	50	240	42.3	41.9	755.7	0.7	0.8	756.4	756.5
Base	100	292	45.5	45.1	756.1	1.2	1.3	757.3	757.4
Scour Design Check	5								
Overtop Existing	>500	520.1							
Overtop Proposed	>500	512.1							
Max. Calc.	500	435	53.5	53.1	757.1	3.0	3.1	760.1	760.2

10-Year Velocity through Existing Structure = 4 ft/s
10-Year Velocity through Proposed Structure = 4 ft/s
2-Yr. Flow Rate = 58 cu. ft./s

EAMON HOMEDI 081-009103 LICENSED STRUCTURAL ENGINEER STATE OF ILLINOIS

EAMON HOMEDI, P.E., S.E.
DATE: 03/06/2025
NO. 081-009103
EXP. DATE 11/30/2026

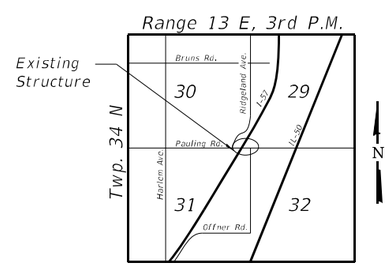

LOCATION SKETCH

GENERAL PLAN AND ELEVATION
I-57 AT PAULING ROAD
F.A.I. RTE. 57
SEC. 99-1HB-2-BR
WILL COUNTY
STATION 112+75.23
NO STRUCTURE NUMBER

MODEL: Default
FILE NAME: pw:\\atlas-pw.bentley.com:atlas-pw01\Documents\Projects\1001\1001 CV 008\003\10 CAD\3_Sheets\12_Structural\Single Box Culvert\D160R76-SingleBox_001-GPE.dgn

ATLAS ENGINEERING GROUP, LTD.	USER NAME =	DESIGNED - NKA	REVISED -
		CHECKED - JKL	REVISED -
	PLOT SCALE =	DRAWN - KB	REVISED -
	PLOT DATE =	CHECKED - 3/3/2025	REVISED -

STATE OF ILLINOIS
DEPARTMENT OF TRANSPORTATION

GENERAL PLAN & ELEVATION
PAULING ROAD CULVERT

SHEET SC-1 OF SC-6 SHEETS

F.A.I. RTE.	SECTION	COUNTY	TOTAL SHEETS	SHEET NO.
57	99-1HB-2-BR	WILL	133	93
		CONTRACT NO. 60R76		
		ILLINOIS	FED. AID PROJECT	

3/7/2025 11:59:49 AM

STA. 112+75.23
BUILT 20__ BY
STATE OF ILLINOIS
F.A.I. RTE. 57 SEC. 99-1HB-2-BR
LOADING HS20
STR. NO. _____

NAME PLATE

See Std. 515001

GENERAL NOTES

Plan dimensions and details relative to the existing structure have been taken from the existing plans and are subject to nominal construction variations. The Contractor shall field verify existing dimensions and details affecting new construction and make necessary approved adjustments prior to construction or ordering of materials. Such variations shall not be cause for additional compensation for a change of scope of the work, however, the Contractor will be paid for the quantity actually furnished at the unit price bid for the work.

Reinforcement bars designated (E) shall be epoxy coated.

The Contractor shall submit a temporary soil retention system design including plan details and calculations for review and acceptance by the Engineer.

The limits and quantities of removal and replacement shown are based on the boring data and may be modified by the District Geotechnical and Field Engineers for variable subsurface conditions encountered in the field.

The Rock Fill shall be capped with 6 in. of CA7 and satisfy the Standard Specifications unless otherwise indicated in the Special Provisions. The cost of the capping material shall be included in the pay item Rock Fill.

All excavation and backfill shall be included in Concrete Box Culverts.

Hand excavation shall be used near 10" Nicor gasline.

TOTAL BILL OF MATERIAL

ITEM	UNIT	TOTAL
Concrete Removal	Cu. Yd.	2.5
Removal and Disposal of Unsuitable Materials for Structures	Cu. Yd.	23
Reinforcement Bars, Epoxy Coated	Pound	5,070
Name Plates	Each	1
Temporary Soil Retention System	Sq. Ft.	375
Expansion Bolts ¾ Inch	Each	16
Concrete Box Culverts	Cu. Yd.	27.6
Geocomposite Wall Drain	Sq. Yd.	31
Membrane Waterproofing System for Buried Structures	Sq. Yd.	31
Rock Fill	Cu. Yd.	23

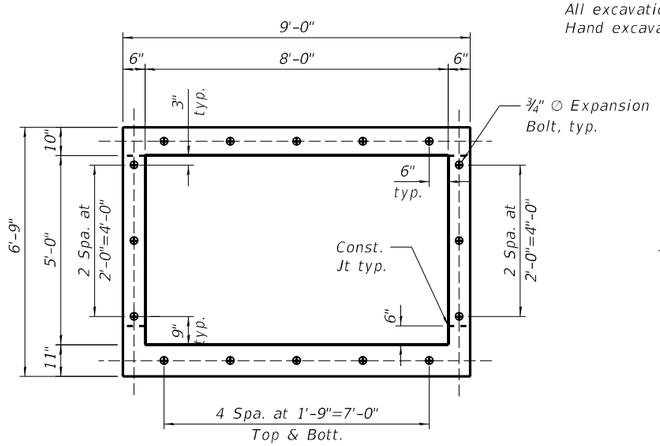

ELEVATION - EXPANSION BOLT DETAIL

Note: Expansion Bolts shall be ¾" ∅ hooked bolts. Hooked bolts shall extend a minimum of 9" into new concrete.

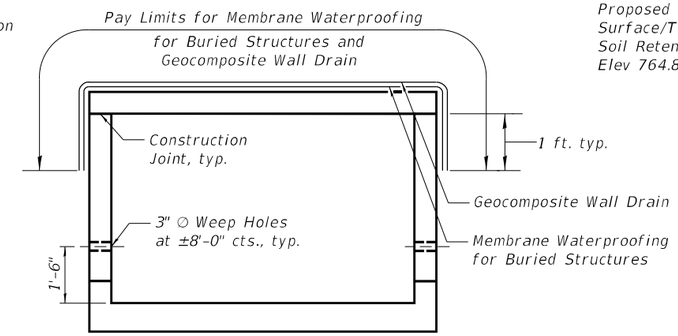

ELEVATION - WATERPROOFING DETAIL

(Geocomposite Wall Drain shall be according to Section 591 of the Standard Specifications, except that concrete nails shall not be used in areas where it overlaps Membrane Waterproofing System for Buried Structures.)

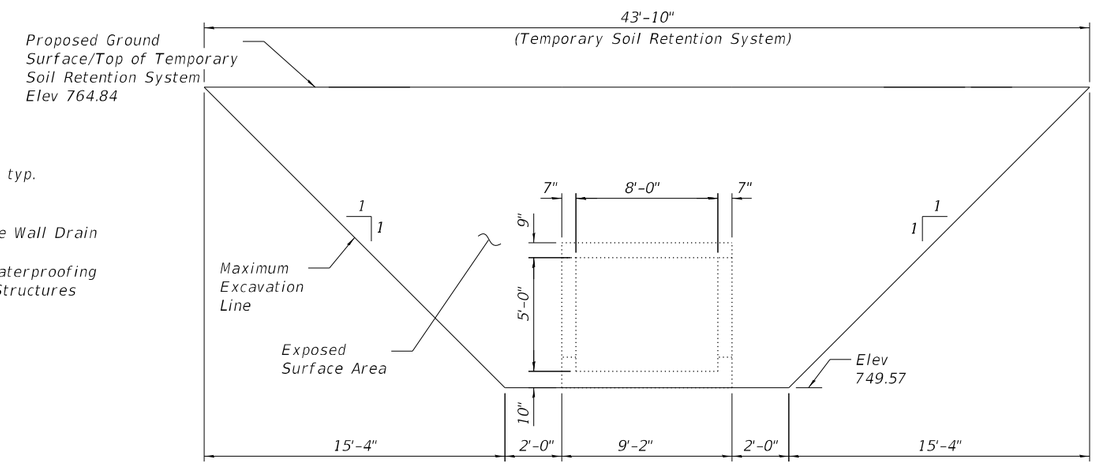

ELEVATION - TEMPORARY SOIL RETENTION SYSTEM

* Nonwoven geotextile fabric shall conform to the requirements of Article 1080.01 of the Standard Specifications. The minimum weight of the fabric shall be 6 ounces per square yard.

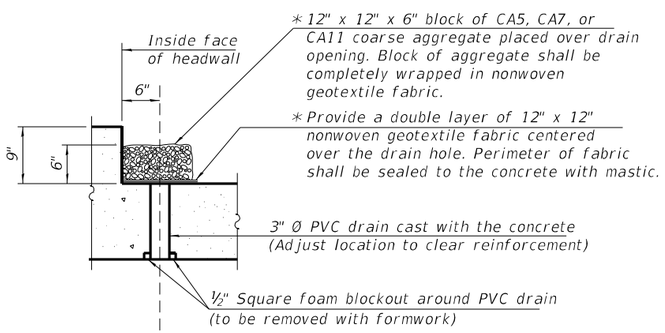

DRAIN DETAIL

(All costs associated with furnishing and constructing the above drain detail will not be measured for payment but shall be included in the contract unit price for the associated work.)

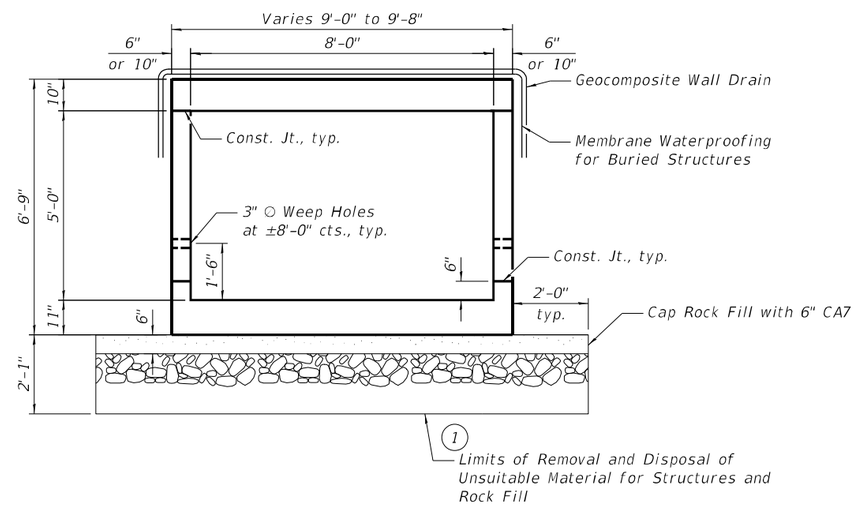

SECTION THRU BARREL

(Looking South)

MODEL: Default
FILE NAME: pw:\\atlas-pw.bentley.com:atlas-pw-01\Documents\Projects\100111001 CV 008\003\10 CAD\3_Sheets\12_Structural\Single Box Culvert\D160R76-SingleBox_002-General.dgn
3/7/2025 11:59:57 AM

AEG ATLAS ENGINEERING GROUP, LTD.	USER NAME =	DESIGNED - NKA	REVISED -	STATE OF ILLINOIS DEPARTMENT OF TRANSPORTATION	GENERAL DATA PAULING ROAD CULVERT
		CHECKED - JKL	REVISED -		
	PLOT SCALE =	DRAWN - KB	REVISED -		
	PLOT DATE =	CHECKED - 4/19/2024	REVISED -		SHEET SC-2 OF SC-6 SHEETS

F.A.I. RTE.	SECTION	COUNTY	TOTAL SHEETS	SHEET NO.
57	99-1HB-2-BR	WILL	133	94
		CONTRACT NO. 60R76		
		ILLINOIS	FED. AID PROJECT	

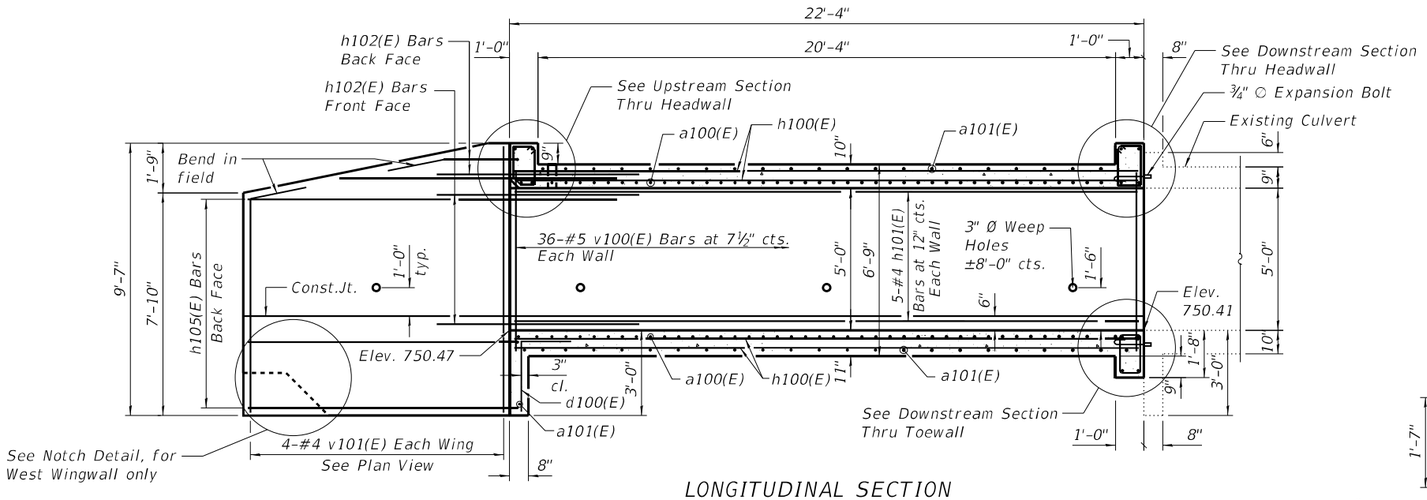

LONGITUDINAL SECTION

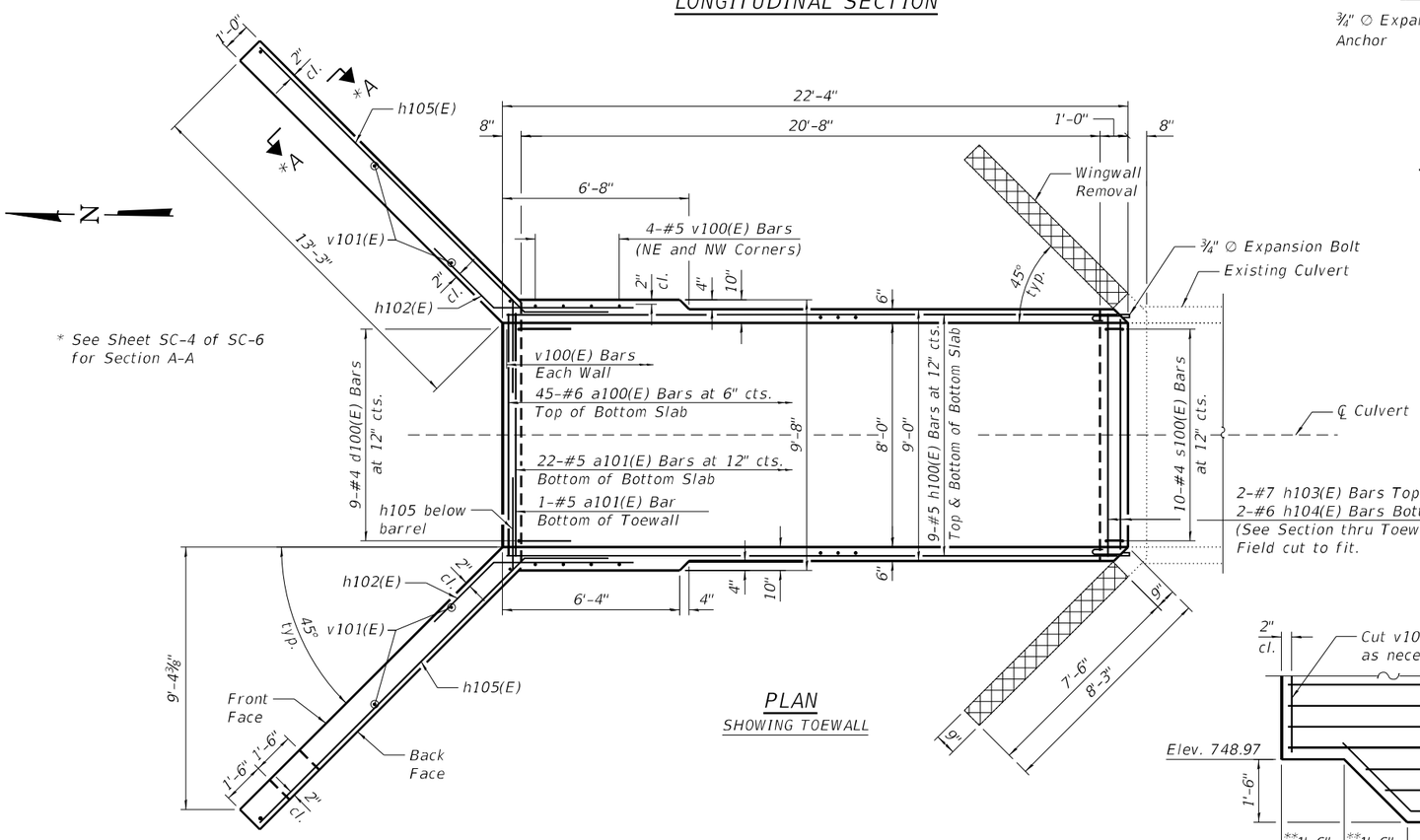

PLAN

SHOWING TOEWALL

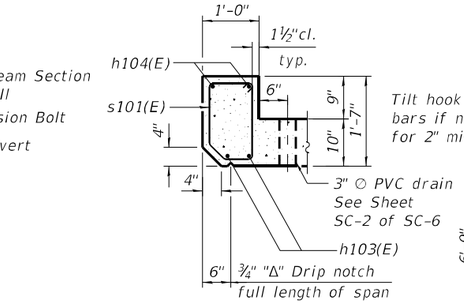

UPSTREAM

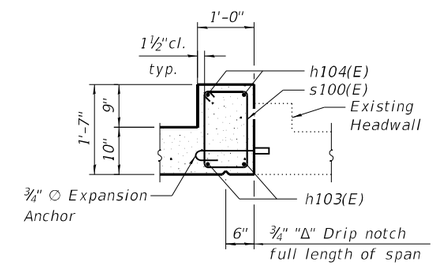

DOWNSTREAM

SECTION THRU HEADWALL

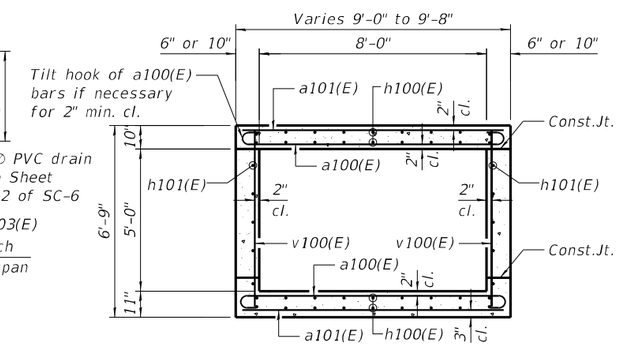

SECTION THRU BARREL

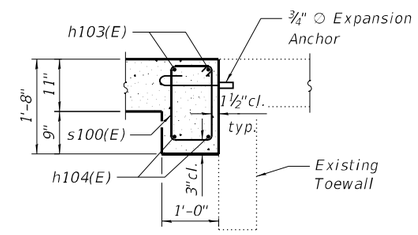

DOWNSTREAM

SECTION THRU TOEWALL

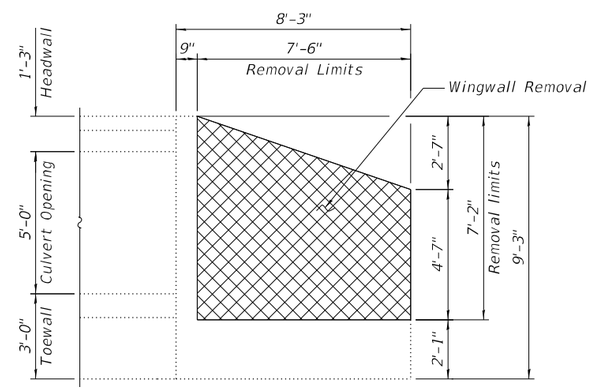

EXISTING WINGWALL ELEVATION

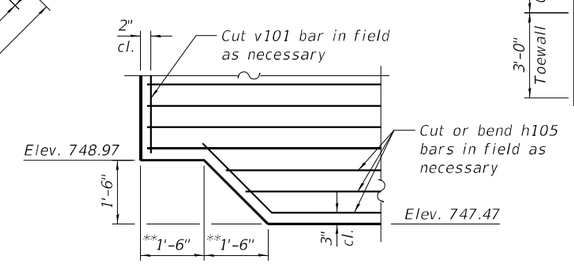

NOTCH DETAIL

(West Wingwall only)

**Measured along wingwall

Note:
A distance of half the length of the wingwall but not less than six feet of the barrel shall be poured monolithically with the wingwalls.

MODEL: Default
FILE NAME: pw:\\atlas-pw.bentley.com:atlas-pw-01\Documents\Projects\100111001 CV 008\003\10 CAD\3_Sheets\12_Structural\Single Box Culvert\D160R76-SingleBox_003-Culvert Details.dgn
3/7/2025 12:00:03 PM

AEG ATLAS ENGINEERING GROUP, LTD.	USER NAME =	DESIGNED - NKA	REVISED -	STATE OF ILLINOIS DEPARTMENT OF TRANSPORTATION	CULVERT DETAILS PAULING ROAD CULVERT	F.A.I. RTE.	SECTION	COUNTY	TOTAL SHEETS	SHEET NO.
		CHECKED - EH	REVISED -			57	99-1HB-2-BR	WILL	133	95
	PLOT SCALE =	DRAWN - KB	REVISED -			CONTRACT NO. 60R76				
	PLOT DATE =	CHECKED - 3/3/2025	REVISED -		SHEET SC-3 OF SC-6 SHEETS	ILLINOIS	FED. AID PROJECT			

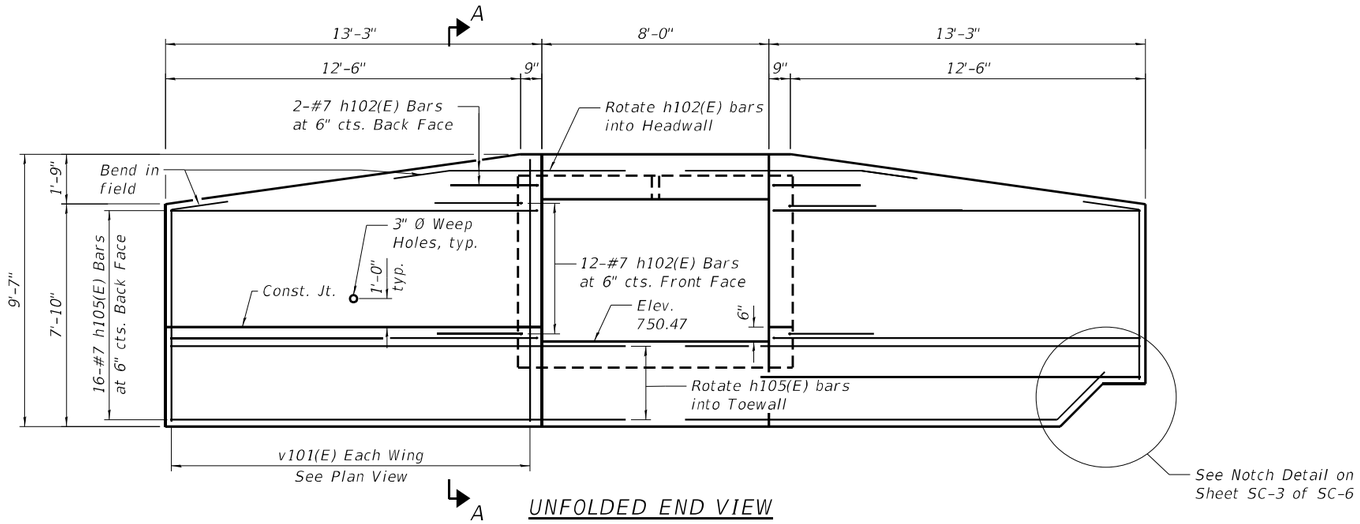

UNFOLDED END VIEW

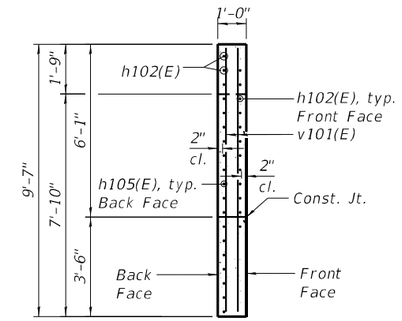

SECTION A-A

BILL OF MATERIAL

Bar	No.	Size	Length	Shape
a100(E)	86	#6	10'-0"	
a101(E)	44	#5	8'-8"	
d100(E)	9	#4	4'-5"	
h100(E)	36	#5	22'-0"	
h101(E)	10	#4	22'-0"	
h102(E)	28	#7	8'-0"	
h103(E)	6	#7	9'-4"	
h104(E)	6	#6	9'-4"	
h105(E)	32	#7	16'-1"	
s100(E)	20	#4	4'-9"	
s101(E)	10	#4	4'-7"	
v100(E)	80	#5	6'-4"	
v101(E)	8	#4	9'-2"	
Concrete Box Culverts			Cu. Yd.	27.6
Reinforcement Bars, Epoxy Coated			Pound	5,070
Concrete Removal			Cu. Yd.	2.5

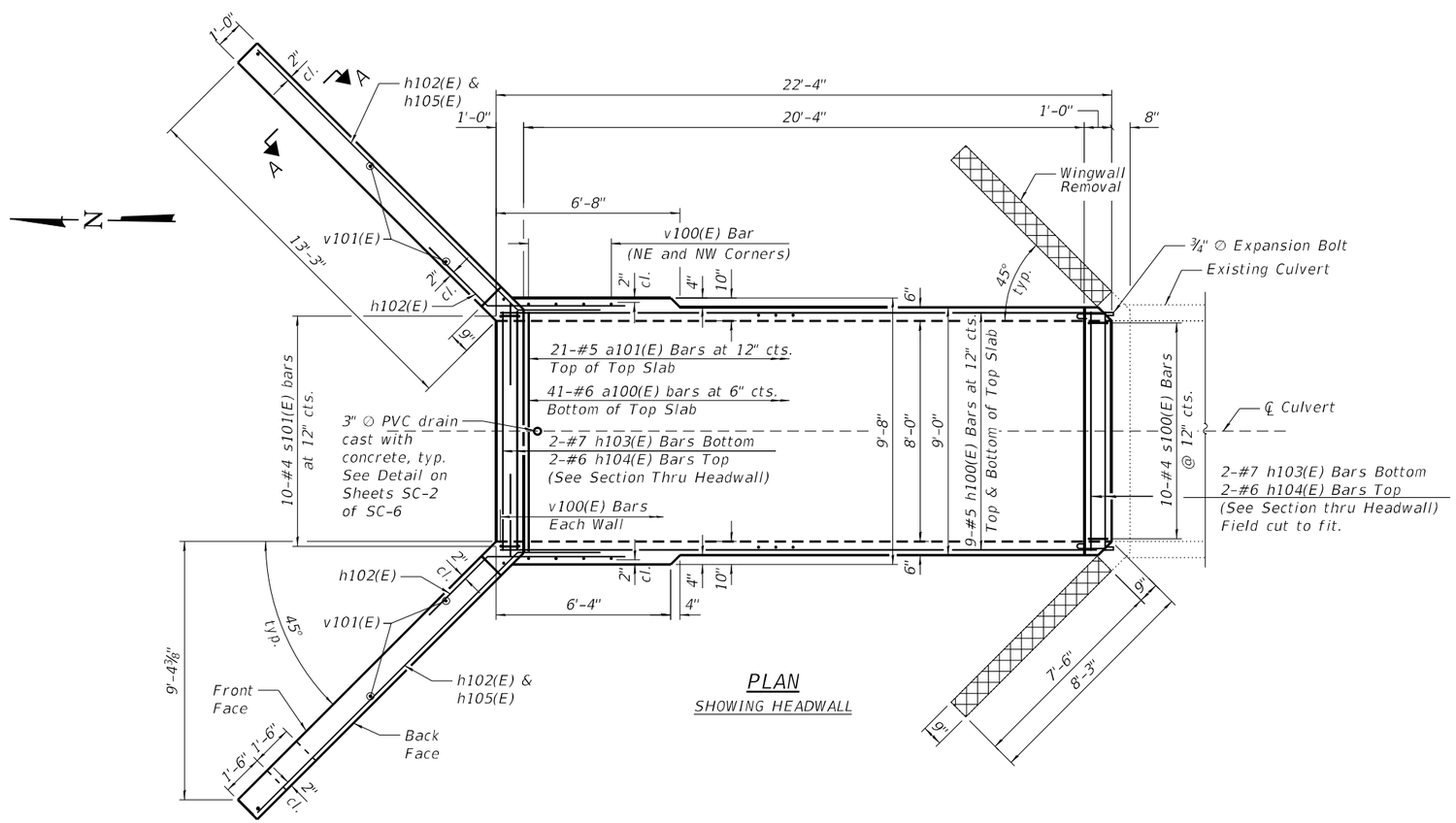

PLAN

SHOWING HEADWALL

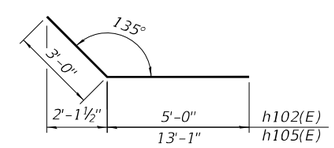

BARS h102(E) & h105(E)

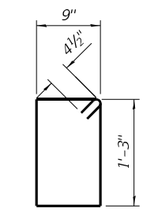

BAR s100(E)

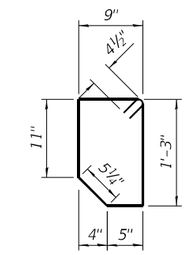

BAR s101(E)

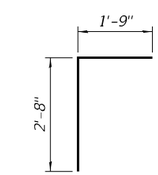

BAR d100(E)

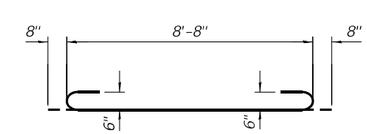

BAR a100(E)

MODEL: Default
FILE NAME: pw:\\atlas-pw.bentley.com:atlas-pw-01\Documents\Projects\100\11001 CV 008\003\10 CAD\3_Sheets\12_Structural\Single Box Culvert\D160R76-SingleBox_004-Culvert Details.dgn
3/7/2025 12:00:11 PM

AEG ATLAS ENGINEERING GROUP, LTD.

USER NAME =	DESIGNED - NKA	REVISED -
	CHECKED - EH	REVISED -
PLOT SCALE =	DRAWN - KB	REVISED -
PLOT DATE =	CHECKED - 12/11/2024	REVISED -

STATE OF ILLINOIS
DEPARTMENT OF TRANSPORTATION

CULVERT DETAILS
PAULING ROAD CULVERT

SHEET SC-4 OF SC-6 SHEETS

F.A.I RTE.	SECTION	COUNTY	TOTAL SHEETS	SHEET NO.
57	99-1HB-2-BR	WILL	133	96

CONTRACT NO. 60R76

ILLINOIS | FED. AID PROJECT

Illinois Department of Transportation
Division of Highways
GSG Consultants, Inc.

SOIL BORING LOG

Date 9/28/22

ROUTE Pauling Road DESCRIPTION Culvert Boring LOGGED BY EH

SECTION I-57 at Pauling Road LOCATION , SEC. 31, TWP. 34N, RNG. 13E,
Latitude , Longitude

COUNTY WILL DRILLING RIG CME 75 HAMMER TYPE AUTO
DRILLING METHOD HSA HAMMER EFF (%) 79.8

STRUCT. NO.
Station 112+58

BORING NO. B-1
Station 113+63
Offset 5.27ft LT
Ground Surface Elev. 771.39 ft

Surface Water Elev. N/A ft
Stream Bed Elev. N/A ft

Groundwater Elev.:
First Encounter None ft
Upon Completion N/A ft
After N/A Hrs. N/A ft

Description	Elev.	DEPTH (ft)	BLOWS (/6")	UCS Qu (tsf)	MOIST (%)
10 inches of Asphalt 2 inches of Aggregate Base	770.56 770.39				
Brown, Black and Gray, Moist FILL: SILTY CLAY, trace gravel			10 5 4	4.0 P	18
		-5	10 5 5	3.0 P	17
			4 4 5	3.3 B	19
		-10	4 3 4	3.3 B	16
			2 4 6	2.5 B	23
		-15	3 7 8	3.5 B	20
	755.39				
Dark Gray, Moist FILL: SILTY CLAY			5 6 9	5.0 B	21
	752.89				
		-20	2 4 6	1.7 B	19
Stiff to Very Stiff Brown and Gray, Moist SILTY CLAY, trace gravel (CL/ML) *(continued)*			4 5 8	3.3 B	20
	748.39				
Stiff to Very Stiff Gray, Moist to Very Moist SILTY CLAY, trace gravel (CL)			3 4 4	2.1 B	23
		-25	2 4 6	1.7 B	14
		-30	3 4 7	2.5 B	16
		-35	8 4 5	1.7 B	15
		-40	3 4 4	1.7 B	15

The Unconfined Compressive Strength (UCS) Failure Mode is indicated by (B-Bulge, S-Shear, P-Penetrometer)
The SPT (N value) is the sum of the last two blow values in each sampling zone (AASHTO T206)

BBS, form 137 (Rev. 8-99)

Illinois Department of Transportation
Division of Highways
GSG Consultants, Inc.

SOIL BORING LOG

Date 9/28/22

ROUTE Pauling Road DESCRIPTION Culvert Boring LOGGED BY EH

SECTION I-57 at Pauling Road LOCATION , SEC. 31, TWP. 34N, RNG. 13E,
Latitude , Longitude

COUNTY WILL DRILLING RIG CME 75 HAMMER TYPE AUTO
DRILLING METHOD HSA HAMMER EFF (%) 79.8

STRUCT. NO.
Station 112+58

BORING NO. B-1
Station 113+63
Offset 5.27ft LT
Ground Surface Elev. 771.39 ft

Surface Water Elev. N/A ft
Stream Bed Elev. N/A ft

Groundwater Elev.:
First Encounter None ft
Upon Completion N/A ft
After N/A Hrs. N/A ft

Description	Elev.	DEPTH (ft)	BLOWS (/6")	UCS Qu (tsf)	MOIST (%)
Stiff to Very Stiff Gray, Moist to Very Moist SILTY CLAY, trace gravel (CL) *(continued)*			4 8 6	2.5 B	19
		-45	3 5 6	2.5 B	27
	721.39	-50			
End of Boring		-55			
		-60			

The Unconfined Compressive Strength (UCS) Failure Mode is indicated by (B-Bulge, S-Shear, P-Penetrometer)
The SPT (N value) is the sum of the last two blow values in each sampling zone (AASHTO T206)

BBS, form 137 (Rev. 8-99)

MODEL: Default
FILE NAME: pw:\\atlas-pw.bentley.com:atlas-pw-01\Documents\Projects\10011\1001 CV 008\003\10 CAD\3_Sheets\12_Structural\Single Box Culvert\D160R76-SingleBox_005-Boring Log.dgn

AEG ATLAS ENGINEERING GROUP, LTD.

USER NAME =	DESIGNED - NKA	REVISED -
	CHECKED - JKL	REVISED -
PLOT SCALE =	DRAWN - KB	REVISED -
PLOT DATE =	CHECKED - 4/19/2024	REVISED -

STATE OF ILLINOIS
DEPARTMENT OF TRANSPORTATION

BORING LOG
PAULING ROAD CULVERT

SHEET SC-5 OF SC-6 SHEETS

F.A.I RTE.	SECTION	COUNTY	TOTAL SHEETS	SHEET NO.
57	99-1HB-2-BR	WILL	133	97
		CONTRACT NO. 60R76		
		ILLINOIS FED. AID PROJECT		

3/7/2025 12:00:19 PM

STATE OF ILLINOIS
DEPARTMENT OF PUBLIC WORKS & BUILDINGS
DIVISION OF HIGHWAYS

F.A.I. RTE.	SECTION	COUNTY	TOTAL SHEETS	SHEET NO.
FAI 57	99-1 / 18-2	WILL	40	8

SHEET NO
SHEETS

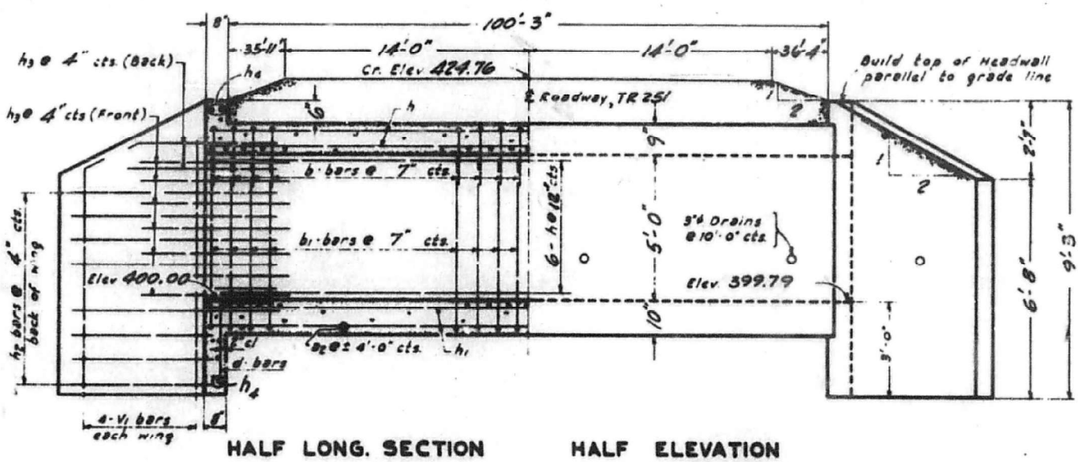

HALF LONG. SECTION HALF ELEVATION

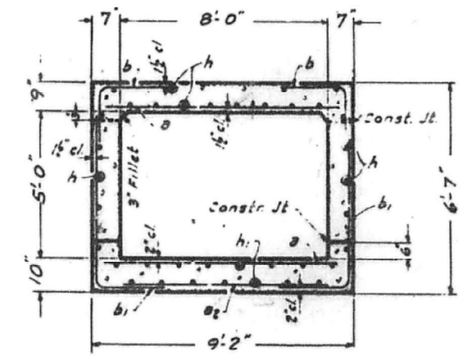

SECTION THRU BARREL

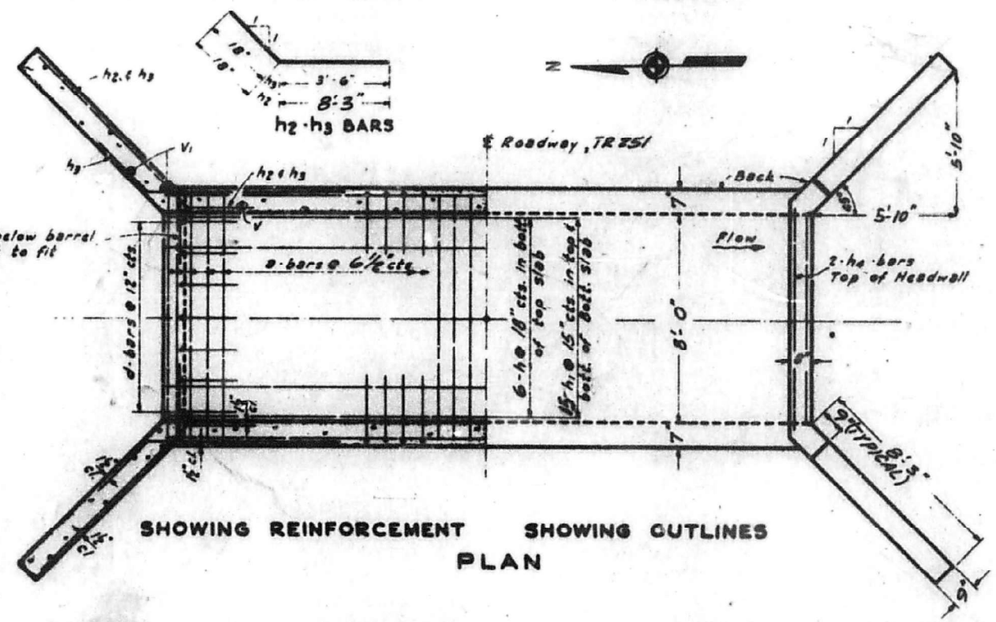

SHOWING REINFORCEMENT SHOWING OUTLINES

PLAN

d-BAR

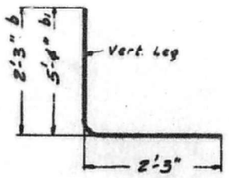

b-b1 BARS

BILL OF MATERIAL

BAR	NO.	SIZE	LENGTH
a	376	#7	8'-10"
a2	26	#4	5'-6"
b	350	#5	4'-6"
b1	350	#5	7'-7"
V	4	#4	6'-4"
V1	16	#4	8'-6"
d	16	#4	4'-6"
h	88	#6	26'-9"
h1	68	#6	26'-9"
h2	80	#5	9'-9"
h3	80	#5	5'-0"
h4	10	#8	8'-10"
Class "X" Concrete		Cu.Yds.	85.1
Reinforcement Bars		Lbs.	18,760

Note - All bars shall be round ASTM A305-49. The size number is the number of ⅛ inches in the nominal diameter.

STANDARD	COMPUTED	J.M.
	CHECKED	J.T.C.
	DRAWN	J.S. Holecki
	CHECKED	
SPE-AL	ASSEMBLED	
	CHECKED	

LEGAL ... May 26 1967
PASSED
APPROVED

Rev. Std. Dwg. - 11-60 - J.S.H.

GENERAL NOTES

Class X Concrete shall be used throughout.
Culvert walls and slab may be poured monolithically.
Exposed edges shall be beveled ¾".
The wing walls shall be poured monolithically with barrel for a distance of six feet along the barrel.
The top of the culvert, the bks. of sidewalls above the lower const. jt. & the bks. of wings shall be waterproofed in acc. with art. 5121 of the std. sp.

f_c = 1400 Psi Barrel
f_s = 20,000 #/□" barrel
f_c = 1200 #/□" wings
n = 10

H15 LOADING

CULVERT DESIGN (8'x5')
STA. 11032+75 TR. 251

STANDARD 2030

USER NAME =	DESIGNED - NKA	REVISED -	
	CHECKED - JKL	REVISED -	
PLOT SCALE =	DRAWN - KB	REVISED -	
PLOT DATE =	CHECKED - 4/19/2024	REVISED -	

AEG ATLAS ENGINEERING GROUP, LTD.

STATE OF ILLINOIS
DEPARTMENT OF TRANSPORTATION

REFERENCE : 1960 CULVERT PLANS
PAULING ROAD CULVERT

SHEET SC-6 OF SC-6 SHEETS

F.A.I RTE.	SECTION	COUNTY	TOTAL SHEETS	SHEET NO.
57	99-1H8-2-BR	WILL	133	98
		CONTRACT NO. 60R76		
	ILLINOIS	FED. AID PROJECT		

MODEL: Default
FILE NAME: pw:\\atlas-pw.bentley.com:atlas-pw-01\Documents\Projects\100111001 CV 008\003\10 CAD\3_Sheets\12_Structural\Single Box Culvert\D160R76-SingleBox_006-ExistingCulvert Plans.dgn
3/7/2025 12:00:33 PM

B.M.: Mag Nail Set Sta. 108+06.59 Offset 12.64' LT Elev. 776.90

Existing Structure: S.N. 099-0540 was constructed in 1967 under Section 99-1HB-2. The structure consists of a double box culvert 226'-3" long with 6'-0" wide by 3'-4" high barrels and flared wingwalls. Skew is 40 degrees. No traffic control will be required.

DESIGN STRESSES

FIELD UNITS (EXISTING)

f'c = 3,500 psi
fy = 40,000 psi (Reinforcement)

DESIGN SPECIFICATIONS

2002 AASHTO LFD Bridge Design Specifications, 17th Edition

LOADING HS-20

No future wearing surface.

INDEX OF SHEETS

SD-1. General Plan and Elevation
SD-2. General Data

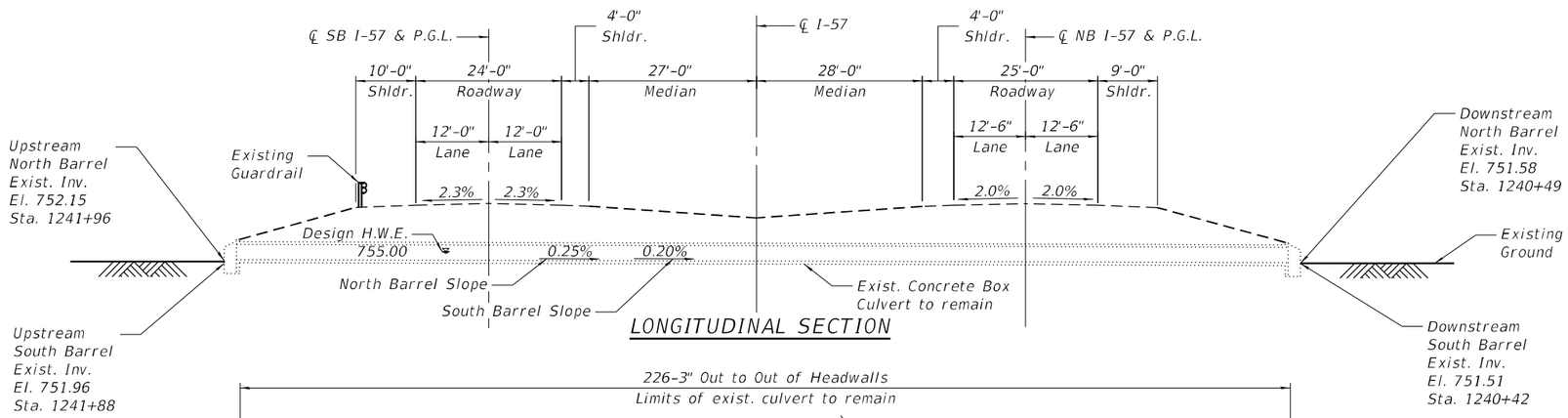

LONGITUDINAL SECTION

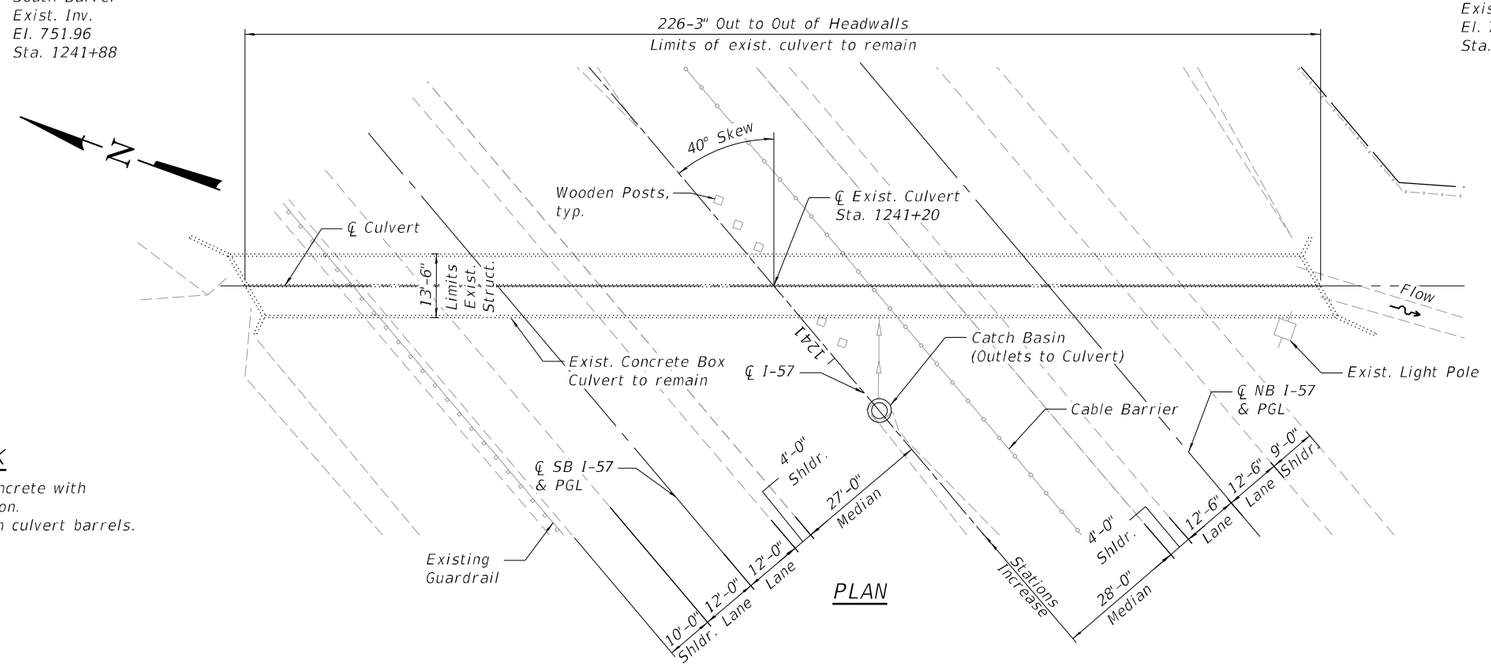

PLAN

EAMON HOMEDI 081-009103 LICENSED STRUCTURAL ENGINEER STATE OF ILLINOIS

EAMON HOMEDI, P.E., S.E.
DATE: 03/06/2025
NO. 081-009103
EXP. DATE 11/30/2026

SCOPE OF WORK

1. Repair headwall concrete with epoxy crack injection.
2. Remove debris from culvert barrels.

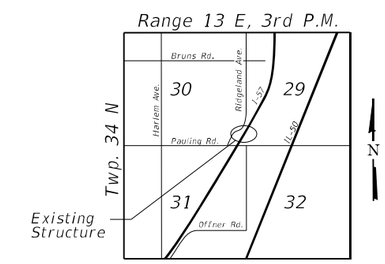

LOCATION SKETCH

WATERWAY INFORMATION TABLE

Drainage Area = 0.45 square miles
Existing Overtopping Elev. = 759.20 @ Sta. Unknown

Flood Event	Freq. Yr.	Discharge ft3/s	Waterway Opening - ft2		Natural H.W.E. - ft	Head - ft		Headwater Elevation - ft	
			Existing	Proposed		Existing	Proposed	Existing	Proposed
Design	50	214	36.1		755.0	0.7		755.7	
Base	100	262	39.4		755.3	1.0		756.3	
Scour Design Check									
Overtop Existing	<500	392							
Overtop Proposed									
Max. Calc.	500	395	40.0		755.3	3.9		759.2	

10-Year Velocity through Existing Structure = 4 ft/s
2-Yr. Flow Rate = 50 cu. ft./s

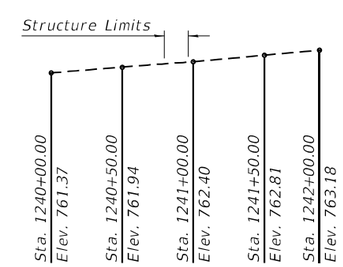

EXISTING PROFILE
(Along I-57 NB P.G.L.)

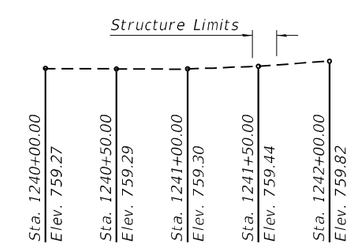

EXISTING PROFILE
(Along I-57 SB P.G.L.)

GENERAL PLAN AND ELEVATION
I-57 AT PAULING ROAD
F.A.I. RTE. 57
SEC. 99-1HB-2-BR
WILL COUNTY
STATION 1241+20.00
STRUCTURE NO. 099-0540

MODEL: Default
FILE NAME: pw:\\atlas-pw.bentley.com:atlas-pw01\Documents\Projects\10011\1001 CV 008\003\10 CAD\3_Sheets\12_Structural\Double Box Culvert\D160R76-DoubleBoxGP&E.dgn
3/7/2025 12:01:44 PM

AEG ATLAS ENGINEERING GROUP, LTD.

USER NAME =	DESIGNED - NKA	REVISED -	
	CHECKED - JKL	REVISED -	
PLOT SCALE =	DRAWN - KB	REVISED -	
PLOT DATE =	CHECKED - 4/19/2024	REVISED -	

STATE OF ILLINOIS
DEPARTMENT OF TRANSPORTATION

GENERAL PLAN AND ELEVATION
STRUCTURE NO. 099-0540
SHEET SD-1 OF SD-2 SHEETS

F.A.I. RTE.	SECTION	COUNTY	TOTAL SHEETS	SHEET NO.
57	99-1HB-2-BR	WILL	133	99
		CONTRACT NO. 60R76		
		ILLINOIS	FED. AID PROJECT	

GENERAL NOTES

Plan dimensions and details relative to the existing structure have been taken from existing plans and are subject to nominal construction variations. The contractor shall field verify existing dimensions and details affecting new construction and make necessary approved adjustments prior to construction or ordering materials. Such variations shall not be cause for change in scope of work; however, the Contractor will be paid for the quantity actually furnished at the unit price bid for the work.

Crack lengths shown are intended as a guideline for bidding purposes. Actual repair lengths shall be determined in the field by the Engineer. A nominal amount of additional repair quantities have been provided to account for repairs not shown.

TOTAL BILL OF MATERIAL

ITEM	UNIT	TOTAL
Epoxy Crack Injection	Foot	6
Debris Removal	Cu. Yd.	1

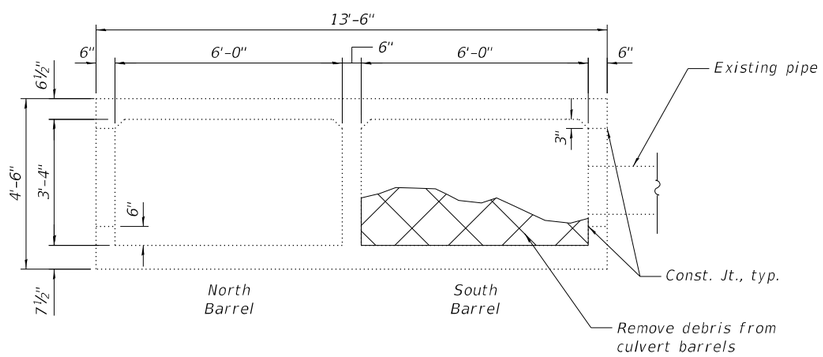

SECTION THRU BARREL

(Looking southeast)
(Reinforcement not shown)

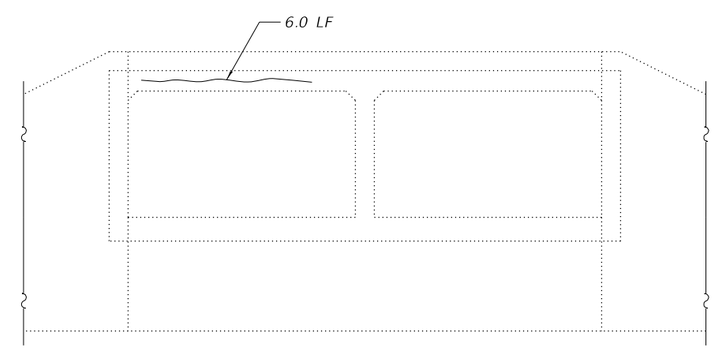

END ELEVATION

(Looking northwest)

LEGEND

Epoxy Crack Injection

MODEL: Default
FILE NAME: pw:\\atlas-pw.bentley.com:atlas-pw-01\Documents\Projects\100\11001 CV 008\003\10 CAD\3_Sheets\12_Structural\Double Box Culvert\D160R76-DoubleBox_General

3/7/2025 12:01:53 PM

AEG ATLAS ENGINEERING GROUP, LTD.	USER NAME =	DESIGNED - NKA	REVISED -	STATE OF ILLINOIS DEPARTMENT OF TRANSPORTATION	GENERAL DATA STRUCTURE NO. 099-0540
		CHECKED - JKL	REVISED -		
	PLOT SCALE =	DRAWN - KB	REVISED -		
	PLOT DATE =	CHECKED - 4/19/2024	REVISED -		SHEET SD-2 OF SD-2 SHEETS

F.A.I. RTE.	SECTION	COUNTY	TOTAL SHEETS	SHEET NO.
57	99-1HB-2-BR	WILL	133	100
		CONTRACT NO. 60R76		
		ILLINOIS	FED. AID PROJECT	

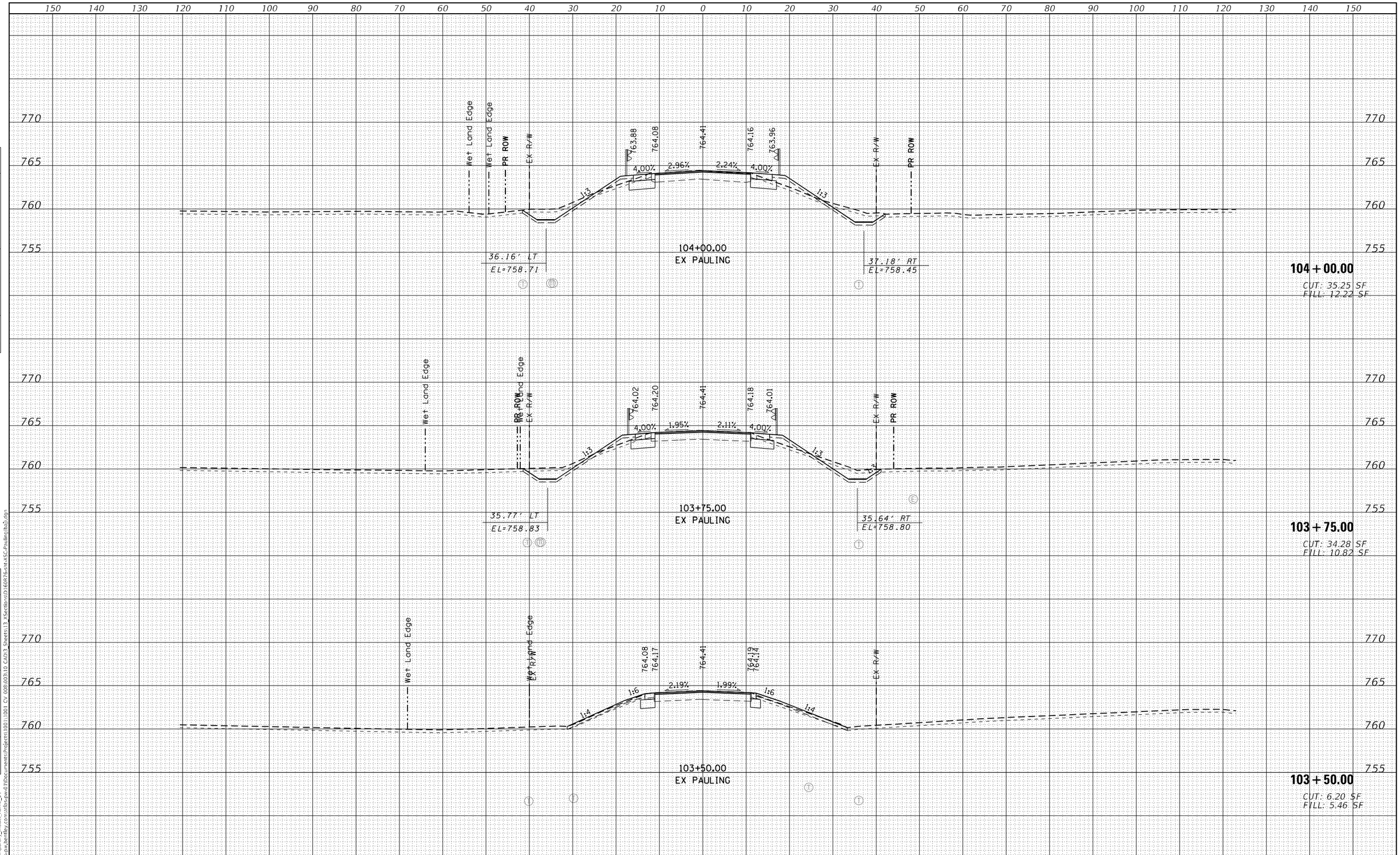

FINAL SURVEY	BY	DATE
SURVEYED		
PLOTTED		
TEMPLATE		
AREAS		
AREAS CHECKED		
NOTE BOOK		
NO.		

ORIGINAL SURVEY	BY	DATE
SURVEYED		
PLOTTED		
TEMPLATE		
AREAS		
AREAS CHECKED		
NOTE BOOK		
NO.		

MODEL: XS_SHEET_temporary_model_name_01
FILE NAME: pw:\\atlas-pw.bentley.com:atlas-pw-01\Documents\Projects\100\1001 CV 008\003\10 CAD\3 Sheets\13 xSections\D160R76-sht-xSC-Pauling(ba).dgn

AEG ATLAS ENGINEERING GROUP, LTD.

USER NAME = cpujari	DESIGNED - BAJ	REVISED -
	DRAWN - BAJ	REVISED -
PLOT SCALE = 20.0000 ' / in.	CHECKED - BA	REVISED -
PLOT DATE = 3/7/2025	DATE - 03/06/2024	REVISED -

STATE OF ILLINOIS
DEPARTMENT OF TRANSPORTATION

CROSS SECTIONS
I-57 AT PAULING ROAD

SCALE: | SHEET 1 OF 24 SHEETS | STA. 103+50.00 TO STA. 104+00.00

F.A.I. RTE.	SECTION	COUNTY	TOTAL SHEETS	SHEET NO.
57	99-1HB-2-BR	WILL	133	101
		CONTRACT NO. 60R76		
		ILLINOIS	FED. AID PROJECT	

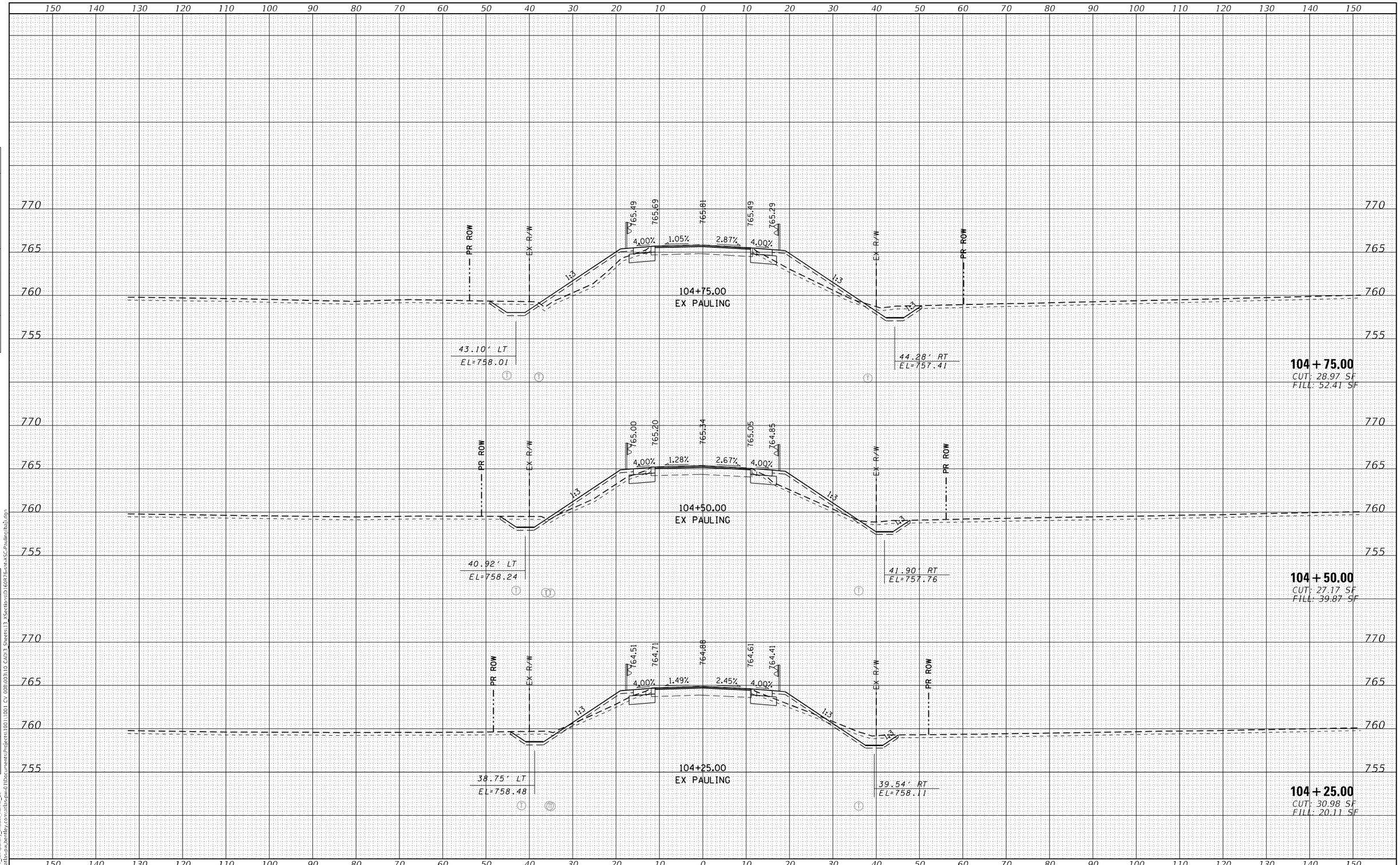

AEG ATLAS ENGINEERING GROUP, LTD.	USER NAME = cpujari	DESIGNED - BAJ	REVISED -
		DRAWN - BAJ	REVISED -
	PLOT SCALE = 20.0000 ' / in.	CHECKED - BA	REVISED -
	PLOT DATE = 3/7/2025	DATE - 03/06/2024	REVISED -

STATE OF ILLINOIS
DEPARTMENT OF TRANSPORTATION

CROSS SECTIONS
I-57 AT PAULING ROAD

SCALE: | SHEET 2 OF 24 SHEETS | STA. 104+25.00 TO STA. 104+75.00

F.A.I. RTE.	SECTION	COUNTY	TOTAL SHEETS	SHEET NO.
57	99-1HB-2-BR	WILL	133	102
		CONTRACT NO. 60R76		
		ILLINOIS	FED. AID PROJECT	

FINAL SURVEY | NOTE BOOK | NO. | SURVEYED | PLOTTED | TEMPLATE | AREAS | AREAS CHECKED | BY | DATE

ORIGINAL SURVEY | NOTE BOOK | NO. | SURVEYED | PLOTTED | TEMPLATE | AREAS | AREAS CHECKED | BY | DATE

MODEL: XS_SHEET_temporary_model name_02
FILE NAME: pw:\\atlas-pw.bentley.com:atlas-pw-01\Documents\Projects\1001\1001 CV 008\003\10 CAD\3 Sheets\13 XSections\D160R76-sht-XSC-Pauling(ba).dgn

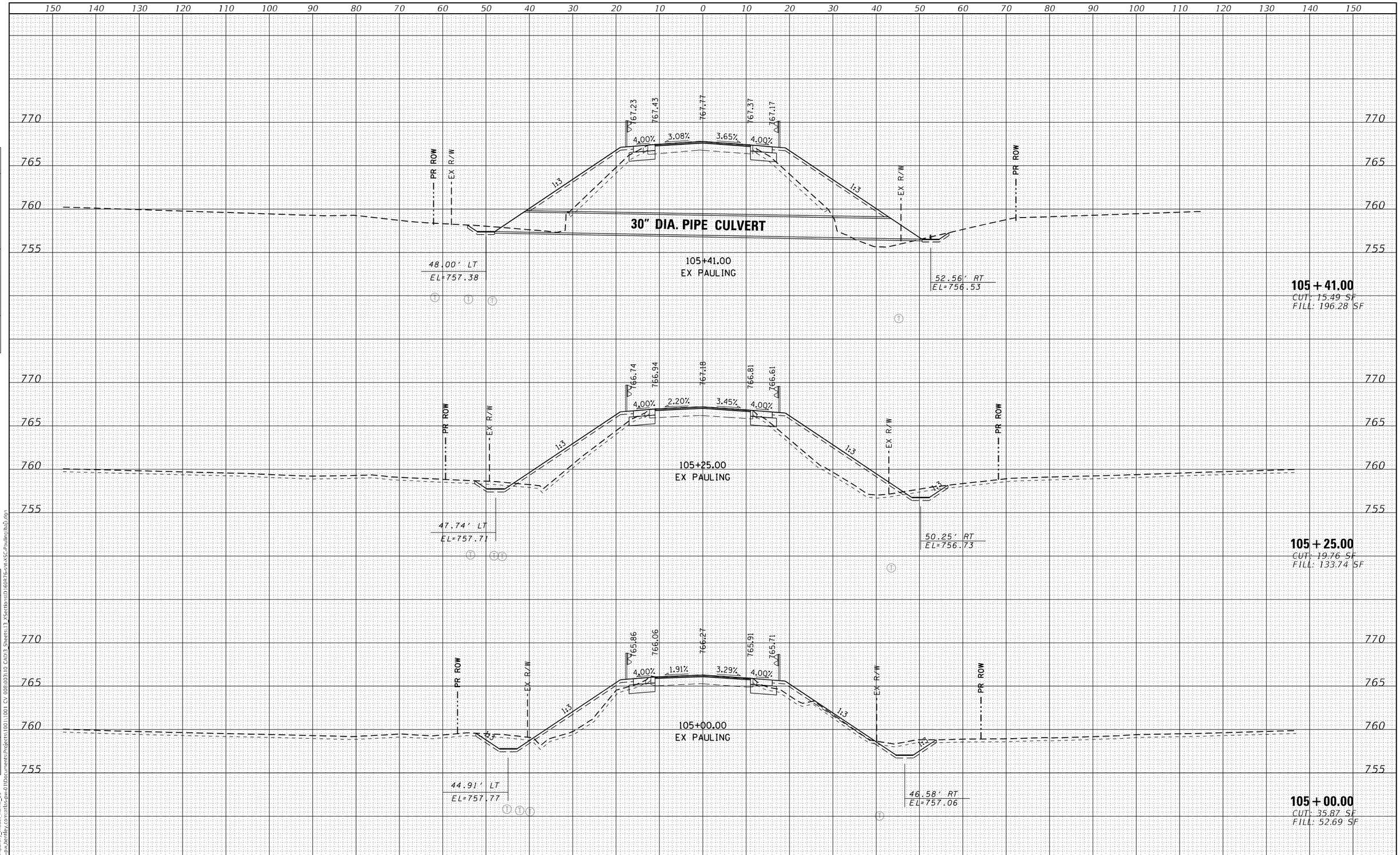

FINAL SURVEY	BY	DATE
SURVEYED		
PLOTTED		
TEMPLATE		
AREAS		
AREAS CHECKED		
NOTE BOOK NO.		

ORIGINAL SURVEY	BY	DATE
SURVEYED		
PLOTTED		
TEMPLATE		
AREAS		
AREAS CHECKED		
NOTE BOOK NO.		

MODEL: XS_SHEET_temporary_model_name_03
FILE NAME: pw:\\atlas-pw.bentley.com:atlas-pw-01\Documents\Projects\100\1001 CV 008\003\10 CAD\3_Sheets\13_XSections\D160R76-sht-XSC-Pauling(bal).dgn

AEG ATLAS ENGINEERING GROUP, LTD.

USER NAME = cpujari	DESIGNED - BAJ	REVISED -	
	DRAWN - BAJ	REVISED -	
PLOT SCALE = 20.0000 ' / in.	CHECKED - BA	REVISED -	
PLOT DATE = 3/7/2025	DATE - 03/06/2024	REVISED -	

STATE OF ILLINOIS
DEPARTMENT OF TRANSPORTATION

CROSS SECTIONS
I-57 AT PAULING ROAD

SCALE: | SHEET 3 OF 24 SHEETS | STA. 105+00.00 TO STA. 105+41.00

F.A.I. RTE.	SECTION	COUNTY	TOTAL SHEETS	SHEET NO.
57	99-1HB-2-BR	WILL	133	103
		CONTRACT NO. 60R76		
		ILLINOIS	FED. AID PROJECT	

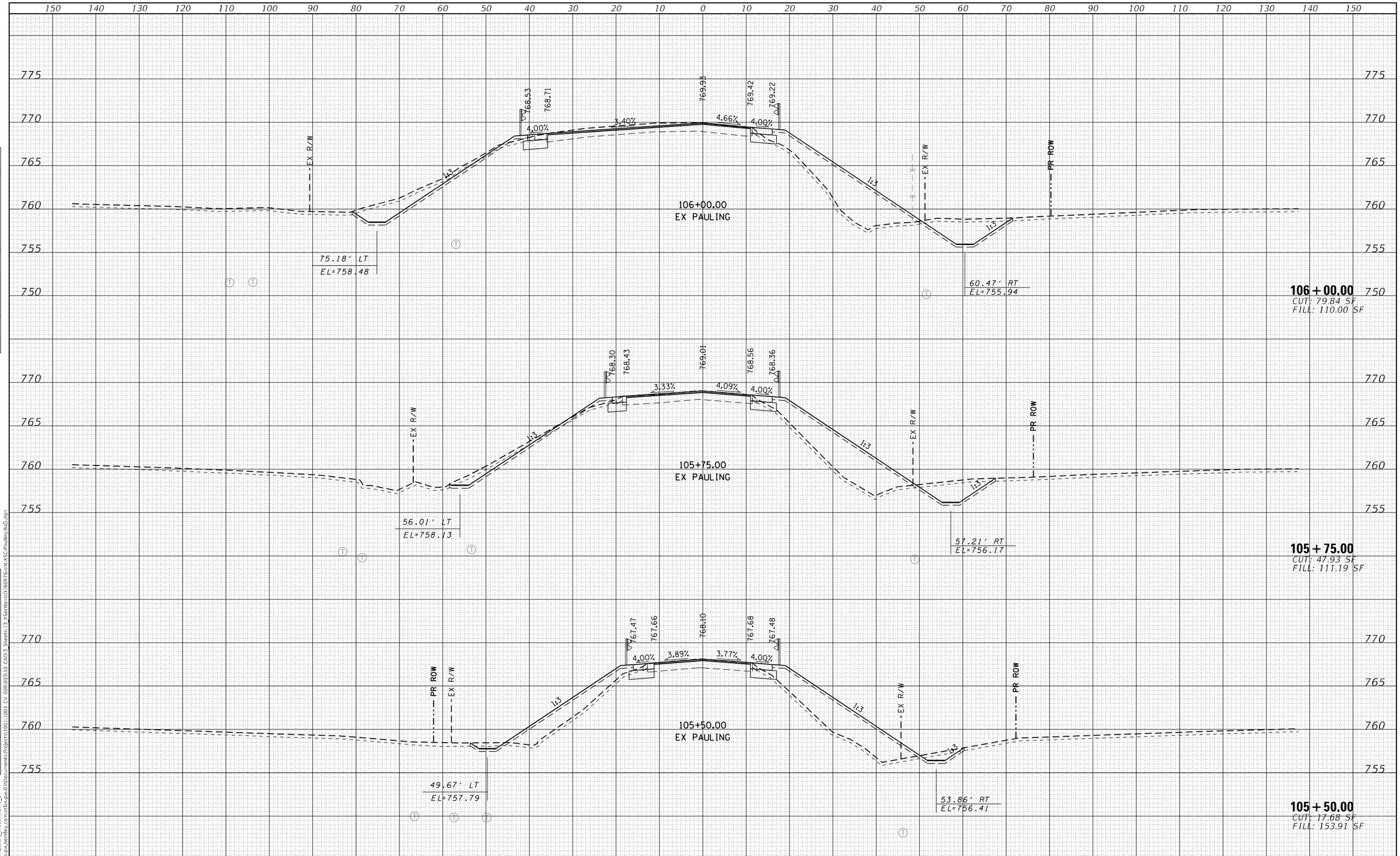

FINAL SURVEY	BY	DATE
SURVEYED		
PLOTTED		
TEMPLATE		
AREAS		
AREAS CHECKED		
NOTE BOOK		
NO.		

ORIGINAL SURVEY	BY	DATE
SURVEYED		
PLOTTED		
TEMPLATE		
AREAS		
AREAS CHECKED		
NOTE BOOK		
NO.		

MODEL: XS_SHEET_temporary_model_name_04
FILE NAME: pw:\\atlas-pw.bentley.com:atlas-pw-01\Documents\Projects\100110001 CV 008\003\10 CAD\3 Sheets\13 XSections\D160R76-sht-XSC-Pauling(ba).dgn

ATLAS ENGINEERING GROUP, LTD.

USER NAME = cpujari	DESIGNED - BAJ	REVISED -	
	DRAWN - BAJ	REVISED -	
PLOT SCALE = 20.0000 ' / in.	CHECKED - BA	REVISED -	
PLOT DATE = 3/7/2025	DATE - 03/06/2024	REVISED -	

STATE OF ILLINOIS
DEPARTMENT OF TRANSPORTATION

CROSS SECTIONS
I-57 AT PAULING ROAD

SCALE: | SHEET 4 OF 24 SHEETS | STA. 105+50.00 TO STA. 106+00.00

F.A.I. RTE.	SECTION	COUNTY	TOTAL SHEETS	SHEET NO.
57	99-1HB-2-BR	WILL	133	104

CONTRACT NO. 60R76

ILLINOIS | FED. AID PROJECT

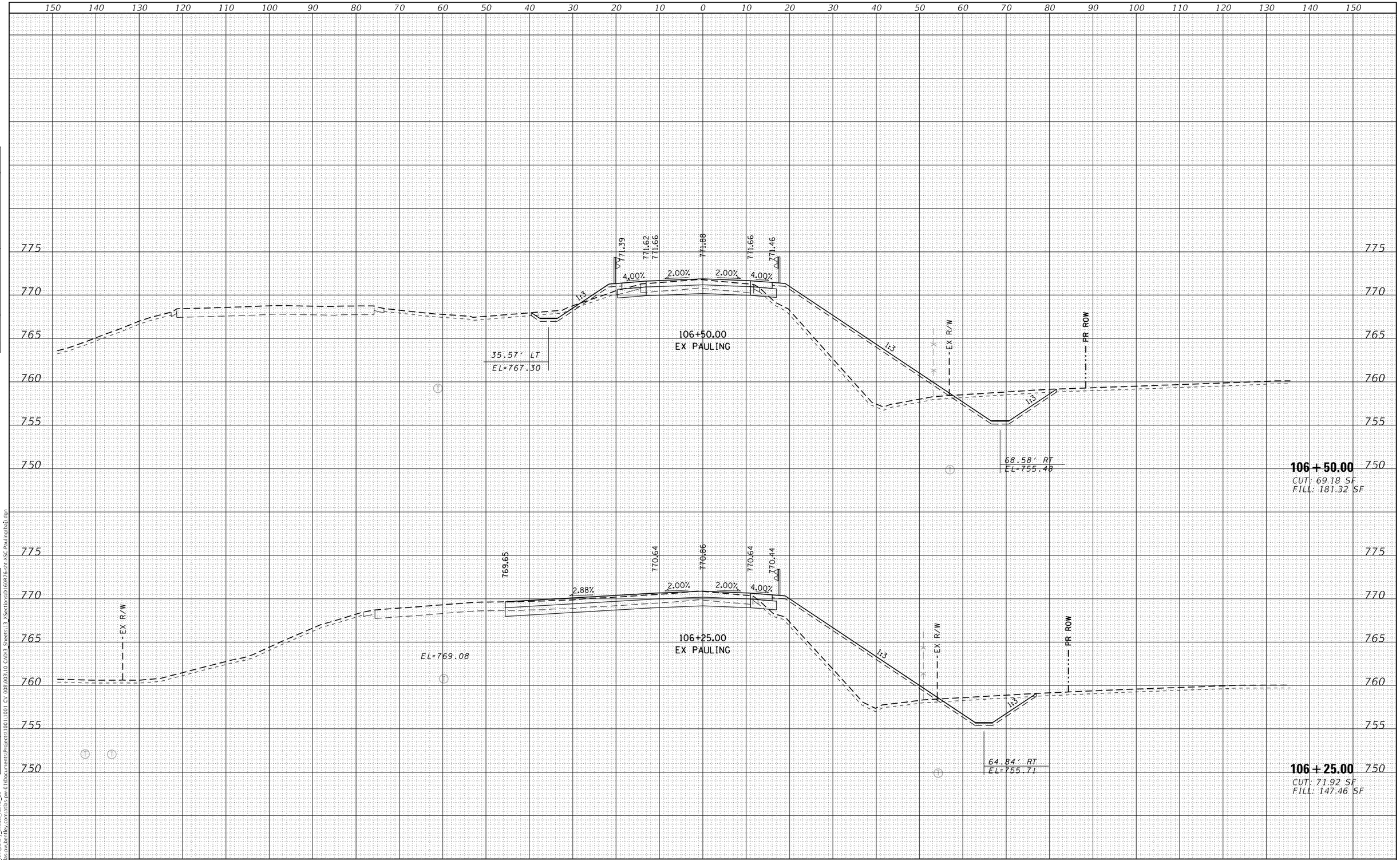

FINAL SURVEY	BY	DATE
SURVEYED		
PLOTTED		
TEMPLATE		
AREAS		
AREAS CHECKED		
NOTE BOOK NO.		

ORIGINAL SURVEY	BY	DATE
SURVEYED		
PLOTTED		
TEMPLATE		
AREAS		
AREAS CHECKED		
NOTE BOOK NO.		

MODEL: XS_SHEET_perpendicular_model_name_05
FILE NAME: pw:\\atlas-pw.bentley.com:atlas-pw-01\Documents\Projects\100\1001 CV 008\03\10 CAD\3 Sheets\13 XSections\D160R76-int-XSC-Pauling(ba).dgn

AEG ATLAS ENGINEERING GROUP, LTD.

USER NAME = cpujari	DESIGNED - BAJ	REVISED -
	DRAWN - BAJ	REVISED -
PLOT SCALE = 20.0000 ' / in.	CHECKED - BA	REVISED -
PLOT DATE = 3/7/2025	DATE - 03/06/2024	REVISED -

STATE OF ILLINOIS
DEPARTMENT OF TRANSPORTATION

CROSS SECTIONS
I-57 AT PAULING ROAD

SCALE: | SHEET 5 OF 24 SHEETS | STA. 106+25.00 TO STA. 106+50.00

F.A.I. RTE.	SECTION	COUNTY	TOTAL SHEETS	SHEET NO.
57	99-1HB-2-BR	WILL	133	105
		CONTRACT NO. 60R76		
		ILLINOIS	FED. AID PROJECT	

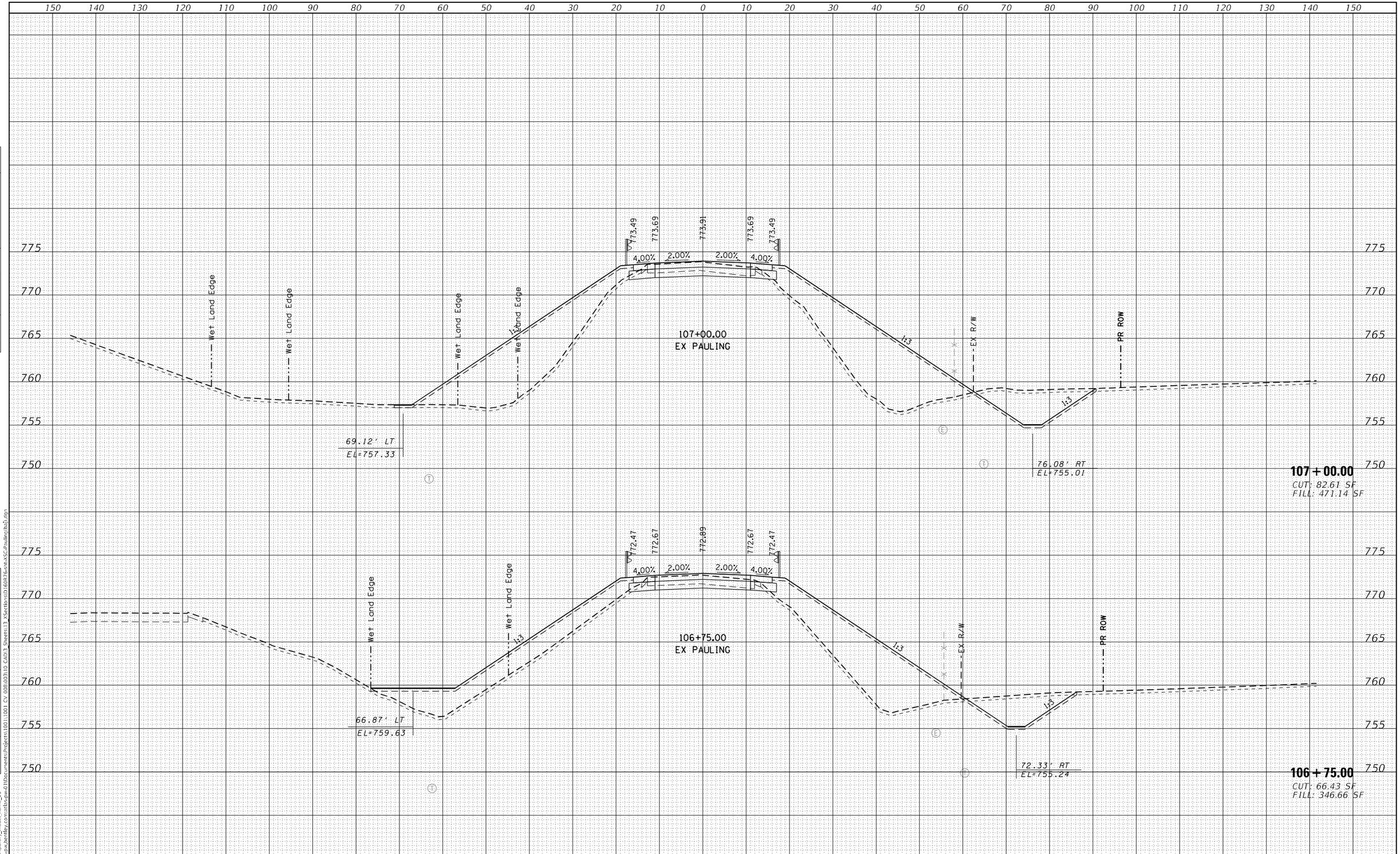

FINAL SURVEY	BY	DATE
SURVEYED		
PLOTTED		
TEMPLATE		
AREAS		
AREAS CHECKED		
NOTE BOOK		
NO.		

ORIGINAL SURVEY	BY	DATE
SURVEYED		
PLOTTED		
TEMPLATE		
AREAS		
AREAS CHECKED		
NOTE BOOK		
NO.		

MODEL: XS_SHEET_temporary_model name_06
FILE NAME: pw:\\atlas-pw.bentley.com:atlas-pw-01\Documents\Projects\1001 CV 008\003\10 CAD\3 Sheets\13_XSections\D160R76-ht-XSC-Pauling(baj).dgn

AEG ATLAS ENGINEERING GROUP, LTD.

USER NAME = cpujari	DESIGNED - BAJ	REVISED -	
	DRAWN - BAJ	REVISED -	
PLOT SCALE = 20.0000 ' / in.	CHECKED - BA	REVISED -	
PLOT DATE = 3/7/2025	DATE - 03/06/2024	REVISED -	

STATE OF ILLINOIS
DEPARTMENT OF TRANSPORTATION

CROSS SECTIONS
I-57 AT PAULING ROAD

SCALE: | SHEET 6 OF 24 SHEETS | STA. 106+75.00 TO STA. 107+00.00

F.A.I. RTE.	SECTION	COUNTY	TOTAL SHEETS	SHEET NO.
57	99-1HB-2-BR	WILL	133	106

CONTRACT NO. 60R76

ILLINOIS | FED. AID PROJECT

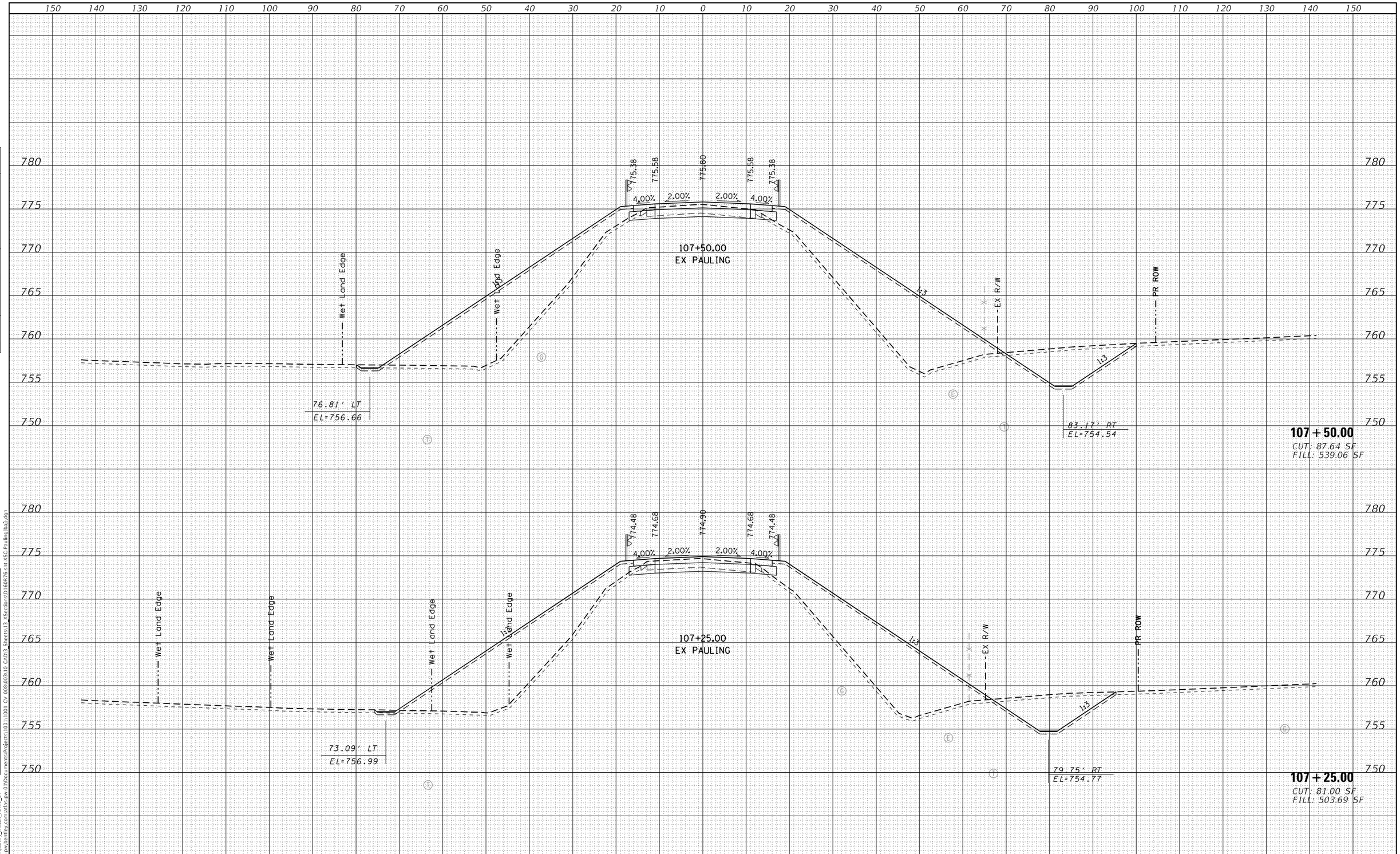

FINAL SURVEY	BY	DATE
SURVEYED		
PLOTTED		
TEMPLATE		
AREAS		
AREAS CHECKED		
NOTE BOOK		
NO.		

ORIGINAL SURVEY	BY	DATE
SURVEYED		
PLOTTED		
TEMPLATE		
AREAS		
AREAS CHECKED		
NOTE BOOK		
NO.		

MODEL: XS_SHEET_temporary_model_name_07
FILE NAME: pw:\\atlas-pw.bentley.com:atlas-pw-01\Documents\Projects\100\1001 CV 008\003\10 CAD\3 Sheets\13_2\Sections\D160R76-sht-XSC-Pauling(bal).dgn

AEG ATLAS ENGINEERING GROUP, LTD.

USER NAME = cpujari	DESIGNED - BAJ	REVISED -
	DRAWN - BAJ	REVISED -
PLOT SCALE = 20.0000 ' / in.	CHECKED - BA	REVISED -
PLOT DATE = 3/7/2025	DATE - 03/06/2024	REVISED -

STATE OF ILLINOIS
DEPARTMENT OF TRANSPORTATION

CROSS SECTIONS
I-57 AT PAULING ROAD

SCALE: | SHEET 7 OF 24 SHEETS | STA. 107+25.00 TO STA. 107+50.00

F.A.I. RTE.	SECTION	COUNTY	TOTAL SHEETS	SHEET NO.
57	99-1HB-2-BR	WILL	133	107
		CONTRACT NO. 60R76		
		ILLINOIS	FED. AID PROJECT	

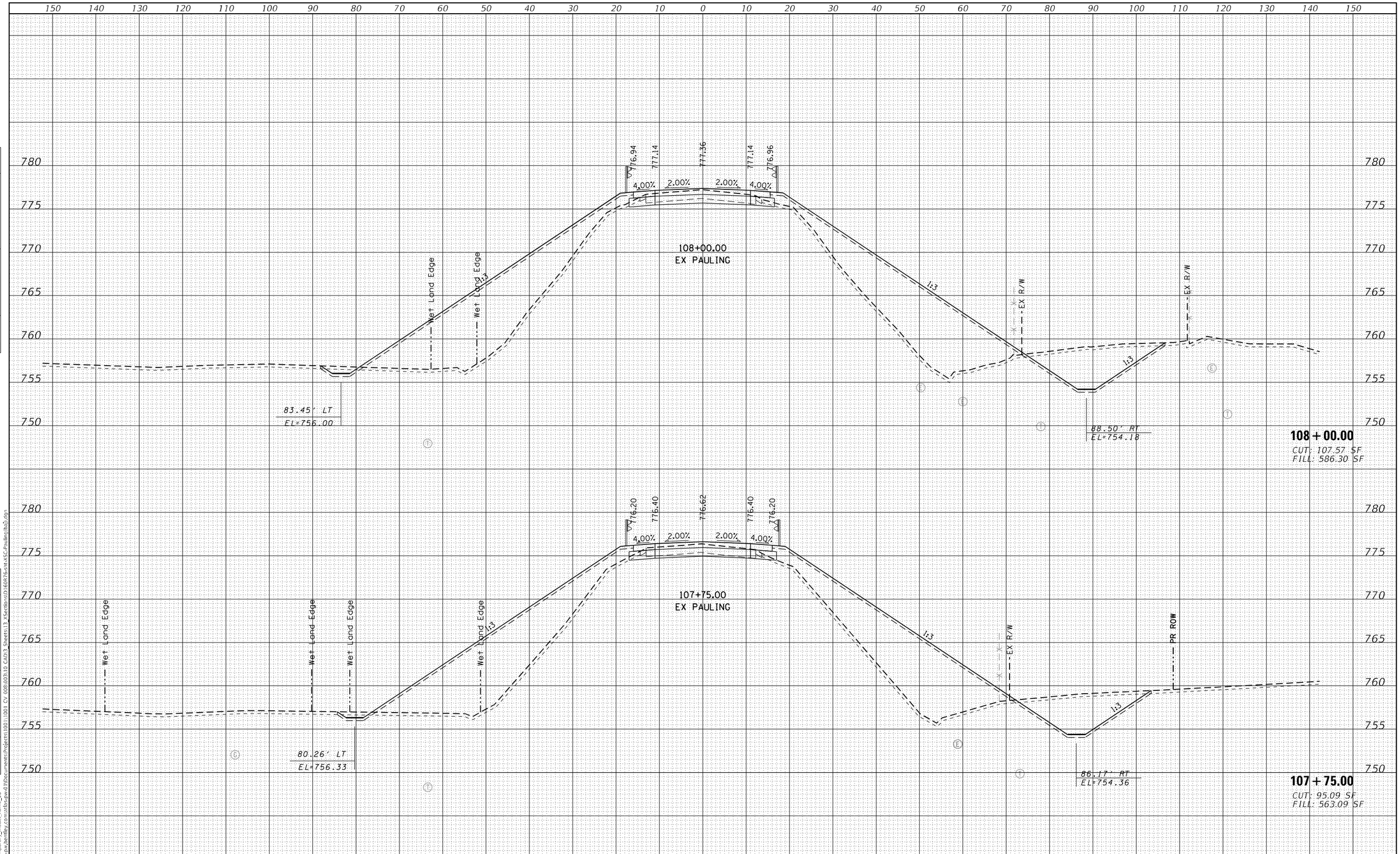

FINAL SURVEY	BY	DATE
SURVEYED		
PLOTTED		
TEMPLATE		
AREAS		
AREAS CHECKED		
NOTE BOOK		
NO.		

ORIGINAL SURVEY	BY	DATE
SURVEYED		
PLOTTED		
TEMPLATE		
AREAS		
AREAS CHECKED		
NOTE BOOK		
NO.		

MODEL: XS_SHEET_temporary_model_name_08
FILE NAME: pw:\\atlas-pw.bentley.com:atlas-pw-01\Documents\Projects\100\1001 CV 008\03\10 CAD\3 Sheets\13 2Sections\D160R76-sht-XSC-Pauling(bal).dgn

AEG ATLAS ENGINEERING GROUP, LTD.

USER NAME = cpujari	DESIGNED - BAJ	REVISED -	
	DRAWN - BAJ	REVISED -	
PLOT SCALE = 20.0000 ' / in.	CHECKED - BA	REVISED -	
PLOT DATE = 3/7/2025	DATE - 03/06/2024	REVISED -	

STATE OF ILLINOIS
DEPARTMENT OF TRANSPORTATION

CROSS SECTIONS
I-57 AT PAULING ROAD

SCALE: | SHEET 8 OF 24 SHEETS | STA. 107+75.00 TO STA. 108+00.00

F.A.I. RTE.	SECTION	COUNTY	TOTAL SHEETS	SHEET NO.
57	99-1HB-2-BR	WILL	133	108
		CONTRACT NO. 60R76		
		ILLINOIS	FED. AID PROJECT	

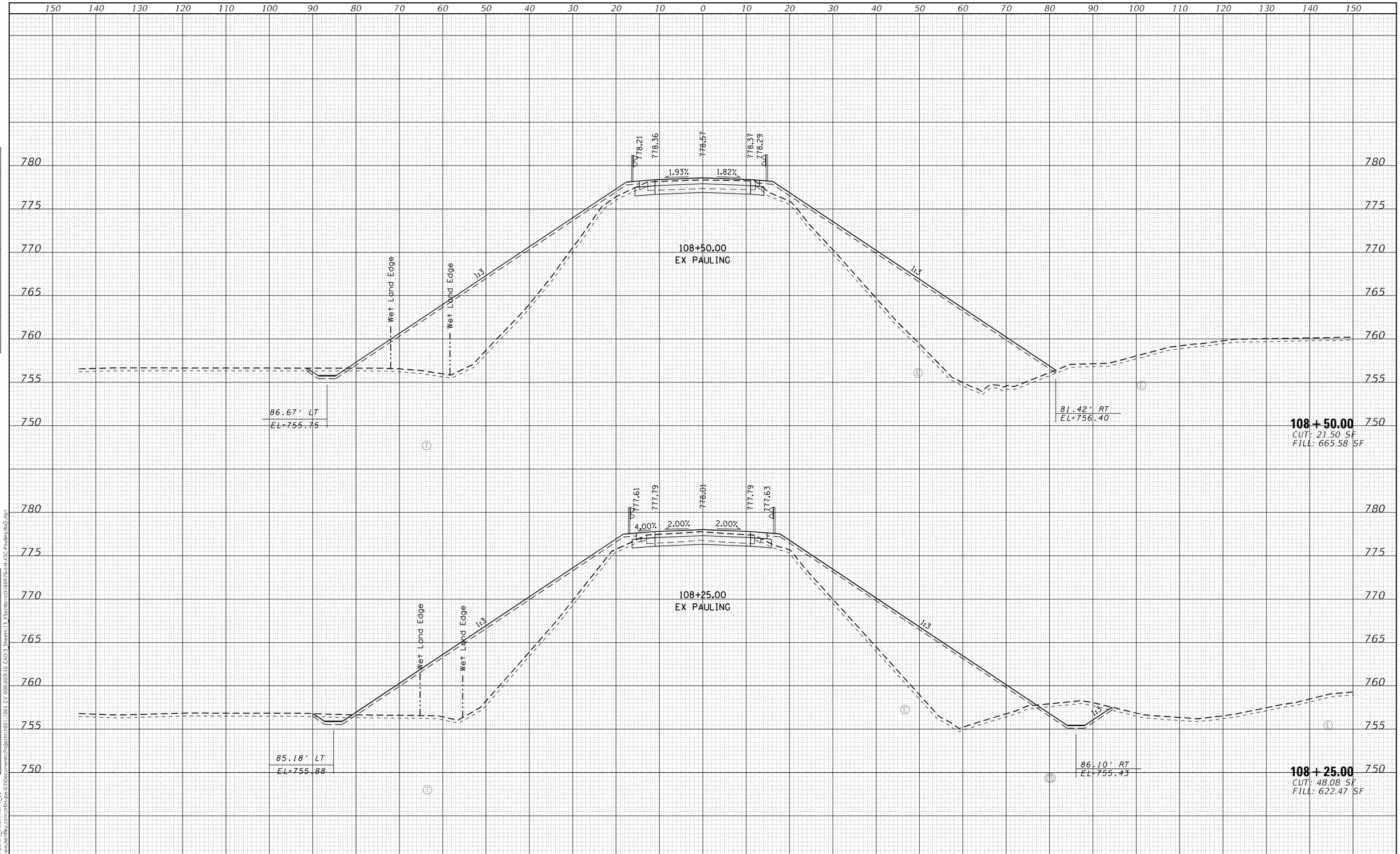

FINAL SURVEY	BY	DATE
SURVEYED		
PLOTTED		
TEMPLATE		
AREAS		
AREAS CHECKED		
NOTE BOOK		
NO.		

ORIGINAL SURVEY	BY	DATE
SURVEYED		
PLOTTED		
TEMPLATE		
AREAS		
AREAS CHECKED		
NOTE BOOK		
NO.		

MODEL: XS_SHEET_temporary_model_name_09
FILE NAME: pw:\\atlas-pw.bentley.com:atlas-pw-01\Documents\Projects\100\1001 CV 008\003\10 CAD\3 Sheets\13 2\Sections\D160R76-sht-XSC-Pauling(bal).dgn

AEG ATLAS ENGINEERING GROUP, LTD.

USER NAME = cpujari	DESIGNED - BAJ	REVISED -
	DRAWN - BAJ	REVISED -
PLOT SCALE = 20.0000 ' / in.	CHECKED - BA	REVISED -
PLOT DATE = 3/7/2025	DATE - 03/06/2024	REVISED -

STATE OF ILLINOIS
DEPARTMENT OF TRANSPORTATION

CROSS SECTIONS
I-57 AT PAULING ROAD

SCALE: | SHEET 9 OF 24 SHEETS | STA. 108+25.00 TO STA. 108+50.00

F.A.I. RTE.	SECTION	COUNTY	TOTAL SHEETS	SHEET NO.
57	99-1HB-2-BR	WILL	133	109

CONTRACT NO. 60R76

ILLINOIS | FED. AID PROJECT

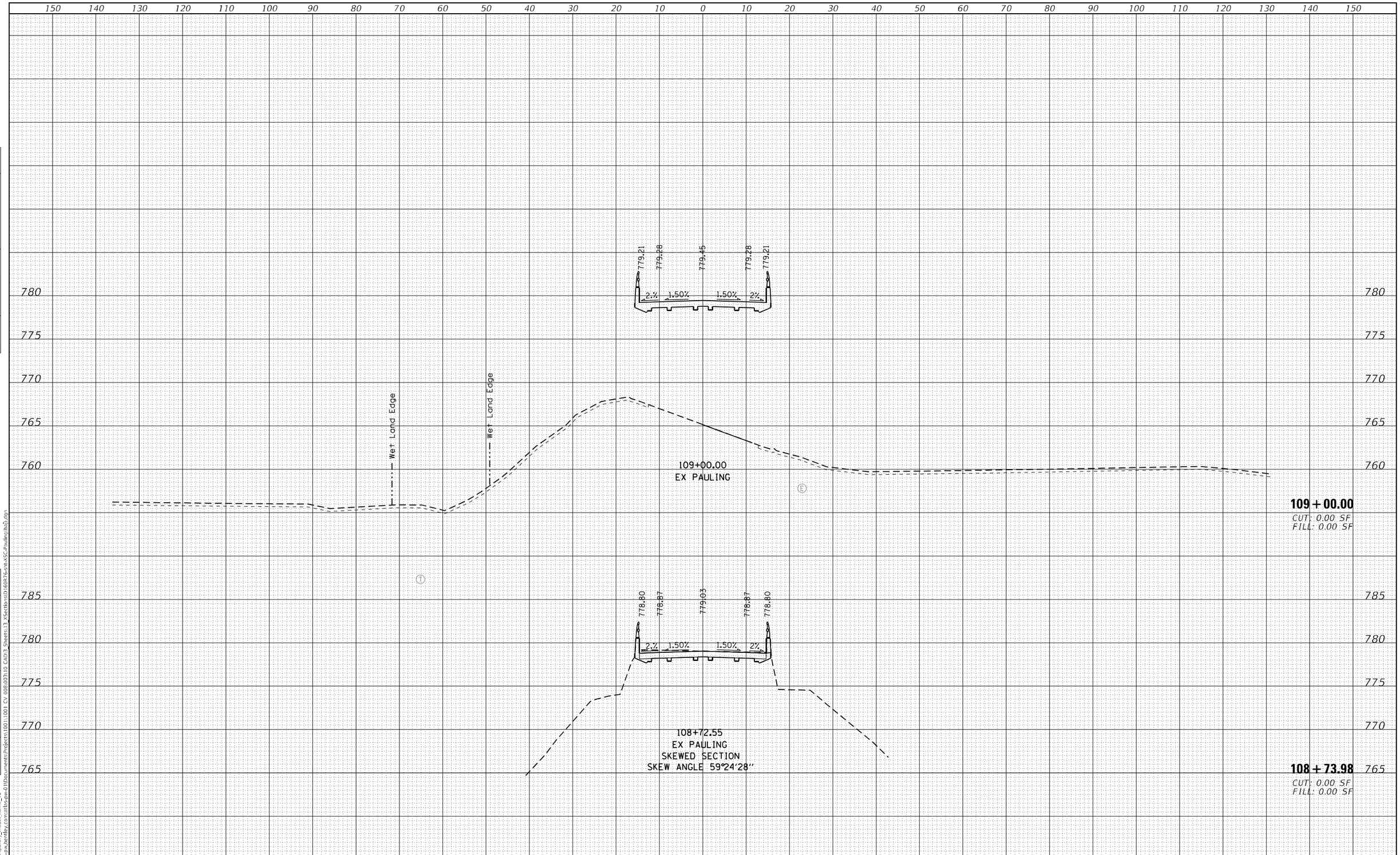

FINAL SURVEY	BY	DATE
SURVEYED		
PLOTTED		
TEMPLATE		
AREAS		
AREAS CHECKED		
NOTE BOOK		
NO.		

ORIGINAL SURVEY	BY	DATE
SURVEYED		
PLOTTED		
TEMPLATE		
AREAS		
AREAS CHECKED		
NOTE BOOK		
NO.		

MODEL: XS_SHEET_temporary_model_name_10
FILE NAME: pw:\\atlas-pw.bentley.com:atlas-pw-01\Documents\Projects\100110001 CV 008\003\10 CAD\3 Sheets\13 XSections\160R76-Int-XSC-Pauling(ba).dgn

ATLAS ENGINEERING GROUP, LTD.

USER NAME = cpujari	DESIGNED - BAJ	REVISED -	
	DRAWN - BAJ	REVISED -	
PLOT SCALE = 20.0000 ' / in.	CHECKED - BA	REVISED -	
PLOT DATE = 3/7/2025	DATE - 03/06/2024	REVISED -	

STATE OF ILLINOIS
DEPARTMENT OF TRANSPORTATION

CROSS SECTIONS
I-57 AT PAULING ROAD

SCALE: | SHEET 10 OF 24 SHEETS | STA. 108+73.98 TO STA. 109+00.00

F.A.I. RTE.	SECTION	COUNTY	TOTAL SHEETS	SHEET NO.
57	99-1HB-2-BR	WILL	133	110

CONTRACT NO. 60R76

ILLINOIS | FED. AID PROJECT

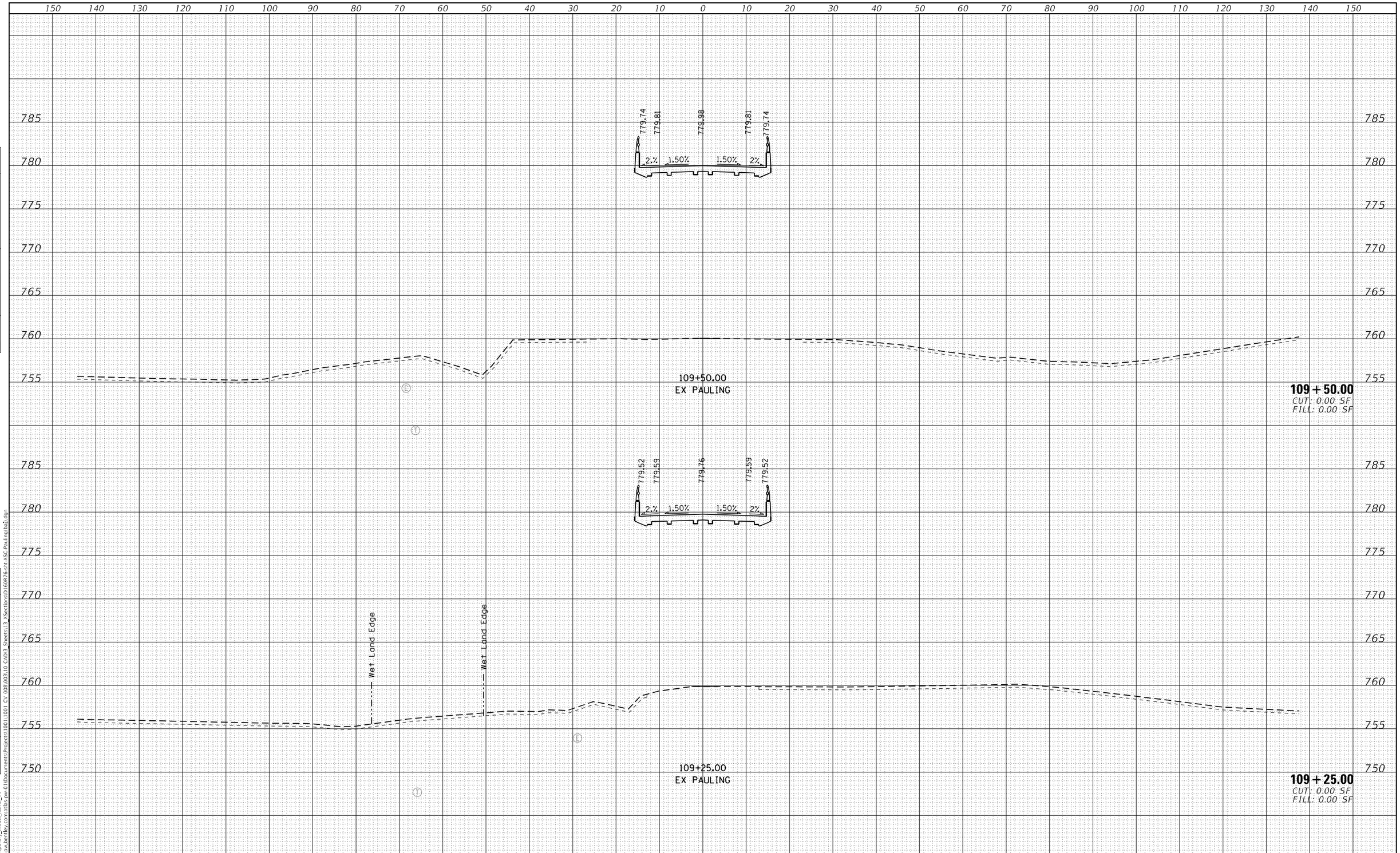

FINAL SURVEY	BY	DATE
SURVEYED		
PLOTTED		
TEMPLATE		
AREAS		
AREAS CHECKED		
NOTE BOOK NO.		

ORIGINAL SURVEY	BY	DATE
SURVEYED		
PLOTTED		
TEMPLATE		
AREAS		
AREAS CHECKED		
NOTE BOOK NO.		

MODEL: XS_SHEET_temporary_model_name_1_1
FILE NAME: pw:\\atlas-pw.bentley.com:atlas-pw-01\Documents\Projects\100_1\001 CV 008\003\10 CADD\3 Sheets\13 XSections\D160R76-crit-XSC-Pauling(ba).dgn

ATLAS ENGINEERING GROUP, LTD.

USER NAME = cpujari	DESIGNED - BAJ	REVISED -
	DRAWN - BAJ	REVISED -
PLOT SCALE = 20.0000 ' / in.	CHECKED - BA	REVISED -
PLOT DATE = 3/7/2025	DATE - 03/06/2024	REVISED -

STATE OF ILLINOIS
DEPARTMENT OF TRANSPORTATION

CROSS SECTIONS
I-57 AT PAULING ROAD

SCALE: | SHEET 11 OF 24 SHEETS | STA. 109+25.00 TO STA. 109+50.00

F.A.I. RTE.	SECTION	COUNTY	TOTAL SHEETS	SHEET NO.
57	99-1HB-2-BR	WILL	133	111

CONTRACT NO. 60R76

ILLINOIS | FED. AID PROJECT

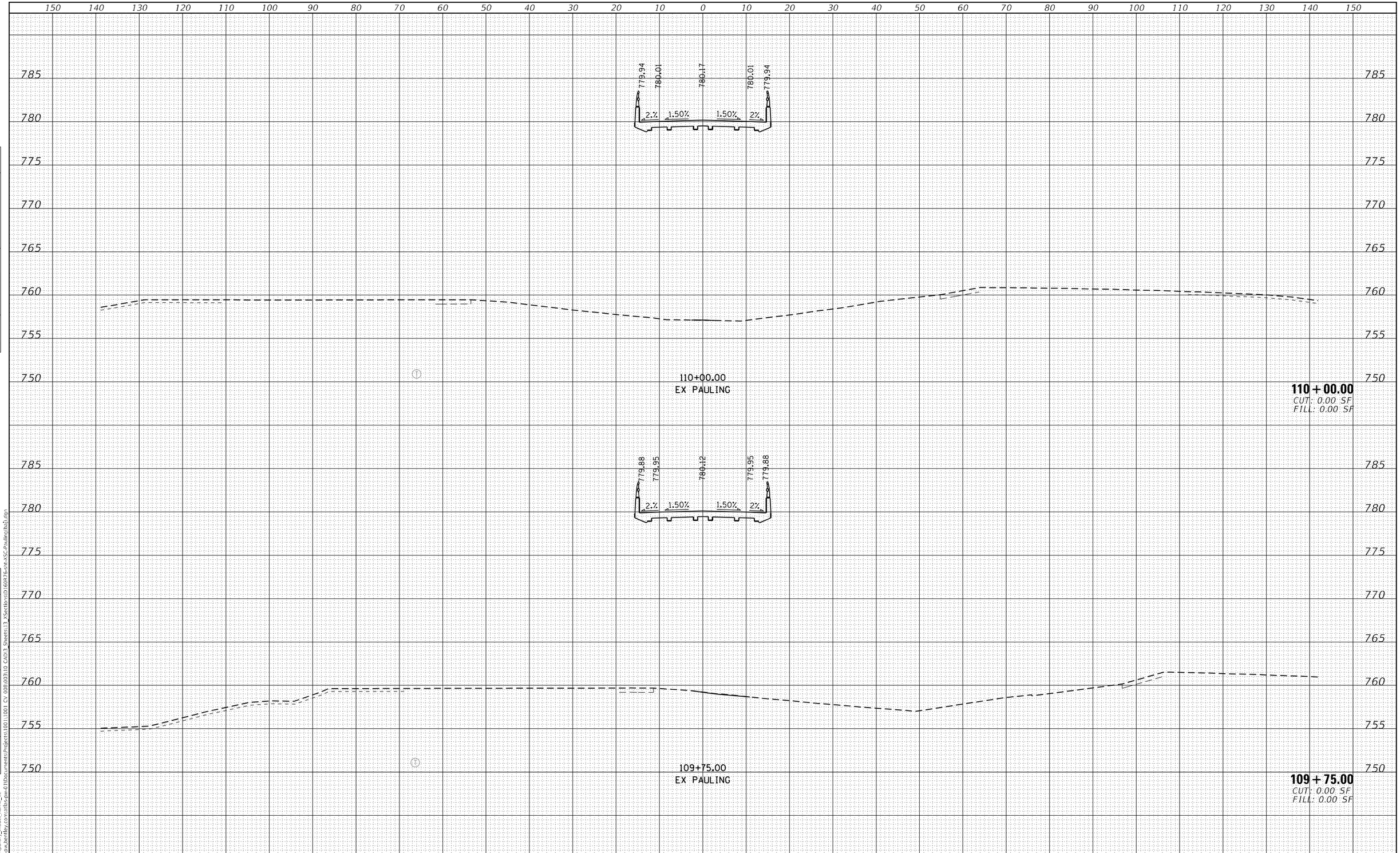

FINAL SURVEY	BY	DATE
SURVEYED		
PLOTTED		
TEMPLATE		
AREAS		
AREAS CHECKED		
NOTE BOOK		
NO.		

ORIGINAL SURVEY	BY	DATE
SURVEYED		
PLOTTED		
TEMPLATE		
AREAS		
AREAS CHECKED		
NOTE BOOK		
NO.		

MODEL: XS_SHEET_perpendicular_model_name_12
FILE NAME: pw:\\atlas-pw.bentley.com:atlas-pw-01\Documents\Projects\100\1001 CV 008\03\10 CAD\3 Sheets\13_XSections\D160R76-int-XSC-Pauling(ba).dgn

AEG ATLAS ENGINEERING GROUP, LTD.

USER NAME = cpujari	DESIGNED - BAJ	REVISED -
	DRAWN - BAJ	REVISED -
PLOT SCALE = 20.0000 ' / in.	CHECKED - BA	REVISED -
PLOT DATE = 3/7/2025	DATE - 03/06/2024	REVISED -

STATE OF ILLINOIS
DEPARTMENT OF TRANSPORTATION

CROSS SECTIONS
I-57 AT PAULING ROAD

SCALE: | SHEET 12 OF 24 SHEETS | STA. 109+75.00 TO STA. 110+00.00

F.A.I. RTE.	SECTION	COUNTY	TOTAL SHEETS	SHEET NO.
57	99-1HB-2-BR	WILL	133	112
		CONTRACT NO. 60R76		
		ILLINOIS	FED. AID PROJECT	

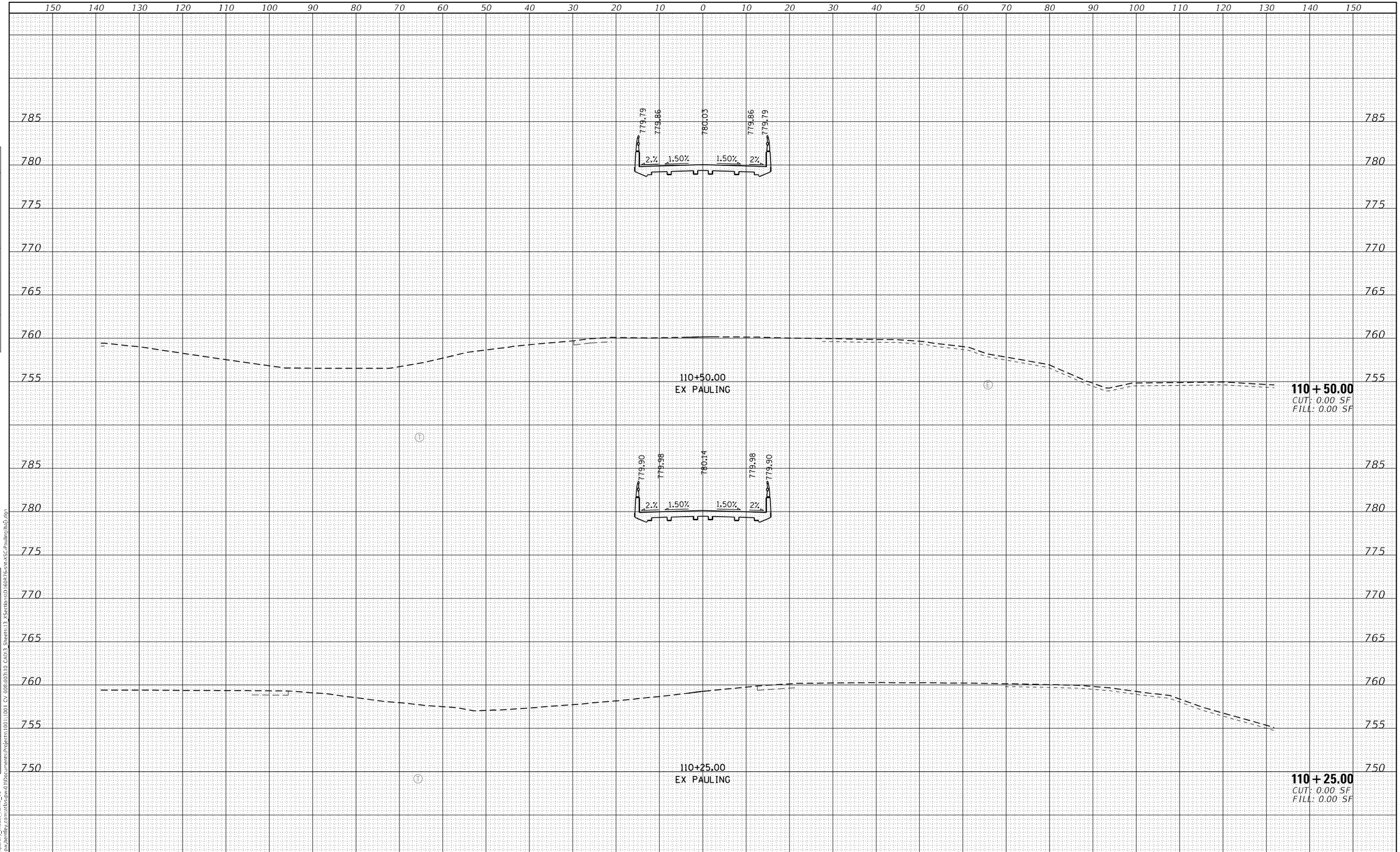

FINAL SURVEY	BY	DATE
SURVEYED		
PLOTTED		
TEMPLATE		
AREAS		
AREAS CHECKED		
NOTE BOOK		
NO.		

ORIGINAL SURVEY	BY	DATE
SURVEYED		
PLOTTED		
TEMPLATE		
AREAS		
AREAS CHECKED		
NOTE BOOK		
NO.		

MODEL: XS_SHEET_perpendicular_model_name_13
FILE NAME: pw:\\atlas-pw.bentley.com:atlas-pw-01\Documents\Projects\100\1001 CV 008\003\10 CAD\3 Sheets\13_XSections\D160R76-int-XSC-Pauling(ba).dgn

AEG ATLAS ENGINEERING GROUP, LTD.

USER NAME = cpujari	DESIGNED - BAJ	REVISED -
	DRAWN - BAJ	REVISED -
PLOT SCALE = 20.0000 ' / in.	CHECKED - BA	REVISED -
PLOT DATE = 3/7/2025	DATE - 03/06/2024	REVISED -

STATE OF ILLINOIS
DEPARTMENT OF TRANSPORTATION

CROSS SECTIONS
I-57 AT PAULING ROAD

SCALE: | SHEET 13 OF 24 SHEETS | STA. 110+25.00 TO STA. 110+50.00

F.A.I. RTE.	SECTION	COUNTY	TOTAL SHEETS	SHEET NO.
57	99-1HB-2-BR	WILL	133	113
		CONTRACT NO. 60R76		
		ILLINOIS	FED. AID PROJECT	

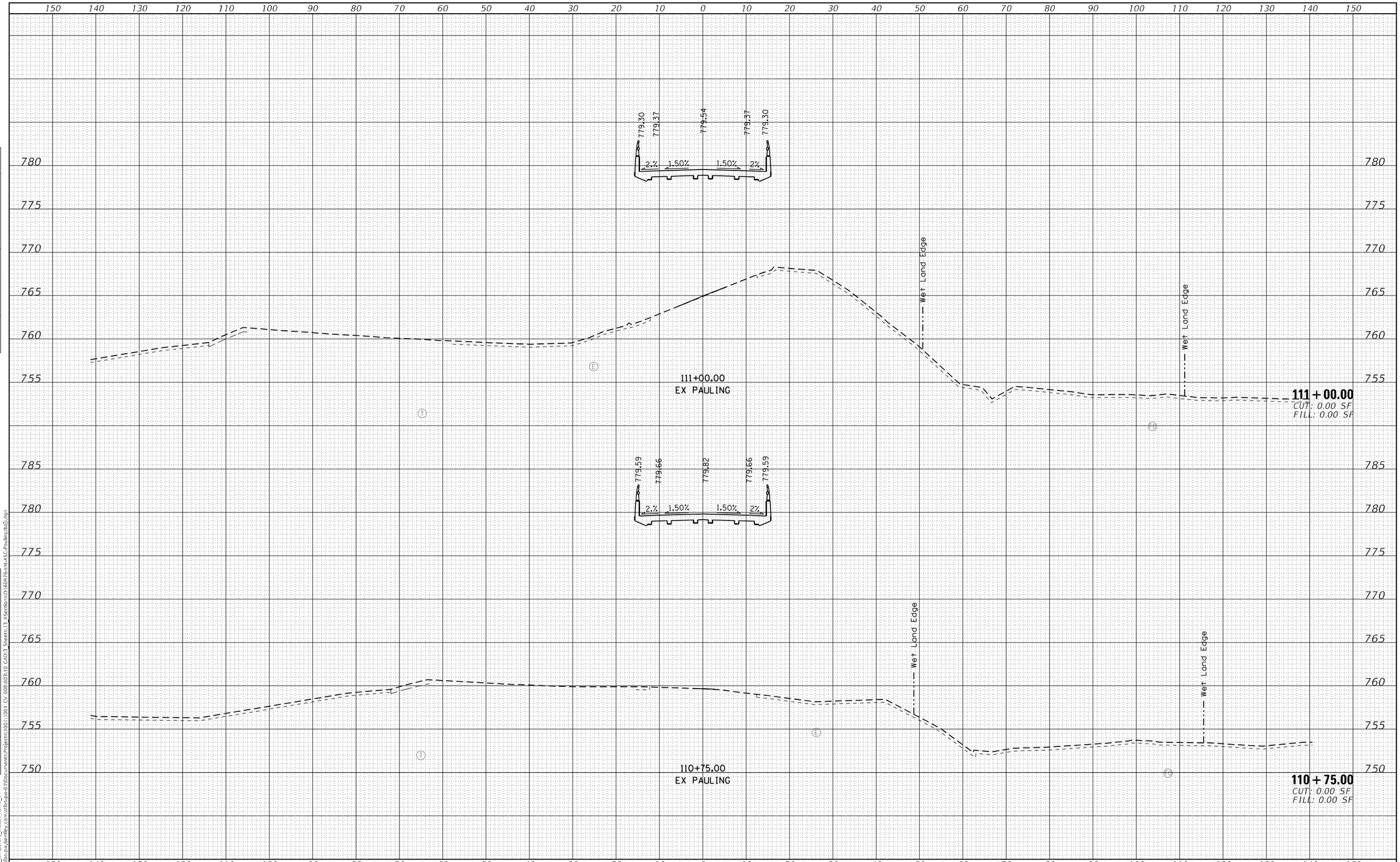

FINAL SURVEY	BY	DATE
SURVEYED		
PLOTTED		
TEMPLATE		
AREAS		
AREAS CHECKED		
NOTE BOOK		
NO.		

ORIGINAL SURVEY	BY	DATE
SURVEYED		
PLOTTED		
TEMPLATE		
AREAS		
AREAS CHECKED		
NOTE BOOK		
NO.		

MODEL: XS_SHEET_temporary_model name_14
FILE NAME: pw:\\atlas-pw.bentley.com:atlas-pw-01\Documents\Projects\100\1001 CV 008\003\10 CADD\3 Sheets\13 XSections\D160R76-crit-XSC-Pauling(ba).dgn

AEG ATLAS ENGINEERING GROUP, LTD.

USER NAME = cpujari	DESIGNED - BAJ	REVISED -
	DRAWN - BAJ	REVISED -
PLOT SCALE = 20.0000 ' / in.	CHECKED - BA	REVISED -
PLOT DATE = 3/7/2025	DATE - 03/06/2024	REVISED -

STATE OF ILLINOIS
DEPARTMENT OF TRANSPORTATION

CROSS SECTIONS
I-57 AT PAULING ROAD

SCALE: | SHEET 14 OF 24 SHEETS | STA. 110+75.00 TO STA. 111+00.00

F.A.I. RTE.	SECTION	COUNTY	TOTAL SHEETS	SHEET NO.
57	99-1HB-2-BR	WILL	133	114
		CONTRACT NO. 60R76		
		ILLINOIS	FED. AID PROJECT	

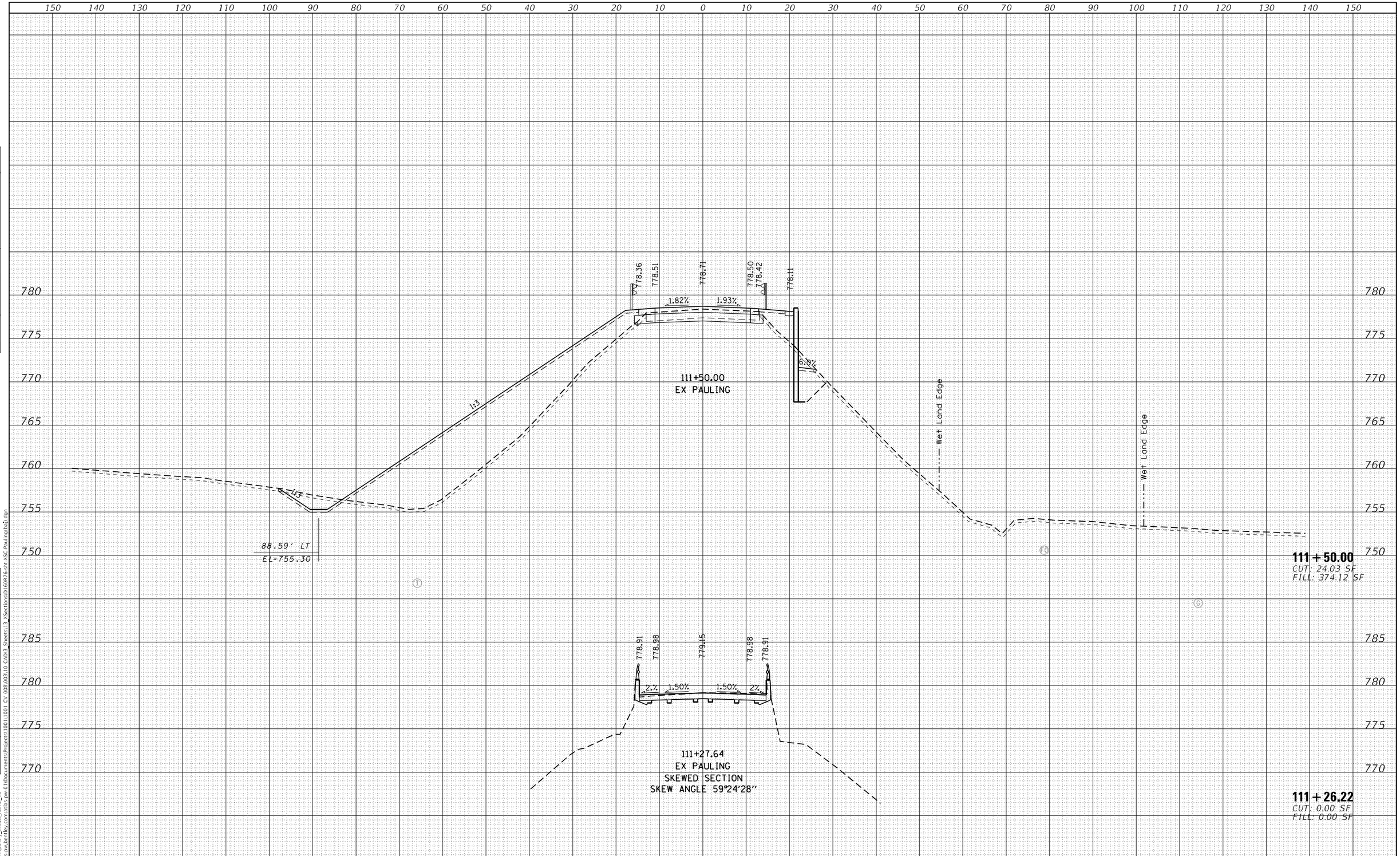

FINAL SURVEY	BY	DATE
SURVEYED		
PLOTTED		
TEMPLATE		
AREAS		
AREAS CHECKED		
NOTE BOOK NO.		

ORIGINAL SURVEY	BY	DATE
SURVEYED		
PLOTTED		
TEMPLATE		
AREAS		
AREAS CHECKED		
NOTE BOOK NO.		

MODEL: XS_SHEET_temporary_model_name_15
FILE NAME: pw:\\atlas-pw.bentley.com:atlas-pw-01\Documents\Projects\1001\1001 CV 008\003\10 CAD\3_Sheets\13_XSections\D160R76-sht-XSC-Pauling(ba).dgn

AEG ATLAS ENGINEERING GROUP, LTD.

USER NAME = cpujari	DESIGNED - BAJ	REVISED -	
	DRAWN - BAJ	REVISED -	
PLOT SCALE = 20.0000 ' / in.	CHECKED - BA	REVISED -	
PLOT DATE = 3/7/2025	DATE - 03/06/2024	REVISED -	

STATE OF ILLINOIS
DEPARTMENT OF TRANSPORTATION

CROSS SECTIONS
I-57 AT PAULING ROAD

SCALE: | SHEET 15 OF 24 SHEETS | STA. 111+26.22 TO STA. 111+50.00

F.A.I. RTE.	SECTION	COUNTY	TOTAL SHEETS	SHEET NO.
57	99-1HB-2-BR	WILL	133	115
		CONTRACT NO. 60R76		
		ILLINOIS	FED. AID PROJECT	

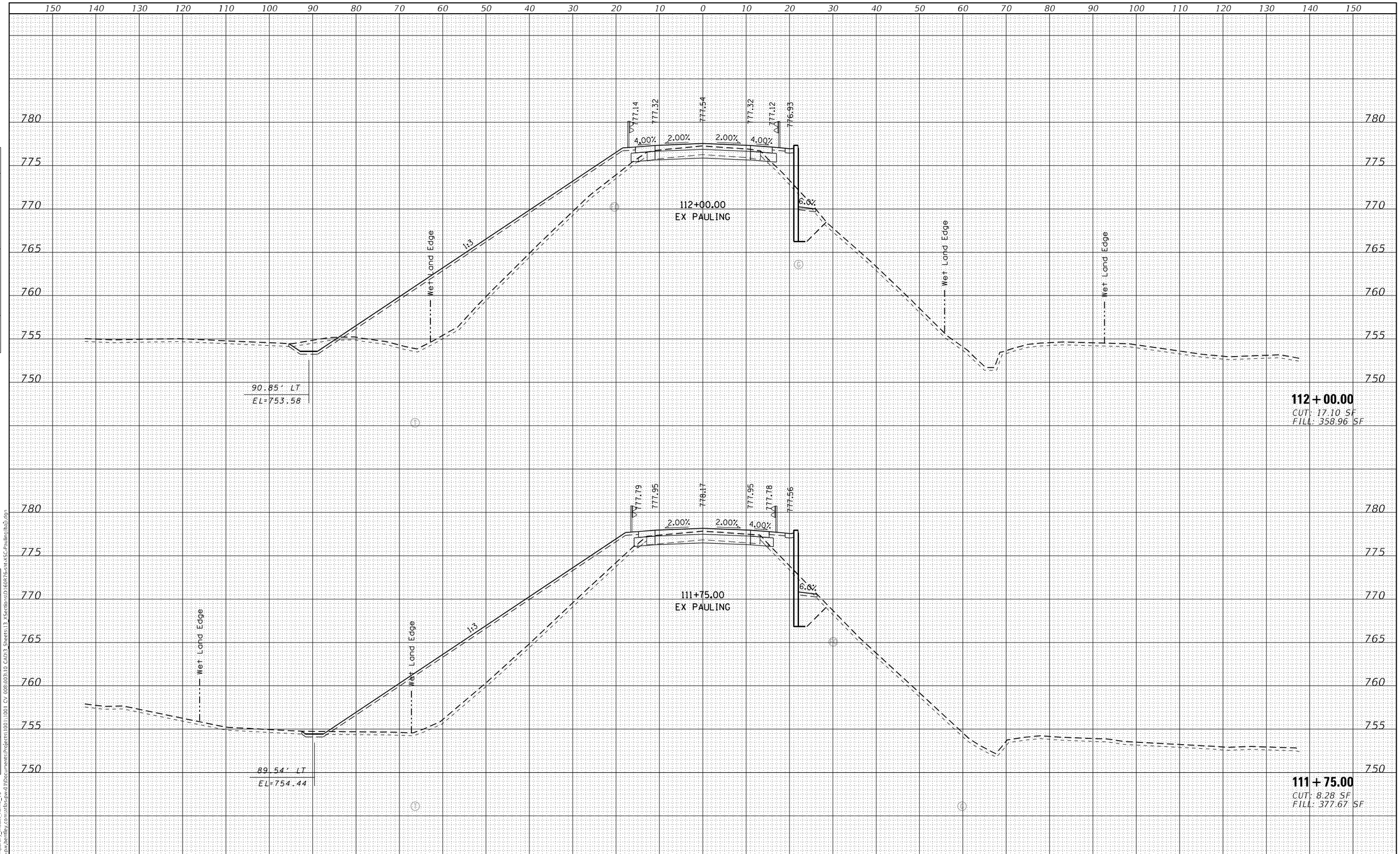

FINAL SURVEY		BY	DATE
NOTE BOOK	SURVEYED		
	PLOTTED		
	TEMPLATE		
	AREAS		
	AREAS CHECKED		
NO.			

ORIGINAL SURVEY		BY	DATE
NOTE BOOK	SURVEYED		
	PLOTTED		
	TEMPLATE		
	AREAS		
	AREAS CHECKED		
NO.			

MODEL: XS_SHEET_temporary_model_name_16
FILE NAME: pw:\\atlas-pw.bentley.com:atlas-pw-01\Documents\Projects\100\1001 CV 008\003\10 CAD\3 Sheets\13 2Sections\D160R76-sht-XSC-Pauling(bal).dgn

AEG ATLAS ENGINEERING GROUP, LTD.

USER NAME = cpujari	DESIGNED - BAJ	REVISED -
	DRAWN - BAJ	REVISED -
PLOT SCALE = 20.0000 ' / in.	CHECKED - BA	REVISED -
PLOT DATE = 3/7/2025	DATE - 03/06/2024	REVISED -

STATE OF ILLINOIS
DEPARTMENT OF TRANSPORTATION

CROSS SECTIONS
I-57 AT PAULING ROAD

SCALE: | SHEET 16 OF 24 SHEETS | STA. 111+75.00 TO STA. 112+00.00

F.A.I. RTE.	SECTION	COUNTY	TOTAL SHEETS	SHEET NO.
57	99-1HB-2-BR	WILL	133	116
		CONTRACT NO. 60R76		
		ILLINOIS	FED. AID PROJECT	

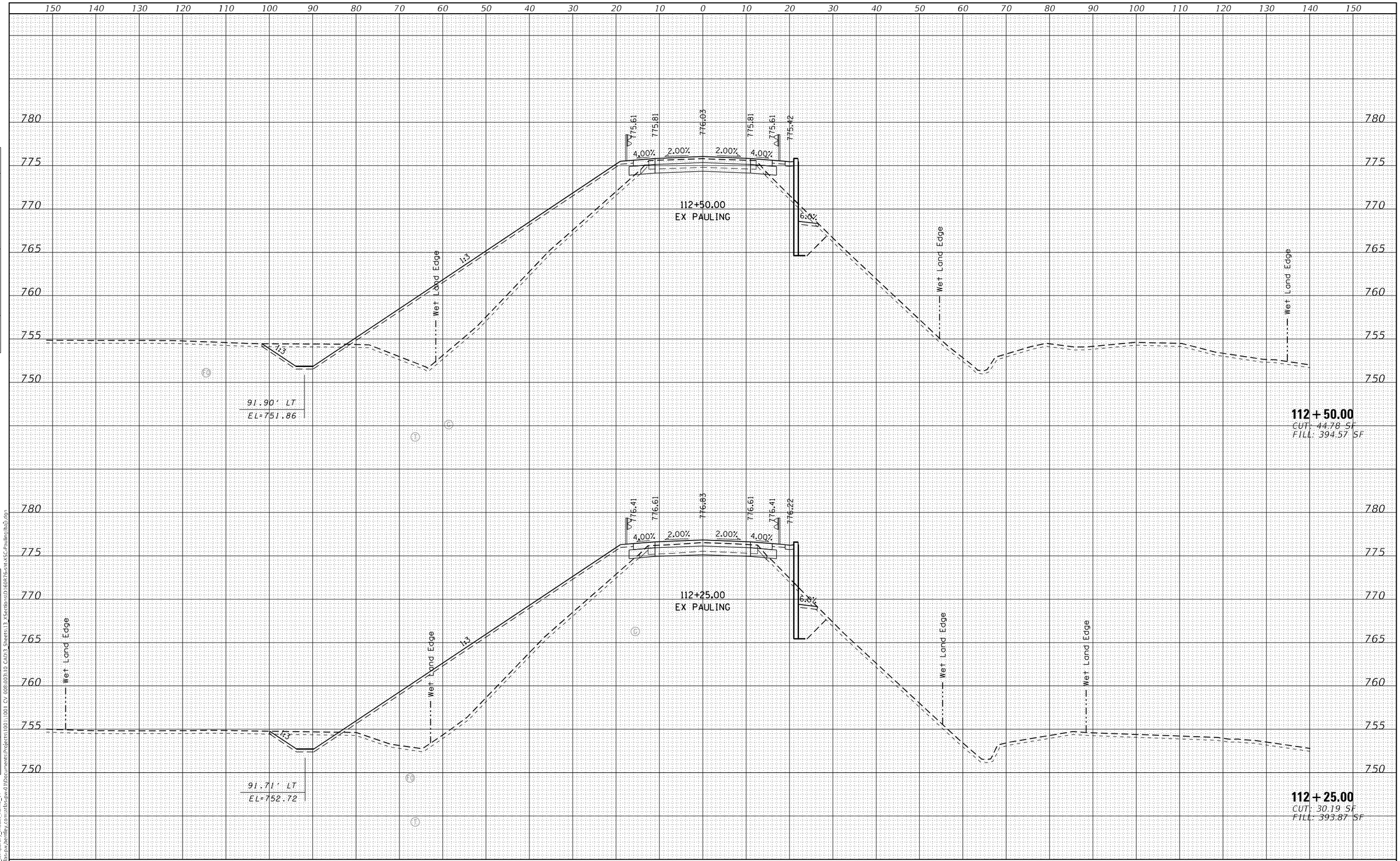

FINAL SURVEY	BY	DATE
SURVEYED		
PLOTTED		
TEMPLATE		
AREAS		
AREAS CHECKED		
NOTE BOOK		
NO.		

ORIGINAL SURVEY	BY	DATE
SURVEYED		
PLOTTED		
TEMPLATE		
AREAS		
AREAS CHECKED		
NOTE BOOK		
NO.		

MODEL: XS_SHEET_temporary_model_name_17
FILE NAME: pw:\\atlas-pw.bentley.com:atlas-pw-01\Documents\Projects\100\1001 CV 008\003\10 CADD\3 Sheets\13 2Section\D160R76-sht-XSC-Pauling(bal).dgn

AEG ATLAS ENGINEERING GROUP, LTD.

USER NAME = cpujari	DESIGNED - BAJ	REVISED -
	DRAWN - BAJ	REVISED -
PLOT SCALE = 20.0000 ' / in.	CHECKED - BA	REVISED -
PLOT DATE = 3/7/2025	DATE - 03/06/2024	REVISED -

STATE OF ILLINOIS
DEPARTMENT OF TRANSPORTATION

CROSS SECTIONS
I-57 AT PAULING ROAD

SCALE: | SHEET 17 OF 24 SHEETS | STA. 112+25.00 TO STA. 112+50.00

F.A.I. RTE.	SECTION	COUNTY	TOTAL SHEETS	SHEET NO.
57	99-1HB-2-BR	WILL	133	117

CONTRACT NO. 60R76

ILLINOIS | FED. AID PROJECT

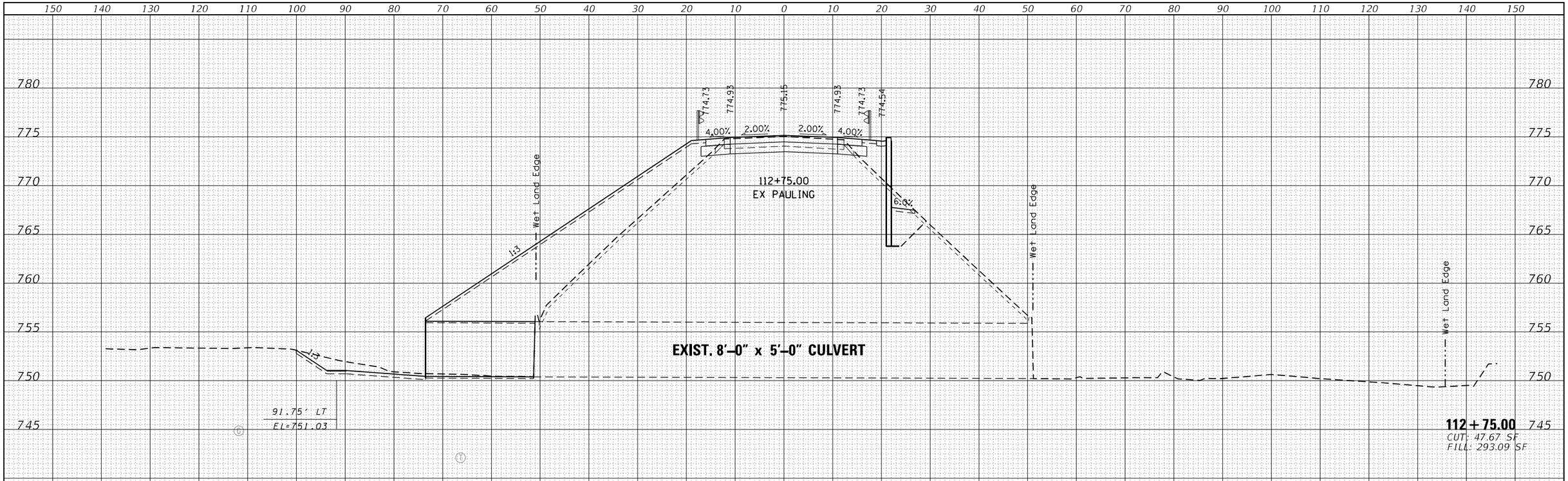

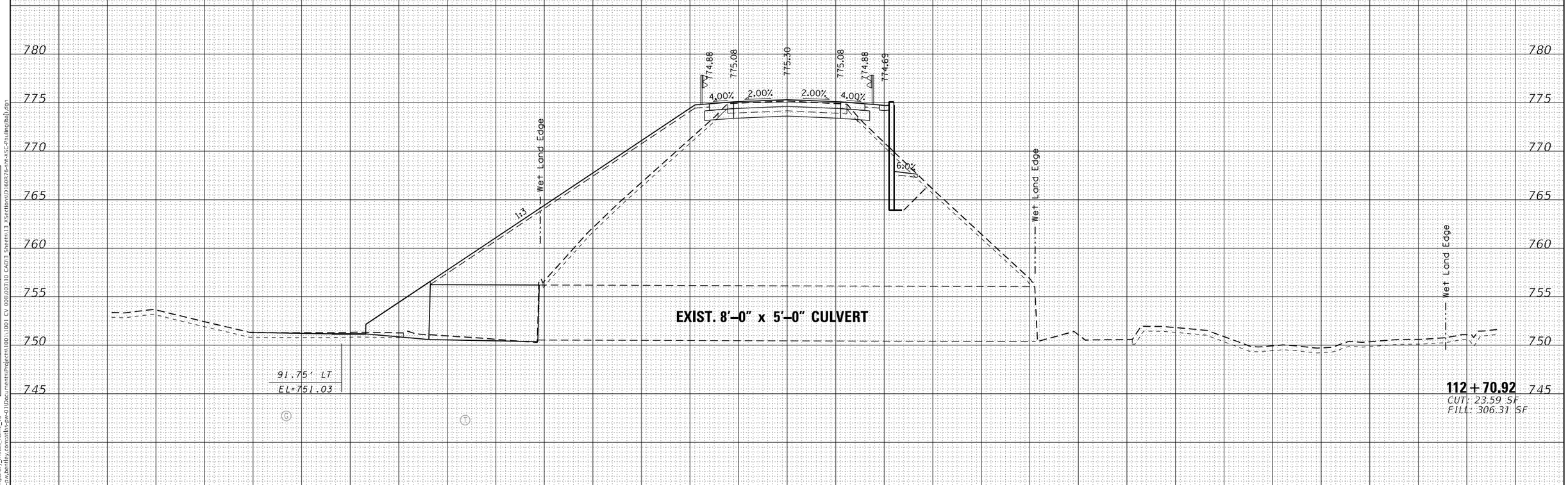

FINAL SURVEY	BY	DATE
SURVEYED		
PLOTTED		
TEMPLATE		
AREAS		
AREAS CHECKED		
NOTE BOOK		
NO.		

ORIGINAL SURVEY	BY	DATE
SURVEYED		
PLOTTED		
TEMPLATE		
AREAS		
AREAS CHECKED		
NOTE BOOK		
NO.		

MODEL: XS_SHEET_temporary_model name_18
FILE NAME: pw:\\atlas-pw.bentley.com:atlas-pw-01\Documents\Projects\100\1001 CV 008\03\10 CAD\3 Sheets\13 XSections\D160R76-nt-XSC-Pauling(ba).dgn

AEG ATLAS ENGINEERING GROUP, LTD.

USER NAME = cpujari	DESIGNED - BAJ	REVISED -
	DRAWN - BAJ	REVISED -
PLOT SCALE = 20.0000 ' / in.	CHECKED - BA	REVISED -
PLOT DATE = 3/7/2025	DATE - 03/06/2024	REVISED -

STATE OF ILLINOIS
DEPARTMENT OF TRANSPORTATION

CROSS SECTIONS
I-57 AT PAULING ROAD

SCALE: | SHEET 18 OF 24 SHEETS | STA. 112+70.92 TO STA. 112+75.00

F.A.I. RTE.	SECTION	COUNTY	TOTAL SHEETS	SHEET NO.
57	99-1HB-2-BR	WILL	133	118
		CONTRACT NO. 60R76		
		ILLINOIS	FED. AID PROJECT	

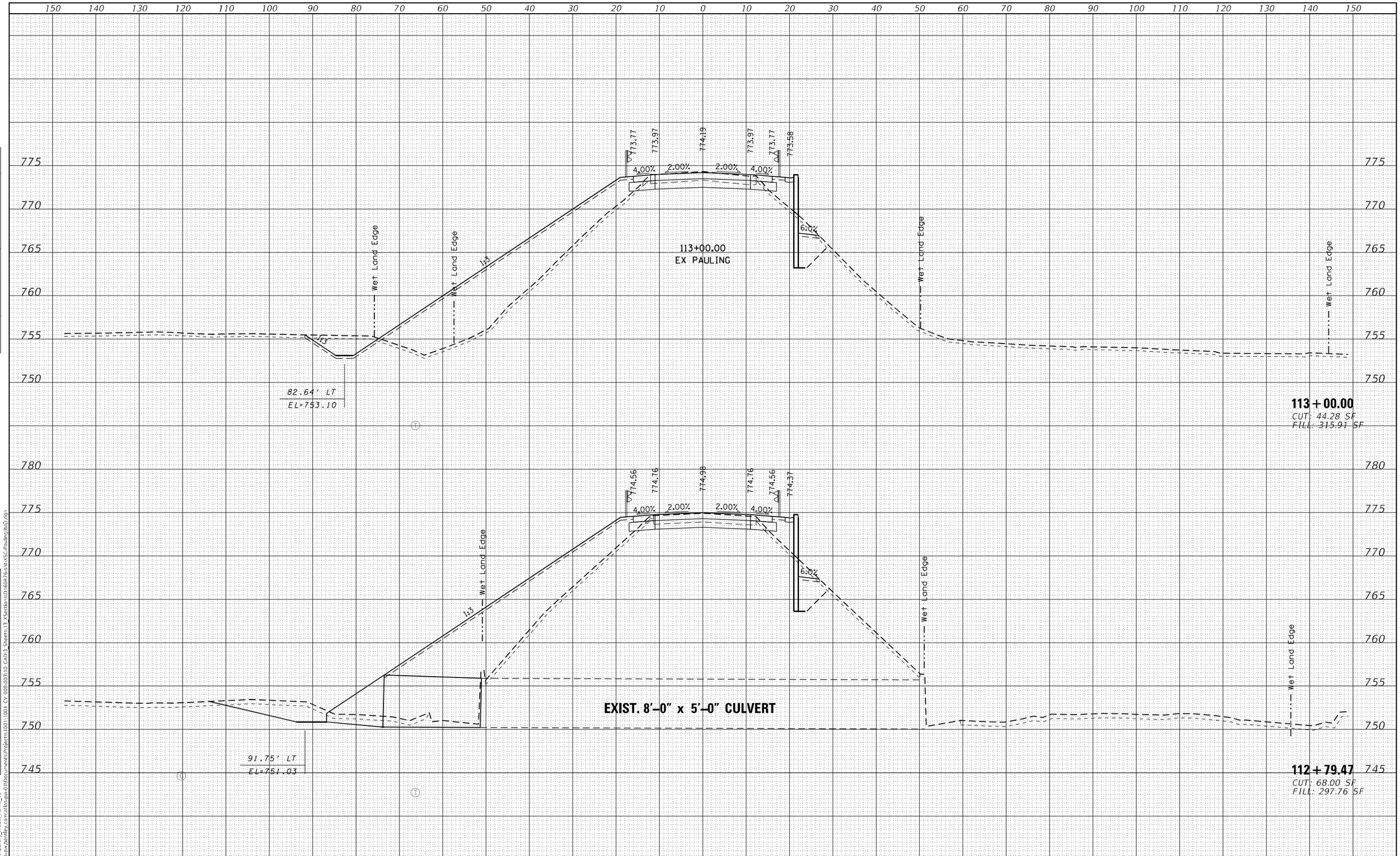

FINAL SURVEY	BY	DATE
SURVEYED		
PLOTTED		
TEMPLATE		
AREAS		
AREAS CHECKED		
NOTE BOOK		
NO.		

ORIGINAL SURVEY	BY	DATE
SURVEYED		
PLOTTED		
TEMPLATE		
AREAS		
AREAS CHECKED		
NOTE BOOK		
NO.		

MODEL: XS_SHEET_temporary_model name_19
FILE NAME: pw:\\atlas-pw.bentley.com:atlas-pw-01\Documents\Projects\100\1001 CV 008\003\10 CADD\3 Sheets\13 XSections\D160R76-sht-XSC-Pauling(ba).dgn

AEG ATLAS ENGINEERING GROUP, LTD.

USER NAME = cpujari	DESIGNED - BAJ	REVISED -
	DRAWN - BAJ	REVISED -
PLOT SCALE = 20.0000 ' / in.	CHECKED - BA	REVISED -
PLOT DATE = 3/7/2025	DATE - 03/06/2024	REVISED -

STATE OF ILLINOIS
DEPARTMENT OF TRANSPORTATION

CROSS SECTIONS
I-57 AT PAULING ROAD

SCALE: | SHEET 19 OF 24 SHEETS | STA. 112+79.47 TO STA. 113+00.00

F.A.I. RTE.	SECTION	COUNTY	TOTAL SHEETS	SHEET NO.
57	99-1HB-2-BR	WILL	133	119
		CONTRACT NO. 60R76		
		ILLINOIS	FED. AID PROJECT	

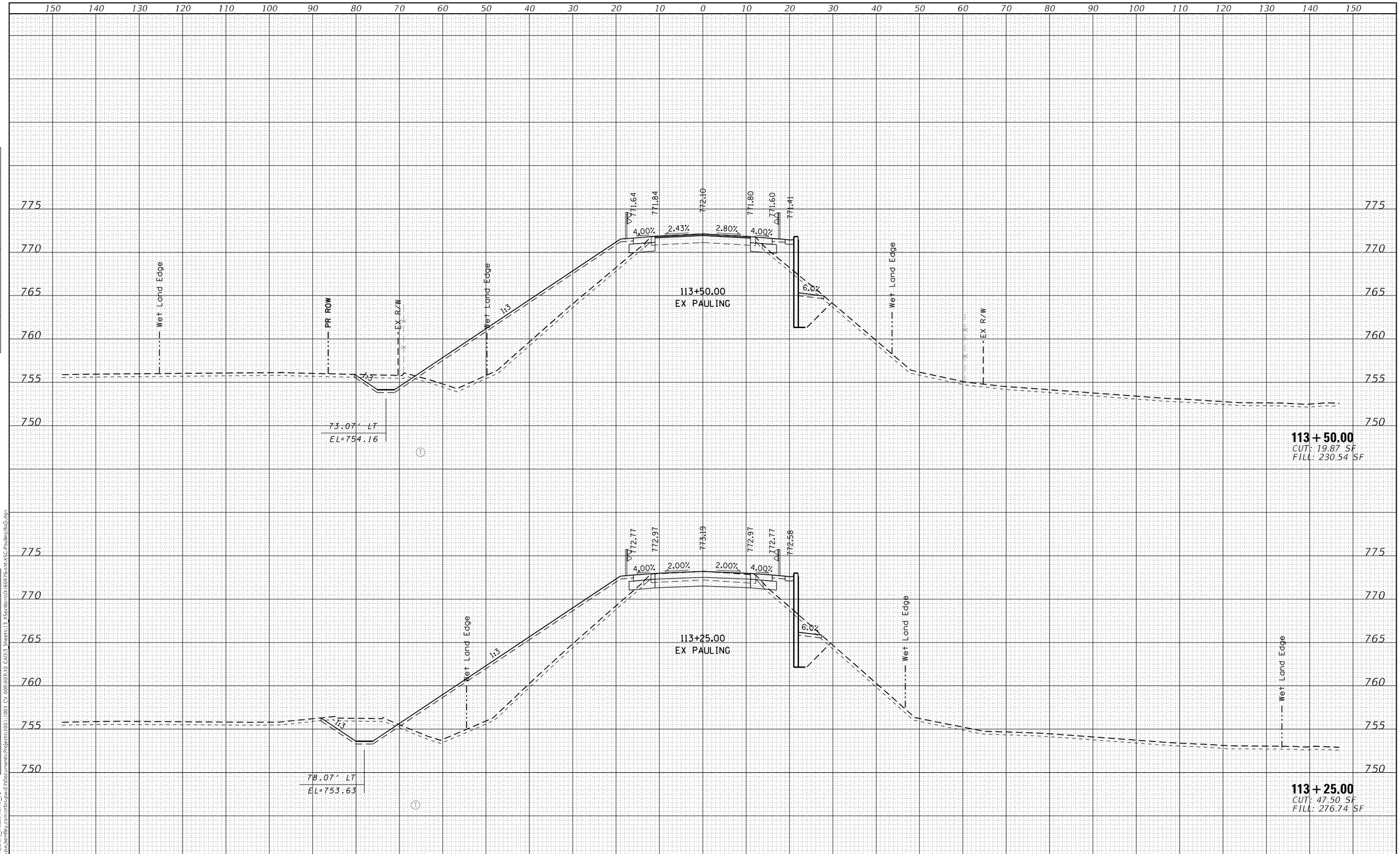

FINAL SURVEY		BY	DATE
	SURVEYED		
	PLOTTED		
	TEMPLATE		
NOTE BOOK	AREAS		
	AREAS CHECKED		
NO.			

ORIGINAL SURVEY		BY	DATE
	SURVEYED		
	PLOTTED		
	TEMPLATE		
NOTE BOOK	AREAS		
	AREAS CHECKED		
NO.			

MODEL: XS_SHEET_temporary_model_name_20
FILE NAME: pw:\\atlas-pw.bentley.com:atlas-pw-01\Documents\Projects\100\1001 CV 008\003\10 CAD\3 Sheets\13 2Sections\D160R76-sht-XSC-Pauling(bal).dgn

AEG ATLAS ENGINEERING GROUP, LTD.

USER NAME = cpujari	DESIGNED - BAJ	REVISED -
	DRAWN - BAJ	REVISED -
PLOT SCALE = 20.0000 ' / in.	CHECKED - BA	REVISED -
PLOT DATE = 3/7/2025	DATE - 03/06/2024	REVISED -

STATE OF ILLINOIS
DEPARTMENT OF TRANSPORTATION

CROSS SECTIONS
I-57 AT PAULING ROAD

SCALE: | SHEET 20 OF 24 SHEETS | STA. 113+25.00 TO STA. 113+50.00

F.A.I. RTE.	SECTION	COUNTY	TOTAL SHEETS	SHEET NO.
57	99-1HB-2-BR	WILL	133	120
		CONTRACT NO. 60R76		
		ILLINOIS	FED. AID PROJECT	

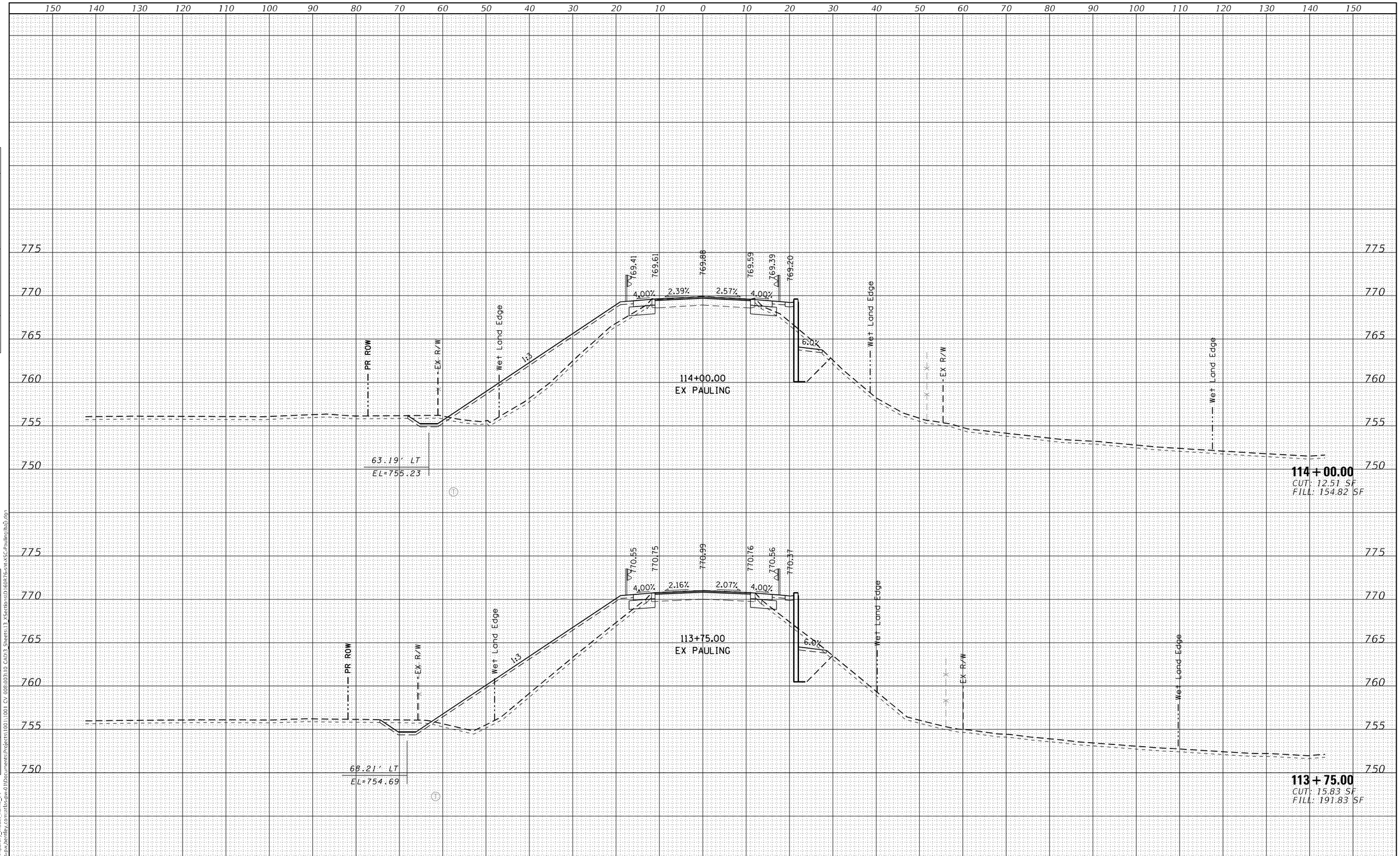

FINAL SURVEY		BY	DATE
SURVEYED			
PLOTTED			
TEMPLATE			
AREAS			
AREAS CHECKED			
NOTE BOOK NO.			

ORIGINAL SURVEY		BY	DATE
SURVEYED			
PLOTTED			
TEMPLATE			
AREAS			
AREAS CHECKED			
NOTE BOOK NO.			

MODEL: XS_SHEET_temporary_model_name_21
FILE NAME: pw:\\atlas-pw.bentley.com:atlas-pw-01\Documents\Projects\1001\1001 CV 008\003\10 CAD\3_Sheets\13_XSections\D16OR76-sht-XSC-Pauling(ba).dgn

AEG ATLAS ENGINEERING GROUP, LTD.

USER NAME = cpujari	DESIGNED - BAJ	REVISED -	
	DRAWN - BAJ	REVISED -	
PLOT SCALE = 20.0000 ' / in.	CHECKED - BA	REVISED -	
PLOT DATE = 3/7/2025	DATE - 03/06/2024	REVISED -	

STATE OF ILLINOIS
DEPARTMENT OF TRANSPORTATION

CROSS SECTIONS
I-57 AT PAULING ROAD

SCALE: | SHEET 21 OF 24 SHEETS | STA. 113+75.00 TO STA. 114+00.00

F.A.I. RTE.	SECTION	COUNTY	TOTAL SHEETS	SHEET NO.
57	99-1HB-2-BR	WILL	133	121

CONTRACT NO. 60R76

ILLINOIS | FED. AID PROJECT

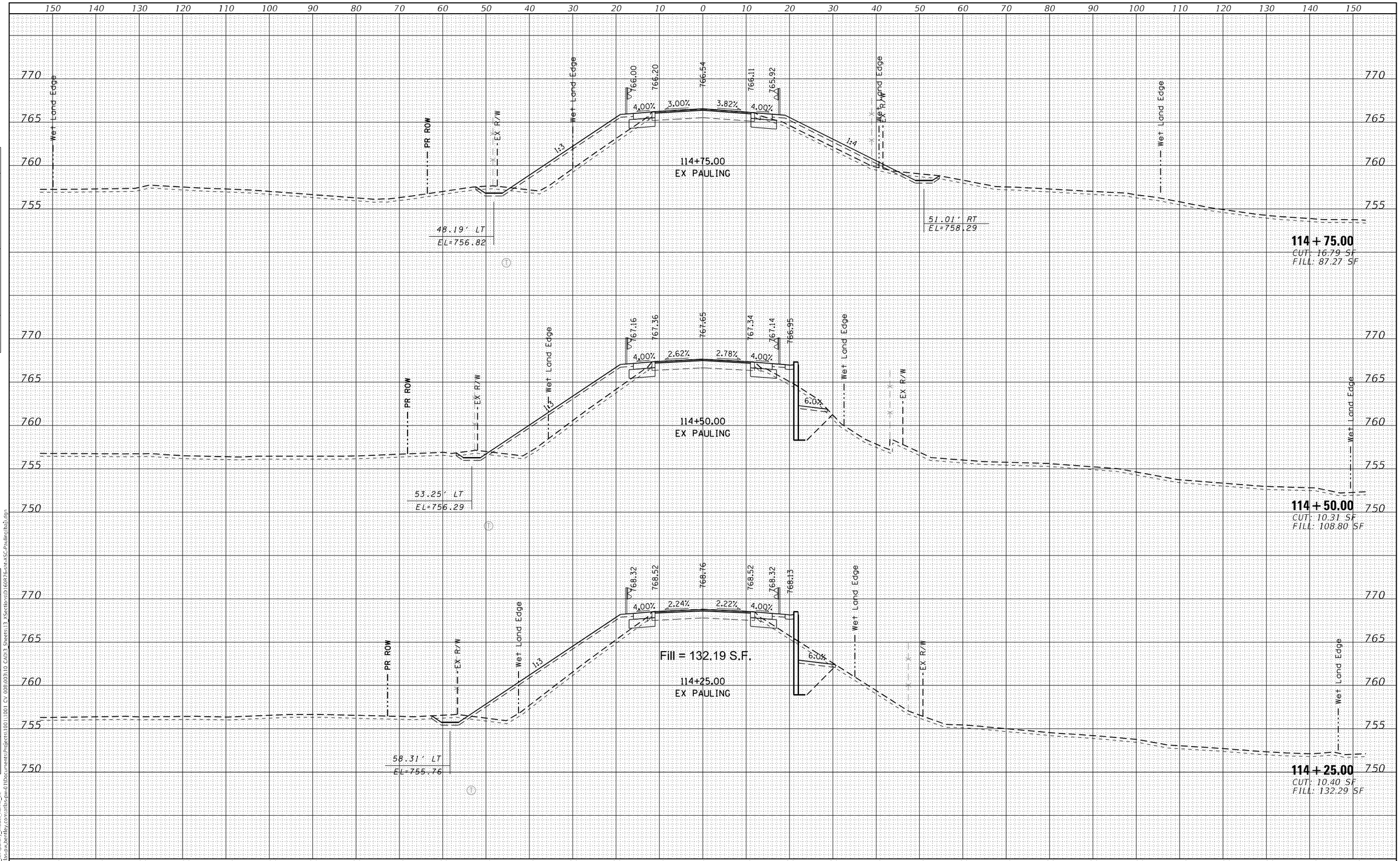

AEG ATLAS ENGINEERING GROUP, LTD.	USER NAME = cpujari	DESIGNED - BAJ	REVISED -	STATE OF ILLINOIS DEPARTMENT OF TRANSPORTATION	
		DRAWN - BAJ	REVISED -		
	PLOT SCALE = 20.0000 ' / in.	CHECKED - BA	REVISED -		
	PLOT DATE = 3/7/2025	DATE - 03/06/2024	REVISED -		

CROSS SECTIONS
I-57 AT PAULING ROAD

SCALE: | SHEET 22 OF 24 SHEETS | STA. 114+25.00 TO STA. 114+75.00

F.A.I. RTE.	SECTION	COUNTY	TOTAL SHEETS	SHEET NO.
57	99-1HB-2-BR	WILL	133	122
		CONTRACT NO. 60R76		
		ILLINOIS	FED. AID PROJECT	

FINAL SURVEY | NOTE BOOK NO. | SURVEYED | PLOTTED | TEMPLATE | AREAS | AREAS CHECKED | BY | DATE

ORIGINAL SURVEY | NOTE BOOK NO. | SURVEYED | PLOTTED | TEMPLATE | AREAS | AREAS CHECKED | BY | DATE

MODEL: XS_SHEET_temporary_model name_22
FILE NAME: pw:\\atlas-pw.bentley.com:atlas-pw-01\Documents\Projects\101\1001 CV 008.003\10 CAD\3 Sheets\13 XSections\D160R76-SH-XSC-Pauling(baj).dgn

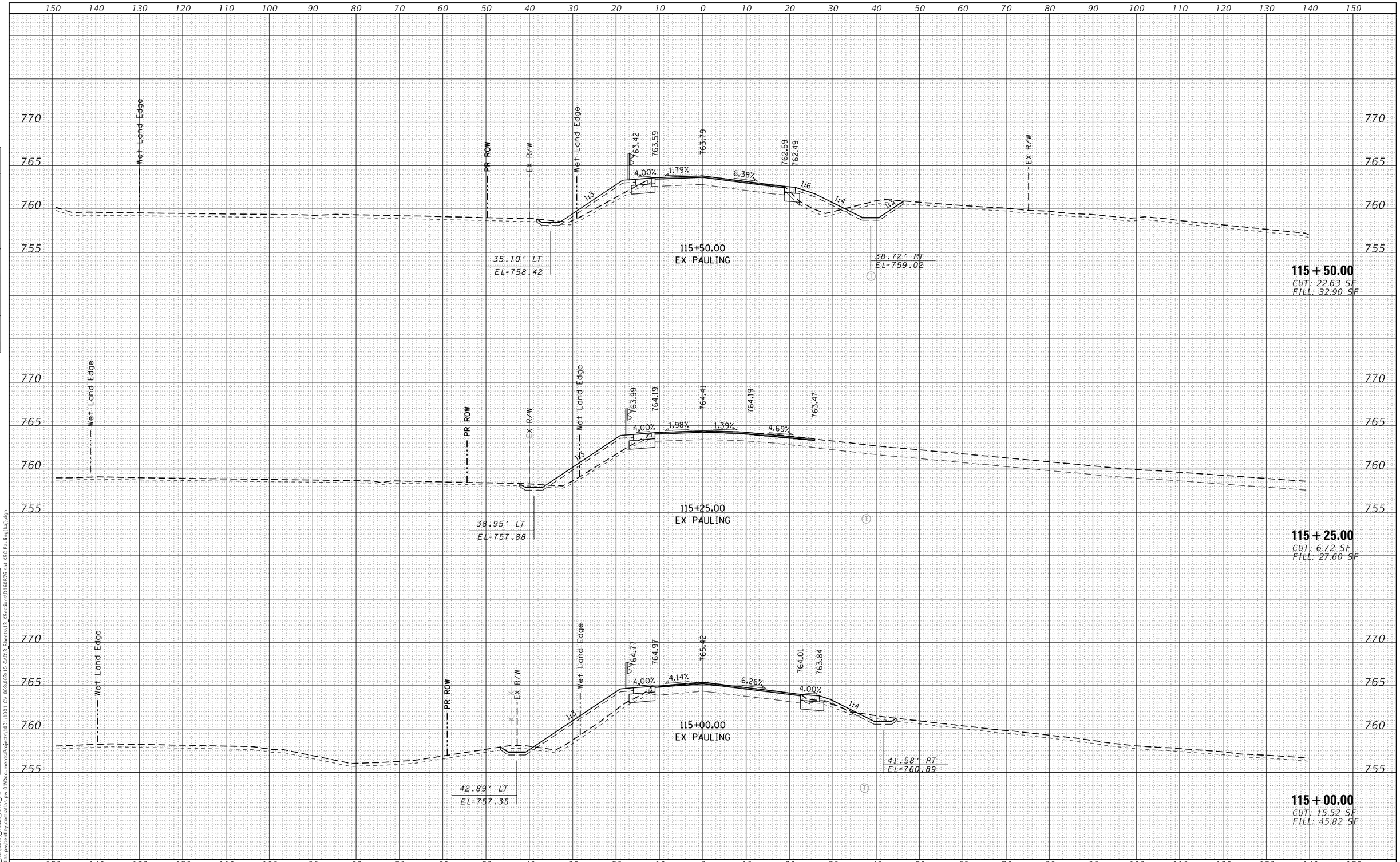

FINAL SURVEY	BY	DATE
SURVEYED		
PLOTTED		
TEMPLATE		
AREAS		
AREAS CHECKED		
NOTE BOOK		
NO.		

ORIGINAL SURVEY	BY	DATE
SURVEYED		
PLOTTED		
TEMPLATE		
AREAS		
AREAS CHECKED		
NOTE BOOK		
NO.		

MODEL: XS_SHEET_temporary_model name_23
FILE NAME: pw:\\atlas-pw.bentley.com:atlas-pw-01\Documents\Projects\100110001 CV 008\003\10 CAD\3 Sheets\13 XSections\D160R76-Int-XSC-Pauling(ba).dgn

AEG ATLAS ENGINEERING GROUP, LTD.

USER NAME = cpujari	DESIGNED - BAJ	REVISED -	
	DRAWN - BAJ	REVISED -	
PLOT SCALE = 20.0000 ' / in.	CHECKED - BA	REVISED -	
PLOT DATE = 3/7/2025	DATE - 03/06/2024	REVISED -	

STATE OF ILLINOIS
DEPARTMENT OF TRANSPORTATION

CROSS SECTIONS
I-57 AT PAULING ROAD

SCALE: | SHEET 23 OF 24 SHEETS | STA. 115+00.00 TO STA. 115+50.00

F.A.I. RTE.	SECTION	COUNTY	TOTAL SHEETS	SHEET NO.
57	99-1HB-2-BR	WILL	133	123

CONTRACT NO. 60R76

ILLINOIS | FED. AID PROJECT

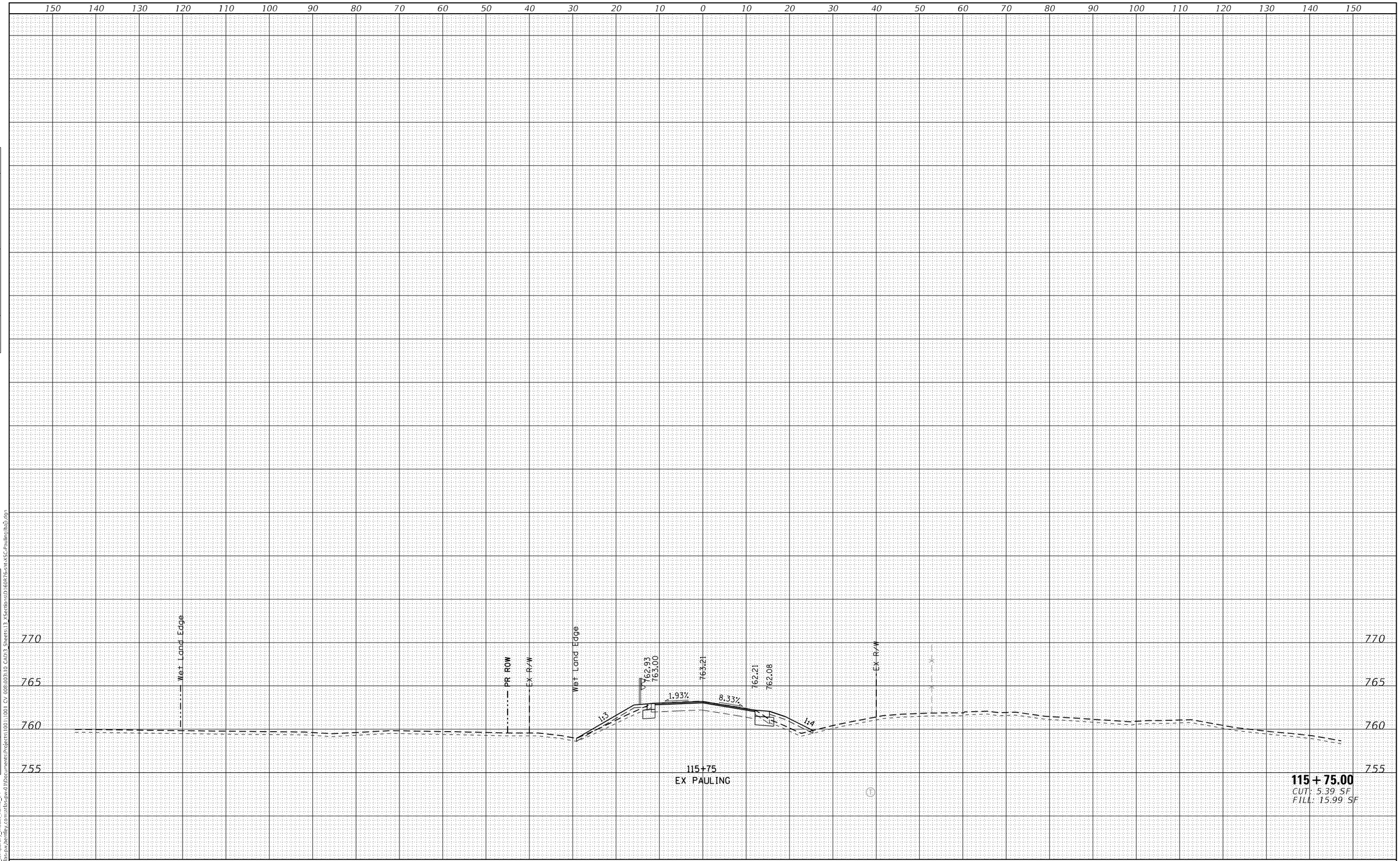

FINAL SURVEY		BY	DATE
	SURVEYED		
	PLOTTED		
NOTE BOOK	TEMPLATE		
	AREAS		
NO.	AREAS CHECKED		

ORIGINAL SURVEY		BY	DATE
	SURVEYED		
	PLOTTED		
NOTE BOOK	TEMPLATE		
	AREAS		
NO.	AREAS CHECKED		

MODEL: XS_SHEET_temporary_model_name_24
FILE NAME: pw:\\atlas-pw.bentley.com:atlas-pw-01\Documents\Projects\100\1001 CV 008\003\10 CAD\3 Sheets\3 2Sections\D160R76-sht-XSC-Pauling(bal).dgn

AEG ATLAS ENGINEERING GROUP, LTD.

USER NAME = cpujari	DESIGNED - BAJ	REVISED -
	DRAWN - BAJ	REVISED -
PLOT SCALE = 20.0000 ' / in.	CHECKED - BA	REVISED -
PLOT DATE = 3/7/2025	DATE - 03/06/2024	REVISED -

STATE OF ILLINOIS
DEPARTMENT OF TRANSPORTATION

CROSS SECTIONS
I-57 AT PAULING ROAD

SCALE: | SHEET 24 OF 24 SHEETS | STA. 115+75.00 TO STA. 115+75.00

F.A.I. RTE.	SECTION	COUNTY	TOTAL SHEETS	SHEET NO.
57	99-1HB-2-BR	WILL	133	124
		CONTRACT NO. 60R76		
		ILLINOIS	FED. AID PROJECT	

METHOD OF MEASUREMENT

REFER TO SECTION 442 OF THE STANDARD SPECIFICATIONS FOR ROAD AND BRIDGE CONSTRUCTION AND THE RECURRING SPECIAL PROVISION "PATCHING WITH HOT-MIX ASPHALT OVERLAY REMOVAL."

BASIS OF PAYMENT

1. REFER TO SECTION 442 OF THE STANDARD SPECIFICATIONS FOR ROAD AND BRIDGE CONSTRUCTION AND THE RECURRING SPECIAL PROVISION "PATCHING WITH HOT-MIX ASPHALT OVERLAY REMOVAL."
2. SAW CUT/SCORING OF EXISTING HMA OVERLAY IS INCLUDED IN THE COST OF PAVEMENT PATCHING.
3. SAW CUT/SCORING OF EXISTING PAVEMENT IS INCLUDED IN THE COST OF PAVEMENT PATCHING.

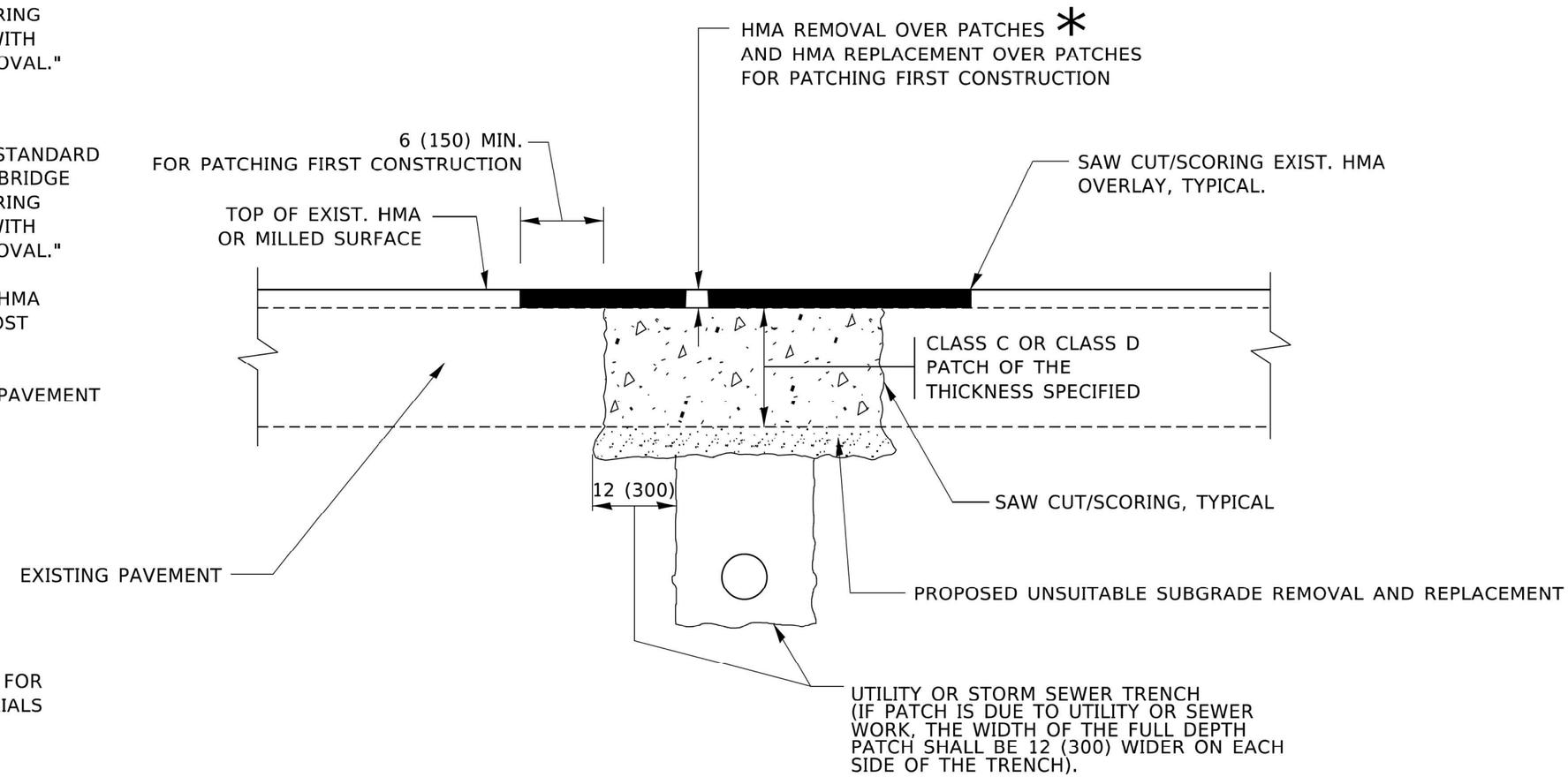

* SEE TYPICAL SECTIONS FOR THICKNESS AND MATERIALS

SEQUENCE OF CONSTRUCTION (PATCHING FIRST)

1. REMOVE THE EXISTING HMA MATERIAL OVER THE AREA TO BE PATCHED.
2. REMOVE AND REPLACE WITH CLASS C OR D PATCH.
3. REPLACE HMA MATERIAL OVER THE AREA TO BE PATCHED.

SEQUENCE OF CONSTRUCTION (MILLING FIRST)

1. MILL HMA FIRST IF THERE IS AT LEAST 4½ INCHES OR MORE OF HMA MATERIAL ON TOP OF THE EXISTING PAVEMENT OR IF THE PAVEMENT IS FULL DEPTH HMA. A MINIMUM OF 2 INCHES OF HMA MATERIAL SHALL BE IN PLACE AFTER MILLING.
2. REMOVE AND REPLACE WITH FULL DEPTH CLASS D PATCHES TO TOP OF MILLED SURFACE.

ALL DIMENSIONS ARE IN INCHES (MILLIMETERS) UNLESS OTHERWISE SHOWN.

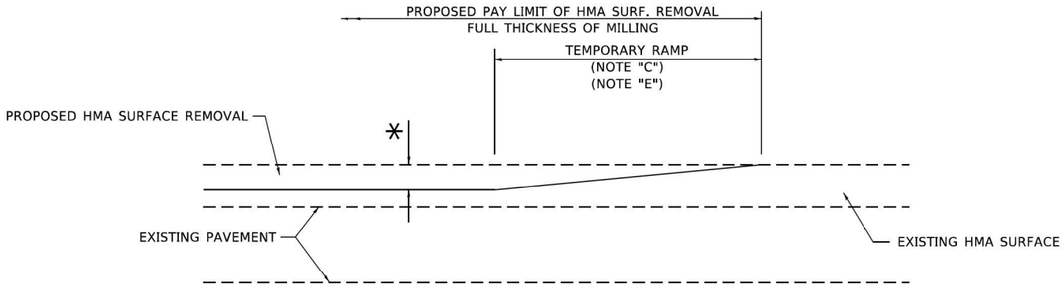

MILLED TEMPORARY RAMP

(FOR BUTT JOINT AND HMA TAPER SEE DETAIL BELOW)

OPTION 1

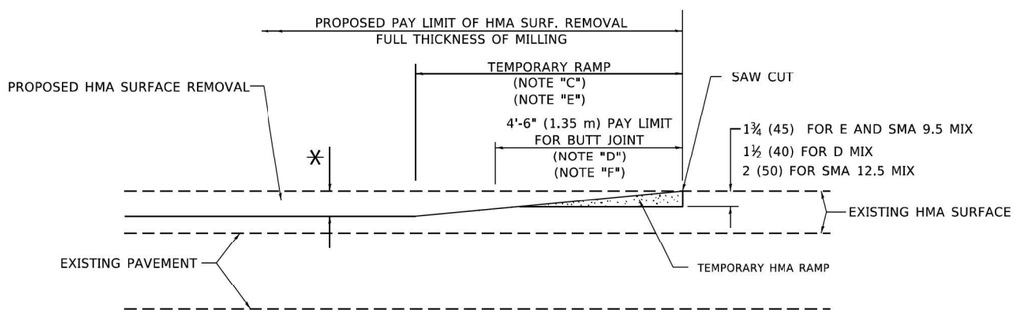

HMA CONSTRUCTED TEMPORARY RAMP

(FOR BUTT JOINT AND HMA TAPER SEE DETAIL BELOW)

OPTION 2

TYPICAL TEMPORARY RAMP

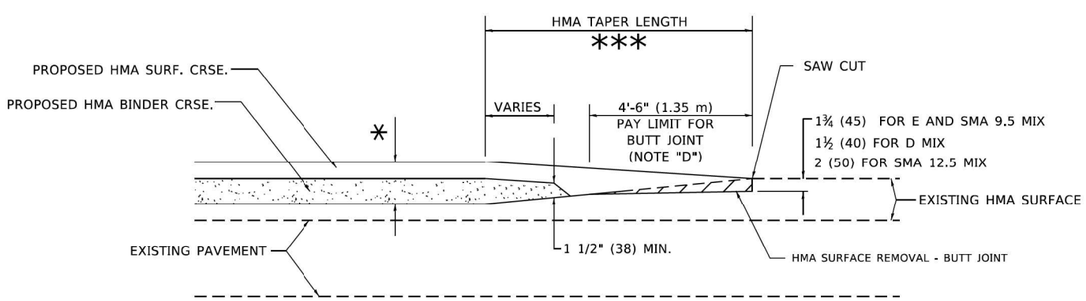

BUTT JOINT AND HMA TAPER

TYPICAL BUTT JOINT AND HMA TAPER FOR MILLING AND RESURFACING

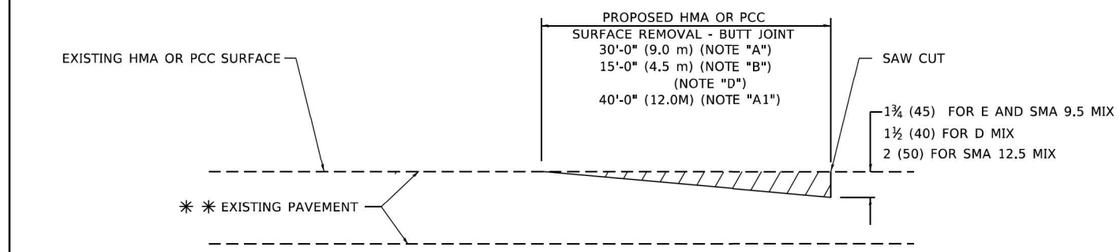

BUTT JOINT DETAIL

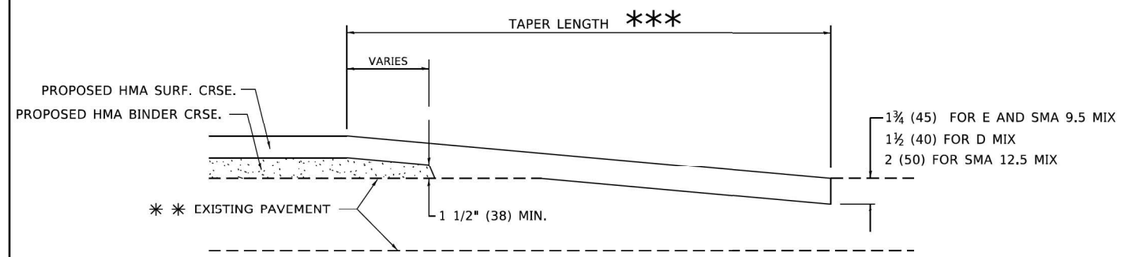

HMA TAPER DETAIL

TYPICAL BUTT JOINT AND HMA TAPER FOR RESURFACING ONLY

** PC CONCRETE, HMA OR HMA RESURFACED PAVEMENT.

GENERAL NOTES

A. MAINLINE ARTERIAL ROADWAYS AND MAJOR SIDE ROADS.

A1. INTERSTATES

B. MINOR SIDE ROADS.

C. THE TEMP. RAMP SHALL BE CONSTRUCTED IMMEDIATELY UPON REMOVAL OF THE EXISTING HMA SURFACE.

D. THE BUTT JOINT SHALL BE CONSTRUCTED IMMEDIATELY PRIOR TO PLACING THE PROPOSED HMA COURSES.

E. TAPER THE TEMP. RAMP AT A RATE OF 3' - 4" (1.02m) PER 1 INCH (25 mm) OF MILLING THICKNESS.

* SEE TYPICAL SECTIONS FOR MILLING THICKNESS.

F. SEE ARTICLE 406.08 AND 406.14 OF THE STANDARD SPECIFICATIONS FOR "HMA AND/OR PCC SURFACE REMOVAL, BUTT JOINT".

*** 20'-0" (6.1 m) PER 1 (25) RESURFACING (NOTE "A")
10'-0" (3.0 m) PER 1 (25) RESURFACING (NOTE "B")

BASIS OF PAYMENT

1. THE BUTT JOINT WILL BE PAID FOR AT THE CONTRACT UNIT PRICE PER SQUARE YARD (SQUARE METER) FOR "HOT-MIX ASPHALT SURFACE REMOVAL - BUTT JOINT" OR FOR "PORTLAND CEMENT CONCRETE SURFACE REMOVAL- BUTT JOINT".
2. THE TEMPORARY RAMP AND SAW CUT SHALL BE INCLUDED IN THE UNIT COST FOR HMA OR PCC SURFACE REMOVAL-BUTT JOINT.

ALL DIMENSIONS ARE IN INCHES (MILLIMETERS) UNLESS OTHERWISE SHOWN.

MODEL: Default
FILE NAME: pw:\\ildot-pw.bentley.com:PWIDOT\Documents\IDOT Offices\District 1\Projects\DistStd22x34\CADData\CADsheets\bd32.dgn

ATLAS ENGINEERING GROUP, LTD.

USER NAME = Lawrence.DeManche	DESIGNED - M. DE YONG	REVISED - A. ABBAS 03-21-97	
	DRAWN -	REVISED - M. GOMEZ 04-06-01	
PLOT SCALE = 100.0000 ' / in.	CHECKED -	REVISED - R. BORO 01-01-07	
PLOT DATE = 11/18/2022	DATE - 06-13-90	REVISED - K. SMITH 11-18-22	

STATE OF ILLINOIS
DEPARTMENT OF TRANSPORTATION

BUTT JOINT AND
HMA TAPER DETAILS

SCALE: NONE | SHEET 1 OF 1 SHEETS | STA. TO STA.

F.A.I RTE.	SECTION	COUNTY	TOTAL SHEETS	SHEET NO.
57	99-1H8-2-BR	WILL	133	126
	BD400-05 BD-32	CONTRACT NO. 60R76		
		ILLINOIS FED. AID PROJECT		

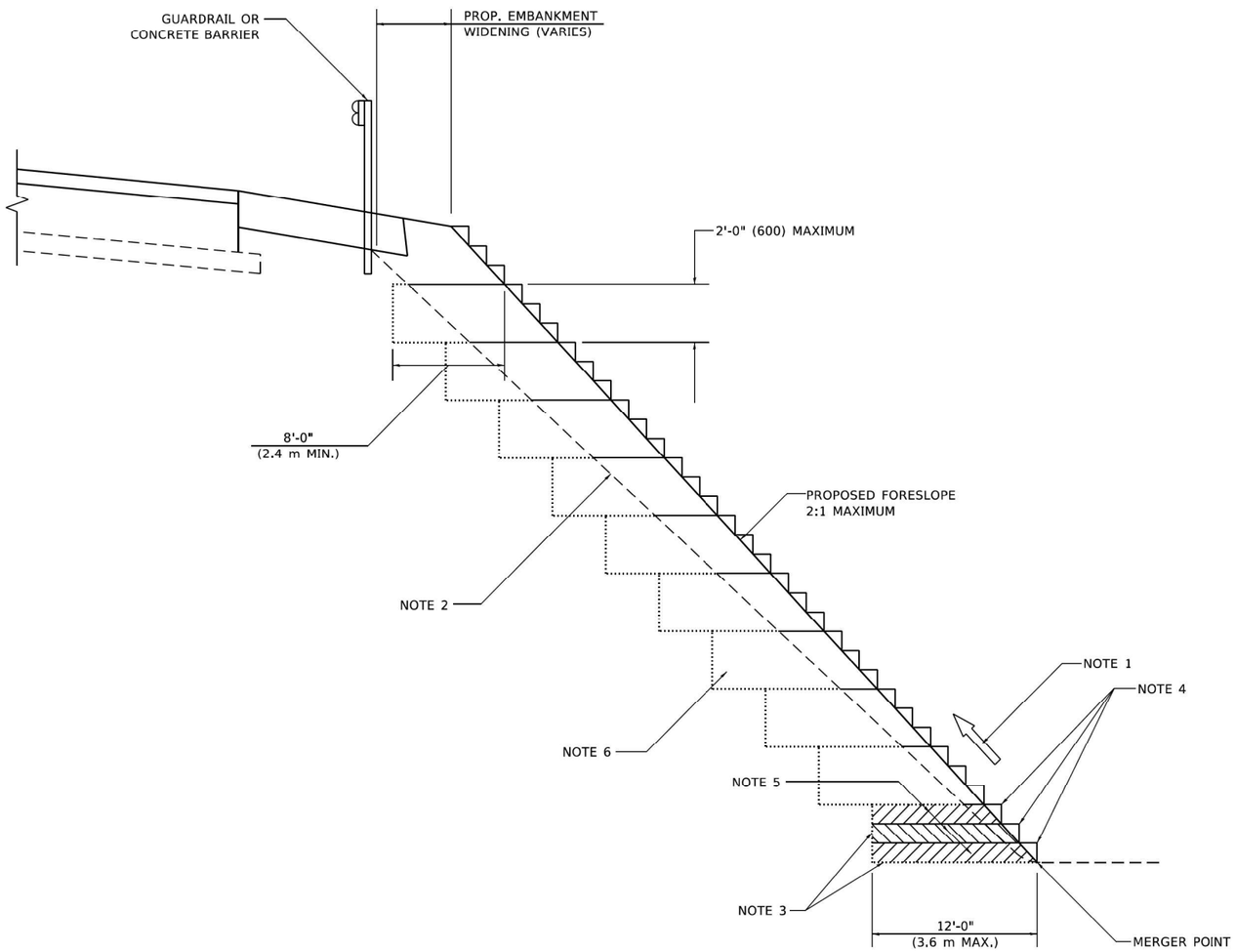

TYPICAL BENCHING DETAIL FOR EMBANKMENT

GENERAL NOTES

1. CONSTRUCT SUCCEEDING BENCH CUTS AND EMBANKMENT PLACEMENT AND COMPACTION FROM BOTTOM TO TOP IN STAIRSTEP FASHION.
2. EXISTING FORESLOPE PREPARED IN ACCORDANCE WITH ARTICLE 205.03 OF THE STANDARD SPECIFICATIONS.
3. BENCH CUT EXISTING SLOPE TYPICAL FOR EACH STEP.
4. TRIM TO FINAL SLOPE.
5. EQUAL 8-INCH (200) LIFTS OF EMBANKMENT COMPACTED IN ACCORDANCE WITH ARTICLE 205.05 OF THE STANDARD SPECIFICATIONS.

BASIS OF PAYMENT

1. EXCAVATION OF BENCH CUTS WITHIN EXISTING EMBANKMENT WILL BE PAID FOR AT THE CONTRACT UNIT PRICE PER CUBIC METER OR CUBIC YARD FOR "EARTH EXCAVATION". THIS PRICE WILL INCLUDE ALL LABOR AND MATERIAL, NO ADDITIONAL COMPENSATION WILL BE ALLOWED.

ALL DIMENSIONS ARE IN INCHES (MILLIMETERS) UNLESS OTHERWISE SHOWN.

MODEL: Default
FILE NAME: pw:\\ildot-pw.bentley.com:PWIDOT\Documents\IDOT Offices\District 1\Projects\DistStd22x34\CADData\CADsheets\bd51.dgn

AEG ATLAS ENGINEERING GROUP, LTD.	USER NAME = Lawrence.DeManche	DESIGNED -	REVISED - K. SMITH 11-18-22	STATE OF ILLINOIS DEPARTMENT OF TRANSPORTATION	BENCHING DETAIL FOR EMBANKMENT WIDENING	F.A.I RTE.	SECTION	COUNTY	TOTAL SHEETS	SHEET NO.
		DRAWN - CADD	REVISED -			57	99-1H8-2-BR	WILL	133	127
	PLOT SCALE = 100.0000 ' / in.	CHECKED - S.E.B.	REVISED -			BD-51		CONTRACT NO. 60R76		
	PLOT DATE = 11/18/2022	DATE - 06-16-04	REVISED -		SCALE: NONE / SHEET 1 OF 1 SHEETS / STA. TO STA.		ILLINOIS	FED. AID PROJECT		

SINGLE LANE WEAVE

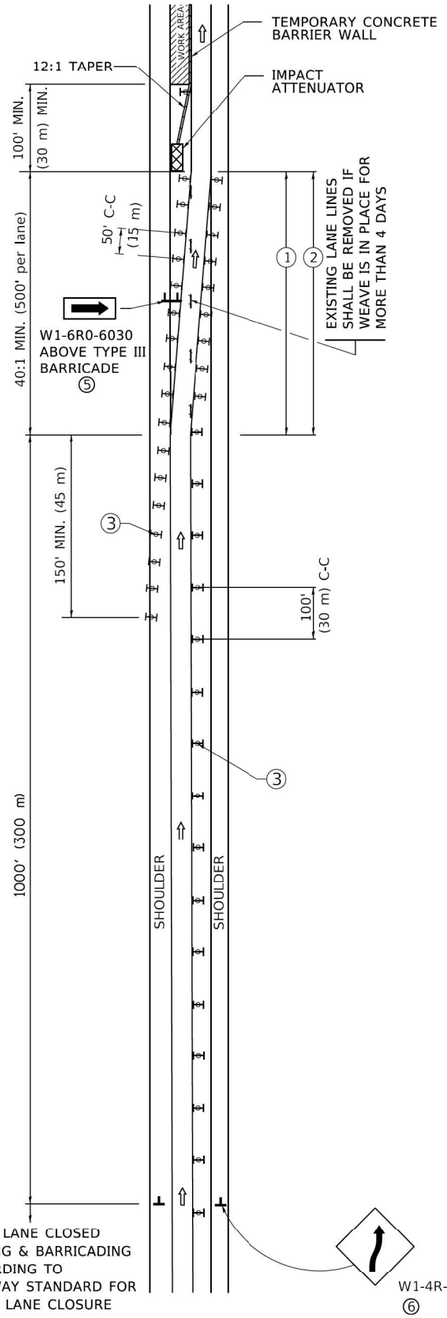

MULTI–LANE WEAVE

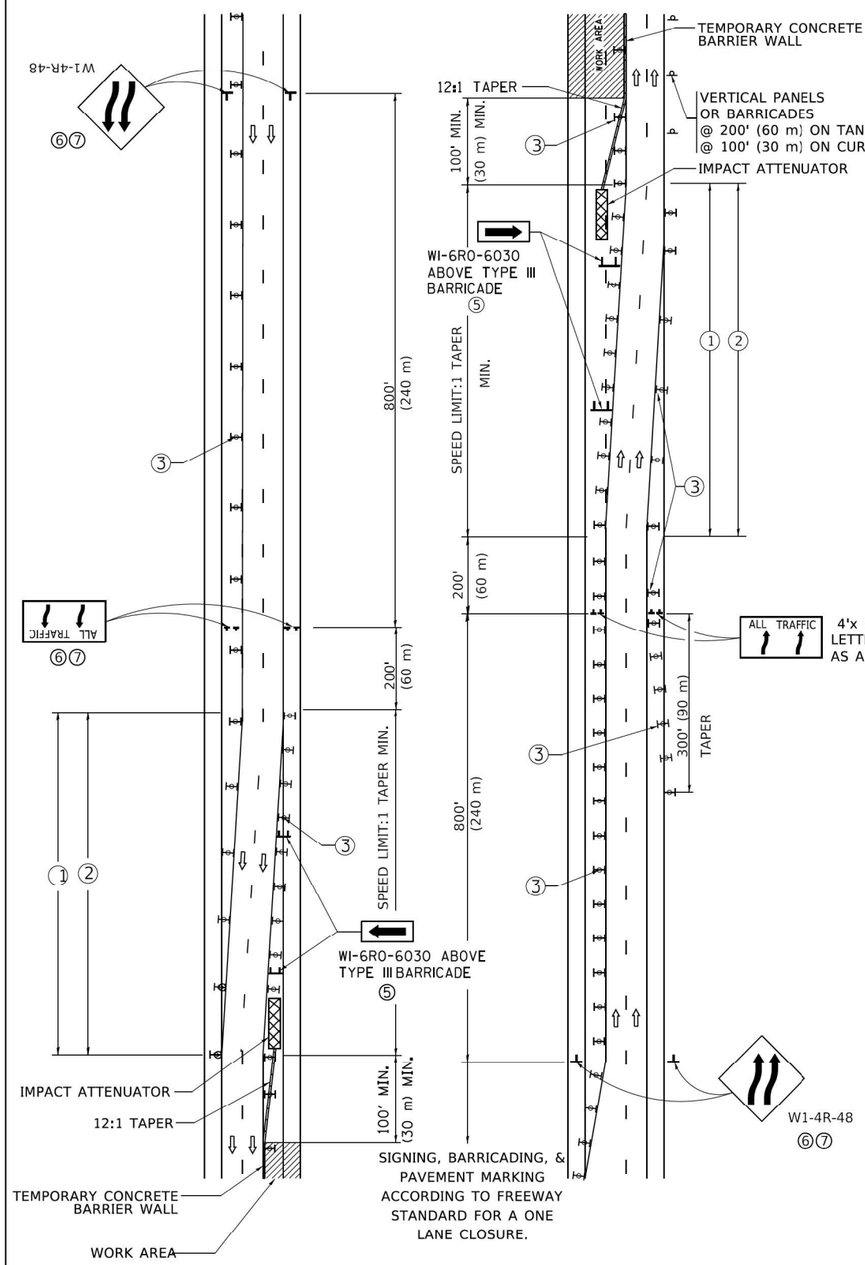

GENERAL NOTES:

1. EXISTING CONFLICTING PAVEMENT MARKING LINES SHALL BE REMOVED. PAVEMENT MARKING REMOVAL SHALL NOT BE REQUIRED FOR SINGLE LANE WEAVES UNDER 4 DAYS IN DURATION.
2. CONTINOUS REFLECTIVE TEMPORARY PAVEMENT MARKING TAPE SHALL BE PLACED THROUGHOUT THE TAPER AND FOR 300' (90 m) ALONG SIDE THE WORK AREA WHERE THE CLOSURE TIME IS GREATER THAN FOURTEEN DAYS. THE LEFT EDGE LINE SHALL BE YELLOW AND THE RIGHT EDGE LINE SHALL BE WHITE. FOR MULTI-LANE WEAVES LANE LINES SHALL BE 5 INCH, 10'-30' (3 m-9 m) SKIP DASH, WHITE.
3. PLASTIC DRUMS WITH STEADY BURN LIGHTS AT 50' (15 m) C-C SPACING IN TAPERS AND 100' (30 m) C-C SPACING IN TANGENTS.
4. ALL SIGNS SHALL BE POST MOUNTED IF THE CLOSURE TIME EXCEEDS FOUR DAYS.
5. TYPE III BARRICADES MAY BE OMMITTED FOR SINGLE-LANE WEAVES UNDER 24-HOURS IN DURATION. W1-6 SIGNS WILL STILL BE REQUIRED. IF THE WIDTH OF OFFSET IS LESS THAN 6' THEN THE TYPE III BARRICADE WITH ATTACHED ARROW SIGN PANEL CAN BE ELIMINATED IN THE TAPER AREAS.
6. WHEN THE LENGTH OF THE SHIFTED SEGMENT (DISTANCE BETWEEN WEAVE POINTS) IS LESS THAN 1500', DOUBLE REVERSE CURVE SIGNS (W24-1) SHOULD BE USED INSTEAD OF THE REVERSE CURVE (W1-4) SIGNS. ARROWS ON THE 4'X8' "ALL TRAFFIC" SIGNS SHALL BE THE SAME SHAPE.
7. THE NUMBER OF ARROWS ON THESE SIGNS SHALL MATCH THE NUMBER OF LANES OPEN TO TRAFFIC.

SYMBOLS

- DIRECTION OF TRAFFIC
- WORK AREA
- SIGN ON PORTABLE OR PERMANENT SUPPORT
- TYPE II BARRICADE OR DRUM WITH MONO-DIRECTIONAL STEADY BURNING LIGHT
- TEMPORARY CONCRETE BARRIER WALL
- IMPACT ATTENUATOR
- W24-1-48 ⑦

ALL DIMENSIONS ARE IN INCHES (MILLIMETERS) UNLESS OTHERWISE SHOWN

MODEL: Default
FILE NAME: pw:\\L084EBIDINTEG.illinois.gov:PWIDOT\Documents\IDOT Offices\District 1\Projects\Dist5\d22x34\CADData\CADsheets\tc09.dgn

AEG ATLAS ENGINEERING GROUP, LTD.

USER NAME = footemj	DESIGNED - D.W.S.	REVISED - J.A.F. 02-06	
	DRAWN -	REVISED - S.P.B. 01-07	
PLOT SCALE = 50.0000 ' / in.	CHECKED -	REVISED - S.P.B. 12-09	
PLOT DATE = 3/4/2019	DATE - 02-87	REVISED - M.D. 06-13	

STATE OF ILLINOIS
DEPARTMENT OF TRANSPORTATION

TRAFFIC CONTROL DETAILS FOR FREEWAY SINGLE & MULTI–LANE WEAVE

SCALE: NONE | SHEET 1 OF 1 SHEETS | STA. TO STA.

F.AI RTE.	SECTION	COUNTY	TOTAL SHEETS	SHEET NO.
57	99-1HB-2-BR	WILL	133	128
	TC-09	CONTRACT NO.60R76		
		ILLINOIS	FED. AID PROJECT	

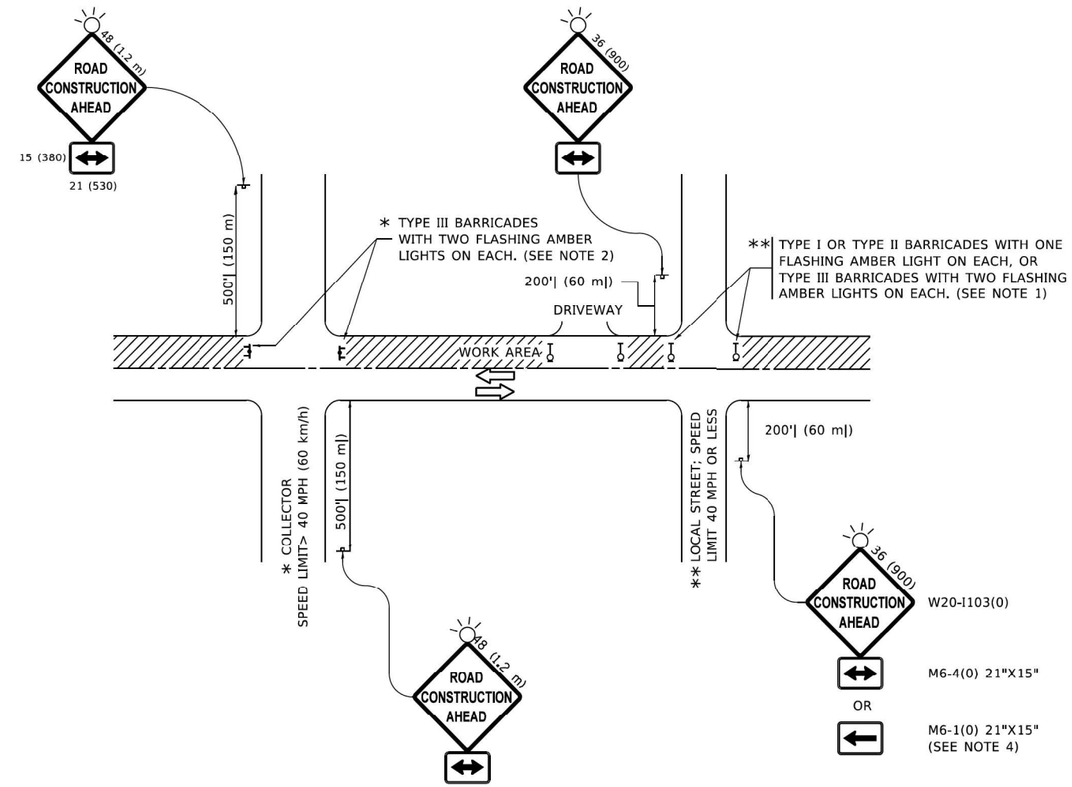

NOTES:

1. SIDE ROAD WITH A SPEED LIMIT OF 40 MPH (60 km/h) OR LESS AS SHOWN ON THE DRAWING AND AS DIRECTED BY THE ENGINEER:

   a) ONE "ROAD CONSTRUCTION AHEAD" SIGN 36 x 36 (900x900) WITH A FLASHER MOUNTED ON IT APPROXIMATELY 200' (60 m) IN ADVANCE OF THE MAIN ROUTE.

   b) THE CLOSED PORTION OF THE MAIN ROUTE SHALL BE PROTECTED BY BLOCKING WITH TYPE I, TYPE II OR TYPE III BARRICADES, 1/3 OF THE CROSS SECTION OF THE CLOSED PORTION.

2. SIDE ROAD WITH A SPEED LIMIT GREATER THAN 40 MPH (60 km/h) AS SHOWN ON THE DRAWING AND AS DIRECTED BY THE ENGINEER:

   a) ONE "ROAD CONSTRUCTION AHEAD" SIGN 48 x 48 (1.2 m x 1.2 m) WITH A FLASHER MOUNTED ON IT APPROXIMATELY 500' (150 m) IN ADVANCE OF THE MAIN ROUTE.

   b) THE CLOSED PORTION OF THE MAIN ROUTE SHALL BE PROTECTED BY BLOCKING WITH TYPE III BARRICADES, 1/2 OF THE CROSS SECTION OF THE CLOSED PORTION.

3. CONES MAY BE SUBSTITUTED FOR BARRICADES OR DRUMS AT HALF THE SPACING DURING DAY OPERATIONS. CONES SHALL BE A MINIMUM OF 28 (710) IN HEIGHT.

4. WHEN THE SIDE ROAD LIES BETWEEN THE BEGINNING OF THE MAINLINE SIGNING AND THE WORK ZONE, A SINGLE HEADED ARROW (M6-1) SHALL BE USED IN LIEU OF THE DOUBLE HEADED ARROW (M6-4).

5. WHEN WORK IS BEING PERFORMED ON A SIDE ROAD OR DRIVEWAY, FOLLOW THE APPLICABLE STANDARD(S). THE DIRECTIONAL ARROW (M6-1 OR M6-4) SHALL BE COVERED OR REMOVED WHEN NO LONGER CONSISTENT WITH THE TRAFFIC CONTROL SET-UP.

6. ADVANCE WARNING SIGNS ARE TO BE OMITTED ON DRIVEWAYS UNLESS OTHERWISE SPECIFIED IN THE PLANS OR BY THE ENGINEER.

7. THE TRAFFIC CONTROL AND PROTECTION FOR SIDE ROADS, INTERSECTIONS, AND DRIVEWAYS SHALL BE INCLUDED IN THE COST OF SPECIFIED TRAFFIC CONTROL STANDARDS OR ITEMS.

All dimensions are in inches (millimeters) unless otherwise shown.

MODEL: Default
FILE NAME: pw:\\ildot-pw.bentley.com:PWIDOT\Documents\IDOT Offices\District 1\Projects\Dist5\d22x34\CADData\CADsheets\tc10.dgn

ATLAS ENGINEERING GROUP, LTD.

USER NAME = Lawrence.DeManche	DESIGNED - L.H.A.	REVISED - T. RAMMACHER 01-06-00	
	DRAWN -	REVISED - A. SCHUETZE 07-01-13	
PLOT SCALE = 100.0000 ' / in.	CHECKED -	REVISED - A. SCHUETZE 09-15-16	
PLOT DATE = 5/3/2024	DATE - 06-89	REVISED - D. SENDERAK 05-03-24	

STATE OF ILLINOIS
DEPARTMENT OF TRANSPORTATION

TRAFFIC CONTROL AND PROTECTION FOR SIDE ROADS, INTERSECTIONS, AND DRIVEWAYS

SCALE: NONE | SHEET 1 OF 1 SHEETS | STA. TO STA.

F.A.I RTE.	SECTION	COUNTY	TOTAL SHEETS	SHEET NO.
57	99-1HB-2-BR	WILL	133	129
	TC-10	CONTRACT NO. 60R76		
		ILLINOIS	FED. AID PROJECT	

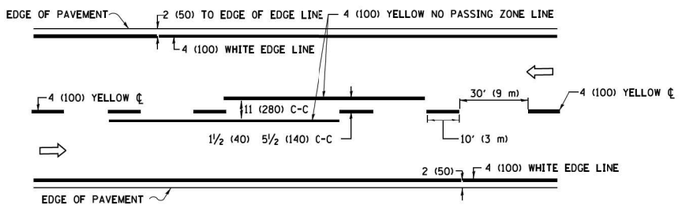

2–LANE ROADWAY

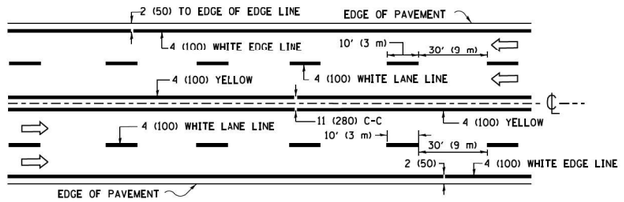

MULTI–LANE UNDIVIDED

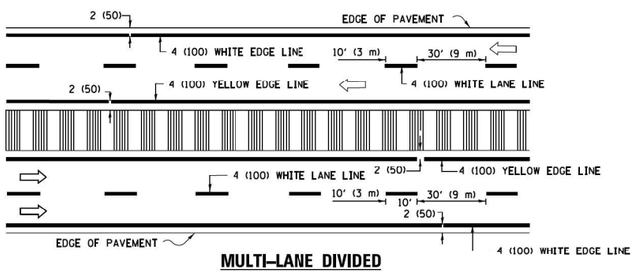

MULTI–LANE DIVIDED
WITH MEDIAN

TYPICAL LANE AND EDGE LINE MARKING

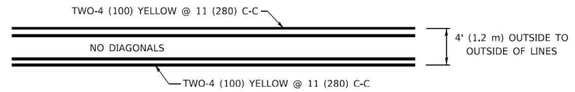

4' (1.2 m) WIDE MEDIANS ONLY

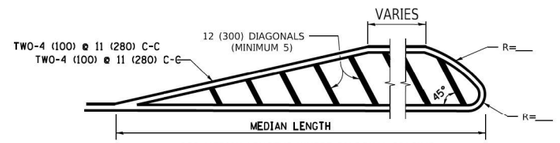

FOR MEDIAN LENGTHS WHERE DIAGONAL SPACING CANNOT BE ATTAINED, USE 5 (FIVE) EQUALLY SPACED DIAGONAL LINES.

DIAGONAL LINE SPACING: 50' (15 m) C-C (LESS THAN 30MPH (50 km/h))
75' (25 m) C-C 30MPH (50 km/h) TO 45MPH (70 km/h))
150' (45 m) C-C (MORE THAN 45MPH (70 km/h))

MEDIANS OVER 4' (1.2 m) WIDE

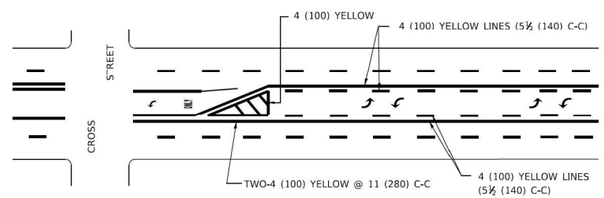

A MINIMUM OF TWO PAIRS OF TURN ARROWS SHALL BE USED, WHITE IN COLOR. ADDITIONAL PAIRS SHALL BE PLACED AT 200' (60 m) TO 300' (90 m) INTERVALS.

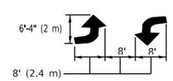

MEDIAN WITH TWO–WAY LEFT TURN LANE

TYPICAL PAINTED MEDIAN MARKING

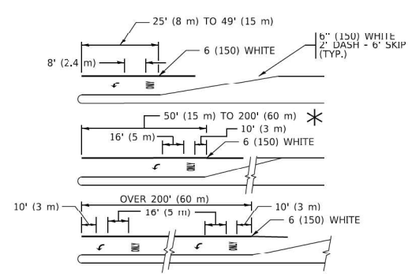

FULL SIZE LETTERS 8' (2.4 m) AND ARROWS SHALL BE USED.
AREA = 15.6 SQ. FT. (1.5 m²) **ONLY** AREA = 20.8 SQ. FT. (1.9 m²)

* TURN LANES IN EXCESS OF 400' (120 m) IN LENGTH MAY HAVE AN ADDITIONAL SET OF ARROW - "ONLY" INSTALLED MIDWAY BETWEEN THE OTHER TWO SETS OF ARROW - "ONLY".

TYPICAL LEFT (OR RIGHT) TURN LANE

TYPICAL TURN LANE MARKING

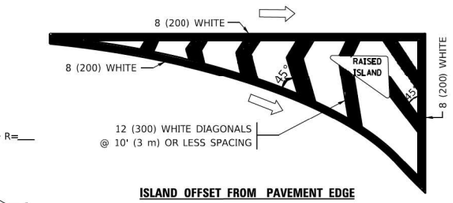

ISLAND OFFSET FROM PAVEMENT EDGE

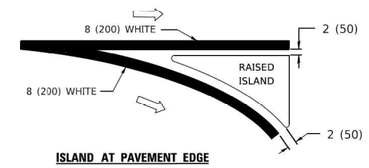

ISLAND AT PAVEMENT EDGE

TYPICAL ISLAND MARKING

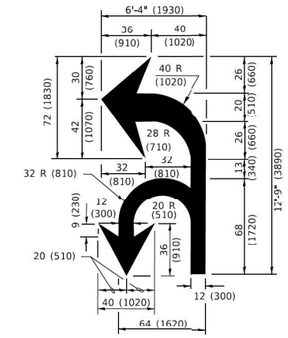

COMBINATION LEFT AND U–TURN

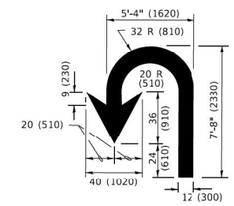

U–TURN

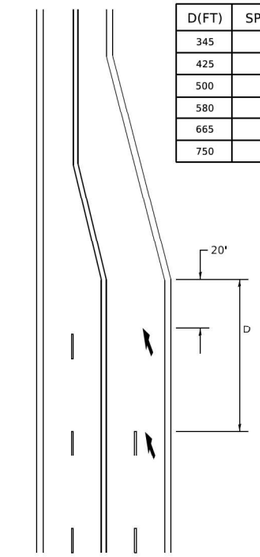

D(FT)	SPEED LIMIT
345	30
425	35
500	40
580	45
665	50
750	55

LANE REDUCTION TRANSITION

* LANE REDUCTION ARROWS REQUIRED AT SPEEDS OF 45 MPH OR GREATER OR WHEN SPECIFIED IN PLANS.

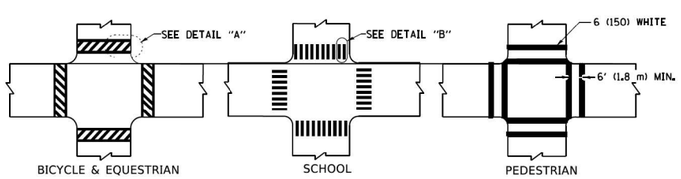

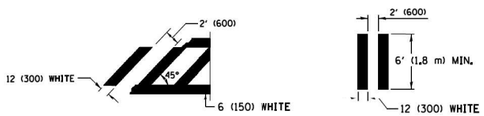

DETAIL "A" **DETAIL "B"**

TYPICAL CROSSWALK MARKING

* MARKINGS SHALL BE INSTALLED PARALLEL TO THE CENTERLINE OF THE ROAD WHICH IT CROSSES

TYPE OF MARKING	WIDTH OF LINE	PATTERN	COLOR	SPACING / REMARKS
CENTERLINE ON 2 LANE PAVEMENT	4 (100)	SKIP-DASH	YELLOW	10' (3 m) LINE WITH 30' (9 m) SPACE
CENTERLINE ON MULTI-LANE UNDIVIDED PAVEMENT	2 @ 4 (100)	SOLID	YELLOW	11 (280) C-C
NO PASSING ZONE LINES: FOR ONE DIRECTION FOR BOTH DIRECTIONS	4 (100) 2 @ 4 (100)	SOLID SOLID	YELLOW YELLOW	5½ (140) C-C FROM SKIP-DASH CENTERLINE 11 (280) C-C OMIT SKIP-DASH CENTERLINE BETWEEN
LANE LINES	4 (100) 5 (125) ON FREEWAYS	SKIP-DASH SKIP-DASH	WHITE WHITE	10' (3 m) LINE WITH 30' (9 m) SPACE
DOTTED LINES (EXTENSIONS OF CENTER, LANE OR TURN LANE MARKINGS)	SAME AS LINE BEING EXTENDED	SKIP-DASH	SAME AS LINE BEING EXTENDED	2' (600) LINE WITH 6' (1.8 m) SPACE
EDGE LINES	4 (100)	SOLID	YELLOW-LEFT WHITE-RIGHT	OUTLINE MEDIANS IN YELLOW
TURN LANE MARKINGS	6 (150) LINE: FULL SIZE LETTERS & SYMBOLS (8' (2.4m))	SOLID	WHITE	SEE TYPICAL TURN LANE MARKING DETAIL
TWO WAY LEFT TURN MARKING	2 @ 4 (100) EACH DIRECTION 8' (2.4m) LEFT ARROW	SKIP-DASH AND SOLID IN PAIRS	YELLOW WHITE	10' (3 m) LINE WITH 30' (9 m) SPACE FOR SKIP-DASH; 5½ (140) C-C BETWEEN SOLID LINE AND SKIP-DASH LINE SEE TYPICAL TWO-WAY LEFT TURN MARKING DETAIL
CROSSWALK LINES (PEDESTRIAN) A. DIAGONALS (BIKE & EQUESTRIAN) B. LONGITUDINAL BARS (SCHOOL)	2 @ 6 (150) 12 (300) @ 45° 12 (300) @ 90°	SOLID SOLID SOLID	WHITE WHITE WHITE	NOT LESS THAN 6' (1.8 m) APART 2' (600) APART 2' (600) APART SEE TYPICAL CROSSWALK MARKING DETAILS.
STOP LINES	24 (600)	SOLID	WHITE	PLACE 4' (1.2 m) IN ADVANCE OF AND PARALLEL TO CROSSWALK, IF PRESENT. OTHERWISE, PLACE AT DESIRED STOPPING POINT. PARALLEL TO CROSSROAD CENTERLINE, WHERE POSSIBLE
PAINTED MEDIANS	2 @ 4 (100) WITH 12 (300) DIAGONALS @ 45° NO DIAGONALS USED FOR 4' (1.2 m) WIDE MEDIANS	SOLID	YELLOW: TWO WAY TRAFFIC WHITE: ONE WAY TRAFFIC	11 (280) C-C FOR THE DOUBLE LINE SEE TYPICAL PAINTED MEDIAN MARKING.
GORE MARKING AND CHANNELIZING LINES	8 (200) WITH 12 (300) DIAGONALS @ 45°	SOLID	WHITE	DIAGONALS: 15' (4.5 m) C-C (LESS THAN 30MPH (50 km/h)) 20' (6 m) C-C 30MPH (50 km/h) TO 45MPH (70 km/h)) 30' (9 m) C-C (OVER 45MPH (70 km/h))
RAILROAD CROSSING	24 (600) TRANSVERSE LINES; "RR" IS 6' (1.8 m) LETTERS; 16 (400) LINE FOR "X"	SOLID	WHITE	SEE STATE STANDARD 780001 AREA OF: "R"=3.6 SQ. FT. (0.33 m²) EACH "X"=54.0 SQ. FT. (5.0 m²)
SHOULDER DIAGONALS (REQUIRED FOR SHOULDERS ≥ 8')	12 (300) @ 45°	SOLID	WHITE - RIGHT YELLOW - LEFT	50' (15 m) C-C (LESS THAN 30MPH (50 km/h)) 75' (25 m) C-C (30 MPH (50 km/h) TO 45MPH (70 km/h)) 150' (45 m) C-C (OVER 45MPH (70 km/h))
U TURN ARROW	SEE DETAIL	SOLID	WHITE	16.3 SF
2 ARROW COMBINATION LEFT AND U TURN	SEE DETAIL	SOLID	WHITE	30.4 SF

FOR FURTHER DETAILS ON PAVEMENT MARKING REFER TO STANDARD SPECIFICATIONS FOR ROAD AND BRIDGE CONSTRUCTION AND STATE STANDARD 780001.

All dimensions are in inches (millimeters) unless otherwise shown.

MODE: Default
FILE NAME: pw:\\IL084EBIDINTEG.illinois.gov:PWIDOT\Documents\IDOT Offices\District 1\Projects\DistStd22x34\CADdata\CADsheets\tc13.dgn

AEG ATLAS ENGINEERING GROUP, LTD.

USER NAME = footemj	DESIGNED - EVERS	REVISED - C. JUCIUS 09-09-09	
	DRAWN -	REVISED - C. JUCIUS 07-01-13	
PLOT SCALE = 50.0000 ' / in.	CHECKED -	REVISED - C. JUCIUS 12-21-15	
PLOT DATE = 3/4/2019	DATE - 03-19-90	REVISED - C. JUCIUS 04-12-16	

STATE OF ILLINOIS
DEPARTMENT OF TRANSPORTATION

DISTRICT ONE
TYPICAL PAVEMENT MARKINGS

SCALE: NONE | SHEET 1 OF 2 SHEETS | STA. TO STA.

F.A.I RTE.	SECTION	COUNTY	TOTAL SHEETS	SHEET NO.
57	99-1H8-2-BR	WILL	133	130
	TC-13	CONTRACT NO. 60R76		
		ILLINOIS FED. AID PROJECT		

tc13.dgn 3/4/2019 10:34:37 AM User:footemj

PARTIAL RAMP CLOSURE DETAILS

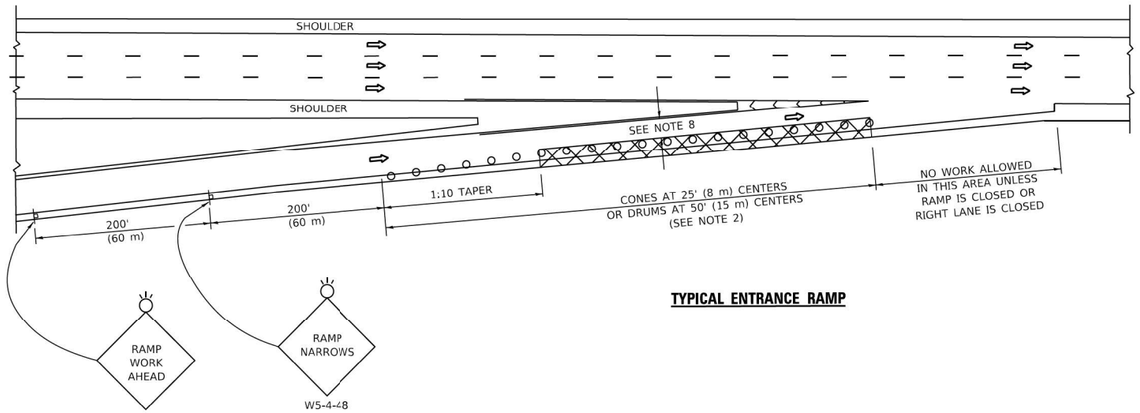

TYPICAL ENTRANCE RAMP

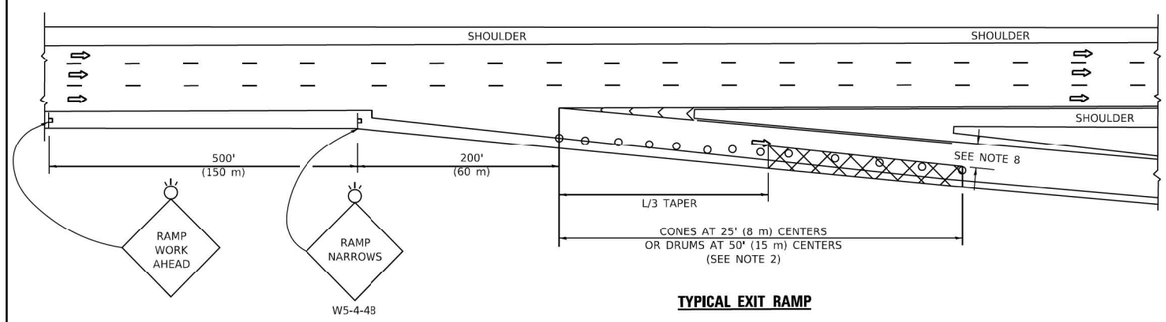

TYPICAL EXIT RAMP

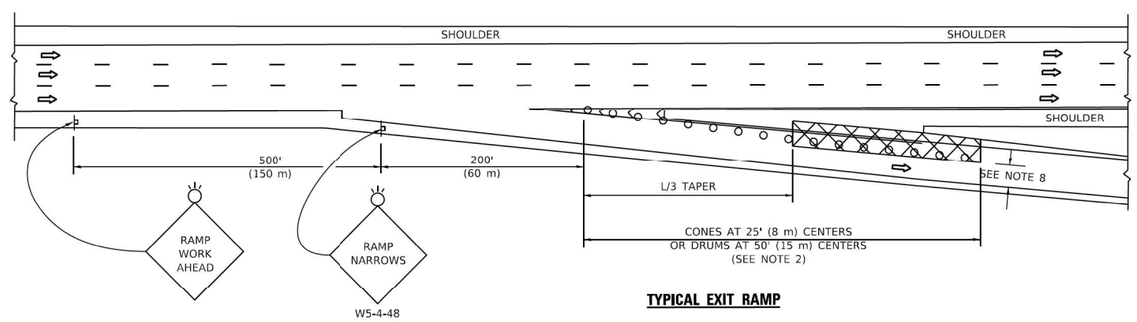

TYPICAL EXIT RAMP

SHOULDER CLOSURE DETAILS

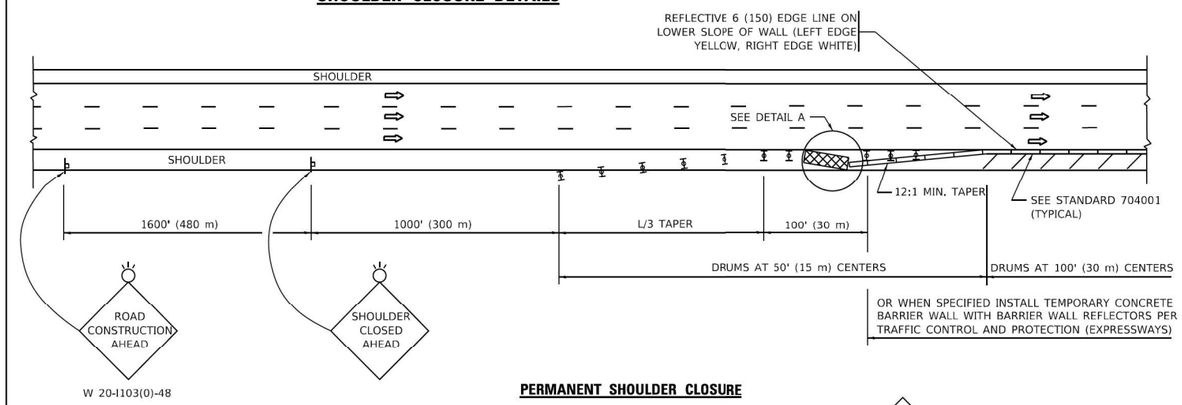

PERMANENT SHOULDER CLOSURE

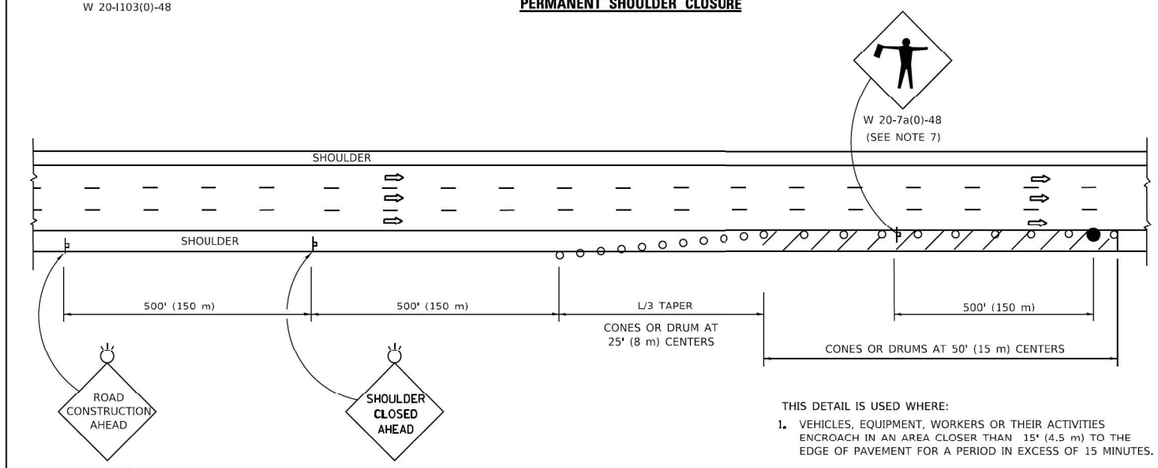

TEMPORARY SHOULDER CLOSURE

THIS DETAIL IS USED WHERE:

1. VEHICLES, EQUIPMENT, WORKERS OR THEIR ACTIVITIES ENCROACH IN AN AREA CLOSER THAN 15' (4.5 m) TO THE EDGE OF PAVEMENT FOR A PERIOD IN EXCESS OF 15 MINUTES.

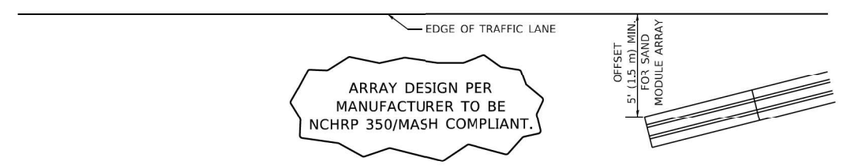

DETAIL "A"
IMPACT ATTENTUATOR, TEMPORARY
(SEE NOTE 5)

SYMBOLS

- ACTIVE WORK AREA
- SIGN ON PORTABLE OR PERMANENT SUPPORT
- FLAGGER WITH CONTROL SIGN
- TYPE II BARRICADE OR DRUM
- CONE, DRUM OR BARRICADE
- IMPACT ATTENUATOR OF TYPE AND TEST LEVEL SPECIFIED

GENERAL NOTES:

1. THE "L" DISTANCE EQUALS:

SPEED LIMIT	FORMULAS	
	METRIC	ENGLISH
45 mph (80 km/h) OR GREATER:	L=0.65(W)(S)	L=(W)(S)

W = WIDTH OF OFFSET IN FEET (METERS)
S = NORMAL POSTED SPEED MPH (KM/H)

2. TYPE II BARRICADES OR DRUMS ARE REQUIRED FOR ALL NIGHTTIME CLOSURES. TYPE II BARRICADES OR DRUMS WITH MONODIRECTIONAL STEADY BURN LIGHTS ARE REQUIRED FOR DELINEATING OBSTICLES, EXCAVATIONS, OR HAZARDS EXCEEDING 100 FT (30m) IN LENGTH AT NIGHT.
3. ALL SIGNS SHALL BE POST MOUNTED IF THE CLOSURE TIME EXCEEDS FOUR DAYS.
4. FLASHING LIGHTS SHALL BE USED DURING THE HOURS OF DARKNESS AND SHALL BE INSTALLED ABOVE THE FIRST TWO SETS OF SIGNS.
5. THE IMPACT ATTENTUATOR, TEMPORARY IS NOT REQUIRED WHEN THE TEMPORARY CONCRETE BARRIER WALL IS PROTECTED BY OR IS TIED INTO THE EXISTING GUARDRAIL. IF OFFSET IS LESS THAN 5 FEET USE NARROW USE TYPE DEVICE TO MEET NCHRP350/MASH.
6. AUTHORIZATION FROM THE DISTRICT'S BUREAU OF TRAFFIC IS REQUIRED FOR ALL FREEWAY CLOSURES.
7. THE FLAGGER AND FLAGGER SIGN ARE REQUIRED AT THE ABOVE WORK SITES WHEN:
   a. FOUR OR MORE WORK VEHICLES ENTER THE TRAFFIC LANES IN A ONE HOUR PERIOD.
   b. THE WORK AVTIVITY REQUIRES FREQUENT ENCROACHMENT INTO THE LANE OPEN TO TRAFFIC.

   THE FLAGGER SHALL BE STATIONED APPROXIMATELY 100' (30 m) TO 200' (60 m) IN ADVANCE OF THE WORKERS.
8. 12' MIN. WIDTH TANGENT SECTION
   16' MIN. WIDTH CURVE SECTION.
9. TEMPORARY SHOULDER AND NON-SYSTEM INTERCHANGE PARTIAL RAMP CLOSURES ARE ALLOWED WEEKDAYS BETWEEN 9:00 A.M. AND 3:00 P.M. AND BETWEEN 7:00 P.M. AND 5:00 A.M. OR AS APPROVED BY THE EXPRESSWAY TRAFFIC OPERATIONS ENGINEER. PERMANENT SHOULDER AND PARTIAL RAMP CLOSURES WILL ONLY BE PERMITTED IF CALLED FOR IN THE PLANS OR AS APPROVED BY THE EXPRESSWAY OPERATIONS ENGINEER.

ALL DIMENSIONS ARE IN INCHES (MILLIMETERS) UNLESS OTHERWISE SHOWN.

MODEL: Default
FILE NAME: pw:\\ildot-pw.bentley.com:PWIDOT\Documents\IDOT Offices\District 1\Projects\District\d22-34\CADData\CADsheets\tc17.dgn

AEG ATLAS ENGINEERING GROUP, LTD.	USER NAME = Lawrence.DeManche	DESIGNED -	REVISED - M.D. 06-13	STATE OF ILLINOIS DEPARTMENT OF TRANSPORTATION	TRAFFIC CONTROL DETAILS FOR FREEWAY SHOULDER CLOSURES AND PARTIAL RAMP CLOSURES
		DRAWN - D.W.S.	REVISED - M.D. 01-18		
	PLOT SCALE = 100.0000 ' / in.	CHECKED -	REVISED - M.D. 10-20		
	PLOT DATE = 5/3/2024	DATE - 11-96	REVISED - D.S. 05-24		SCALE: NONE SHEET 1 OF 1 SHEETS STA. TO STA.

F.A.I RTE.	SECTION	COUNTY	TOTAL SHEETS	SHEET NO.
57	99-1H8-2-BR	WILL	133	131
	TC-17	CONTRACT NO. 60R76		
		ILLINOIS FED. AID PROJECT		

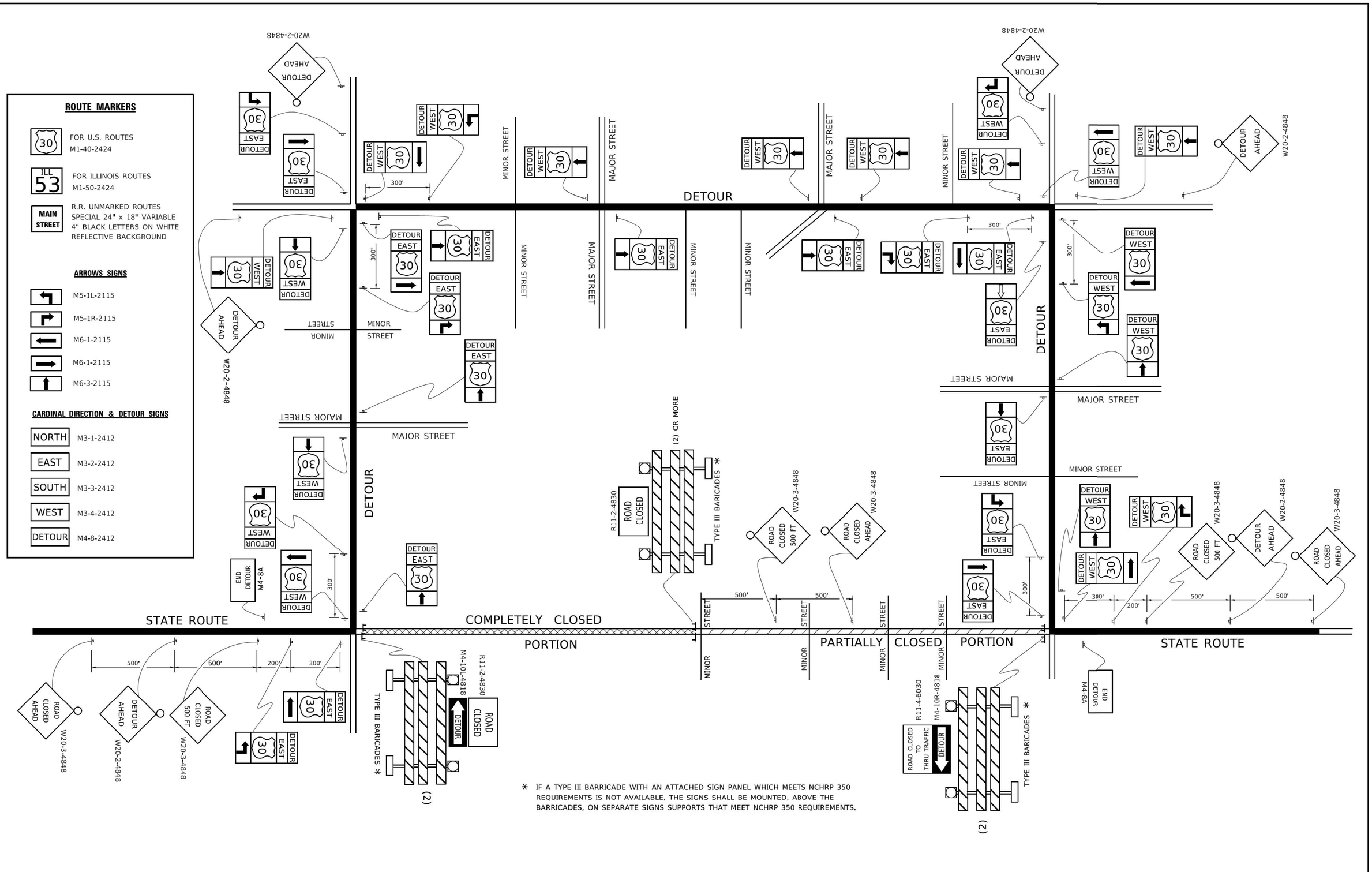

MODE: Default
FILE NAME: pw:\\IL084EBIDINTEG.illinois.gov:PWIDOT\Documents\IDOT Offices\District 1\Projects\DistStd22x34\CADdata\CADsheets\tc21.dgn

AEG ATLAS ENGINEERING GROUP, LTD.

USER NAME = footemj	DESIGNED -	REVISED -	10-18-02
	DRAWN -	REVISED -	R. BORO 09-14-09
PLOT SCALE = 50.0000 ' / in.	CHECKED -	REVISED -	
PLOT DATE = 3/4/2019	DATE -	REVISED -	

STATE OF ILLINOIS
DEPARTMENT OF TRANSPORTATION

DETOUR SIGNING
FOR CLOSING STATE HIGHWAYS

SCALE: NONE | SHEET 1 OF 1 SHEETS | STA. TO STA.

F.A.I RTE.	SECTION	COUNTY	TOTAL SHEETS	SHEET NO.
57	99-1H8-2-BR	WILL	133	132
	TC-21	CONTRACT NO. 60R76		
		ILLINOIS	FED. AID PROJECT	

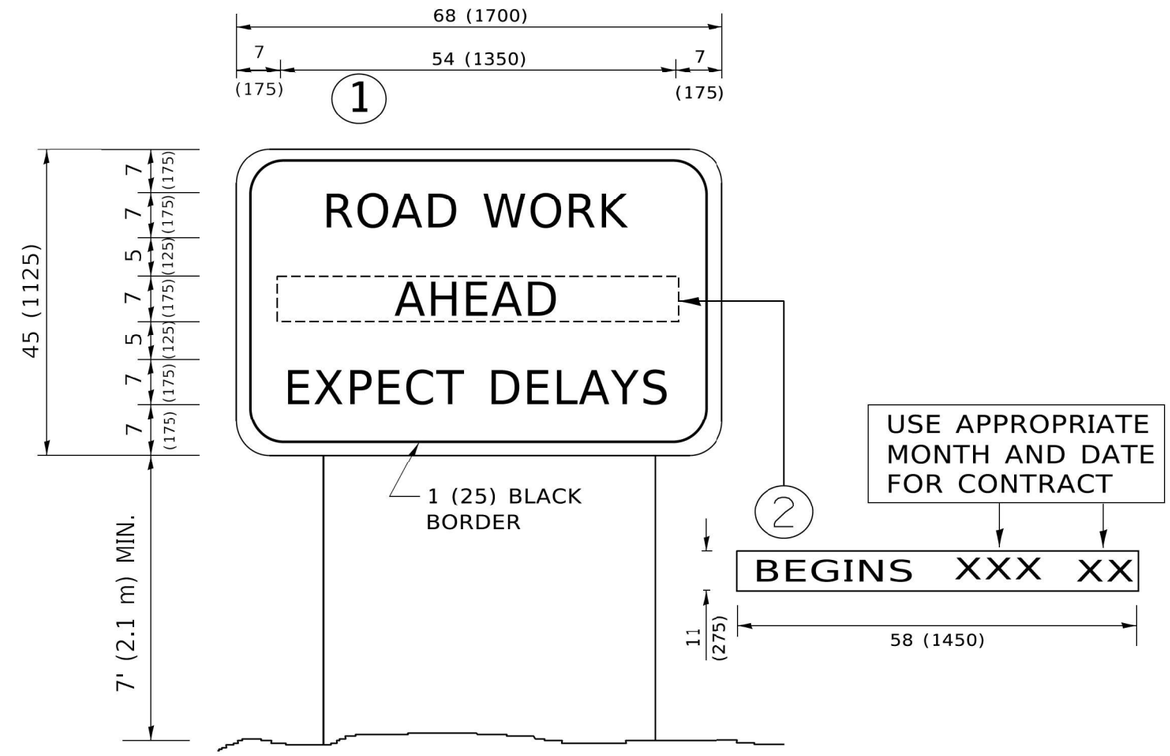

NOTES:

1. USE BLACK LETTERING ON ORANGE BACKGROUND.
2. ERECT SIGNS IN ADVANCE OF THE LOCATION FOR THE "ROAD CONSTRUCTION AHEAD" SIGN AT LOCATIONS AS DIRECTED BY THE ENGINEER.
3. ERECT SIGN (1) WITH INSTALLED PANEL (2) ONE WEEK PRIOR TO THE START OF CONSTRUCTION.
4. REMOVE PANEL (2) SOON AFTER THE START OF CONSTRUCTION.
5. SEE SPECIAL PROVISION FOR "TEMPORARY INFORMATION SIGNING" FOR ADDITIONAL INFORMATION.
6. ONE SIGN ASSEMBLY EQUALS 25.70 SQ. FT. (2.3 SQ. M.)
7. SHALL BE PAID FOR AS TEMPORARY INFORMATION SIGNING.

ALL DIMENSIONS ARE IN INCHES (MILLIMETERS) UNLESS OTHERWISE SHOWN.

MODE: Default
FILE NAME: pw:\\IL084EBDINTEG.illinois.gov:PWIDOT\Documents\IDOT Offices\District 1\Projects\Dist5\d22x34\CADdata\CADsheets\tc22.dgn

AEG ATLAS ENGINEERING GROUP, LTD.	USER NAME = footemj	DESIGNED -	REVISED - R. MIRS 09-15-97	STATE OF ILLINOIS DEPARTMENT OF TRANSPORTATION	ARTERIAL ROAD INFORMATION SIGN
		DRAWN -	REVISED - R. MIRS 12-11-97		
	PLOT SCALE = 50.0000 ' / in.	CHECKED -	REVISED - T. RAMMACHER 02-02-99		
	PLOT DATE = 3/4/2019	DATE -	REVISED - C. JUCIUS 01-31-07		SCALE: NONE SHEET 1 OF 1 SHEETS STA. TO STA.

F.A.I RTE.	SECTION	COUNTY	TOTAL SHEETS	SHEET NO.
57	99-1HB-2-BR	WILL	133	133
TC-22		CONTRACT NO. 60R76		
		ILLINOIS FED. AID PROJECT		