06-13-2025 LETTING ITEM 055

F.A.P. RTE.	SECTION	COUNTY	TOTAL SHEETS	SHEET NO.
553	(125BR)ES	DEKALB	96	1
	ILLINOIS	CONTRACT NO. 66K63		

STATE OF ILLINOIS
DEPARTMENT OF TRANSPORTATION

P-93-006-20
D-93-087-24

FOR INDEX OF SHEETS, SEE SHEET NO. 2
FOR LIST OF HIGHWAY STANDARDS, SEE SHEET NO. 2

PROPOSED HIGHWAY PLANS

FAP ROUTE 553 (IL 72)
SECTION (125BR)BR
PROJECT BR-Q1EE(314)
BRIDGE SUPERSTRUCTURE REPLACEMENT
DEKALB COUNTY

C–93–126–24

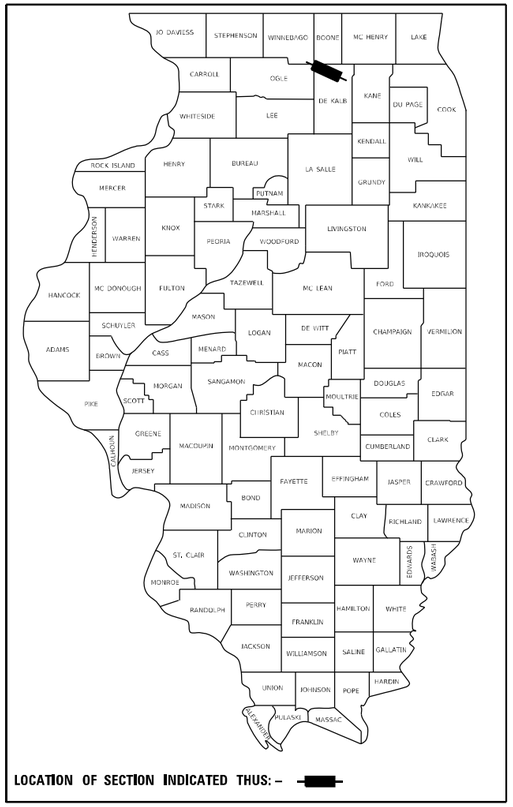

LOCATION OF SECTION INDICATED THUS:–

BEGIN PROJECT (QUARRY RD)
STA 10 + 00.00

BEGIN PROJECT (IL 72)
STA 296 + 30.00

SUPERSTRUCTURE REPLACEMENT
(OVER OWENS CREEK)
STA. 303 + 30.00
S.N. 019–0030

END PROJECT (IL 72)
STA 310 + 00.00

END PROJECT (QUARRY RD)
STA 11 + 26.30

STA 300 + 96.52 (IL 72) =
STA 10 + 00.00 (QUARRY RD)

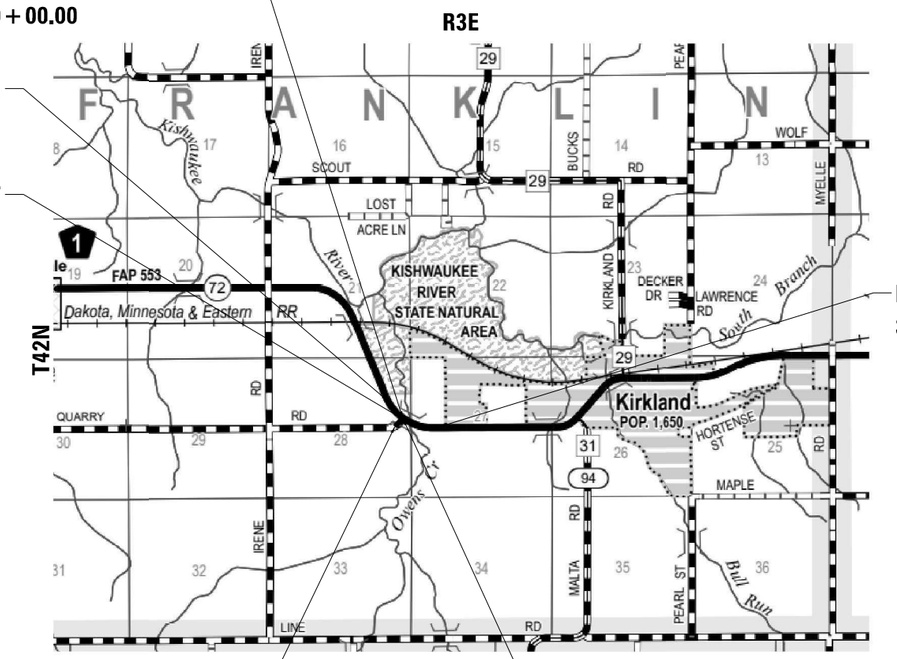

LOCATION MAP
NOT TO SCALE

TRAFFIC DATA – IL 72

MINOR ARTERIAL (CLASS II TRUCK ROUTE)
2021 ADT = 2350 PROJ. 2025 ADT = 2914
P.V. = 83.4% S.U. = 7.5% M.U. = 9.1%
POSTED SPEED = 55 MPH
DESIGN SPEED = 55 MPH

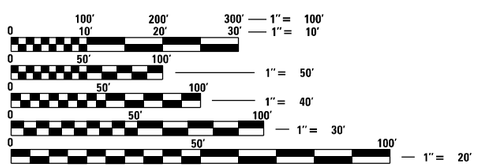

FULL SIZE PLANS HAVE BEEN PREPARED USING STANDARD ENGINEERING SCALES. REDUCED SIZED PLANS WILL NOT CONFORM TO STANDARD SCALES. IN MAKING MEASUREMENTS ON REDUCED PLANS, THE ABOVE SCALES MAY BE USED.

J.U.L.I.E.
JOINT UTILITY LOCATION INFORMATION FOR EXCAVATORS
1–800–892–0123
OR 811

STATE OF ILLINOIS
DEPARTMENT OF TRANSPORTATION

SUBMITTED March 20, 2025
Trisha Thompson
REGIONAL ENGINEER

May 9, 2025
ENGINEER OF DESIGN AND ENVIRONMENT

May 9, 2025
DIRECTOR OF HIGHWAYS, PROJECT IMPLEMENTATION

GROSS LENGTH = 1370.00 FT. = 0.259 MILE
NET LENGTH = 1370.00 FT. = 0.259 MILE

EFK•Moen Civil Engineering Design

OATES ASSOCIATES
www.oatesassociates.com
ILLINOIS DESIGN FIRM LICENSE NO.: 184.001115

DISTRICT 3 NO. (815) 434–6131
PROJECT ENGINEER: DAVID S. ALEXANDER, P.E.
UNIT CHIEF: STEPHENIE CARMIN
TOWNSHIP(S): FRANKLIN TOWNSHIP
CONTRACT NO. 66K63

PRINTED BY THE AUTHORITY
OF THE STATE OF ILLINOIS

REV. 4/2/25

INDEX OF SHEETS

HIGHWAY STANDARDS

000001-08	STANDARD SYMBOLS, ABBREVIATIONS AND PATTERNS
001001-02	AREAS OF REINFORCEMENT BARS
001006	DECIMAL OF AN INCH AND OF A FOOT
280001-07	TEMPORARY EROSION CONTROL SYSTEMS
420406	PAVEMENT CONNECTOR (HMA) FOR BRIDGE APPROACH SLAB
482001-02	HMA SHOULDER ADJACENT TO FLEXIBLE PAVEMENT
515001-04	NAME PLATE FOR BRIDGES
542401-04	METAL FLARED END SECTION FOR PIPE CULVERTS
542411	SLOPED METAL END SECTIONS FOR PIPE CULVERTS 15" (375 MM) THRU 60" (1500 MM) DIAMETER
601001-05	PIPE UNDERDRAINS
601101-02	CONCRETE HEADWALL FOR PIPE UNDERDRAINS
630001-13	STEEL PLATE BEAM GUARDRAIL
630201-07	PCC/HMA STABILIZATION AT STEEL PLATE BEAM GUARDRAIL
630301-09	SHOULDER WIDENING FOR TYPE 1 (SPECIAL) GUARDRAIL TERMINALS
631031-18	TRAFFIC BARRIER TERMINAL, TYPE 6
635001-02	DELINEATORS
642006-01	SHOULDER RUMBLE STRIPS, 8 IN.
701001-02	OFF-ROAD OPERATIONS, 2L, 2W, MORE THAN 15' (4.5 M) AWAY
701006-05	OFF-ROAD OPERATIONS, 2L, 2W, 15' (4.5 M) TO 24" (600 MM) FROM PAVEMENT EDGE
701011-04	OFF-ROAD MOVING OPERATIONS, 2L, 2W, DAY ONLY
701301-04	LANE CLOSURE, 2L, 2W, SHORT TIME OPERATIONS
701306-04	LANE CLOSURE, 2L, 2W, SLOW MOVING OPERATIONS DAY ONLY, FOR SPEEDS >= 45 MPH
701311-03	LANE CLOSURE, 2L, 2W, MOVING OPERATIONS - DAY ONLY
701321-19	LANE CLOSURE, 2L, 2W, BRIDGE REPAIR WITH BARRIER
701326-04	LANE CLOSURE, 2L, 2W, PAVEMENT WIDENING, FOR SPEEDS >= 45 MPH
701901-10	TRAFFIC CONTROL DEVICES
704001-08	TEMPORARY CONCRETE BARRIER
720001-01	SIGN PANEL MOUNTING DETAILS
720006-04	SIGN PANEL ERECTION DETAILS
720011-01	METAL POSTS FOR SIGNS, MARKERS AND DELINEATORS
725001-01	OBJECT AND TERMINAL MARKERS
780001-05	TYPICAL PAVEMENT MARKINGS
781001-04	TYPICAL APPLICATIONS RAISED REFLECTIVE PAVEMENT MARKERS
782006-01	GUARDRAIL AND BARRIER WALL REFLECTOR MOUNTING DETAILS
BLR 21-9	TYPICAL APPLICATION OF TRAFFIC CONTROL DEVICES FOR CONSTRUCTION ON RURAL LOCAL HIGHWAYS

MARIA SLICK
062-070645
LICENSED
PROFESSIONAL
ENGINEER
OF
ILLINOIS

Signed: Maria Slick
Date: 3/12/2025
License Expires: 11/30/2025

The seal shown above is valid for Sheets 1-39, and 82-96.

LICENSED STRUCTURAL ENGINEER
DANIEL
GEORGE LUTZ
081 006772
STATE OF ILLINOIS

Signed: Daniel Lutz
Date: 3/12/2025
License Expires: 11/30/2026

The seal shown above is valid for Sheets 40-81.

STATE OF ILLINOIS
DEPARTMENT OF TRANSPORTATION
DISTRICT THREE
AS BUILT INFORMATION

SUPERVISING CONSTRUCTION FIELD ENGINEER

RESIDENT ENGINEER / TECHNICIAN

START & END DATES OF CONSTRUCTION:

INSPECTORS:

MODEL: Default
FILE NAME: Z:\22057_12 IDOT D3 PTB 204-028 WO 12 IL 72 @ Owens\DGN\Design\Prelim\Plansheets\0366K63-sht-genrnote.dgn

EFK♦Moen
Civil Engineering Design

USER NAME = skierpiec	DESIGNED - SK	REVISED -	
	DRAWN - SK	REVISED -	
PLOT SCALE = 100.0000 ' / in.	CHECKED - JH	REVISED -	
PLOT DATE = 3/24/2025	DATE - 3/24/2025	REVISED -	

STATE OF ILLINOIS
DEPARTMENT OF TRANSPORTATION

IL 72 OVER OWENS CREEK
INDEX OF SHEETS AND HIGHWAY STANDARDS

SCALE: SHEET OF SHEETS STA. TO STA.

F.A.P. RTE.	SECTION	COUNTY	TOTAL SHEETS	SHEET NO.
553	(125BR)ES	DEKALB	96	2
		CONTRACT NO. 66K63		
	ILLINOIS	FED. AID PROJECT		

GENERAL NOTES

1. THE HMA SURFACE OF ALL MAILBOX TURNOUTS, PRIVATE ENTRANCES, COMMERCIAL ENTRANCES, AND SIDE ROADS SHALL BE MADE NEATLY, IN A WORKMANLIKE MANNER AND SHALL ACCURATELY CONFORM TO THE SHAPES AND DIMENSIONS SHOWN ON THE PLAN DETAILS. IF REQUIRED BY THE ENGINEER, THE CONTRACTOR SHALL SAW CUT THE HMA SURFACE TO CONFORM TO THE SHAPES AND DIMENSIONS SHOWN ON THE PLAN DETAILS. THIS WORK WILL BE INCLUDED IN THE COST OF THE HMA SURFACE.

2. EXCEPT AS NOTED ON THE PLANS, PAVEMENT GRADES SHOWN ARE AT THE TOP OF PAVEMENT SURFACES.

3. BEFORE ORDERING PIPE CULVERTS OR PIPE DRAINS, THE CONTRACTOR SHALL CONSULT THE ENGINEER FOR EXACT LENGTHS.

4. THE ENGINEER WILL BE THE SOLE JUDGE CONCERNING CURING TIME FOR THE VARIOUS HMA LIFTS.

5. ON EXISTING PAVEMENT WHICH MAY BE SUPERELEVATED, THE NEW HMA PAVEMENT SHALL BE BUILT WITH THE SAME SUPERELEVATION UNLESS NEW SUPERELEVATION RATES ARE GIVEN ON THE PLANS.

6. ALL ELEVATIONS REFERRING TO U.S.G.S. MEAN SEA LEVEL DATUM.

7. THE FOLLOWING RATES OF APPLICATION HAVE BEEN USED IN CALCULATING PLAN QUANTITIES:

GRANULAR MATERIALS	2.05	TONS / CU YD
HMA RESURFACING	112	LBS / SQ YD / IN
SHORT TERM PAVEMENT MARKING	10	FT / 100 FT OF APPLICATION

8. MEMBERS OF JULIE KNOWN TO BE WITHIN THE LIMITS OF THE IMPROVEMENT ARE:
   - COMED
   - FRONTIER
   - NICOR
   - MEDIACOM
   - IFIBER

9. THE CONTRACTOR SHALL CONTACT JULIE AT LEAST 48 HOURS PRIOR TO EXCAVATION TO DETERMINE WHICH UTILITIES ARE IN THE AREA.

10. ONLY THOSE TREES DESIGNATED BY THE ENGINEER OR LISTED IN THE TREE REMOVAL SCHEDULE SHALL BE REMOVED. THE CONTRACTOR SHALL PROTECT ALL REMAINING TREES FROM DAMAGE TO THEIR OPERATIONS.

11. THE CONTRACTOR SHALL COORDINATE CONSTRUCTION ACTIVITIES WITH UTILITIES, VILLAGE OF KIRKLAND, FRANKLIN TOWNSHIP, ALL EMERGENCY SERVICES, SCHOOL DISTRICTS, AND OTHER AGENCIES AFFECTED BY THE CLOSURE.

COMMITMENTS

1. TREES (3) INCHES OR GREATER IN DIAMETER AT BREAST HEIGHT SHALL NOT BE CLEARED BETWEEN APRIL 1ST AND SEPTEMBER 30TH.

2. COMBINATION OF SILT AND HIGH VISIBILITY FENCE ARE REQUIRED TO PROTECT THE WETLAND SITES IDENTIFIED IN THE EROSION AND SEDIMENT CONTROL PLAN.

3. THE CONTRACTOR SHALL CONTACT MR. JARED POYNTER, HIAWATHA SCHOOL DISTRICT 426 SUPERINTENDENT, AT (815) 522-6676 A MINIMUM OF TWO (2) WEEKS PRIOR TO THE PROPOSED CLOSURE OF QUARRY ROAD SO THAT MR. POYNTER CAN COORDINATE BUS RE-ROUTING EFFORTS DURING THE CONSTRUCTION.

HMA MIXTURE REQUIREMENT TABLE

LOCATIONS:	IL 72 HMA FULL-DEPTH PAVEMENT			IL 72 HMA SHOULDERS		QUARRY RD HMA PAVEMENT		TEMPORARY RAMP SPECIAL	TEMPORARY PAVEMENT	
MIXTURE USE(S):	HMA SURFACE COURSE	HMA BINDER TOP LIFT	HMA BINDER BOTTOM LIFT(S)	HMA SURFACE COURSE	HMA BINDER BOTTOM LIFT(S)	HMA SURFACE COURSE	HMA BINDER BOTTOM LIFT(S)	HMA BINDER LIFT(S)	HMA SURFACE COURSE	HMA BINDER BOTTOM LIFT(S)
BINDER GRADE (PG):	PG 64-22	PG 64-22	PG 64-22	PG 64-22	PG 64-22	PG 64-22	PG 64-22	PG 64-22	PG 64-22	PG 64-22
DESIGN AIR VOIDS:	4.0% @ N50	4.0% @ N50	4.0% @ N50	4.0% @ N50	4.0% @ N50	4.0% @ N50	4.0% @ N50	4.0% @ N50	4.0% @ N50	4.0% @ N50
MIXTURE COMPOSITION: (MIXTURE GRADATION)	IL-9.5	IL-19.0	IL-19.0	IL-9.5	IL-19.0	IL-9.5	IL-19.0	IL-9.5	IL-9.5	IL-19.0
FRICTION AGGREGATE:	MIXTURE C	N/A	N/A	MIXTURE C	N/A	MIXTURE C	N/A	N/A	MIXTURE C	N/A
MIXTURE WEIGHT:	112.0 LB/SY/IN	112.0 LB/SY/IN	112.0 LB/SY/IN	112.0 LB/SY/IN	112.0 LB/SY/IN	112.0 LB/SY/IN	112.0 LB/SY/IN	112.0 LB/SY/IN	112.0 LB/SY/IN	112.0 LB/SY/IN
QUALITY MANAGEMENT PROGRAM:	QC/QA	QC/QA	QC/QA	QC/QA	QC/QA	QC/QA	QC/QA	QC/QA	QC/QA	QC/QA
SUBLOT SIZE:	N/A	N/A	N/A	N/A	N/A	N/A	N/A	N/A	N/A	N/A
DENSITY TEST METHOD:	CORES/NUCLEAR	CORES/NUCLEAR	CORES/NUCLEAR	CORES/NUCLEAR	CORES/NUCLEAR	CORES/NUCLEAR	CORES/NUCLEAR	SATISFACTION OF ENGINEER	SATISFACTION OF ENGINEER	SATISFACTION OF ENGINEER
MATERIAL TRANSFER DEVICE (REQUIRED):	NO	NO	NO	NO	NO	NO	NO	NO	NO	NO

CODE NO.	ITEM	UNIT	TOTAL QUANTITY	CONSTR. CODE 80% FED 20% STATE BRIDGE 0013 S.N. 019-0030
20100110	TREE REMOVAL (6 TO 15 UNITS DIAMETER)	UNIT	222	222
20100210	TREE REMOVAL (OVER 15 UNITS DIAMETER)	UNIT	183	183
20101000	TEMPORARY FENCE	FOOT	738	738
20200100	EARTH EXCAVATION	CU YD	2070	2070
** 20201200	REMOVAL AND DISPOSAL OF UNSUITABLE MATERIAL	CU YD	110	110
20400800	FURNISHED EXCAVATION	CU YD	895	895
20800150	TRENCH BACKFILL	CU YD	293	293
21101505	TOPSOIL EXCAVATION AND PLACEMENT	CU YD	805	805
25000210	SEEDING, CLASS 2A	ACRE	0.25	0.25
25000300	SEEDING, CLASS 3	ACRE	0.75	0.75
25000400	NITROGEN FERTILIZER NUTRIENT	POUND	78	78
25000500	PHOSPHORUS FERTILIZER NUTRIENT	POUND	78	78
25000600	POTASSIUM FERTILIZER NUTRIENT	POUND	78	78
25100630	EROSION CONTROL BLANKET	SQ YD	773	773

* DENOTES SPECIAL PROVISION REQUIRED

* * DENOTES SPECIALTY ITEM

CODE NO.	ITEM	UNIT	TOTAL QUANTITY	CONSTR. CODE BFP 100% FED BRIDGE 0013 S.N. 019-0030
25100635	HEAVY DUTY EROSION CONTROL BLANKET	SQ YD	3404	3404
28000250	TEMPORARY EROSION CONTROL SEEDING	POUND	259	259
28000305	TEMPORARY DITCH CHECKS	FOOT	53	53
28000400	PERIMETER EROSION BARRIER	FOOT	2199	2199
28000500	INLET AND PIPE PROTECTION	EACH	2	2
28100107	STONE RIPRAP, CLASS A4	SQ YD	1106	1106
28200200	FILTER FABRIC	SQ YD	1106	1106
30300112	AGGREGATE SUBGRADE IMPROVEMENT 12"	SQ YD	4993	4993
35102400	AGGREGATE BASE COURSE, TYPE B 12"	SQ YD	425	425
40200800	AGGREGATE SURFACE COURSE, TYPE B	TON	41	41
40201000	AGGREGATE FOR TEMPORARY ACCESS	TON	24	24
40600275	BITUMINOUS MATERIALS (PRIME COAT)	POUND	12189	12189
40600290	BITUMINOUS MATERIALS (TACK COAT)	POUND	3122	3122
40600370	LONGITUDINAL JOINT SEALANT	FOOT	1118	1118

* DENOTES SPECIAL PROVISION REQUIRED

** DENOTES SPECIALTY ITEM

CODE NO.	ITEM	UNIT	TOTAL QUANTITY	CONSTR. CODE BFP 100% FED BRIDGE 0013 S.N. 019-0030
40600990	TEMPORARY RAMP	SQ YD	32	32
40603080	HOT-MIX ASPHALT BINDER COURSE, IL-19.0, N50	TON	46	46
40604050	HOT-MIX ASPHALT SURFACE COURSE, IL-9.5, MIX "C", N50	TON	30	30
40701876	HOT-MIX ASPHALT PAVEMENT (FULL-DEPTH), 9 3/4"	SQ YD	2977	2977
42000070	PAVEMENT CONNECTOR (HMA) FOR BRIDGE APPROACH SLAB	SQ YD	186	186
44000100	PAVEMENT REMOVAL	SQ YD	3394	3394
44004250	PAVED SHOULDER REMOVAL	SQ YD	603	603
48101618	AGGREGATE SHOULDERS, TYPE B 9 3/4"	SQ YD	275	275
48203036	HOT-MIX ASPHALT SHOULDERS, 9 3/4"	SQ YD	1424	1424
50101500	REMOVAL OF EXISTING SUPERSTRUCTURES	EACH	1	1
50102400	CONCRETE REMOVAL	CU YD	29.0	29.0
50105220	PIPE CULVERT REMOVAL	FOOT	86	86
50200100	STRUCTURE EXCAVATION	CU YD	40	40
50300225	CONCRETE STRUCTURES	CU YD	60.9	60.9

* DENOTES SPECIAL PROVISION REQUIRED

\+ DENOTES SPECIALTY ITEM

CODE NO.	ITEM	UNIT	TOTAL QUANTITY	CONSTR. CODE BFP 100% FED BRIDGE 0013 S.N. 019-0030
50300255	CONCRETE SUPERSTRUCTURE	CU YD	205.9	205.9
50300260	BRIDGE DECK GROOVING	SQ YD	707	707
50300300	PROTECTIVE COAT	SQ YD	968	968
50301350	CONCRETE SUPERSTRUCTURE (APPROACH SLAB)	CU YD	98.9	98.9
50500105	FURNISHING AND ERECTING STRUCTURAL STEEL	L SUM	1	1
50500505	STUD SHEAR CONNECTORS	EACH	3960	3960
50800205	REINFORCEMENT BARS, EPOXY COATED	POUND	95340	95340
50800515	BAR SPLICERS	EACH	723	723
51500100	NAME PLATES	EACH	1	1
52000110	PREFORMED JOINT STRIP SEAL	FOOT	95.0	95.0
52100510	ANCHOR BOLTS, 3/4"	EACH	96	96
52200010	TEMPORARY SHEET PILING	SQ FT	178	178
54213681	PRECAST REINFORCED CONCRETE FLARED END SECTIONS 36"	EACH	2	2
54260415	SLOPED METAL END SECTION, STANDARD 542411, 15", 1:4	EACH	1	1

* DENOTES SPECIAL PROVISION REQUIRED

\+ DENOTES SPECIALTY ITEM

CODE NO.	ITEM	UNIT	TOTAL QUANTITY	CONSTR. CODE BFP 100% FED BRIDGE 0013 S.N. 019-0030
54260615	SLOPED METAL END SECTION WITH GRATE, STANDARD 542411, 15", 1:4	EACH	1	1
542D1060	PIPE CULVERTS, CLASS D, TYPE 2 15"	FOOT	61	61
542D1081	PIPE CULVERTS, CLASS D, TYPE 2 36"	FOOT	64	64
58600101	GRANULAR BACKFILL FOR STRUCTURES	CU YD	40	40
58700300	CONCRETE SEALER	SQ FT	1122	1122
59000200	EPOXY CRACK INJECTION	FOOT	21	21
59300100	CONTROLLED LOW-STRENGTH MATERIAL	CU YD	0.7	0.7
60100060	CONCRETE HEADWALLS FOR PIPE DRAINS	EACH	2	2
60108100	PIPE UNDERDRAINS 4" (SPECIAL)	FOOT	30	30
60108501	PIPE UNDERDRAINS, TYPE 3	FOOT	1035	1035
60500060	REMOVING INLETS	EACH	2	2
* * 63000003	STEEL PLATE BEAM GUARDRAIL, TYPE A, 9 FOOT POSTS	FOOT	800.0	800.0
* * 63100085	TRAFFIC BARRIER TERMINAL, TYPE 6	EACH	4	4
* * 63100167	TRAFFIC BARRIER TERMINAL, TYPE 1 (SPECIAL) TANGENT	EACH	5	5

* DENOTES SPECIAL PROVISION REQUIRED

* * DENOTES SPECIALTY ITEM

	CODE NO.	ITEM	UNIT	TOTAL QUANTITY	CONSTR. CODE BFP 100% FED BRIDGE 0013 S.N. 019-0030
**	63100169	TRAFFIC BARRIER TERMINAL, TYPE 1 (SPECIAL) FLARED	EACH	1	1
	63200310	GUARDRAIL REMOVAL	FOOT	1427	1427
	63500105	DELINEATORS	EACH	21	21
	64200108	SHOULDER RUMBLE STRIPS, 8 INCH	FOOT	2144	2144
**	66900200	NON-SPECIAL WASTE DISPOSAL	CU YD	444	444
**	66900530	SOIL DISPOSAL ANALYSIS	EACH	1	1
**	66901001	REGULATED SUBSTANCES PRE-CONSTRUCTION PLAN	L SUM	1	1
**	66901003	REGULATED SUBSTANCES FINAL CONSTRJCTION REPORT	L SUM	1	1
**	66901006	REGULATED SUBSTANCES MONITORING	CAL DA	15	15
	67000400	ENGINEER'S FIELD OFFICE, TYPE A	CAL MO	12	12
	67100100	MOBILIZATION	L SUM	1	1
	70100405	TRAFFIC CONTROL AND PROTECTION, STANDARD 701321	EACH	1	1
	70100460	TRAFFIC CONTROL AND PROTECTION, STANDARD 701306	L SUM	1	1
	70100500	TRAFFIC CONTROL AND PROTECTION, STANDARD 701326	L SUM	1	1

* DENOTES SPECIAL PROVISION REQUIRED

** DENOTES SPECIALTY ITEM

MODEL: Default
FILE NAME: P:\2037.12 IDOT D3 PTB 204-028 WO 12 IL 72 o' Owens\DGN\Design\Preliminr\Bcsheets\D36K63-sht-SQQ.dgn

CODE NO.	ITEM	UNIT	TOTAL QUANTITY	CONSTR. CODE BFP 100% FED BRIDGE 0013 S.N. 019-0030
70103815	TRAFFIC CONTROL SURVEILLANCE	CAL DA	111	111
70106500	TEMPORARY BRIDGE TRAFFIC SIGNALS	EACH	1	1
70106700	TEMPORARY RUMBLE STRIPS	EACH	15	15
70300100	SHORT TERM PAVEMENT MARKING	FOOT	606	606
70300150	SHORT TERM PAVEMENT MARKING REMOVAL	SQ FT	226	226
70307210	TEMPORARY PAVEMENT MARKING - LINE 24"- TYPE IV TAPE	FOOT	23	23
70400100	TEMPORARY CONCRETE BARRIER	FOOT	1625.0	1625.0
70400125	PINNING TEMPORARY CONCRETE BARRIER	EACH	624	624
70400200	RELOCATE TEMPORARY CONCRETE BARRIER	FOOT	1575.0	1575.0
70600260	IMPACT ATTENUATORS, TEMPORARY (FULLY REDIRECTIVE, NARROW), TEST LEVEL 3	EACH	2	2
70600332	IMPACT ATTENUATORS, RELOCATE (FULLY REDIRECTIVE, NARROW), TEST LEVEL 3	EACH	2	2
** 72000100	SIGN PANEL - TYPE 1	SQ FT	52	52
** 72400100	REMOVE SIGN PANEL ASSEMBLY - TYPE A	EACH	4	4
** 72400310	REMOVE SIGN PANEL - TYPE 1	SQ FT	26	26

* DENOTES SPECIAL PROVISION REQUIRED

** DENOTES SPECIALTY ITEM

MODEL: Default
FILE NAME: P:\22037.12 IDOT D3 PTB 204-028 WO 12 IL 72 o' Owens\DGN\Design\Prelim\Rbrsheets\D36K63-sht-500.dgn

EFK♦Moen Civil Engineering Design

USER NAME = skierpiec	DESIGNED - SK	REVISED -	
	DRAWN - SK	REVISED -	
PLOT SCALE = 100.0000 ' / in.	CHECKED - JH	REVISED -	
PLOT DATE = 3/24/2025	DATE - 3/24/2025	REVISED -	

STATE OF ILLINOIS
DEPARTMENT OF TRANSPORTATION

IL 72 OVER OWENS CREEK
SUMMARY OF QUANTITIES

SCALE: SHEET OF SHEETS STA. TO STA.

F.A.P. RTE.	SECTION	COUNTY	TOTAL SHEETS	SHEET NO.
553	(125BR)ES	DEKALB	96	10

CONTRACT NO. 66K63

ILLINOIS FED. AID PROJECT

REV. 5/8/25

	CODE NO.	ITEM	UNIT	TOTAL QUANTITY	CONSTR. CODE BFP 100% FED BRIDGE 0013 S.N. 019-0030
**	72501000	TERMINAL MARKER - DIRECT APPLIED	EACH	6	6
**	73000100	WOOD SIGN SUPPORT	FOOT	131	131
**	78009004	MODIFIED URETHANE PAVEMENT MARKING - LINE 4"	FOOT	15051	15051
**	78009006	MODIFIED URETHANE PAVEMENT MARKING - LINE 6"	FOOT	218	218
**	78011025	GROOVING FOR RECESSED PAVEMENT MARKING 5"	FOOT	7526	7526
**	78011035	GROOVING FOR RECESSED PAVEMENT MARKING 7"	FOOT	109	109
**	78100100	RAISED REFLECTIVE PAVEMENT MARKER	EACH	18	18
**	78200005	GUARDRAIL REFLECTORS, TYPE A	EACH	21	21
**	78200011	BARRIER WALL REFLECTORS, TYPE C	EACH	12	12
	78300200	RAISED REFLECTIVE PAVEMENT MARKER REMOVAL	EACH	18	18
	78300202	PAVEMENT MARKING REMOVAL - WATER BLASTING	SQ FT	1169	1169
	X4060995	TEMPORARY RAMP (SPECIAL)	SQ YD	372	372
	X5080530	BAR TERMINATORS	EACH	54	54
	X5211410	HIGH LOAD MULTI-ROTATIONAL BEARINGS, DISC, FIXED-200K	EACH	12	12

* DENOTES SPECIAL PROVISION REQUIRED

\+ DENOTES SPECIALTY ITEM

MODEL: Default
FILE NAME: P:\22037.12 IDOT D3 PTB 204-028 WO 12 IL 72 o' Owens\DGN\Design\Preliminary\Sheets\0366K63-sht-SOQ.dgn

EFK•Moen Civil Engineering Design

USER NAME = skierpiec	DESIGNED - SK	REVISED -	
	DRAWN - SK	REVISED -	
PLOT SCALE = 100.0000 ' / in.	CHECKED - JH	REVISED -	
PLOT DATE = 3/24/2025	DATE - 3/24/2025	REVISED -	

STATE OF ILLINOIS
DEPARTMENT OF TRANSPORTATION

IL 72 OVER OWENS CREEK
SUMMARY OF QUANTITIES

SCALE: SHEET OF SHEETS STA. TO STA.

F.A.P. RTE.	SECTION	COUNTY	TOTAL SHEETS	SHEET NO.
553	(125BR)ES	DEKALB	96	11

CONTRACT NO. 66K63

ILLINOIS FED. AID PROJECT

REV. 5/8/25

CODE NO.	ITEM	UNIT	TOTAL QUANTITY	CONSTR. CODE BFP 100% FED BRIDGE 0013 S.N. 019-0030
X5211605	HIGH LOAD MULTI-ROTATIONAL BEARINGS, DISC, GUIDED EXPANSION-100K	EACH	12	12
X5230174	DRAINAGE SCUPPERS, DS-11	EACH	1	1
X5427602	REMOVE EXISTING FLARED END SECTION	EACH	2	2
X6350120	DELINEATOR REMOVAL	EACH	11	11
X6350204	LINEAR DELINEATOR PANELS, 4 INCH	EACH	24	24
X6350206	LINEAR DELINEATOR PANELS, 6 INCH	EACH	6	6
X6650208	WOVEN WIRE FENCE REMOVAL AND REPLACEMENT	FOOT	515	515
X7011800	TRAFFIC CONTROL AND PROTECTION, STANDARD BLR 21	L SUM	1	1
X7200061	TEMPORARY INFORMATION SIGNING	SQ FT	84	84
X7830050	RAISED REFLECTIVE PAVEMENT MARKER, REFLECTOR REMOVAL	EACH	8	8
X7830052	RAISED REFLECTIVE PAVEMENT MARKER, REFLECTOR REPLACEMENT	EACH	8	8
Z0001495	BRIDGE APPROACH SHOULDER REMOVAL	SQ YD	32	32
Z0004552	APPROACH SLAB REMOVAL	SQ YD	174	174
Z0012754	STRUCTURAL REPAIR OF CONCRETE (DEPTH EQUAL TO OR LESS THAN 5 INCHES)	SQ FT	2	2

* DENOTES SPECIAL PROVISION REQUIRED

\+ DENOTES SPECIALTY ITEM

CODE NO.	ITEM	UNIT	TOTAL QUANTITY	CONSTR. CODE BFP 100% FED BRIDGE 0013 S.N. 019-0030
Z0013798	CONSTRUCTION LAYOUT	L SUM	1	1
Z0062456	TEMPORARY PAVEMENT	SQ YD	462	462
Ø Z0076600	TRAINEES	HOUR	500	500
Ø Z0076604	TRAINEES - TRAINING PROGRAM GRADUATE	HOUR	500	500

Ø 0042

* DENOTES SPECIAL PROVISION REQUIRED

\+ DENOTES SPECIALTY ITEM

MODEL: Default
FILE NAME: J:\22037.12 IDOT D3 PTB 204-028 WO 12 IL 72 o' Owens\DGN\Design\Preliminary\Sheets\036K63-sht-SOQ.dgn

EFK♦Moen
Civil Engineering Design

USER NAME = skierpiec	DESIGNED - SK	REVISED -	
	DRAWN - SK	REVISED -	
PLOT SCALE = 100.0000 ' / in.	CHECKED - JH	REVISED -	
PLOT DATE = 3/24/2025	DATE - 3/24/2025	REVISED -	

STATE OF ILLINOIS
DEPARTMENT OF TRANSPORTATION

IL 72 OVER OWENS CREEK
SUMMARY OF QUANTITIES

SCALE: SHEET OF SHEETS STA. TO STA.

F.A.P. RTE.	SECTION	COUNTY	TOTAL SHEETS	SHEET NO.
553	(125BR)ES	DEKALB	96	13

CONTRACT NO. 66K63

ILLINOIS FED. AID PROJECT

REV. 5/8/25REV. 4/23/25

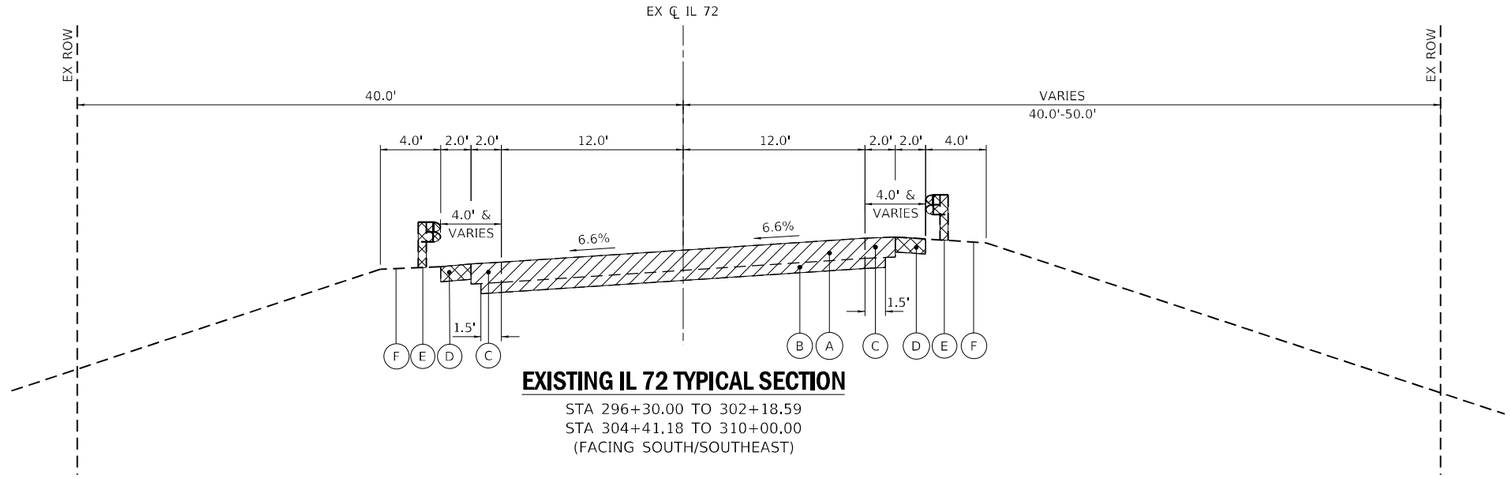

EXISTING IL 72 TYPICAL SECTION

STA 296+30.00 TO 302+18.59
STA 304+41.18 TO 310+00.00
(FACING SOUTH/SOUTHEAST)

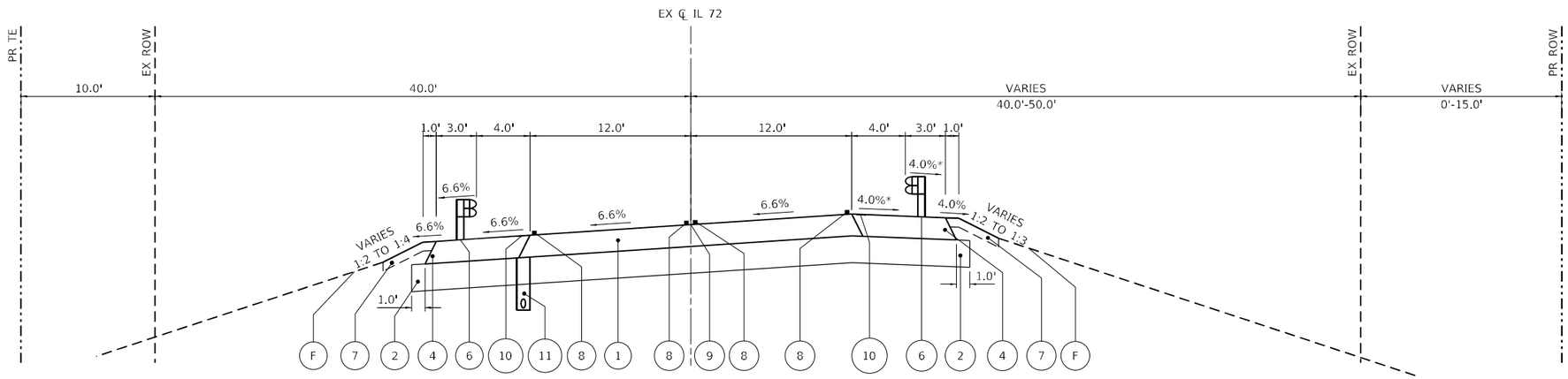

PROPOSED IL 72 TYPICAL SECTION

STA 296+30.00 TO 302+18.59
STA 304+41.18 TO 310+00.00
(FACING SOUTH/SOUTHEAST)

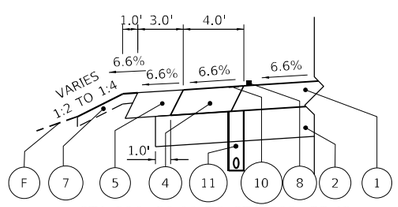

STA 296+30.00 TO STA 299+77.43
STA 308+12.50 TO STA 310+00.00

* PAVED SHOULDERS (HIGH SIDE) TRANSITIONS AT THE SIDE ROAD AND BRIDGE APPROACHES.
STA 300+12.24 @ -4.0% TO STA 300+42.24 @ -1.0% (30' TRANSITION)
STA 301+50.04 @ -1.0% TO STA 302+31.94 @ +6.6% (81.9' TRANSITION)
STA 304+55.25 @ +6.6% TO STA 305+61.25 @ -4.0% (106' TRANSITION)

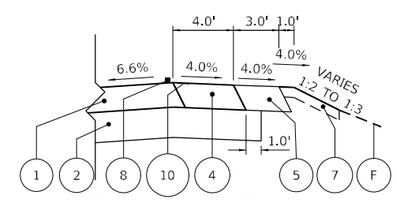

STA 296+30.00 TO STA 297+17.21
STA 307+24.98 TO STA 310+00.00

LEGEND

- (A) EX PCC PAVEMENT REINFORCED JOINTED, 8"
- (B) EX HMA STABILIZED SUBBASE, 4"
- (C) EX HMA SHOULDERS, 8"
- (D) EX AGG WEDGE SHOULDER, TYPE B
- (E) EX GUARDRAIL
- (F) EX GROUND/EX TOPSOIL
- DENOTES REMOVAL ITEM
- PAVEMENT REMOVAL

PROPOSED LEGEND

- (1) PR HMA FULL-DEPTH PAVEMENT, 9.75"
- (2) PR AGGREGATE SUBGRADE IMPROVEMENT, 12"
- (3) NOT USED
- (4) PR HMA SHOULDERS, 9.75"
- (5) PR AGG SHOULDERS, TYPE B, 9.75"
- (6) PR GUARDRAIL (SEE PLAN AND PROFILE)
- (7) PR TOPSOIL & SEEDING (SEE LANDSCAPING PLAN)
- (8) PR PAVEMENT MARKING LINE (SEE PAVEMENT MARKING AND SIGNING PLAN)
- (9) PR LONGITUDINAL JOINT SEALANT (SEE NOTE 2)
- (10) PR SHOULDER RUMBLE STRIPS 8"
- (11) PR PIPE UNDERDRAIN

NOTES

1. HMA STABILIZATION AT STEEL PLATE BEAM GUARDRAIL IN ACCORDANCE WITH STANDARD 630201.
2. THE LONGITUDINAL JOINT SEALANT SHALL BE PLACED UNDER THE SURFACE LIFT.

MODEL: Default
FILE NAME: Z:\22037.12 IDOT D3 PTB 204-028 WO 12 IL 72 @ Owens\DGN\Design\Preliminary\Sheets\0366K63-sht-typical.dgn

EFK•Moen Civil Engineering Design	USER NAME = skierpiec	DESIGNED - SK	REVISED -
		DRAWN - SK	REVISED -
	PLOT SCALE = 10.0000 ' / in.	CHECKED - JH	REVISED -
	PLOT DATE = 3/12/2025	DATE - 3/12/2025	REVISED -

STATE OF ILLINOIS
DEPARTMENT OF TRANSPORTATION

IL 72 OVER OWENS CREEK
TYPICAL SECTIONS

SCALE: SHEET OF SHEETS STA. TO STA.

F.A.P. RTE.	SECTION	COUNTY	TOTAL SHEETS	SHEET NO.
553	(125BR)ES	DEKALB	96	14
		CONTRACT NO. 66K63		
	ILLINOIS	FED. AID PROJECT		

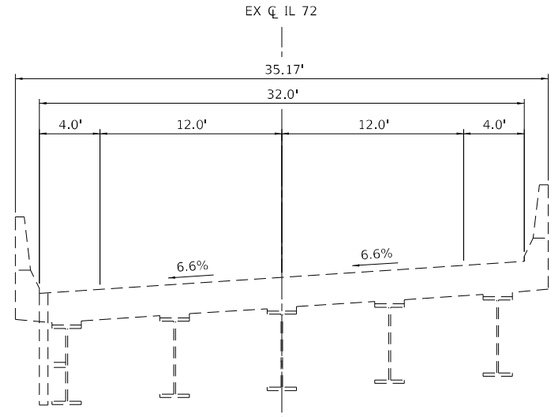

EXISTING BRIDGE TYPICAL SECTION

STA 302+18.59 TO 304+41.18
SN 019-0030
(FACING SOUTHEAST)

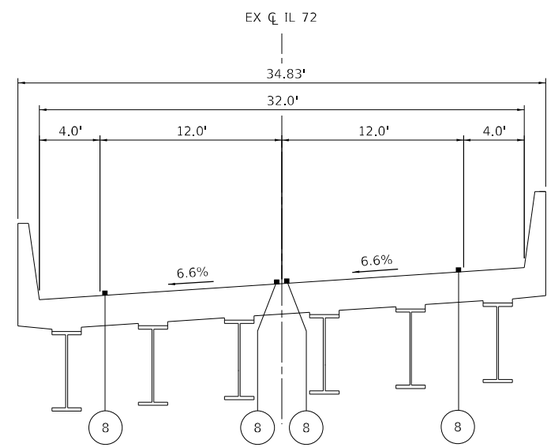

PROPOSED BRIDGE TYPICAL SECTION

STA 302+18.59 TO 304+41.18
SN 019-0030
(FACING SOUTHEAST)

LEGEND

- (A) EX PCC PAVEMENT REINFORCED JOINTED, 8"
- (B) EX HMA STABILIZED SUBBASE, 4"
- (C) EX HMA SHOULDERS, 8"
- (D) EX AGG WEDGE SHOULDER, TYPE B
- (E) EX GUARDRAIL
- (F) EX GROUND/EX TOPSOIL
- DENOTES REMOVAL ITEM
- PAVEMENT REMOVAL

PROPOSED LEGEND

- (1) PR HMA FULL-DEPTH PAVEMENT, 9.75"
- (2) PR AGGREGATE SUBGRADE IMPROVEMENT, 12"
- (3) NOT USED
- (4) PR HMA SHOULDERS, 9.75"
- (5) PR AGG SHOULDERS, TYPE B, 9.75"
- (6) PR GUARDRAIL (SEE PLAN AND PROFILE)
- (7) PR TOPSOIL & SEEDING (SEE LANDSCAPING PLAN)
- (8) PR PAVEMENT MARKING LINE (SEE PAVEMENT MARKING AND SIGNING PLAN)
- (9) PR LONGITUDINAL JOINT SEALANT (SEE NOTE 2)
- (10) PR SHOULDER RUMBLE STRIPS 8"
- (11) PR PIPE UNDERDRAIN

NOTES

1. HMA STABILIZATION AT STEEL PLATE BEAM GUARDRAIL IN ACCORDANCE WITH STANDARD 630201.
2. THE LONGITUDINAL JOINT SEALANT SHALL BE PLACED UNDER THE SURFACE LIFT.

MODEL: Default
FILE NAME: 7:\22057.12 IDOT D3 PTB 204-028 WO 12 IL 72 o' Owens\DGN\Design\Preliminary\Plan-sheets\03366K63-sht-typical.dgn

EFK•Moen
Civil Engineering Design

USER NAME = skierpiec	DESIGNED - SK	REVISED -	
	DRAWN - SK	REVISED -	
PLOT SCALE = 10.0000 ' / in.	CHECKED - JH	REVISED -	
PLOT DATE = 3/12/2025	DATE - 3/12/2025	REVISED -	

STATE OF ILLINOIS
DEPARTMENT OF TRANSPORTATION

IL 72 OVER OWENS CREEK
TYPICAL SECTIONS

SCALE: | SHEET OF SHEETS | STA. TO STA.

F.A.P. RTE.	SECTION	COUNTY	TOTAL SHEETS	SHEET NO.
553	(125BR)ES	DEKALB	96	15
		CONTRACT NO. 66K63		
	ILLINOIS	FED. AID PROJECT		

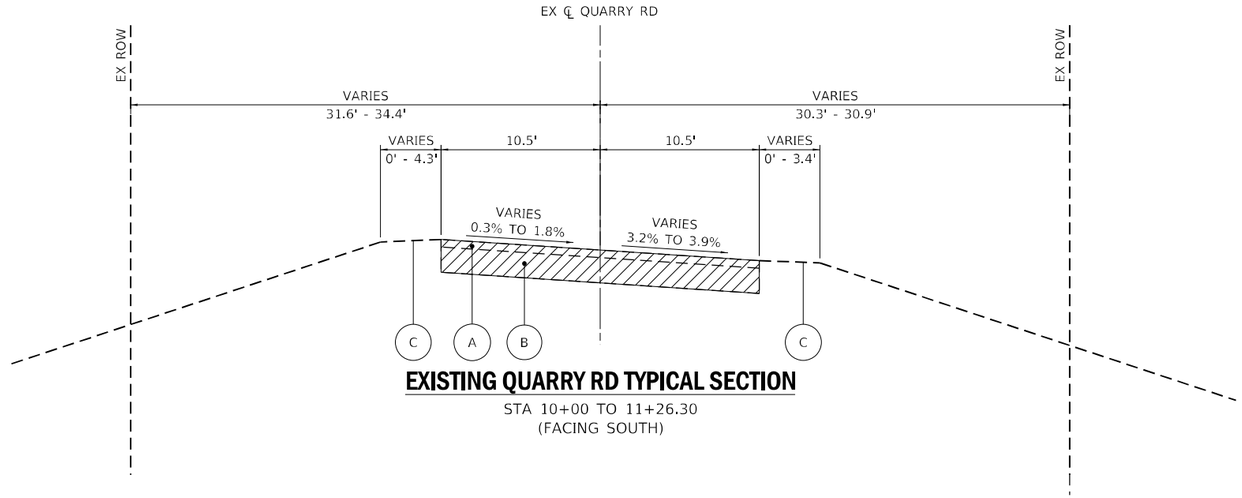

EXISTING QUARRY RD TYPICAL SECTION

STA 10+00 TO 11+26.30
(FACING SOUTH)

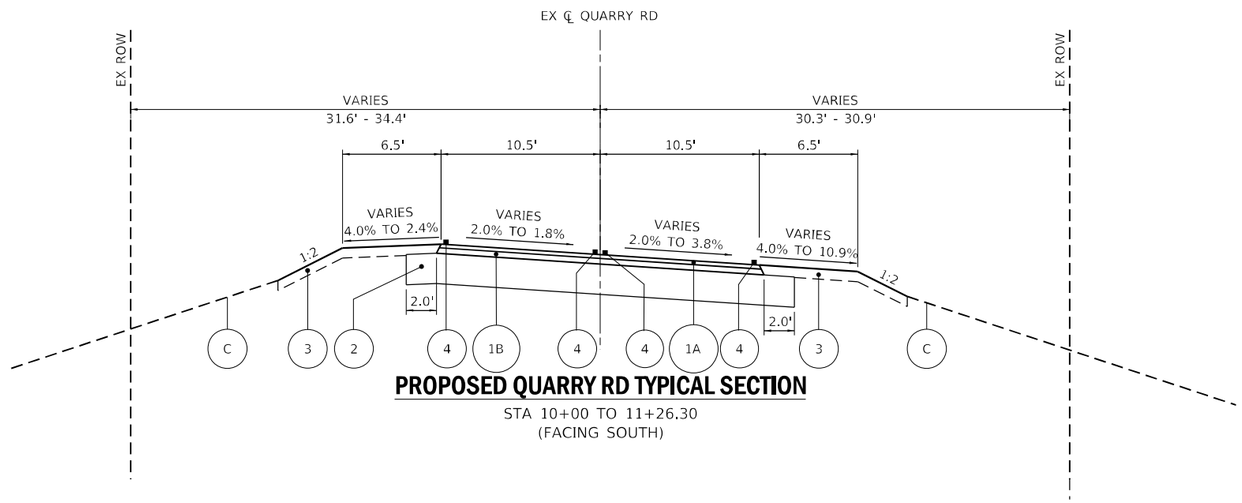

PROPOSED QUARRY RD TYPICAL SECTION

STA 10+00 TO 11+26.30
(FACING SOUTH)

LEGEND

- (A) EX HMA SURFACE COURSE, 3"
- (B) EX AGG BASE COURSE, 10"
- (C) EX GROUND/EX TOPSOIL
- PAVEMENT REMOVAL

PROPOSED LEGEND

- (1A) PR HMA SURFACE COURSE, IL-9.5, MIX "C", N50, 1.5"
- (1B) PR HMA BINDER COURSE, IL-19.0, N50, 2.25"
- (2) PR AGGREGATE BASE COURSE, TYPE B, 12"
- (3) PR TOPSOIL AND SEEDING (SEE LANDSCAPING PLAN)
- (4) PR PAVEMENT MARKING LINE (SEE PAVEMENT MARKING AND SIGNING PLAN)

MODEL: Default
FILE NAME: Z:\22057.12 IDOT D3 PTB 204-028 WO 12 IL 72 o Owens\DGN\Design\Prelim\Plcsheets\0366K63-ilht-typical.dgn

EFK•Moen
Civil Engineering Design

USER NAME = skierpiec	DESIGNED - SK	REVISED -	
	DRAWN - SK	REVISED -	
PLOT SCALE = 10.0000 ' / in.	CHECKED - JH	REVISED -	
PLOT DATE = 3/12/2025	DATE - 3/12/2025	REVISED -	

STATE OF ILLINOIS
DEPARTMENT OF TRANSPORTATION

IL 72 OVER OWENS CREEK
TYPICAL SECTIONS

SCALE: | SHEET OF SHEETS | STA. TO STA.

F.A.P. RTE.	SECTION	COUNTY	TOTAL SHEETS	SHEET NO.
553	(125BR)ES	DEKALB	96	16
		CONTRACT NO. 66K63		
	ILLINOIS	FED. AID PROJECT		

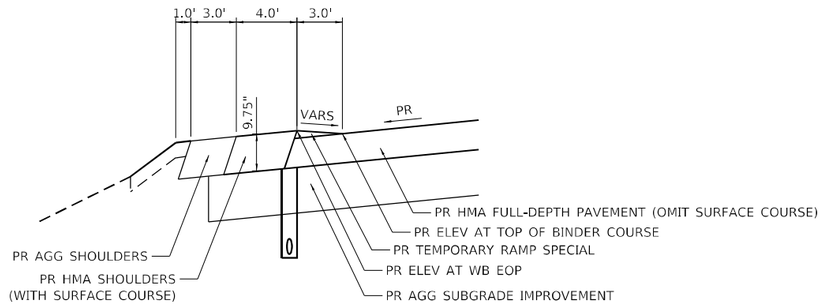

TEMPORARY RAMP SPECIAL AT WB EDGE OF PAVEMENT
(PRIOR TO PLACEMENT OF HMA SURFACE COURSE)

STA 296+30.00 TO STA 299+77.43
STA 308+12.50 TO STA 310+00.00
(FACING SOUTH/SOUTHEAST)

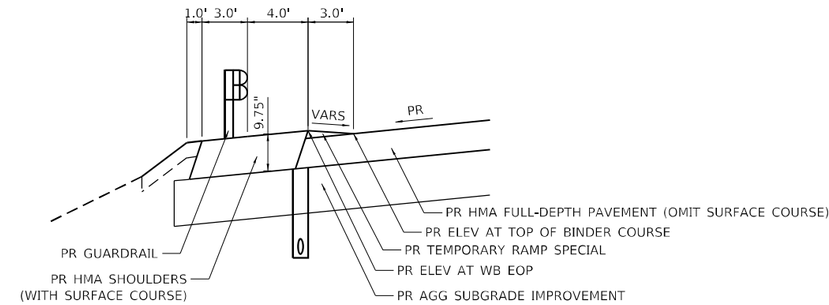

TEMPORARY RAMP SPECIAL AT WB EDGE OF PAVEMENT
(PRIOR TO PLACEMENT OF HMA SURFACE COURSE)

STA 299+77.43 TO 302+18.59
STA 304+41.18 TO 308+12.50
(FACING SOUTH/SOUTHEAST)

EARTHWORK SCHEDULE

1			2	3	4	5	6	7	8	9
LOCATION			EARTH EXCAVATION	REMOVAL AND DISPOSAL OF UNSUITABLE MATERIAL	EARTH EXCAVATION ADJUSTED FOR SHRINKAGE (25%)	EMBANKMENT	EARTH BALANCE WASTE (+) OR SHORTAGE (-)	TOPSOIL EXCAVATION (DEPTH = 6")	TOPSOIL PLACEMENT (DEPTH = 4")	TOPSOIL BALANCE WASTE (+) OR SHORTAGE (-)
	TO	FROM	CU YD	CU YD	CU YD	CU YD	CU YD	CU YD	CU YD	CU YD
PRIVATE ENTRANCE TEMP ACCESS AT 311+29			0	0	0	10	-10	16	0	16
PRE-STAGE SUBTOTAL			0	0	0	10	-10	15	0	15
IL 72	296+30.00	296+50.00	12	1	8	0	8	1	1	0
IL 72	296+50.00	296+80.00	20	1	14	1	13	3	1	2
IL 72	296+80.00	297+00.00	13	1	9	2	7	5	2	3
IL 72	297+00.00	297+50.00	33	2	23	4	19	13	4	9
IL 72	297+50.00	298+00.00	33	2	23	4	19	10	5	5
IL 72	298+00.00	298+50.00	32	2	23	12	11	17	9	8
IL 72	298+50.00	299+00.00	31	2	22	18	4	19	11	8
IL 72	299+00.00	299+50.00	29	1	21	31	-10	21	12	9
IL 72	299+50.00	300+00.00	32	2	23	51	-28	24	14	10
IL 72	300+00.00	300+50.00	33	2	23	67	-44	25	15	10
IL 72	300+50.00	300+96.52	34	2	24	59	-35	21	12	9
IL 72	300+96.52	301+50.00	57	3	41	53	-12	25	14	11
IL 72	301+50.00	301+84.90	55	3	39	38	1	18	11	7
SN 019-0030 BRIDGE OVER OWENS CREEK			62	3	44	42	2	20	13	7
IL 72	304+70.12	305+00.00	31	2	22	17	5	6	3	3
IL 72	305+00.00	305+50.00	68	3	49	57	-8	16	9	7
IL 72	305+50.00	306+00.00	67	3	48	59	-11	16	10	6
IL 72	306+00.00	306+50.00	70	4	50	51	-1	15	9	6
IL 72	306+50.00	307+00.00	54	3	38	43	-5	18	11	7
IL 72	307+00.00	307+50.00	38	2	27	39	-12	19	11	8
IL 72	307+50.00	307+85.50	26	1	19	15	4	13	3	10
IL 72	307+85.50	308+00.00	10	1	7	1	6	6	1	5
IL 72	308+00.00	308+50.00	41	2	29	3	26	21	10	11
IL 72	308+50.00	309+00.00	44	2	32	2	30	15	9	6
IL 72	309+00.00	309+50.00	36	2	26	0	26	7	4	3
IL 72	309+50.00	310+00.00	34	2	24	1	23	3	2	1
CULVERT AT FIELD ENTRANCE *						3	-3			
STAGE 1 SUBTOTAL			995	55	710	675	35	375	205	170
IL 72	296+30.00	296+50.00	13	1	9	0	9	1	0	1
IL 72	296+50.00	296+80.00	20	1	14	0	14	2	1	1
IL 72	296+80.00	297+00.00	13	1	9	1	8	2	1	1
IL 72	297+00.00	297+50.00	36	2	26	2	24	6	2	4
IL 72	297+50.00	298+00.00	37	2	26	2	24	6	2	4
IL 72	298+00.00	298+50.00	36	2	26	2	24	6	2	4
IL 72	298+50.00	299+00.00	48	2	35	17	18	9	4	5
IL 72	299+00.00	299+50.00	57	3	41	28	13	11	6	5
IL 72	299+50.00	300+00.00	63	3	45	42	3	14	7	7
IL 72	300+00.00	300+50.00	54	3	38	31	7	14	7	7
IL 72	300+50.00	300+96.52	28	1	20	1	19	5	2	3
IL 72	300+96.52	301+50.00	32	2	23	73	-50	18	9	9
IL 72	301+50.00	301+84.90	36	2	26	83	-57	21	13	8
SN 019-0030 BRIDGE OVER OWENS CREEK			58	3	41	53	-12	17	10	7
IL 72	304+70.12	305+00.00	28	1	20	69	-49	18	11	7
IL 72	305+00.00	305+50.00	35	2	25	134	-109	31	19	12
IL 72	305+50.00	306+00.00	31	2	22	162	-140	33	21	12
IL 72	306+00.00	306+50.00	33	2	23	161	-138	34	21	13
IL 72	306+50.00	307+00.00	34	2	24	139	-115	32	20	12
IL 72	307+00.00	307+50.00	35	2	25	113	-88	30	19	11
IL 72	307+50.00	307+85.50	30	2	21	58	-37	19	12	7
IL 72	307+85.50	308+00.00	17	1	12	19	-7	8	5	3
IL 72	308+00.00	308+50.00	49	2	35	32	3	14	9	5
IL 72	308+50.00	309+00.00	31	2	22	3	19	4	2	2
IL 72	309+00.00	309+50.00	31	2	22	2	20	4	1	3
IL 72	309+50.00	310+00.00	32	2	23	1	22	2	1	1
QUARRY RD	10+25.00	10+45.03	57	3	41	34	7	21	12	9
QUARRY RD	10+45.03	10+75.00	77	4	55	37	18	25	16	9
QUARRY RD	10+75.00	11+00.00	9	0	7	3	4	6	4	2
QUARRY RD	11+00.00	11+26.30	8	0	6	1	5	4	3	1
CULVERT AT QUARRY RD *						17	-17			
ARTICLE 669.05(a)(5) SOILS **						364	-364			
STAGE 2 SUBTOTAL			1070	55	760	1685	-925	415	240	175
PRIVATE ENTRANCE TEMP ACCESS AT 311+29			6	0	5	1	4	0	11	-11
POST-STAGE SUBTOTAL			5	0	5	0	5	0	10	-10
TOTAL			2070	110	1475	2370	-895	805	455	350

COLUMN 1: LOCATION FROM PLANS.
COLUMN 2: CUT QUANTITIES FROM CROSS SECTIONS. DOES NOT INCLUDE UNSUITABLE MATERIAL AND/OR TOPSOIL.
COLUMN 3: CUT MATERIAL THAT IS DETERMINED TO BE EITHER UNSTABLE OR UNSUITABLE FOR USE IN EMBANKMENT. NOMINAL QUANTITY OF 5% OF EARTH EXCAVATION (COLUMN 2) PROVIDED.
COLUMN 4: QUANTITIES OF EARTH EXCAVATION ADJUSTED FOR A SHRINKAGE FACTOR OF 25%.
COLUMN 5: QUANTITIES OF EMBANKMENT (FILL) FROM CROSS SECTIONS.
COLUMN 6: EARTHWORK BALANCE (COLUMN 4 - COLUMN 5)
(+) = QUANTITY OF EXTRA EXCAVATION TO BE WASTED.
(-) = QUANTITY OF FURNISHED EXCAVATION NEEDED.
COLUMN 7: QUANTITIES OF DISTURBED EXISTING TOPSOIL FROM CROSS SECTIONS. TO BE PAID FOR AS TOPSOIL EXCAVATION AND PLACEMENT.
COLUMN 8: QUANTITIES OF TOPSOIL NEEDED FOR LANDSCAPING FROM CROSS SECTIONS.
COLUMN 9: TOPSOIL BALANCE (COLUMN 7 - COLUMN 8)
(+) = QUANTITY OF TOPSOIL TO BE WASTED.
(-) = QUANTITY OF FURNISHED TOPSOIL NEEDED. TO BE PAID FOR AS TOPSOIL FURNISH AND PLACE, 4".

* SEE PIPE SCHEDULE FOR EMBANKMENT CALCULATIONS.
** SEE THE REMOVAL AND DISPOSAL OF REGULATED SUBSTANCES SPECIAL PROVISION. SOILS ARE PRESENT THAT SHALL BE MANAGED IN ACCORDANCE WITH ARTICLE 669.05(a)(5) OF THE STANDARD SPECIFICATIONS AND CANNOT BE REUSED ON SITE.

ROADWAY REMOVAL SCHEDULE

LOCATION	FROM STATION	OFFSET	TO STATION	OFFSET	PAVEMENT REMOVAL	PAVED SHOULDER REMOVAL	BRIDGE APPROACH SHOULDER REMOVAL	APPROACH SLAB REMOVAL
					SQ YD	SQ YD	SQ YD	SQ YD
IL 72	296+30.00	LT/RT	302+14.00	LT/RT	1551.9			
IL 72	296+30.00	13.46 LT	302+15.28	12.92 LT		138.8		
IL 72	296+30.00	12.81 RT	302+49.92	13.50 RT		109.0		
IL 72	301+32.44	12.80 RT	302+49.92	13.50 RT		31.8		
IL 72	302+14.13	LT/RT	302+61.88	12.43 RT				91.9
IL 72	302+15.25	14.27 LT	302+35.86	11.59 LT			9.5	
IL 72	302+49.97	14.41 RT	302+66.01	16.39 RT			6.5	
IL 72	303+95.88	16.48 LT	304+11.63	14.49 LT			6.1	
IL 72	304+22.07	12.12 RT	304+41.42	16.72 RT			9.0	
IL 72	303+99.59	12.41 LT	304+41.29	LT/RT				81.5
IL 72	304+11.69	13.38 LT	309+99.68	13.18 LT		161.1		
IL 72	304+41.29	LT/RT	310+00.00	LT/RT	1480.4			
IL 72	304+41.57	12.98 RT	310+00.00	12.86 RT		161.7		
QUARRY RD	10+11.98	LT/RT	11+26.30	LT/RT	360.8			
				TOTAL	3394	603	32	174

EXISTING DRAINAGE SCHEDULE

STRUCTURE TYPE	FROM STA	TO STA	O/S	PIPE CULVERT REMOVAL	REMOVE EXISTING FLARED END SECTION	REMOVING INLETS	CONTROLLED LOW-STRENGTH MATERIAL	TRENCH BACKFILL	NOTE
				FOOT	EACH	EACH	CU YD	CU YD	
PIPE CULVERT	300+58	301+42	37.5' RT	86.0	2			231.9	42" CMP
PIPE DRAIN	302+17		11.8' LT			1	0.7		12" CMP
INLET	307+58		26.9' LT			1			
			TOTAL	86	2	2	0.7	232	

NOTES:
1. SEE PIPE SCHEDULE FOR ADDITIONAL TRENCH BACKFILL QUANTITIES.

STRUCTURE SCHEDULE

STATION	OFFSET	INVERT ELEVATION	STONE RIPRAP, CLASS A4	FILTER FABRIC	SLOPED METAL END SECTION, STANDARD 542411, 15", 1:4	SLOPED METAL END SECTION WITH GRATE, STANDARD 542411, 15", 1:4	PRECAST REINFORCED CONCRETE FLARED END SECTIONS 36"
			SQ YD	SQ YD	EACH	EACH	EACH
300+56.96	42.5' RT	756.31					1
301+34.91	48.3' RT	756.07					1
307+50.83	31.3' LT	765.80	3.0	3.0	1		
308+17.45	24.4' LT	768.00	3.0	3.0		1	
		TOTAL	6	6	1	1	2

NOTES:
1. SEE UNDERDRAIN SCHEDULE FOR ADDITIONAL STONE RIPRAP, CLASS A4 AND FILTER FABRIC QUANTITIES.

PIPE SCHEDULE

SLOPE	FROM			TO			EMBANKMENT (SEE EARTHWORK SCHEDULE)	TRENCH BACKFILL	PIPE CULVERTS, CLASS D, TYPE 2 15"	PIPE CULVERTS, CLASS D, TYPE 2 36"
%	STATION	OFFSET	INVERT ELEVATION	STATION	OFFSET	INVERT ELEVATION	CU YD	CU YD	FOOT	FOOT
0.30%	300+64.92	43.0' RT	756.29	301+27.00	47.6' RT	756.10	17.4	55.6		64
3.33%	307+53.03	31.1' LT	765.87	308+15.27	24.7' LT	767.93	2.6	5.2	61	
						TOTAL	20	61	61	64

NOTES:
1. SEE EXISTING DRAINAGE SCHEDULE FOR ADDITIONAL TRENCH BACKFILL QUANTITIES.

PIPE UNDERDRAIN SCHEDULE

FROM STATION	OFFSET	TO STATION	OFFSET	STONE RIPRAP, CLASS A4	FILTER FABRIC	CONCRETE HEADWALLS FOR PIPE DRAINS	PIPE UNDERDRAINS 4" (SPECIAL)	PIPE UNDERDRAINS, TYPE 3
				SQ YD	SQ YD	EACH	FOOT	FOOT
296+30.00	12.5' LT	302+07.38	12.5' LT					537.6
297+00.00	12.5' LT	297+00.00	31.4' LT				18.9	
297+00.00	31.4' LT			1.1	1.1	1		
305+00.00	12.5' LT	310+00.00	12.5' LT					496.7
305+00.00	12.5' LT	305+00.00	22.8' LT				10.3	
305+00.00	22.8' LT			2.6	2.6	1		
			TOTAL	4	4	2	30	1035

NOTES:
1. SEE STRUCTURE SCHEDULE FOR ADDITIONAL STONE RIPRAP, CLASS A4 AND FILTER FABRIC QUANTITIES.

GUARDRAIL REMOVAL SCHEDULE

FROM STATION	OFFSET	TO STATION	OFFSET	GUARDRAIL REMOVAL
				FOOT
298+48.36	21.3 RT	300+60.58	25.6 RT	216.0
299+99.56	21.0 LT	302+34.29	16.4 LT	232.4
301+30.03	24.8 RT	302+68.44	16.4 RT	140.2
303+91.27	16.6 LT	307+73.36	20.2 LT	378.3
304+26.28	16.6 RT	308+36.41	24.2 RT	414.5
307+19.68	22.8 LT	307+65.54	22.9 LT	45.4
			TOTAL	1427

TREE REMOVAL SCHEDULE

STATION	OFFSET	TREE REMOVAL (6 TO 15 UNITS DIAMETER)	TREE REMOVAL (OVER 15 UNITS DIAMETER)
		UNIT	UNIT
300+69.72	38.3' LT	10	
300+89.87	37.0' LT	10	
301+23.85	47.2' LT	8	
301+49.45	42.6' LT	15	
302+14.83	37.4' LT		26
302+27.78	33.7' LT	12	
302+34.53	50.2' LT	15	
304+44.39	46.9' LT	12	
304+51.01	46.6' LT		24
304+58.83	45.0' LT	15	
305+38.63	33.7' RT	15	
305+56.70	30.4' RT		20
306+17.65	28.6' RT	15	
306+17.65	28.6' RT	15	
306+28.45	40.3' RT	10	
306+55.41	37.7' RT	7	
306+55.86	44.6' RT	7	
306+64.01	38.7' RT	6	
306+66.68	45.3' RT	13	
306+66.91	40.4' RT	9	
306+69.41	42.7' RT	9	
306+69.54	40.7' RT	12	
307+06.80	42.7' RT		16
307+59.28	38.6' LT		33
307+59.71	52.6' RT		47
308+03.55	36.5' RT	7	
308+12.44	50.0' LT		17
	TOTAL	222	183

PROPOSED PAVEMENT SCHEDULE

LOCATION	FROM STATION	TO STATION	LT/RT	AGGREGATE SUBGRADE IMPROVEMENT, 12"	BITUMINOUS MATERIALS (TACK COAT)	BITUMINOUS MATERIALS (PRIME COAT)	HOT-MIX ASPHALT PAVEMENT (FULL-DEPTH), 9 3/4"	PAVEMENT CONNECTOR (HMA) FOR BRIDGE APPROACH SLAB	AGGREGATE SHOULDERS, TYPE B 9 3/4"	HOT-MIX ASPHALT SHOULDERS, 9 3/4"	LONGITUDINAL JOINT SEALANT	HOT-MIX ASPHALT BINDER COURSE, IL-19.0, N50	HOT-MIX ASPHALT SURFACE COURSE, IL-9.5, MIX "C", N50	AGGREGATE BASE COURSE, TYPE B 12"	AGGREGATE SURFACE COURSE, TYPE B
				SQ YD	POUND	POUND	SQ YD	SQ YD	SQ YD	SQ YD	FOOT	TON	TON	SQ YD	TON
IL 72	296+30	297+35	RT						24.0						
IL 72	296+30	299+96	LT						109.5						
IL 72	296+30	300+66	RT		218.7					304.2					
IL 72	296+30	302+17	LT		233.6					319.8					
IL 72	296+30	302+17	LT/RT		1031.9		1528.8								
IL 72	296+30	302+03	LT/RT								573.4				
IL 72	296+30	302+52	LT/RT	2568.1		5778.1									
IL 72	301+18	302+52	RT		77.9					109.1					
IL 72	301+90	302+36	LT/RT					100.6							
IL 72	304+27	304+65	LT/RT					85.4							
IL 72	304+10	310+00	LT		261.2					360.3					
IL 72	304+39	310+00	RT		240.4					330.6					
IL 72	304+46	310+00	LT/RT		977.6		1448.3								
IL 72	304+10	310+00	LT/RT	2424.5		5455.1									
IL 72	304+57	310+00	LT/RT								543.7				
IL 72	307+07	310+00	RT						87.1						
FIELD	307+58	308+13	LT/RT												40.5
IL 72	308+10	310+00	LT						54.1						
QUARRY RD	10+09	11+26	LT/RT		80.5	955.3						45.4	29.9	424.6	
			TOTAL	4993	3122	12189	2977	186	275	1424	1118	46	30	425	41

DELINEATOR SCHEDULE

EX STATION	EX OFFSET	PR STATION	PR OFFSET	DELINEATOR REMOVAL	DELINEATORS
				EACH	EACH
		296+42	22.0' LT		1
297+75	18.5' LT	297+67	22.0' LT	1	1
		298+92	22.0' LT		1
300+01	21.5' LT	300+17	16.8' LT	1	1
		296+05	22.0' RT		1
		297+30	22.0' RT		1
298+48	21.3' RT	298+55	16.7' RT	1	1
300+61	25.6' RT	300+55	16.7' RT	1	1
300+77	48.0' RT	300+62	42.8' RT	1	1
		301+30	47.8' RT		1
301+30	25.8' RT	301+30	19.0' RT	1	1
307+73	23.6' LT	307+45	16.8' LT	1	1
		308+70	22.0' LT		1
		309+45	22.0' LT		1
310+19	16.8' LT	310+19	16.8' LT	1	1
		308+17	22.8' LT		1
308+36	24.1' RT	307+02	16.7' RT	1	1
		308+27	22.0' RT		1
		309+23	22.0' RT		1
310+20	17.2' RT	310+20	17.2' RT	1	1
311+47	17.4' RT	311+47	17.4' RT	1	1
			TOTAL	11	21

PROPOSED GUARDRAIL AND FENCE SCHEDULE

FROM STATION	TO STATION	OFFSET	STEEL PLATE BEAM GUARDRAIL, TYPE A, 9 FOOT POSTS	TRAFFIC BARRIER TERMINAL, TYPE 6	TRAFFIC BARRIER TERMINAL, TYPE 1 (SPECIAL) TANGENT	TRAFFIC BARRIER TERMINAL, TYPE 1 (SPECIAL) FLARED	TERMINAL MARKER - DIRECT APPLIED	GUARDRAIL REFLECTORS, TYPE A	BARRIER WALL REFLECTORS, TYPE C	LINEAR DELINEATOR PANELS, 4 INCH	LINEAR DELINEATOR PANELS, 6 INCH	WOVEN WIRE FENCE REMOVAL AND REPLACEMENT
			FOOT	EACH	EACH	EACH	EACH	EACH	EACH	EACH	EACH	FOOT
298+50	302+05	LT										347.9
297+45	297+95	RT			1		1					
297+95	300+05	RT	212.5					4		6		
300+05	300+55	RT			1		1					
300+06	300+56	LT			1		1					
300+56	301+82	LT	125.0					4		4		
301+82	302+20	LT		1								
301+31	301+80	RT				1	1					
301+80	302+18	RT	37.5					4		2		
302+18	302+55	RT		1								
302+20	304+08	LT							6		3	
302+55	304+37	RT							6		3	
304+08	304+45	LT		1								
304+45	306+97	LT	250.0					5		7		
306+55	308+25	LT										166.7
306+97	307+48	LT			1		1					
304+37	304+74	RT		1								
304+74	306+47	RT	175.0					4		5		
306+47	306+97	RT			1		1					
		TOTAL	800.0	4	5	1	6	21	12	24	6	515

MODEL: Default
FILE NAME: Z:\22057.12 IDOT D3 PTB 204-028 WO 12 IL 72 O Owens\DGN\Design\Prelim\Plansheets\0366K63-sht-schedule.dgn

EFK•Moen
Civil Engineering Design

USER NAME = skierpiec	DESIGNED - SK	REVISED -
	DRAWN - SK	REVISED -
PLOT SCALE = 100.0000 ' / in.	CHECKED - JH	REVISED -
PLOT DATE = 3/24/2025	DATE - 3/24/2025	REVISED -

STATE OF ILLINOIS
DEPARTMENT OF TRANSPORTATION

IL 72 OVER OWENS CREEK
SCHEDULES

SCALE: SHEET OF SHEETS STA. TO STA.

F.A.P. RTE.	SECTION	COUNTY	TOTAL SHEETS	SHEET NO.
553	(125BR)ES	DEKALB	96	20
		CONTRACT NO. 66K63		
	ILLINOIS	FED. AID PROJECT		

MAINTENANCE OF TRAFFIC SCHEDULE

STAGE	LOCATION	FROM STATION	OFFSET	TO STATION	OFFSET	AGGREGATE FOR TEMPORARY ACCESS	TEMPORARY CONCRETE BARRIER	PINNING TEMPORARY CONCRETE BARRIER	RELOCATE TEMPORARY CONCRETE BARRIER	IMPACT ATTENUATORS, TEMPORARY (FULLY REDIRECTIVE, NARROW), TEST LEVEL 3	IMPACT ATTENUATORS, RELOCATE (FULLY REDIRECTIVE, NARROW), TEST LEVEL 3	TEMPORARY RUMBLE STRIPS	TEMPORARY PAVEMENT	TEMPORARY INFORMATION SIGNING
						TON	FOOT	EACH	FOOT	EACH	EACH	EACH	SQ YD	SQ FT
PRE-STAGE	IL 72	296+30	RT	300+65	RT								158.3	
	IL 72	301+21	RT	302+50	RT								61.9	
	IL 72	304+41	RT	310+00	RT								209.7	
	IL 72	311+35	RT	312+00	RT	24.0								
	QUARRY RD	10+31	RT	10+98	RT								31.8	
	ROAD WORK AHEAD: IL 72													42.0
PRE-STAGE SUBTOTAL						24.0	0.0	0	0.0	0	0	0	462	42
STAGE 1	IL 72	295+30	LT							1				
	IL 72	295+30	LT	296+00	RT		100.0							
	IL 72	296+00	LT	310+00	RT		1375.0	336						
	IL 72	310+00	RT	311+00	LT		100.0							
	IL 72	311+00	LT							1				
	IL 72/QUARRY RD											9		
STAGE 1 SUBTOTAL						0.0	1575.0	336	0.0	2	0	9	0	0
STAGE 2	IL 72	295+05	RT								1			
	IL 72	295+05	RT	296+30	LT				125.0					
	IL 72	296+30	LT	302+19	LT			147	587.5					
	IL 72	302+19	LT	304+37	LT				225.0					
	IL 72	304+37	LT	310+00	LT			141	562.5					
	IL 72	310+00	LT	311+25	RT		50.0		75.0					
	IL 72	311+25	RT								1			
	IL 72											6		
	ROAD CLOSED SIGNS: QUARRY RD													42.0
STAGE 2 SUBTOTAL						0.0	50.0	288	1575.0	0	2	6	0	42
TOTAL						24	1625.0	624	1575.0	2	2	15	462	84

MAINTENANCE OF TRAFFIC PAVEMENT MARKING SCHEDULE

STAGE	LOCATION	START STATION	END STATION	LINE TYPE	OFFSET	INCLUDED IN TCP 701321	INCLUDED IN TCP 701321	INCLUDED IN TCP 701321	SHORT TERM PAVEMENT MARKING REMOVAL	PAVEMENT MARKING REMOVAL - WATER BLASTING	SHORT TERM PAVEMENT MARKING	TEMPORARY PAVEMENT MARKING - TAPE TYPE IV - LINE 24"
						SHORT TERM PAVEMENT MARKING REMOVAL	TEMPORARY PAVEMENT MARKING - TAPE TYPE IV - LINE 4"	TEMPORARY PAVEMENT MARKING - TAPE TYPE IV - LINE 24"				
							SOLID WHITE	SOLID WHITE				SOLID WHITE
						SQ FT	FOOT	FOOT	SQ FT	SQ FT	FOOT	FOOT
BEFORE STAGE 1	IL 72	294+07	296+30	EOP	LT					74.3		
	IL 72	294+07	296+30	CL	LT/RT					148.7		
	IL 72	295+30	311+10	EOP	RT					526.7		
	IL 72	310+00	312+83	EOP	LT					94.3		
	IL 72	310+00	312+93	CL	LT/RT					195.3		
STAGE 1	IL 72	293+47		STOP BAR	RT			11.2				
	IL 72	294+07	312+83	EOP	LT/RT		1880.0					
	IL 72	295+30	311+10	EOP	RT		1592.0					
	QUARRY RD	10+47		STOP BAR	RT							10.2
	PRIVATE	311+29		STOP BAR	RT							12.0
	IL 72	312+93		STOP BAR	LT			13.3				
BEFORE STAGE 2	IL 72	293+47		STOP BAR	RT	22.4						
	IL 72	293+60	295+30	EOP	RT					56.7		
	IL 72	293+60	294+07	CL	LT/RT					31.3		
	IL 72	294+07	312+83	EOP	LT/RT	626.7						
	IL 72	295+30	311+10	EOP	RT	530.7						
	IL 72	311+10	312+35	EOP	RT					41.5		
	IL 72	312+93		STOP BAR	LT	26.6						
STAGE 2	IL 72	293+50		STOP BAR	RT			11.2				
	IL 72	293+60	312+35	EOP	LT/RT		1903.6					
	IL 72	295+16	311+11	EOP	LT		1613.3					
	IL 72	312+95		STOP BAR	LT			13.3				
BEFORE FINAL PMK PLACEMENT	IL 72	293+50		STOP BAR	RT	22.4						
	IL 72	293+60	312+35	EOP	LT/RT	634.5						
	IL 72	295+16	311+11	EOP	LT	537.8						
	PRIVATE	311+29		STOP BAR	RT				24.0			
	IL 72	312+95		STOP BAR	LT	26.6						
	IL 72	293+47	296+30	CL	LT/RT				28.3		84.9	
	IL 72	296+30	310+00	CL	LT/RT				137.0		411.0	
	IL 72	310+00	312+95	CL	LT/RT				29.5		88.5	
	QUARRY RD	10+56	11+26	CL	LT/RT				7.0		21.0	
								TOTAL	226	1169	606	23

MODEL: Default
FILE NAME: Z:\22037.12 IDOT D3 PTB 204-028 WO 12 IL 72 o Owens\DGN\Design\Prelim\Plansheets\0366K63-sht-schedule.dgn

EFK•Moen
Civil Engineering Design

USER NAME = skierpiec	DESIGNED - SK	REVISED -
	DRAWN - SK	REVISED -
PLOT SCALE = 100.0000 ' / in.	CHECKED - JH	REVISED -
PLOT DATE = 3/12/2025	DATE - 3/12/2025	REVISED -

STATE OF ILLINOIS
DEPARTMENT OF TRANSPORTATION

IL 72 OVER OWENS CREEK
SCHEDULES

SCALE: | SHEET OF SHEETS | STA. TO STA.

F.A.P. RTE.	SECTION	COUNTY	TOTAL SHEETS	SHEET NO.
553	(125BR)ES	DEKALB	96	21

CONTRACT NO. 66K63

ILLINOIS | FED. AID PROJECT

PAVEMENT MARKING SCHEDULE

LOCATION	START STATION	END STATION	OFFSET	MODIFIED URETHANE PAVEMENT MARKING - LINE 4"			GROOVING FOR RECESSED PAVEMENT MARKING 5"	MODIFIED URETHANE PAVEMENT MARKING - LINE 6"	GROOVING FOR RECESSED PAVEMENT MARKING 7"	SHOULDER RUMBLE STRIPS, 8 INCH	RAISED REFLECTIVE PAVEMENT MARKER, REFLECTOR REMOVAL	RAISED REFLECTIVE PAVEMENT MARKER, REFLECTOR REPLACEMENT	RAISED REFLECTIVE PAVEMENT MARKER REMOVAL	RAISED REFLECTIVE PAVEMENT MARKER
				SOLID WHITE	SOLID YELLOW	DOUBLE YELLOW		10' DASH - 30' SKIP YELLOW						2-WAY, AMBER
				FOOT		FOOT	FOOT	FOOT	FOOT	FOOT	EACH	EACH	EACH	EACH
IL 72	293+47.00	296+30.00	LT	562.6			281.3							
IL 72	293+47.00	296+30.00	LT/RT			1130.7	565.4				4	4		
IL 72	293+47.00	296+30.00	RT	569.4			284.7							
IL 72	296+30.00	310+00.00	LT	2723.3			1361.6			1088.5				
IL 72	296+30.00	308+60.00	LT/RT			4920.0	2460.0						16	16
IL 72	308+60.00	310+00.00	LT/RT		280.0		140.0	70.0	35.0				2	2
IL 72	296+30.00	300+44.85	RT	829.5			414.8			415.0				
IL 72	301+50.04	310+00.00	RT	1710.8			855.4			640.1				
IL 72	310+00.00	312+95.00	LT	587.2			293.6							
IL 72	310+00.00	312+95.00	LT/RT		590.0		295.0	147.5	73.8		4	4		
IL 72	310+00.00	312+95.00	RT	586.2			293.1							
QUARRY RD	10+56.22	11+26.30	LT/RT			280.4	140.2							
QUARRY RD	10+55.84	11+26.30	LT	141.0			70.5							
QUARRY RD	10+56.59	11+26.30	RT	139.4			69.7							
			TOTAL	15051			7526	218	109	2144	8	8	18	18

SIGNING SCHEDULE

EXISTING STATION	EXISTING OFFSET	PROPOSED STATION	PROPOSED OFFSET	PROPOSED MOUNTING TYPE	DESIGNATION	SHEETING TYPE	DESCRIPTION	PANEL WIDTH	PANEL HEIGHT	PANEL AREA	REMOVE SIGN PANEL ASSEMBLY - TYPE A	REMOVE SIGN PANEL - TYPE 1	SIGN PANEL - TYPE 1	WOOD SIGN SUPPORT	
														FOOT	
								INCH	INCH	SQ FT	EACH	SQ FT	SQ FT	P1	P2
300+29.29	22.22 LT	300+29.00	26.85 LT	GROUND	M3-4P	AP SHEETING	CARDINAL DIRECTION	24	12	2.0	1		2.0	15.2	
300+29.29	22.22 LT	300+29.00	26.85 LT	GROUND	M1-1100	AP SHEETING	STATE ROUTE	24	24	4.0			4.0		
300+77.70	46.03 RT	300+73.46	56.57 RT	GROUND	CUSTOM	AP SHEETING	340E ROUTE 72	24	12	2.0	1		2.0	14.2	
300+77.70	46.03 RT	300+73.46	56.57 RT	GROUND	CUSTOM	AP SHEETING	3160N QUARRY RD	24	12	2.0			2.0		
300+99.03	21.95 LT	300+96.52	21.00 LT	GROUND	W1-7	AZ SHEETING	TWO-DIRECTION LARGE	48	24	8.0		8.0	8.0	14.1	14.1
301+14.18	46.88 RT	301+19.07	56.14 RT	GROUND	R1-1	ZZ SHEETING	STOP	30	30	6.3		6.3	6.3	15.1	
301+82.85	20.30 RT	301+83.00	20.85 RT	GROUND	M3-2P	AP SHEETING	CARDINAL DIRECTION	24	12	2.0	1		2.0	14.3	
301+82.85	20.30 RT	301+83.00	20.85 RT	GROUND	M1-1100	AP SHEETING	STATE ROUTE	24	24	4.0			4.0		
304+91.34	20.04 RT	304+91.00	20.85 RT	GROUND	CUSTOM	AP SHEETING	UNLAWFUL SCHOOL BUS	24	30	5.0		5.0	5.0	13.6	
307+13.91	22.37 LT	307+14.00	21.10 LT	GROUND	W2-2L	AZ SHEETING	INTERSECTION WARNING	30	30	6.3	1		6.3	15.3	
307+13.91	22.37 LT	307+14.00	21.10 LT	GROUND	W16-8P	AZ SHEETING	STREET NAME	24	8	1.3			1.3		
316+25.00	25.08 LT	316+25.00	25.08 LT	GROUND	W1-2	AZ SHEETING	HORIZONTAL ALIGNMENT	30	30	6.3		6.3	6.3	15.0	
N/A	N/A	316+25.00	25.08 LT	GROUND	W13-1P	AZ SHEETING	ADVISORY SPEED	18	18	2.3			2.3		
										TOTAL	4	26	52	131	

EROSION CONTROL SCHEDULE

FROM STATION	TO STATION	OFFSET	TEMPORARY FENCE	PERIMETER EROSION BARRIER	INLET AND PIPE PROTECTION	TEMPORARY DITCH CHECKS	EROSION CONTROL BLANKET	HEAVY DUTY EROSION CONTROL BLANKET	TEMPORARY EROSION CONTROL SEEDING
			FOOT	FOOT	EACH	FOOT	SQ YD	SQ YD	POUND
296+30.00	300+80.00	LT					693.0		43.0
296+30.00	300+85.85	RT						450.2	27.9
296+30.00	301+30.00	LT		531.7					
296+30.00	300+80.93	RT		539.6					
299+25.00	300+62.00	RT	172.2						
300+56.96		42.55' RT			1				
300+80.00	302+28.26	LT				6.6		335.6	20.8
301+04.36	302+55.47	RT				5.5		489.5	30.3
301+08.41	301+34.20	RT		95.5					
301+21.00	303+60.00	RT	282.6						
302+01.76	302+87.57	RT		90.4					
302+28.26	302+58.83	LT		30.0					
303+67.00	306+54.00	LT	282.6						
303+82.89	306+75.01	LT		300.0					
304+06.55	307+73.24	LT				22.8		557.3	34.5
304+17.07	310+00.00	RT		611.7					
304+39.05	310+00.00	RT						1337.8	82.9
307+97.76	310+00.00	LT				17.3		233.0	14.4
308+17.45		24.44' LT			1				
311+37.31	311+99.79	RT					79.2		4.9
		TOTAL	738	2199	2	53	773	3404	259

LANDSCAPING SCHEDULE

LOCATION			AREA	SEEDING CLASS 2A	SEEDING CLASS 3	NITROGEN FERTILIZER NUTRIENT	PHOSPHORUS FERTILIZER NUTRIENT	POTASSIUM FERTILIZER NUTRIENT
FROM STATION	TO STATION	OFFSET						
			SQ FT	ACRE	ACRE	POUND	POUND	POUND
296+30.00	300+80.00	LT	6237.04	0.14		12.9	12.9	12.9
296+30.00	300+85.85	RT	4051.78		0.09	8.4	8.4	8.4
300+80.00	302+28.26	LT	3020.33		0.07	6.2	6.2	6.2
301+04.36	302+55.47	RT	4405.47		0.10	9.1	9.1	9.1
304+06.55	307+73.24	LT	5016.00		0.12	10.4	10.4	10.4
307+97.76	310+00.00	LT	2097.02		0.05	4.3	4.3	4.3
304+39.05	310+00.00	RT	12040.23		0.28	24.9	24.9	24.9
311+35.37	311+99.73	RT	712.60	0.02		1.5	1.5	1.5
			TOTAL	0.16	0.70	78	78	78
			ROUNDED TOTAL	0.25	0.75	78	78	78

MODEL: Default
FILE NAME: P:\22037.12 IDOT D3 PTB 204-028 WO 12 IL 72 o' Owens\DGN\Design\Preliminary\sheets\0366K63-sht-schedule.dgn

EFK♦Moen
Civil Engineering Design

USER NAME = skierpiec	DESIGNED - SK	REVISED -	
	DRAWN - SK	REVISED -	
PLOT SCALE = 100.0000 ' / in.	CHECKED - JH	REVISED -	
PLOT DATE = 3/12/2025	DATE - 3/12/2025	REVISED -	

STATE OF ILLINOIS
DEPARTMENT OF TRANSPORTATION

IL 72 OVER OWENS CREEK
SCHEDULES

SCALE: SHEET OF SHEETS STA. TO STA.

F.A.P. RTE.	SECTION	COUNTY	TOTAL SHEETS	SHEET NO.
553	(125BR)ES	DEKALB	96	22
		CONTRACT NO. 66K63		
	ILLINOIS	FED. AID PROJECT		

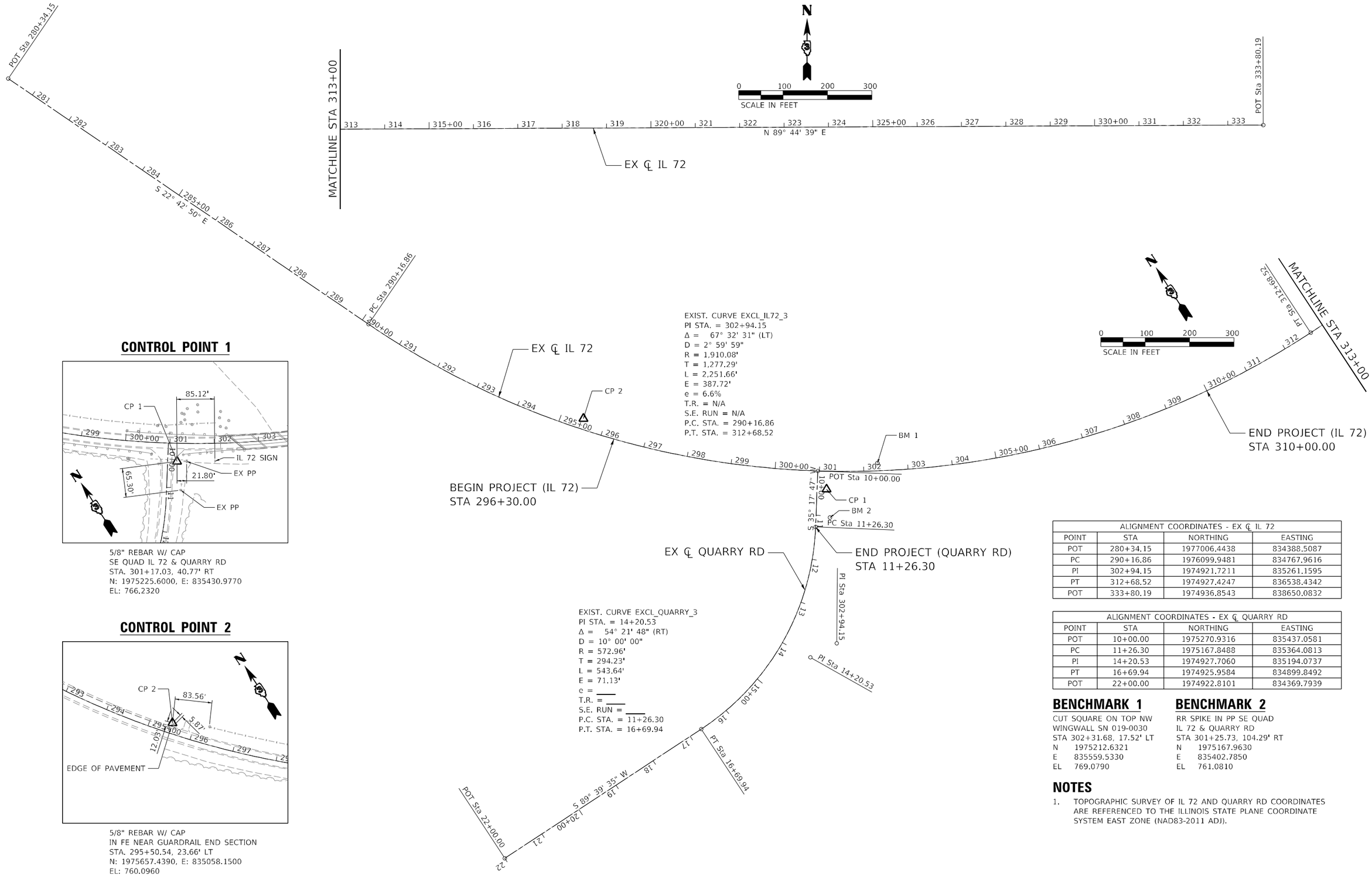

ALIGNMENT COORDINATES - EX ℄ IL 72			
POINT	STA	NORTHING	EASTING
POT	280+34.15	1977006.4438	834388.5087
PC	290+16.86	1976099.9481	834767.9616
PI	302+94.15	1974921.7211	835261.1595
PT	312+68.52	1974927.4247	836538.4342
POT	333+80.19	1974936.8543	838650.0832

ALIGNMENT COORDINATES - EX ℄ QUARRY RD			
POINT	STA	NORTHING	EASTING
POT	10+00.00	1975270.9316	835437.0581
PC	11+26.30	1975167.8488	835364.0813
PI	14+20.53	1974927.7060	835194.0737
PT	16+69.94	1974925.9584	834899.8492
POT	22+00.00	1974922.8101	834369.7939

BENCHMARK 1

CUT SQUARE ON TOP NW
WINGWALL SN 019-0030
STA 302+31.68, 17.52' LT
N 1975212.6321
E 835559.5330
EL 769.0790

BENCHMARK 2

RR SPIKE IN PP SE QUAD
IL 72 & QUARRY RD
STA 301+25.73, 104.29' RT
N 1975167.9630
E 835402.7850
EL 761.0810

NOTES

1. TOPOGRAPHIC SURVEY OF IL 72 AND QUARRY RD COORDINATES ARE REFERENCED TO THE ILLINOIS STATE PLANE COORDINATE SYSTEM EAST ZONE (NAD83-2011 ADJ).

MODEL: Default
FILE NAME: 2:\22037.12 IDOT D3 PTB 204-028 WO 12 IL 72 at Owens\DGN\Design\Preliminary\Sheets\0366K63-alt-ATR.dgn

EFK•Moen
Civil Engineering Design

USER NAME = skierpiec	DESIGNED - SK	REVISED -	
	DRAWN - SK	REVISED -	
PLOT SCALE = 200.0000 ' / in.	CHECKED - JH	REVISED -	
PLOT DATE = 3/12/2025	DATE - 3/12/2025	REVISED -	

STATE OF ILLINOIS
DEPARTMENT OF TRANSPORTATION

IL 72 OVER OWENS CREEK
ALIGNMENT, TIES, AND BENCHMARKS

SCALE: SHEET OF SHEETS STA. TO STA.

F.A.P. RTE.	SECTION	COUNTY	TOTAL SHEETS	SHEET NO.
553	(125BR)ES	DEKALB	96	23

CONTRACT NO. 66K63
ILLINOIS FED. AID PROJECT

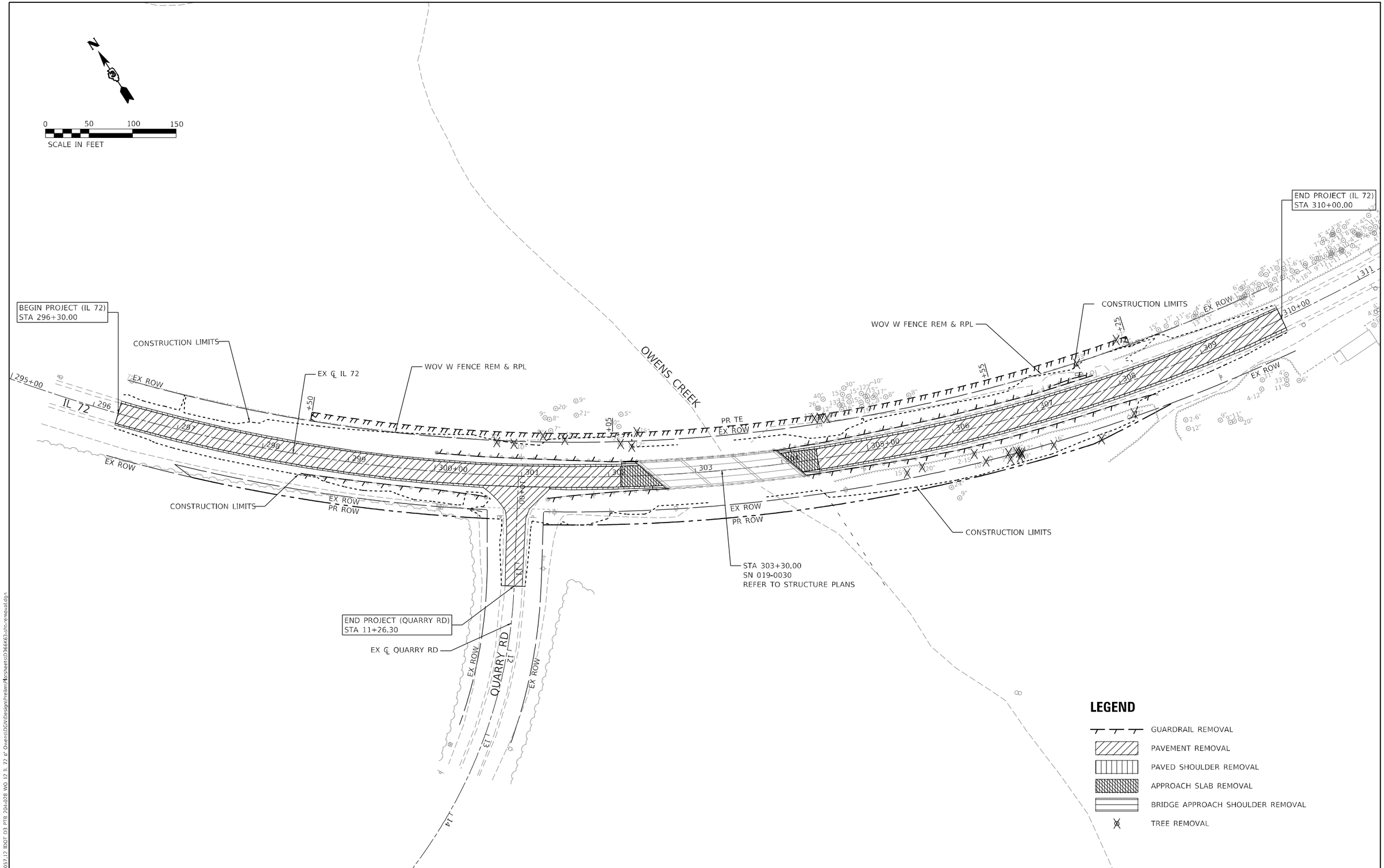

MODEL: Default
FILE NAME: 2:\22037.12 IDOT D3 PTB 204-028 WO 12 IL 72 @ Owens\DGN\Design\Preliminary\Sheets\D36K63-sht-removal.dgn

EFK•Moen
Civil Engineering Design

USER NAME = skierpiec	DESIGNED - SK	REVISED -
	DRAWN - SK	REVISED -
PLOT SCALE = 100.0000 ' / in.	CHECKED - JH	REVISED -
PLOT DATE = 3/12/2025	DATE - 3/12/2025	REVISED -

STATE OF ILLINOIS
DEPARTMENT OF TRANSPORTATION

IL 72 OVER OWENS CREEK
REMOVAL PLAN

SCALE: SHEET OF SHEETS STA. TO STA.

F.A.P. RTE.	SECTION	COUNTY	TOTAL SHEETS	SHEET NO.
553	(125BR)ES	DEKALB	96	24

CONTRACT NO. 66K63

ILLINOIS | FED. AID PROJECT

LEGEND

1. PR HMA PAVT FD 9.75
2. PR AGG SUBGRADE IMPR 12
3. NOT USED
4. PR HMA SHOULDERS 9 3/4
5. PR AGGREGATE SHLDS B9.75
6. SPBGR TY A 9FT POSTS
7A. TR BAR TRM T1 SPL TAN
7B. TR BAR TRM T1 SPL FLR
8. TRAF BAR TERM T6
9. PVT CON HMA BR APP SL
10A. PR HMA SC IL-9.5 C N50, 1.5"
10B. PR HMA BC IL-19.0 N50, 2.25"
11. PR AGG BASE CSE B 12
12. PR 8 AGG SURF COURSE TY B

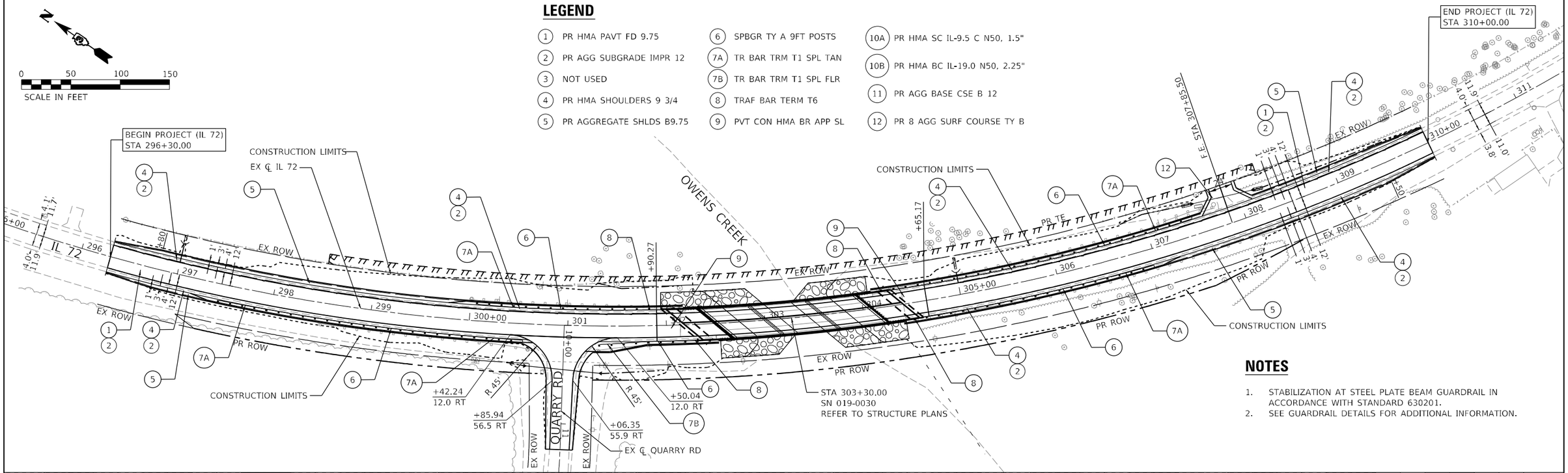

NOTES

1. STABILIZATION AT STEEL PLATE BEAM GUARDRAIL IN ACCORDANCE WITH STANDARD 630201.
2. SEE GUARDRAIL DETAILS FOR ADDITIONAL INFORMATION.

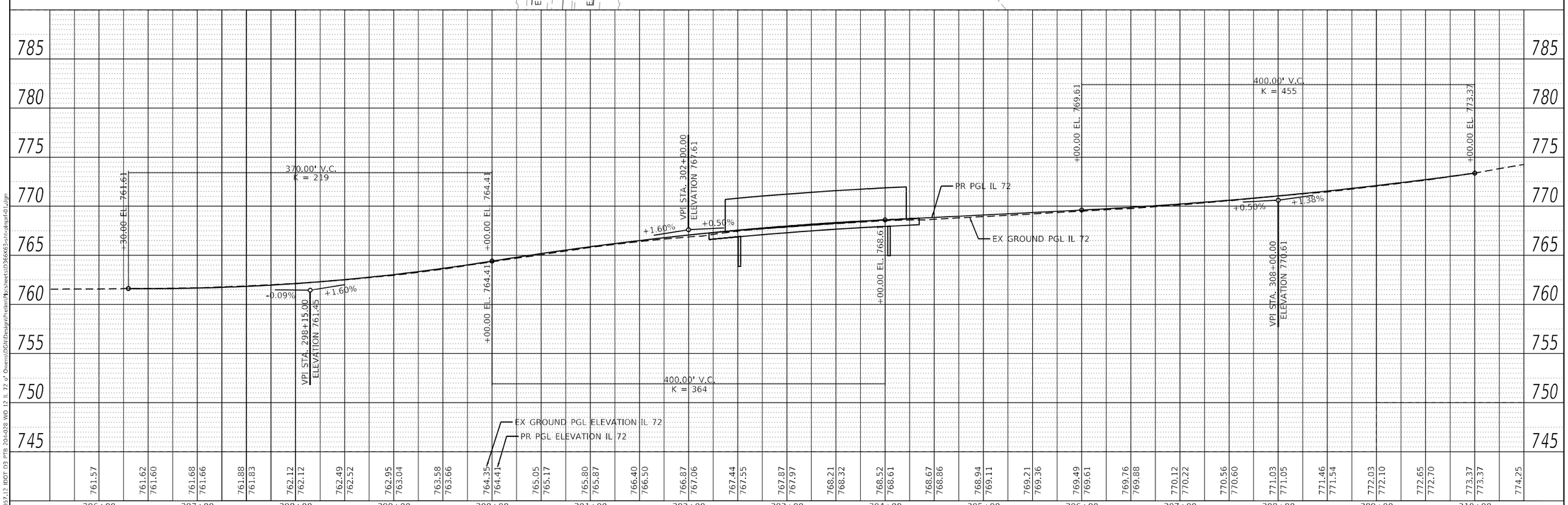

PLAN	SURVEYED	PLOTTED	ALIGNMENT CHECKED	R/W CHECKED	CADD FILE NAME	NOTE BOOK NO.	BY	DATE

PROFILE	SURVEYED	PLOTTED	VERTICAL ALIGN. CHECKED	STRUCTURE NOTATIONS CHKD	NOTE BOOK NO.	BY	DATE

MODEL: Default
FILE NAME: Z:\22057.12 IDOT D3 PTB 201-028 WO 12 IL 72 o' Owens\DGN\Design\Prelim\Plansheets\D366K63-sht-plnprf-01.dgn

EFK♦Moen
Civil Engineering Design

USER NAME = skierpiec	DESIGNED - SK	REVISED -	
	DRAWN - SK	REVISED -	
PLOT SCALE = 100.0000 ' / in.	CHECKED - JH	REVISED -	
PLOT DATE = 3/24/2025	DATE - 3/24/2025	REVISED -	

STATE OF ILLINOIS
DEPARTMENT OF TRANSPORTATION

IL 72 OVER OWENS CREEK
PLAN AND PROFILE – IL 72

SCALE: SHEET OF SHEETS STA. TO STA.

F.A.P. RTE.	SECTION	COUNTY	TOTAL SHEETS	SHEET NO.
553	(125BR)ES	DEKALB	96	25

CONTRACT NO. 66K63

ILLINOIS FED. AID PROJECT

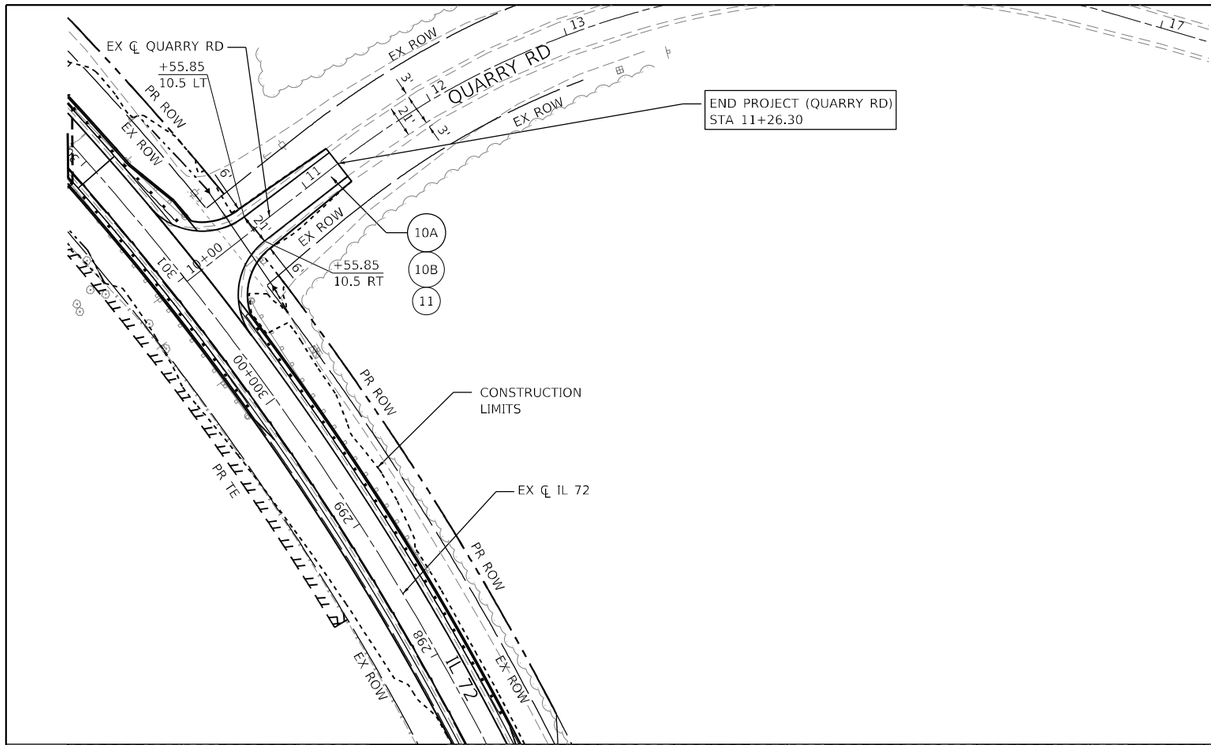

LEGEND

1. PR HMA PAVT FD 9.75
2. PR AGG SUBGRADE IMPR 12
3. NOT USED
4. PR HMA SHOULDERS 9 3/4
5. PR AGGREGATE SHLDS B9.75
6. SPBGR TY A 9FT POSTS
7A. TR BAR TRM T1 SPL TAN
7B. TR BAR TRM T1 SPL FLR
8. TRAF BAR TERM T6
9. PVT CON HMA BR APP SL
10A. PR HMA SC IL-9.5 C N50, 1.5"
10B. PR HMA BC IL-19.0 N50, 2.25"
11. PR AGG BASE CSE B 12
12. PR 8 AGG SURF COURSE TY B

N

0 50 100 150
SCALE IN FEET

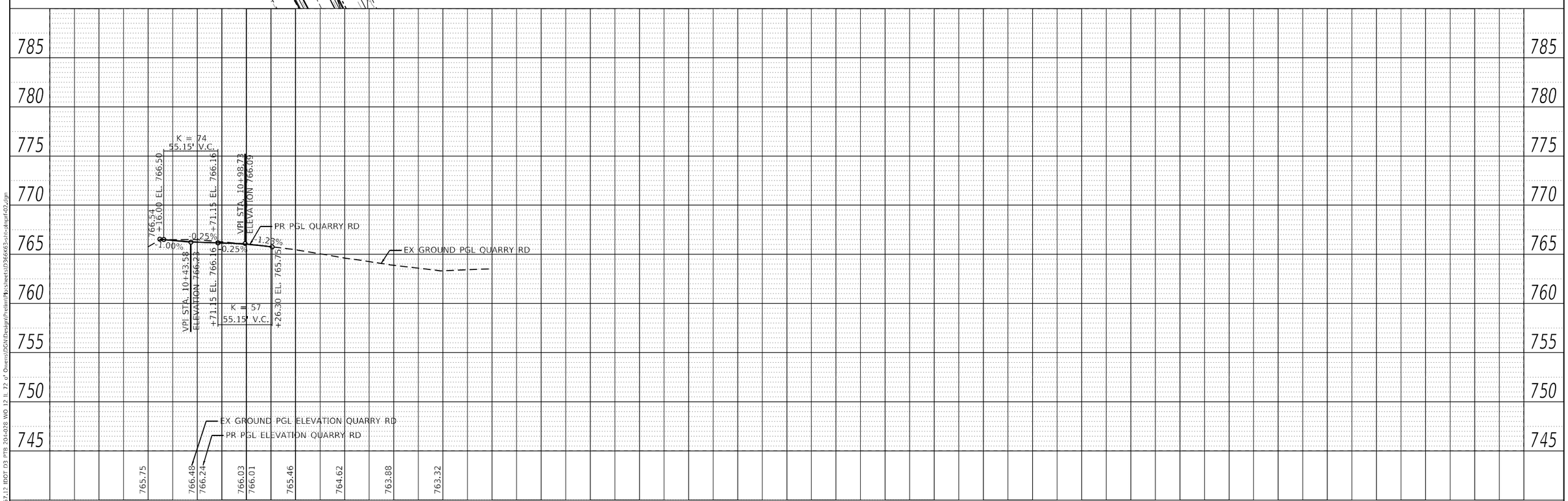

PLAN — SURVEYED / PLOTTED / ALIGNMENT CHECKED / R.O.W. CHECKED / CADD FILE NAME / NOTE BOOK NO. / BY / DATE

PROFILE — SURVEYED / PLOTTED / GRADES CHECKED / B.M. NOTED / STRUCTURE NOTATIONS CHKD / NOTE BOOK NO. / BY / DATE

MODEL: Default
FILE NAME: Z:\22057.12 IDOT D3 PTB 201-028 WO 12 IL 72 o' Owens\DGN\Design\Prelim\Plansheets\D366K63-sht-dnpvf-02.dgn

EFK♦Moen
Civil Engineering Design

USER NAME = skierpiec	DESIGNED - SK	REVISED -	
	DRAWN - SK	REVISED -	
PLOT SCALE = 100.0000 ' / in.	CHECKED - JH	REVISED -	
PLOT DATE = 3/24/2025	DATE - 3/24/2025	REVISED -	

STATE OF ILLINOIS
DEPARTMENT OF TRANSPORTATION

IL 72 OVER OWENS CREEK
PLAN AND PROFILE – QUARRY ROAD

SCALE: SHEET OF SHEETS STA. TO STA.

F.A.P. RTE.	SECTION	COUNTY	TOTAL SHEETS	SHEET NO.
553	(125BR)ES	DEKALB	96	26
		CONTRACT NO. 66K63		
		ILLINOIS	FED. AID PROJECT	

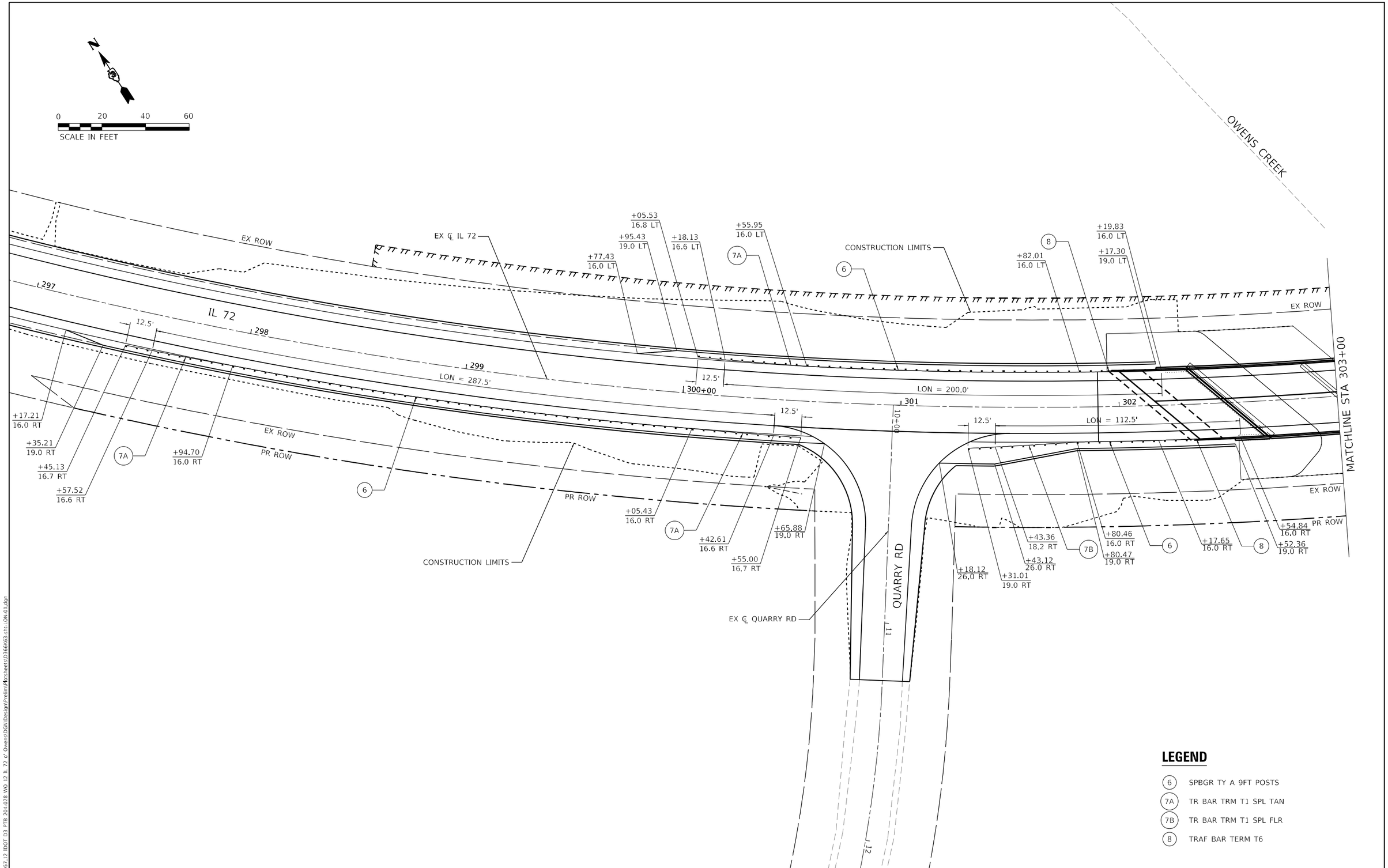

LEGEND

- (6) SPBGR TY A 9FT POSTS
- (7A) TR BAR TRM T1 SPL TAN
- (7B) TR BAR TRM T1 SPL FLR
- (8) TRAF BAR TERM T6

MODEL: Default
FILE NAME: 2:\22037.12 IDOT D3 PTB 204-028 WO 12 IL 72 o' Owens\DGN\Design\Prelim\Plansheet\D366K63-sht-LON-01.dgn

EFK•Moen
Civil Engineering Design

USER NAME = skierpiec	DESIGNED - SK	REVISED -	
	DRAWN - SK	REVISED -	
PLOT SCALE = 40.0000 ' / in.	CHECKED - JH	REVISED -	
PLOT DATE = 3/24/2025	DATE - 3/24/2025	REVISED -	

STATE OF ILLINOIS
DEPARTMENT OF TRANSPORTATION

IL 72 OVER OWENS CREEK
PROPOSED PLAN GUARDRAIL DETAILS

SCALE: | SHEET OF SHEETS | STA. TO STA.

F.A.P. RTE.	SECTION	COUNTY	TOTAL SHEETS	SHEET NO.
553	(125BR)ES	DEKALB	96	27
		CONTRACT NO. 66K63		
	ILLINOIS	FED. AID PROJECT		

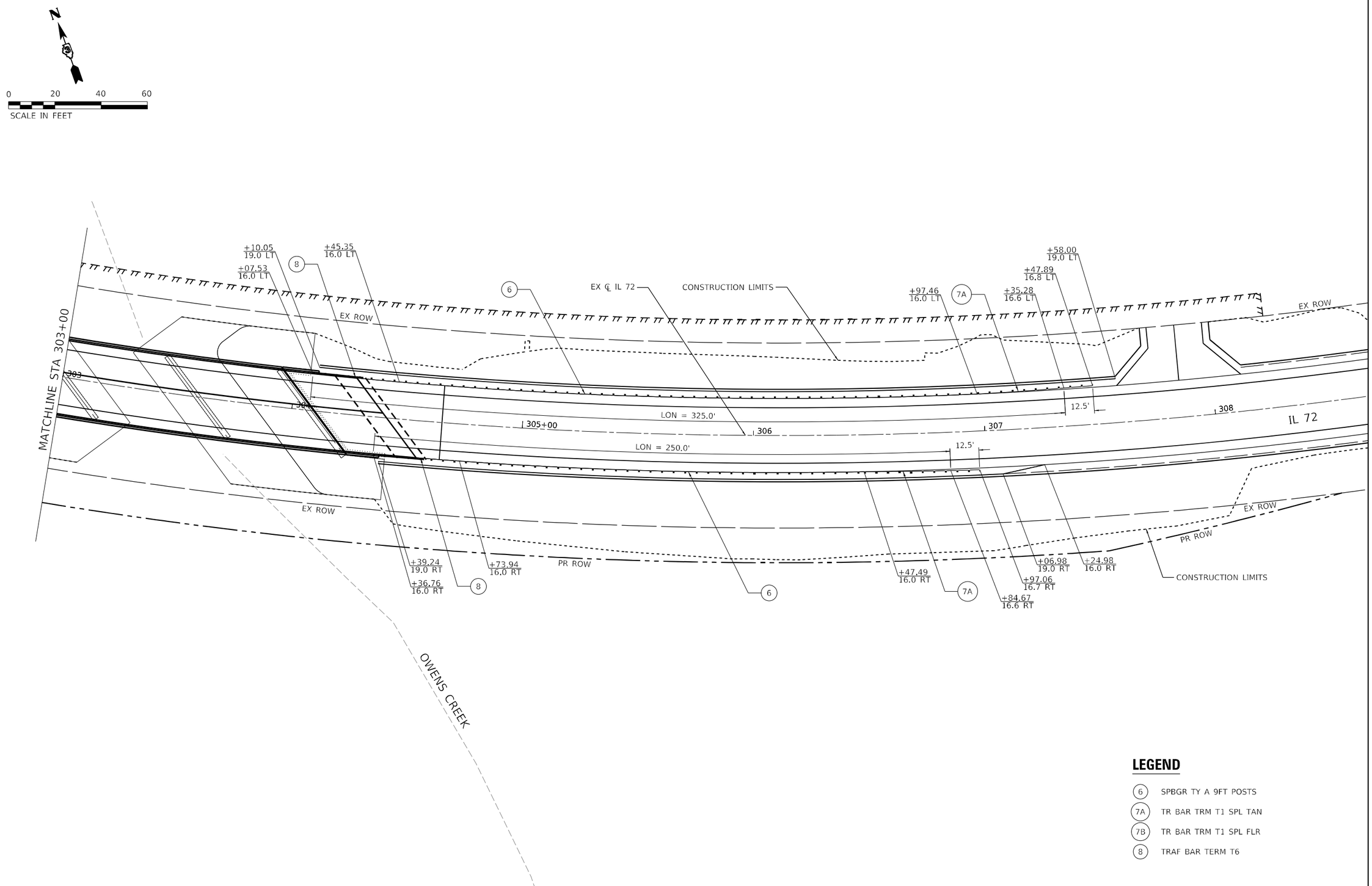

LEGEND

- (6) SPBGR TY A 9FT POSTS
- (7A) TR BAR TRM T1 SPL TAN
- (7B) TR BAR TRM T1 SPL FLR
- (8) TRAF BAR TERM T6

MODEL: Default
FILE NAME: 2:\22057.12 IDOT D3 PTB 204-028 WO 12 IL 72 @ Owens\DGN\Design\Prelim\Plansheets\0366K63-sht-L01-02.dgn

EFK•Moen
Civil Engineering Design

USER NAME = skierpiec	DESIGNED - SK	REVISED -	
	DRAWN - SK	REVISED -	
PLOT SCALE = 40.0000 ' / in.	CHECKED - JH	REVISED -	
PLOT DATE = 3/24/2025	DATE - 3/24/2025	REVISED -	

STATE OF ILLINOIS
DEPARTMENT OF TRANSPORTATION

IL 72 OVER OWENS CREEK
PROPOSED PLAN GUARDRAIL DETAILS

SCALE: SHEET OF SHEETS STA. TO STA.

F.A.P. RTE.	SECTION	COUNTY	TOTAL SHEETS	SHEET NO.
553	(125BR)ES	DEKALB	96	28

CONTRACT NO. 66K63

ILLINOIS FED. AID PROJECT

STAGING GENERAL NOTES

1. THE STAGING PLANS SHALL SERVE AS A GUIDE FOR THE SAFE DIVERSION OF TRAFFIC DURING EXECUTION OF THE CONTRACT. THE CONTRACTOR MAY MODIFY THE STAGING PLANS TO MEET CONSTRUCTION NEEDS, BUT NOT AT THE EXPENSE OF PUBLIC SAFETY OR CONVENIENCE. ANY CHANGES TO THE TRAFFIC CONTROL SHALL BE SUBMITTED TO THE ENGINEER FOR REVIEW AND APPROVAL.

2. ALL EXISTING AND TEMPORARY PAVEMENT MARKINGS FROM PRIOR STAGES THAT ARE IN CONFLICT SHALL BE REMOVED.

3. ANY RAISED REFLECTIVE PAVEMENT MARKERS THAT CONFLICT WITH THE TEMPORARY TRAFFIC LANES MUST HAVE THE REFLECTIVE LENSES REMOVED AS DIRECTED BY THE ENGINEER.

4. SIGNS DESIGNATED AS (O) SHALL HAVE FLUORESCENT ORANGE SHEETING MATERIAL WITH BLACK LETTERING.

5. THE CONTRACTOR SHALL REMOVE OR COVER ALL EXISTING SIGNS THAT CONFLICT WITH OR DO NOT APPLY TO THE REVISED TRAFFIC PATTERNS AND SHALL RESTORE THE SIGNS AT THE END OF CONSTRUCTION AS DIRECTED BY THE ENGINEER. DO NOT PLACE TAPE OR DRILL INTO THE FACE OF THE SIGN WHEN COVERING.

6. CONTRACTOR SHALL STORE ANY UNUSED TEMPORARY CONCRETE BARRIER WALLS OUTSIDE OF THE CLEAR ZONE OR OUTSIDE OF THE PROJECT LIMITS. THE STORAGE OF UNUSED TEMPORARY CONCRETE BARRIER WALLS SHALL NOT POSE A HAZARD TO MOTORISTS OR ABUTTING PROPERTIES/APPURTENANCES.

STAGING SEQUENCE OF CONSTRUCTION

PRE-STAGE

TRAFFIC - IL 72

1. UTILIZE STANDARD 701326 TO CLOSE EB LANE.

TRAFFIC - QUARRY RD

1. UTILIZE STANDARD 701326 TO ALTERNATE CLOSURE OF THE NB AND SB LANES.

CONSTRUCTION - IL 72

1. REMOVE EX EB SHOULDER.

2. CONSTRUCT TEMPORARY PAVEMENT AND AGGREGATE FOR TEMPORARY ACCESS.

CONSTRUCTION - QUARRY RD

1. CONSTRUCT TEMPORARY PAVEMENT.

STAGE 1

TRAFFIC - IL 72

1. UTILIZE STANDARD 701321 AND THE STAGING PLANS TO INSTALL TEMPORARY SIGNALS, TEMPORARY CONCRETE BARRIER, AND OTHER TRAFFIC CONTROL DEVICES.

2. OUTSIDE OF BRIDGE LIMITS, MAINTAIN ONE 10' LANE WITH 1' SHOULDERS ON EX EB PAVEMENT AND TEMPORARY PAVEMENT.

3. WITHIN BRIDGE LIMITS, MAINTAIN ONE 10' LANE WITH 1' INSIDE SHOULDER AND 2' OUTSIDE SHOULDER ON EX PAVEMENT.

TRAFFIC - QUARRY RD

1. UTILIZE STANDARD 701321 AND THE STAGING PLANS TO INSTALL TEMPORARY SIGNALS AND OTHER TRAFFIC CONTROL DEVICES.

2. MAINTAIN EX NB AND SB LANES.

CONSTRUCTION - IL 72

1. REMOVE EX WB PAVEMENT, SHOULDERS, BRIDGE SUPERSTRUCTURE, GUARDRAIL, AND OTHER APPURTENANCES.

2. CONSTRUCT PR WB PAVEMENT (OMIT SURFACE COURSE) AND SHOULDERS (WITH SURFACE COURSE), BRIDGE SUPERSTRUCTURE, GUARDRAIL, GRADING, AND OTHER APPURTENANCES.

3. CONSTRUCT TEMPORARY RAMP SPECIAL AT WB EOP. SEE TYPICAL SECTIONS DETAILS.

CONSTRUCTION - QUARRY RD

1. NONE.

STAGING SEQUENCE OF CONSTRUCTION (CONTINUED)

STAGE 2

TRAFFIC - IL 72

1. UTILIZE STANDARD 701321 AND THE STAGING PLANS TO INSTALL TEMPORARY SIGNALS, TEMPORARY CONCRETE BARRIER, AND OTHER TRAFFIC CONTROL DEVICES.

2. OUTSIDE OF BRIDGE LIMITS, MAINTAIN ONE 10' LANE WITH 0.5' INSIDE SHOULDER AND 1' OUTSIDE SHOULDER ON PR WB PAVEMENT AND SHOULDER.

3. WITHIN BRIDGE LIMITS, MAINTAIN ONE 10' LANE WITH 1' SHOULDERS ON PR WB PAVEMENT AND SHOULDER.

TRAFFIC - QUARRY RD

1. UTILIZE STANDARD BLR 21 TO CLOSE QUARRY RD.

CONSTRUCTION - IL 72

1. REMOVE EX EB PAVEMENT, SHOULDERS, BRIDGE SUPERSTRUCTURE, GUARDRAIL, TEMPORARY PAVEMENT AND OTHER APPURTENANCES WITHIN PROJECT LIMITS.

2. CONSTRUCT PR EB PAVEMENT (WITH SURFACE COURSE) AND SHOULDERS (WITH SURFACE COURSE), BRIDGE SUPERSTRUCTURE, GUARDRAIL, GRADING, AND OTHER APPURTENANCES WITHIN PROJECT LIMITS.

CONSTRUCTION - QUARRY RD

1. REMOVE EX PAVEMENT AND OTHER APPURTENANCES.

2. CONSTRUCT PR PAVEMENT (WITH SURFACE COURSE), GRADING, AND OTHER APPURTENANCES.

POST-STAGE A

TRAFFIC - IL 72

1. UTILIZE STANDARD 701326 TO CLOSE EB LANE AT PE STA 311+29.

TRAFFIC - QUARRY RD

1. MAINTAIN PR NB AND SB LANES.

CONSTRUCTION - IL 72

1. REMOVE AGGREGATE FOR TEMPORARY ACCESS AND RESTORE GRADING TO EXISTING CONDITIONS AT PE STA 311+29.

CONSTRUCTION - QUARRY RD

1. NONE.

POST-STAGE B

TRAFFIC - IL 72

1. UTILIZE STANDARDS 701301, 701306, AND 701311 TO ALTERNATE CLOSURE OF THE EB AND WB LANES.

TRAFFIC - QUARRY RD

1. UTILIZE STANDARDS 701301, 701306, AND 701311 TO ALTERNATE CLOSURE OF THE NB AND SB LANES.

CONSTRUCTION - IL 72

1. OUTSIDE OF BRIDGE LIMITS, PLACE HMA SURFACE COURSE ON WB PAVEMENT.

2. INSTALL RUMBLE STRIPS.

3. PLACE FINAL PAVEMENT MARKINGS.

CONSTRUCTION - QUARRY RD

1. PLACE FINAL PAVEMENT MARKINGS.

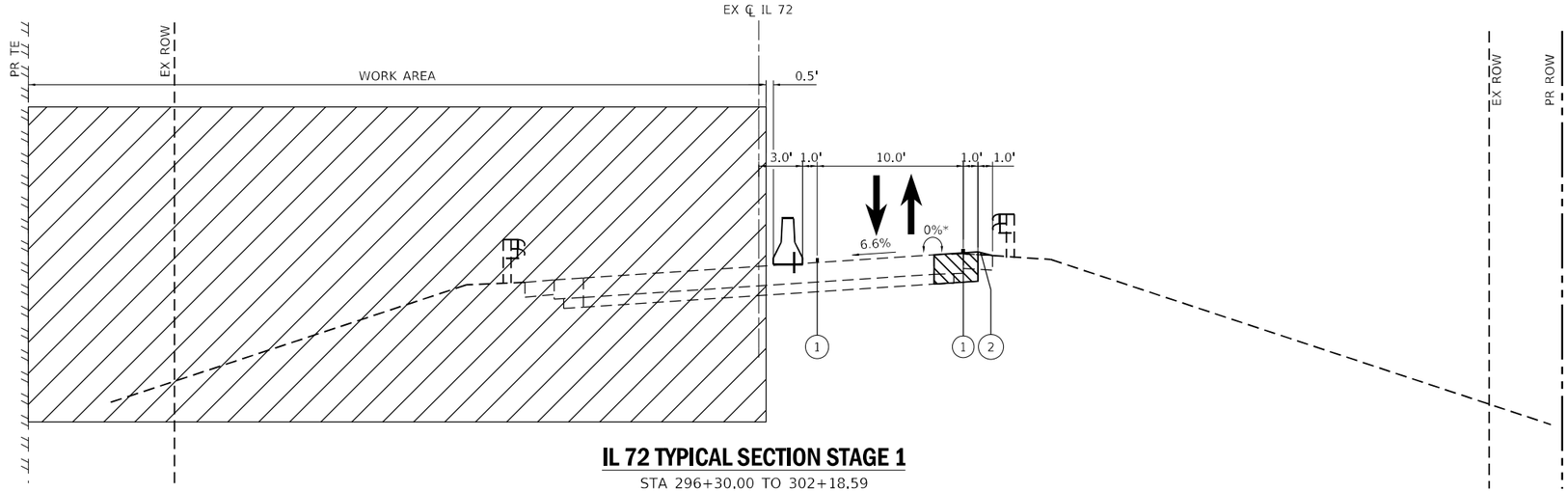

IL 72 TYPICAL SECTION STAGE 1

STA 296+30.00 TO 302+18.59
STA 304+41.18 TO 310+00.00
(FACING SOUTH/SOUTHEAST)

* TEMPORARY PAVEMENT TRANSITIONS AT THE PROJECT LIMITS, SIDE ROAD AND BRIDGE APPROACHES.
STA 296+30.02 @ +2.1% TO STA 296+75.02 @ +6.6% MAX (45' TRANSITION)
STA 299+84.69 @ +6.6% MAX TO STA 300+56.69 @ -0.6% (72' TRANSITION)
STA 301+32.47 @ -2.4% TO STA 302+49.91 @ +5.4% (117' TRANSITION)
STA 304+41.62 @ +6.6% EX (NO TRANSITION)
STA 309+54.33 @ +6.6% MAX TO STA 310+00.33 @ +2.0% (46' TRANSITION)

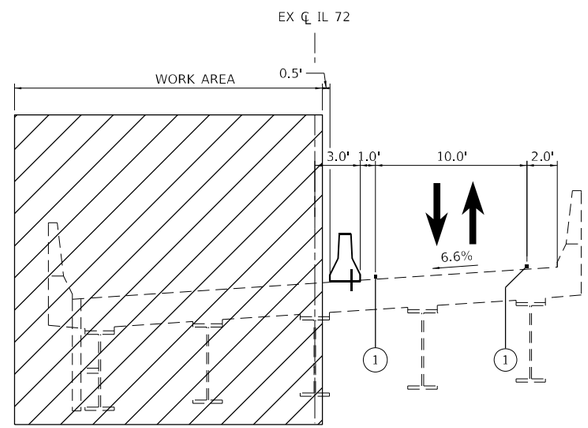

IL 72 BRIDGE TYPICAL SECTION STAGE 1

STA 302+18.59 TO 304+41.18
SN 019-0030
(FACING SOUTHEAST)

LEGEND

- TEMPORARY CONCRETE BARRIER
- TEMPORARY CONCRETE BARRIER (PINNED ON TRAFFIC SIDE)
- WORK AREA
- TEMPORARY PAVEMENT (SEE NOTE 1)
- WORK COMPLETED IN PREVIOUS STAGES
- (1) TEMPORARY PAVEMENT MARKING - TAPE TYPE IV - LINE 4" (SOLID WHITE)
- (2) AGGREGATE WEDGE SHOULDER, TYPE B
- (3) TEMPORARY RAMP SPECIAL (SEE TYPICAL SECTIONS DETAILS)

NOTES

1. TEMPORARY PAVEMENT CONSISTS OF:
   - HMA SURFACE COURSE, MIX C, N50, 2"
   - HMA BINDER COURSE, IL 19.0, N50, 6"
   - SUBBASE GRANULAR MATERIAL, TYPE A, 4"

MODEL: Default
FILE NAME: P:\2025\7.12 IDOT D3 PTB 204-028 WO 12 IL 72 o' Owens\DGN\Design\Preliminl\Rec-sheets\D366K63-sht-staging-typicals1.dgn

EFK•Moen Civil Engineering Design	USER NAME = skierpiec	DESIGNED - SK	REVISED -	STATE OF ILLINOIS DEPARTMENT OF TRANSPORTATION	IL 72 OVER OWENS CREEK STAGING PLAN – TYPICAL SECTIONS	F.A.P. RTE.	SECTION	COUNTY	TOTAL SHEETS / SHEET NO.
		DRAWN - SK	REVISED -			553	(125BR)ES	DEKALB	96 / 30
	PLOT SCALE = 10.0000 ' / in.	CHECKED - JH	REVISED -					CONTRACT NO. 66K63	
	PLOT DATE = 3/12/2025	DATE - 3/12/2025	REVISED -		SCALE: SHEET OF SHEETS STA. TO STA.		ILLINOIS	FED. AID PROJECT	

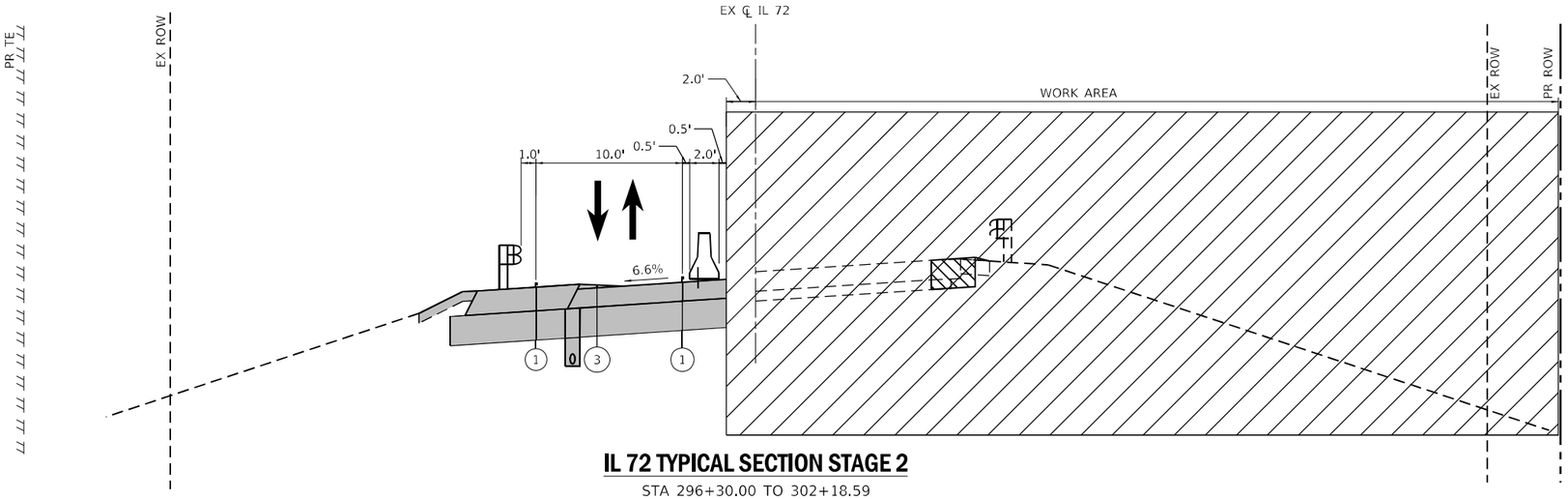

IL 72 TYPICAL SECTION STAGE 2

STA 296+30.00 TO 302+18.59
STA 304+41.18 TO 310+00.00
(FACING SOUTH/SOUTHEAST)

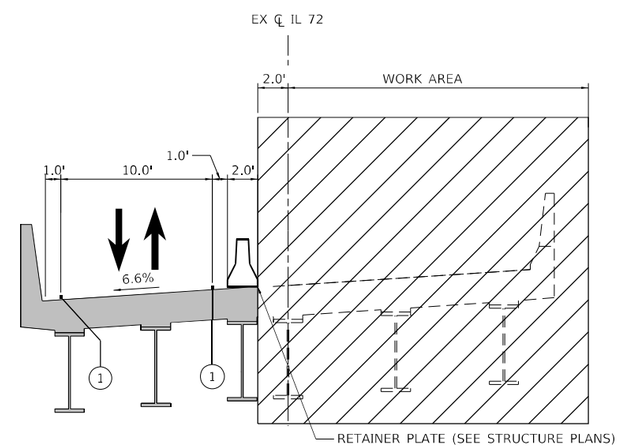

IL 72 BRIDGE TYPICAL SECTION STAGE 2

STA 302+18.59 TO 304+41.18
SN 019-0030
(FACING SOUTHEAST)

LEGEND

- TEMPORARY CONCRETE BARRIER
- TEMPORARY CONCRETE BARRIER (PINNED ON TRAFFIC SIDE)
- WORK AREA
- TEMPORARY PAVEMENT (SEE NOTE 1)
- WORK COMPLETED IN PREVIOUS STAGES
- (1) TEMPORARY PAVEMENT MARKING - TAPE TYPE IV - LINE 4" (SOLID WHITE)
- (2) AGGREGATE WEDGE SHOULDER, TYPE B
- (3) TEMPORARY RAMP SPECIAL (SEE TYPICAL SECTIONS DETAILS)

NOTES

1. TEMPORARY PAVEMENT CONSISTS OF:
   - HMA SURFACE COURSE, MIX C, N50, 2"
   - HMA BINDER COURSE, IL 19.0, N50, 6"
   - SUBBASE GRANULAR MATERIAL, TYPE A, 4"

MODEL: Default
FILE NAME: 7:\22057.12 IDOT D3 PTB 204-028 WO 12 IL 72 o' Owens\DGN\Design\Preliminary\Roadsheets\D366K63-sht-staging-typical.dgn

EFK•Moen Civil Engineering Design	USER NAME = skierpiec	DESIGNED - SK	REVISED -
		DRAWN - SK	REVISED -
	PLOT SCALE = 10.0000 ' / in.	CHECKED - JH	REVISED -
	PLOT DATE = 3/12/2025	DATE - 3/12/2025	REVISED -

STATE OF ILLINOIS
DEPARTMENT OF TRANSPORTATION

IL 72 OVER OWENS CREEK
STAGING PLAN – TYPICAL SECTIONS

SCALE: | SHEET OF SHEETS | STA. TO STA.

F.A.P. RTE.	SECTION	COUNTY	TOTAL SHEETS	SHEET NO.
553	(125BR)ES	DEKALB	96	31

CONTRACT NO. 66K63

ILLINOIS | FED. AID PROJECT

ADVANCE WIDTH RESTRICTION SIGNING FOR EB IL 72 AT IRENE RD

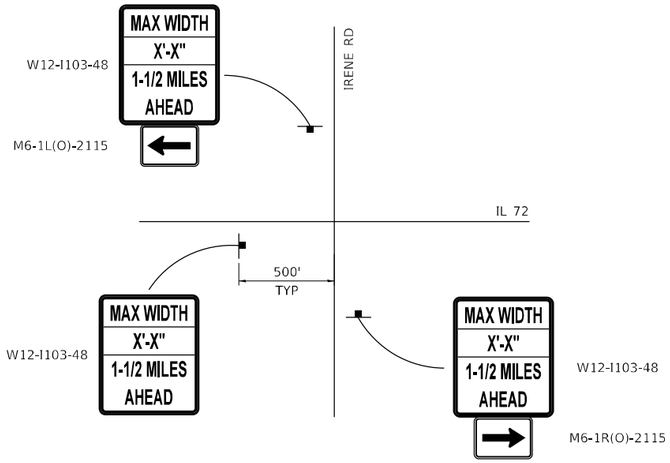

ADVANCE WIDTH RESTRICTION SIGNING FOR WB IL 72 AT MALTA RD & AT 6TH ST

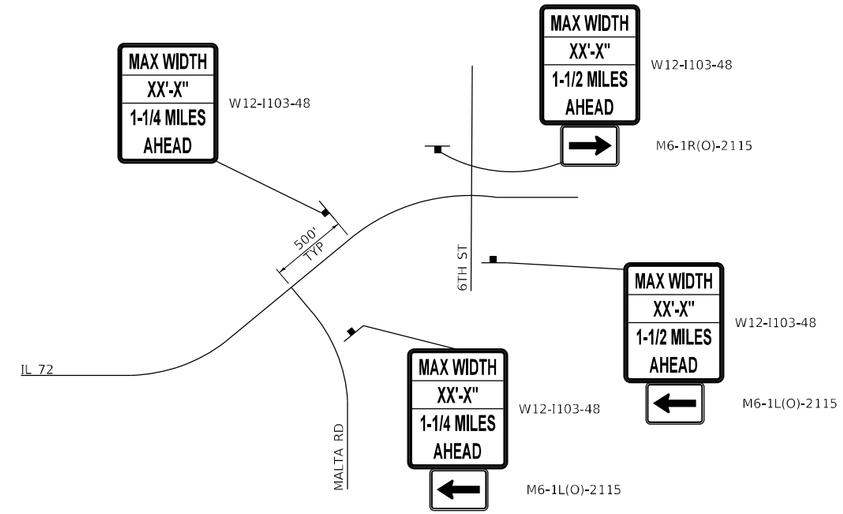

ADVANCE WIDTH RESTRICTION SIGNING FOR EB IL 72 AT I–39

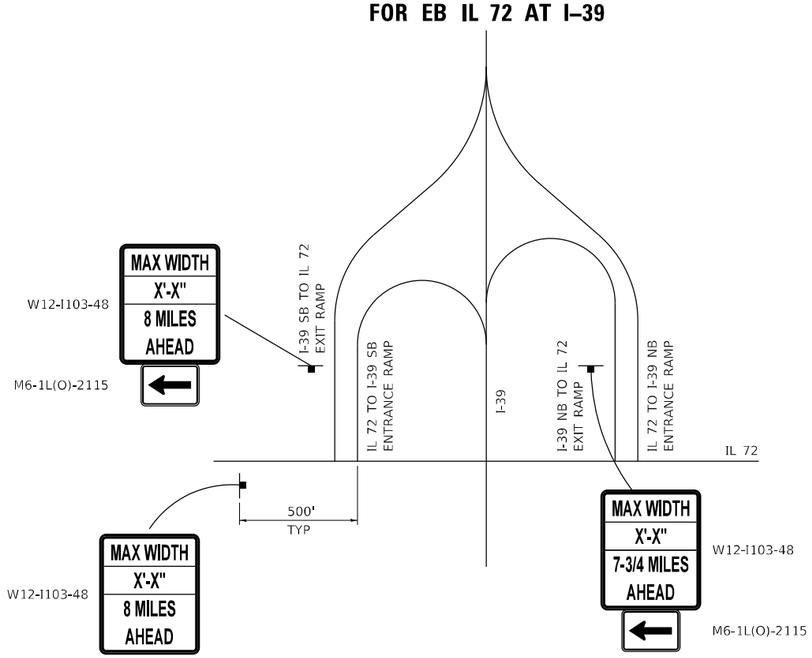

ADVANCE WIDTH RESTRICTION SIGNING FOR WB IL 72 AT IL 23

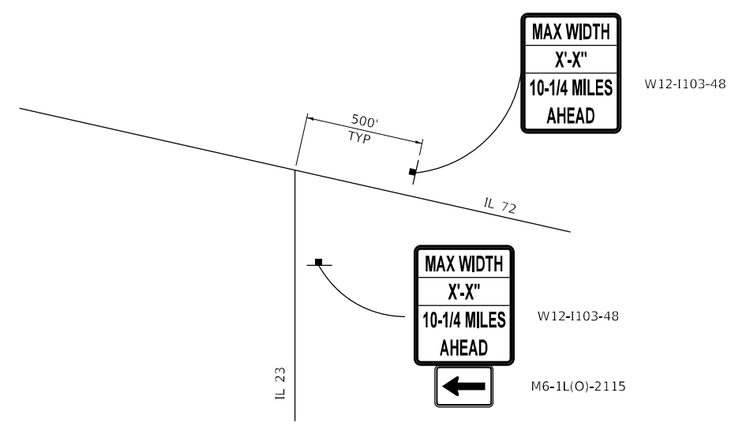

NOTES

1. X'-X" ON ADVANCE WIDTH RESTRICTION SIGNING SHALL BE 10'-6" IN STAGE 1 AND 10'-0" IN STAGE 2.

MODEL: Default
FILE NAME: 2:\22057.12 IDOT D3 PTB 204-028 WO 12 IL 72 O Owens\DGN\Design\Prelim\Plansheets\0366K63-sht-staging-detail.dgn

EFK•Moen Civil Engineering Design	USER NAME = skierpiec	DESIGNED - SK	REVISED -
		DRAWN - SK	REVISED -
	PLOT SCALE = 100.0000 ' / in.	CHECKED - JH	REVISED -
	PLOT DATE = 3/12/2025	DATE - 3/12/2025	REVISED -

STATE OF ILLINOIS
DEPARTMENT OF TRANSPORTATION

IL 72 OVER OWENS CREEK
STAGING PLAN – DETAIL – ADVANCE WIDTH RESTRICTION SIGNING

SCALE: SHEET OF SHEETS STA. TO STA.

F.A.P. RTE.	SECTION	COUNTY	TOTAL SHEETS	SHEET NO.
553	(125BR)ES	DEKALB	96	32
		CONTRACT NO. 66K63		
	ILLINOIS	FED. AID PROJECT		

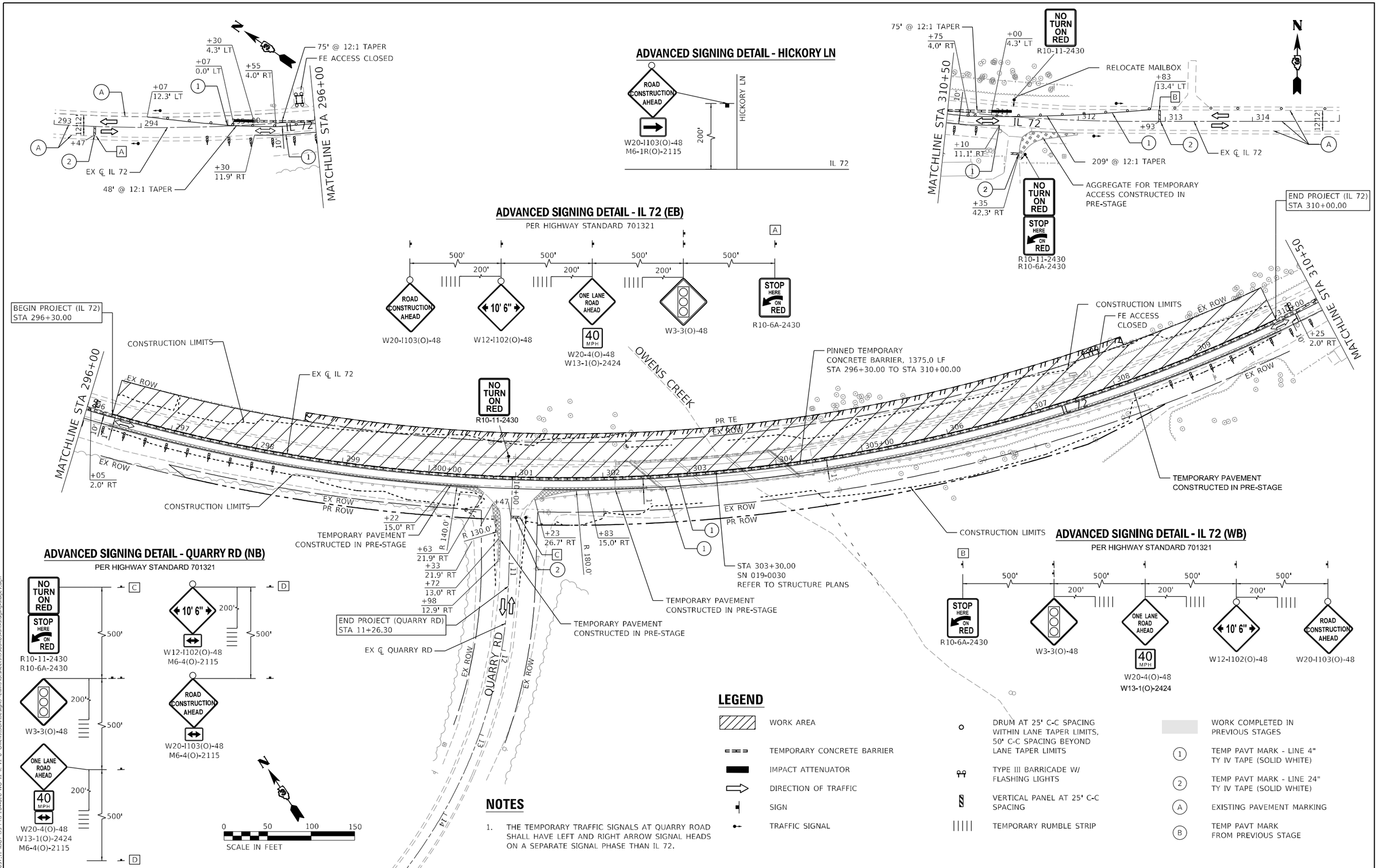

NOTES

1. THE TEMPORARY TRAFFIC SIGNALS AT QUARRY ROAD SHALL HAVE LEFT AND RIGHT ARROW SIGNAL HEADS ON A SEPARATE SIGNAL PHASE THAN IL 72.

MODEL: Default
FILE NAME: 2:\22037-12 IDOT D3 PTB 204-028 WO 12 IL 72 o' Owens\DGN\Design\Pelim\Plansheets\0366K63-sht-staging-stage1.dgn

EFK•Moen Civil Engineering Design	USER NAME = skierpiec	DESIGNED - SK	REVISED -	STATE OF ILLINOIS DEPARTMENT OF TRANSPORTATION
		DRAWN - SK	REVISED -	
	PLOT SCALE = 100.0000 ' / in.	CHECKED - JH	REVISED -	
	PLOT DATE = 3/12/2025	DATE - 3/12/2025	REVISED -	

IL 72 OVER OWENS CREEK
STAGING PLAN – STAGE 1

SCALE: | SHEET OF SHEETS | STA. TO STA.

F.A.P. RTE.	SECTION	COUNTY	TOTAL SHEETS	SHEET NO.
553	(125BR)ES	DEKALB	96	33

CONTRACT NO. 66K63

ILLINOIS | FED. AID PROJECT

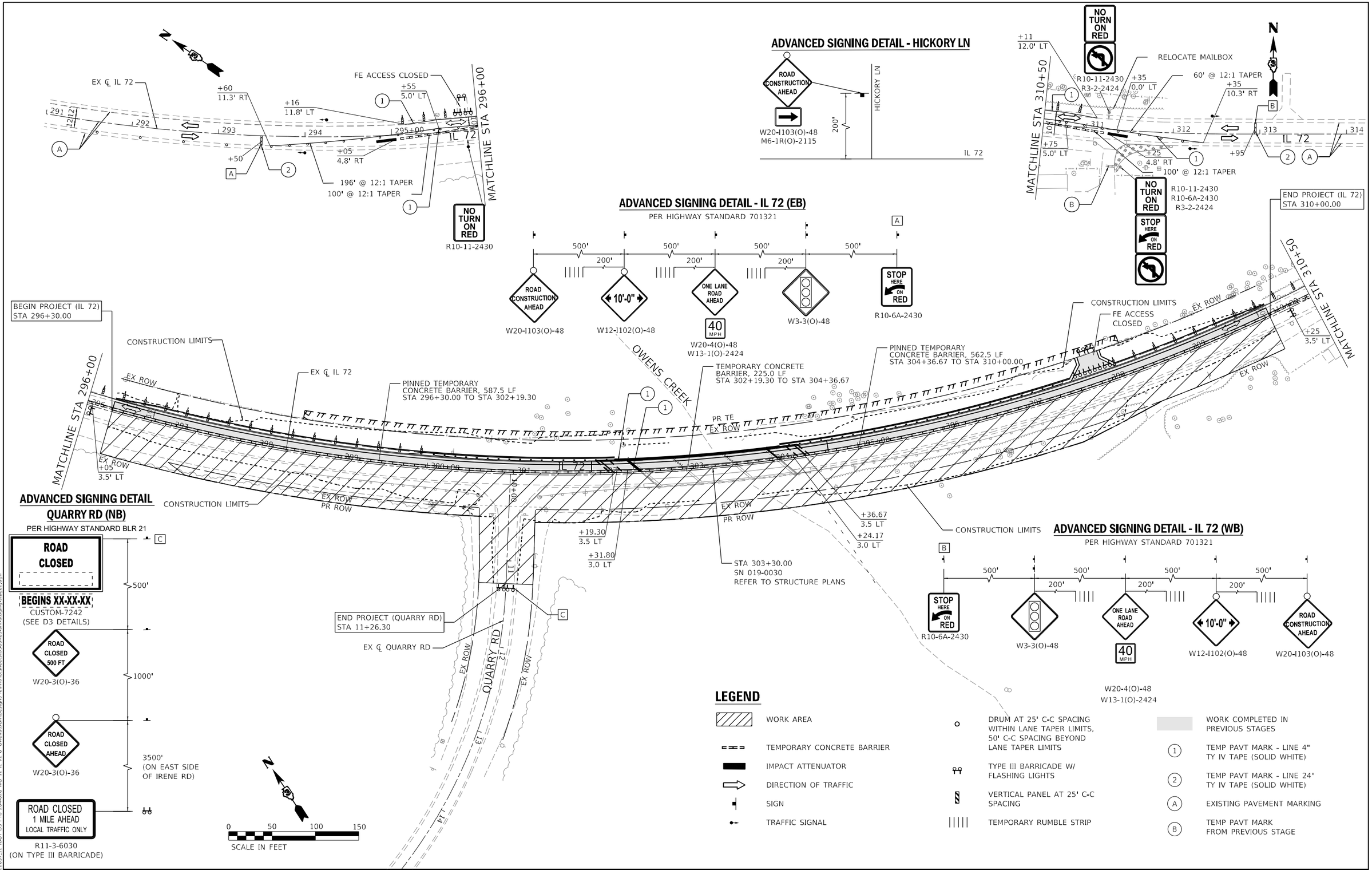

MODEL: Default
FILE NAME: Z:\2025\7.13 IDOT D3 PTB 204-028 WO 12 IL 72 @ Owens\DGN\Design\Preliminary\Plansheets\0366K63-lin-staging-stage2.dgn

EFK•Moen
Civil Engineering Design

USER NAME = skierpiec	DESIGNED - SK	REVISED -	
	DRAWN - SK	REVISED -	
PLOT SCALE = 100.0000 ' / in.	CHECKED - JH	REVISED -	
PLOT DATE = 3/24/2025	DATE - 3/24/2025	REVISED -	

STATE OF ILLINOIS
DEPARTMENT OF TRANSPORTATION

IL 72 OVER OWENS CREEK
STAGING PLAN – STAGE 2

SCALE: SHEET OF SHEETS STA. TO STA.

F.A.P. RTE.	SECTION	COUNTY	TOTAL SHEETS	SHEET NO.
553	(125BR)ES	DEKALB	96	34
		CONTRACT NO. 66K63		
	ILLINOIS	FED. AID PROJECT		

STATIONS & OFFSETS PERIMETER EROSION BARRIER							
STATION	OFFSET	STATION	OFFSET	STATION	OFFSET	STATION	OFFSET
296+30.00	18.65' RT	300+53.97	48.28' RT	301+30.00	43.24' LT	308+02.19	45.23' RT
296+39.96	18.68' RT	300+55.31	51.00' RT	302+28.26	34.42' LT	308+13.60	25.94' RT
296+67.43	20.44' RT	300+78.56	50.96' RT	302+58.83	34.42' LT	308+40.04	23.30' RT
296+72.35	20.88' RT	300+78.97	59.90' RT	301+08.41	126.43' RT	308+99.19	23.59' RT
296+79.89	22.39' RT	300+77.56	71.02' RT	301+12.51	71.38' RT	309+50.11	21.62' RT
297+20.00	23.26' RT	300+77.44	80.01' RT	301+12.93	60.27' RT	309+52.62	21.20' RT
298+43.81	24.07' RT	300+80.66	120.02' RT	301+14.13	52.21' RT	309+90.06	18.06' RT
298+67.22	23.70' RT	300+80.93	126.33' RT	301+34.20	56.0' RT	310+00.00	17.85' RT
298+72.18	26.33' RT	296+29.69	23.27' LT	302+01.76	43.04' RT	303+82.89	34.42' LT
298+92.38	29.16' RT	296+34.90	24.94' LT	302+05.50	42.23' RT	304+07.61	34.42' LT
299+04.93	30.46' RT	296+52.57	22.65' LT	302+19.90	44.57' RT	304+24.32	29.65' LT
299+20.63	31.39' RT	296+72.48	22.59' LT	302+39.29	45.15' RT	304+34.43	26.11' LT
299+50.50	28.66' RT	296+79.98	23.00' LT	302+44.20	44.10' RT	304+40.07	25.43' LT
299+52.66	28.81' RT	296+96.14	22.81' LT	302+55.42	36.42' RT	304+71.90	24.59' LT
299+59.75	30.85' RT	296+97.96	41.00' LT	302+87.57	36.42' RT	304+79.59	29.67' LT
299+77.75	35.15' RT	297+02.04	41.00' LT	304+17.07	36.42' RT	304+97.96	33.74' LT
299+79.95	35.45' RT	297+04.26	21.20' LT	304+38.61	36.42' RT	304+97.96	38.77' LT
300+00.82	35.71' RT	297+64.47	21.86' LT	304+47.28	46.26' RT	305+02.04	38.77' LT
300+24.96	37.41' RT	297+79.00	27.36' LT	304+99.95	49.82' RT	305+02.04	34.53' LT
300+30.03	37.36' RT	297+91.23	27.99' LT	305+45.85	52.37' RT	305+09.86	35.97' LT
300+35.84	37.02' RT	297+99.65	33.95' LT	305+91.44	54.42' RT	305+14.31	36.36' LT
300+35.84	39.64' RT	299+19.95	39.49' LT	306+20.02	54.73' RT	305+27.13	36.16' LT
300+45.14	43.60' RT	300+42.35	46.03' LT	306+57.31	52.78' RT	306+37.01	33.35' LT
300+47.12	44.42' RT	300+87.87	39.20' LT	307+01.60	52.93' RT	306+60.02	32.42' LT
300+50.72	45.57' RT	301+19.69	37.19' LT	307+79.35	47.62' RT	306+75.01	32.48' LT

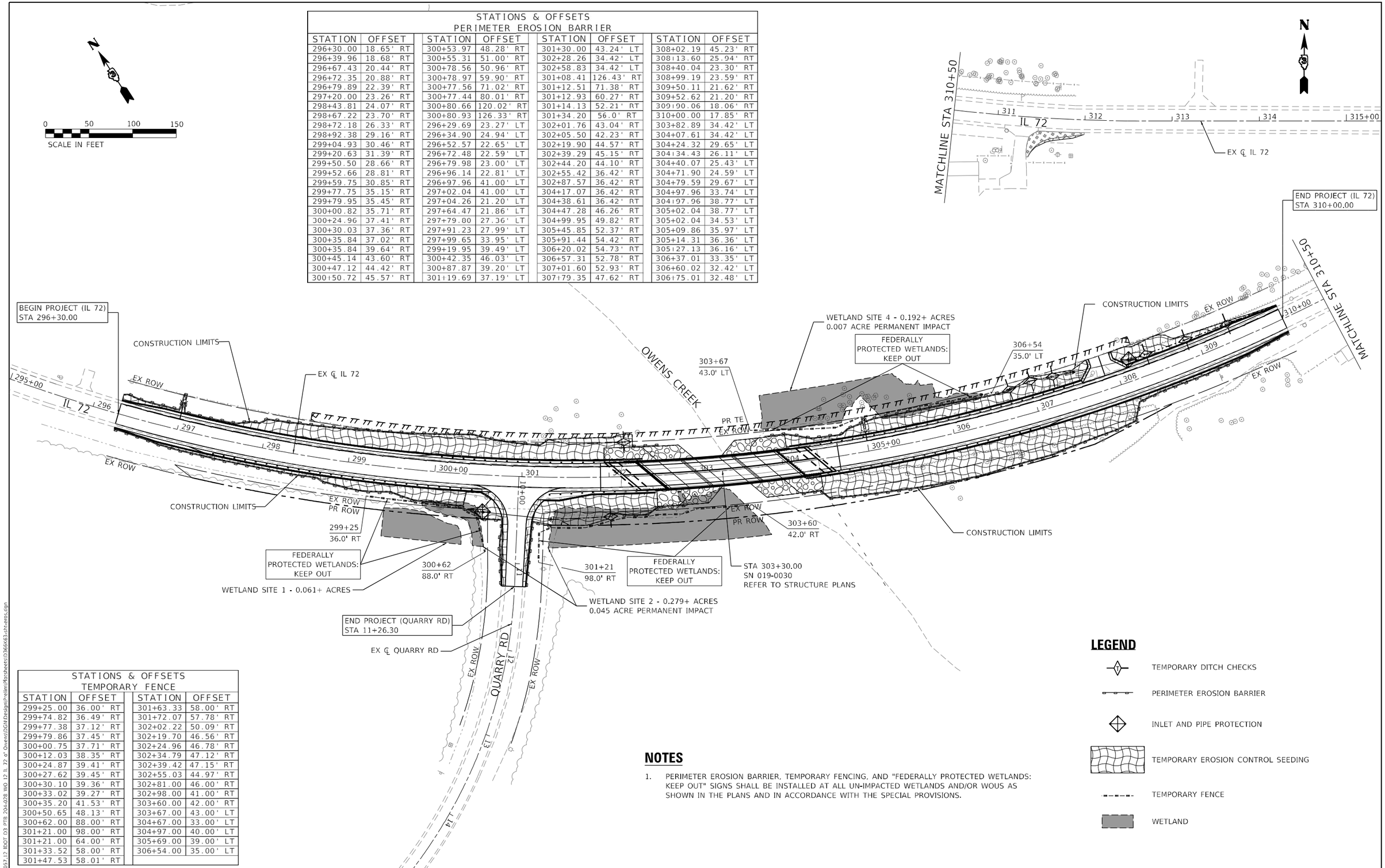

STATIONS & OFFSETS TEMPORARY FENCE			
STATION	OFFSET	STATION	OFFSET
299+25.00	36.00' RT	301+63.33	58.00' RT
299+74.82	36.49' RT	301+72.07	57.78' RT
299+77.38	37.12' RT	302+02.22	50.09' RT
299+79.86	37.45' RT	302+19.70	46.56' RT
300+00.75	37.71' RT	302+24.96	46.78' RT
300+12.03	38.35' RT	302+34.79	47.12' RT
300+24.87	39.41' RT	302+39.42	47.15' RT
300+27.62	39.45' RT	302+55.03	44.97' RT
300+30.10	39.36' RT	302+81.00	46.00' RT
300+33.02	39.27' RT	302+98.00	41.00' RT
300+35.20	41.53' RT	303+60.00	42.00' RT
300+50.65	48.13' RT	303+67.00	43.00' LT
300+62.00	88.00' RT	304+67.00	33.00' LT
301+21.00	98.00' RT	304+97.00	40.00' LT
301+21.00	64.00' RT	305+69.00	39.00' LT
301+33.52	58.00' RT	306+54.00	35.00' LT
301+47.53	58.01' RT		

LEGEND

- TEMPORARY DITCH CHECKS
- PERIMETER EROSION BARRIER
- INLET AND PIPE PROTECTION
- TEMPORARY EROSION CONTROL SEEDING
- TEMPORARY FENCE
- WETLAND

NOTES

1. PERIMETER EROSION BARRIER, TEMPORARY FENCING, AND "FEDERALLY PROTECTED WETLANDS: KEEP OUT" SIGNS SHALL BE INSTALLED AT ALL UN-IMPACTED WETLANDS AND/OR WOUS AS SHOWN IN THE PLANS AND IN ACCORDANCE WITH THE SPECIAL PROVISIONS.

MODEL: Default
FILE NAME: 7:\220057.12 IDOT D3 PTB 204-028 WO 12 IL 72 ø' Owens\DGN\Design\Preliminary\Sheets\0366K63-sht-eros.dgn

EFK•Moen
Civil Engineering Design

USER NAME = skierpiec	DESIGNED - SK	REVISED -
	DRAWN - SK	REVISED -
PLOT SCALE = 100.0000 ' / in.	CHECKED - JH	REVISED -
PLOT DATE = 3/24/2025	DATE - 3/24/2025	REVISED -

STATE OF ILLINOIS
DEPARTMENT OF TRANSPORTATION

IL 72 OVER OWENS CREEK
EROSION AND SEDIMENT CONTROL PLAN

SCALE: | SHEET OF SHEETS | STA. TO STA.

F.A.P. RTE.	SECTION	COUNTY	TOTAL SHEETS	SHEET NO.
553	(125BR)ES	DEKALB	96	35
		CONTRACT NO. 66K63		
		ILLINOIS	FED. AID PROJECT	

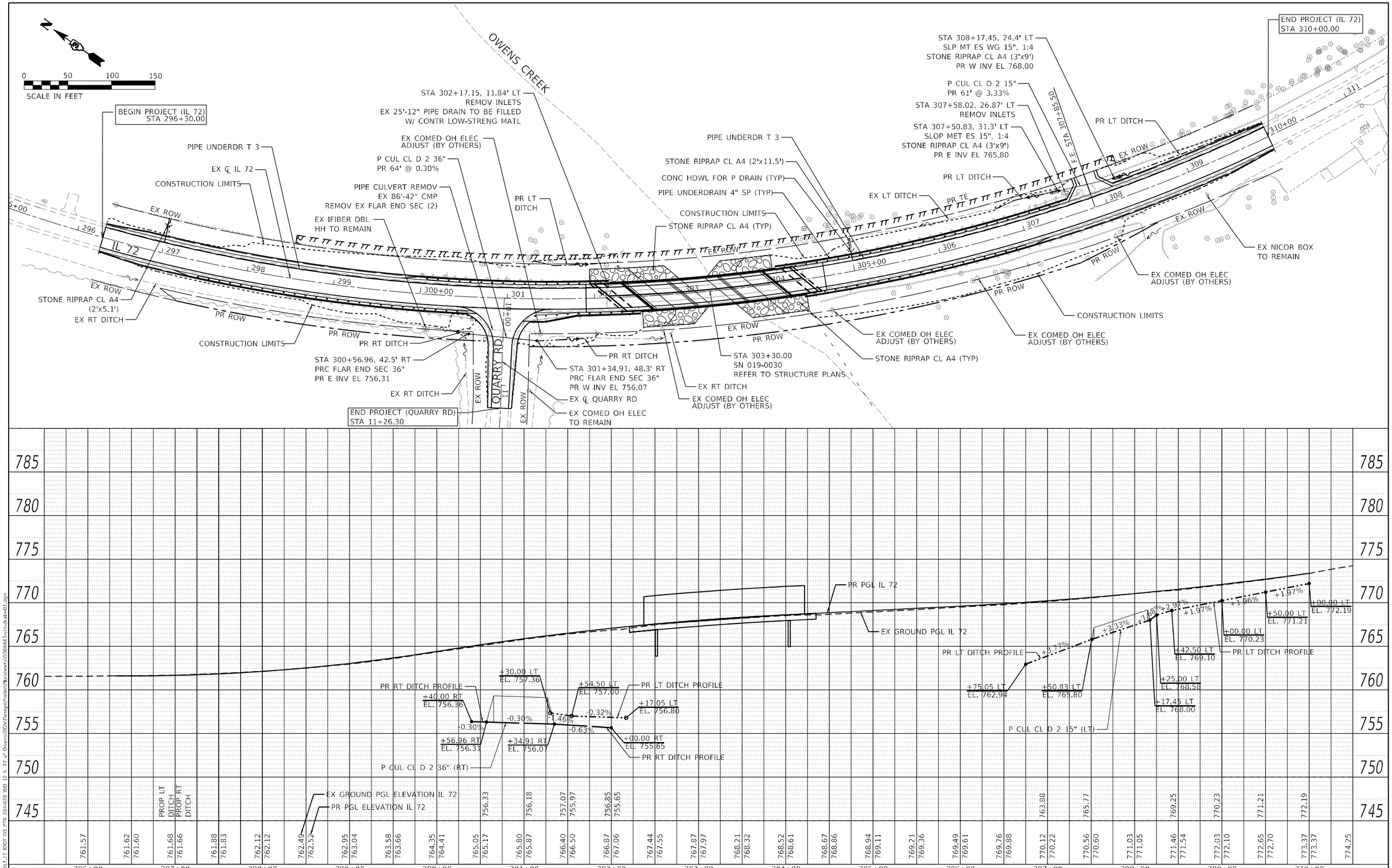

EFK♦Moen Civil Engineering Design	USER NAME = skierpiec	DESIGNED - SK	REVISED -
		DRAWN - SK	REVISED -
	PLOT SCALE = 100.0000 ' / in.	CHECKED - JH	REVISED -
	PLOT DATE = 3/24/2025	DATE - 3/24/2025	REVISED -

STATE OF ILLINOIS
DEPARTMENT OF TRANSPORTATION

IL 72 OVER OWENS CREEK
DRAINAGE AND UTILITY PLAN – IL 72

SCALE: SHEET OF SHEETS STA. TO STA.

F.A.P. RTE.	SECTION	COUNTY	TOTAL SHEETS	SHEET NO.
553	(125BR)ES	DEKALB	96	36
		CONTRACT NO. 66K63		
		ILLINOIS	FED. AID PROJECT	

PLAN — NOTE BOOK NO. — SURVEYED — PLOTTED — ALIGNMENT CHECKED — RT. OF WAY CHECKED — CADD FILE NAME — BY — DATE

PROFILE — NOTE BOOK NO. — SURVEYED — PLOTTED — GRADES CHECKED — B.M. NOTED — STRUCTURE NOTATIONS CHKD — BY — DATE

MODEL: Default
FILE NAME: Z:\22057_12 IDOT D3 PTB 201-028 WO 12 IL 72 o' Owens\DGN\Design\Prelim\Plansheets\D366K63-sht-draft-01.dgn

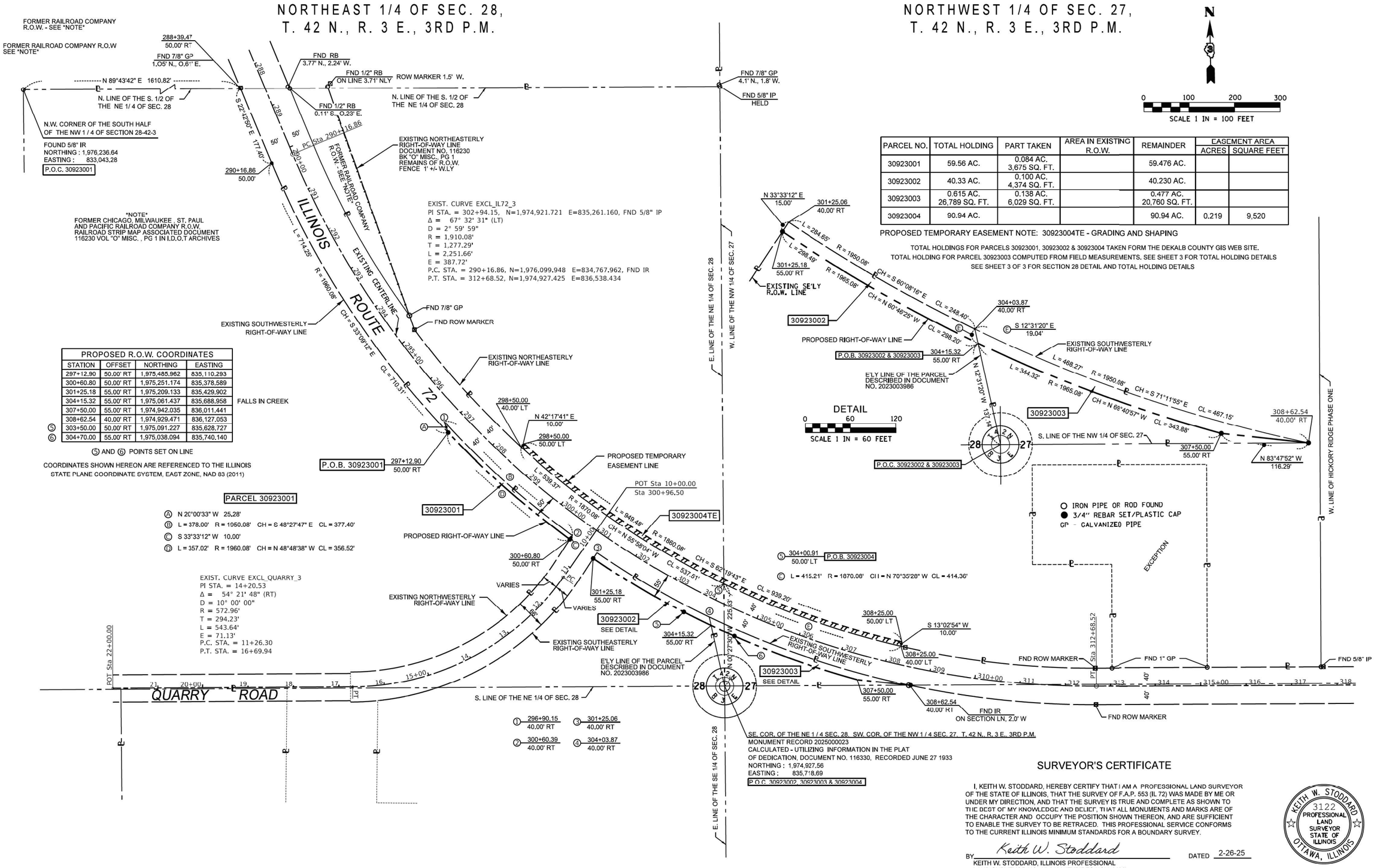

PROPOSED R.O.W. COORDINATES				
STATION	OFFSET	NORTHING	EASTING	
297+12.90	50.00' RT	1,975,485.962	835,110.293	
300+60.80	50.00' RT	1,975,251.174	835,378.589	
301+25.18	55.00' RT	1,975,209.133	835,429.902	
304+15.32	55.00' RT	1,975,061.437	835,688.958	FALLS IN CREEK
307+50.00	55.00' RT	1,974,942.035	836,011.441	
308+62.54	40.00' RT	1,974,929.471	836,127.053	
⑤ 303+50.00	50.00' RT	1,975,091.227	835,628.727	
⑥ 304+70.00	55.00' RT	1,975,038.094	835,740.140	

⑤ AND ⑥ POINTS SET ON LINE

COORDINATES SHOWN HEREON ARE REFERENCED TO THE ILLINOIS STATE PLANE COORDINATE SYSTEM, EAST ZONE, NAD 83 (2011)

PARCEL 30923001

Ⓐ N 2°00'33" W 25.28'
Ⓑ L = 378.00' R = 1050.08' CH = S 48°27'47" E CL = 377.40'
Ⓒ S 33°33'12" W 10.00'
Ⓓ L = 357.02' R = 1960.08' CH = N 48°48'38" W CL = 356.52'

PARCEL NO.	TOTAL HOLDING	PART TAKEN	AREA IN EXISTING R.O.W.	REMAINDER	EASEMENT AREA	
					ACRES	SQUARE FEET
30923001	59.56 AC.	0.084 AC. 3,675 SQ. FT.		59.476 AC.		
30923002	40.33 AC.	0.100 AC. 4,374 SQ. FT.		40.230 AC.		
30923003	0.615 AC. 26,789 SQ. FT.	0.138 AC. 6,029 SQ. FT.		0.477 AC. 20,760 SQ. FT.		
30923004	90.94 AC.			90.94 AC.	0.219	9,520

PROPOSED TEMPORARY EASEMENT NOTE: 30923004TE - GRADING AND SHAPING

TOTAL HOLDINGS FOR PARCELS 30923001, 30923002 & 30923004 TAKEN FORM THE DEKALB COUNTY GIS WEB SITE.
TOTAL HOLDING FOR PARCEL 30923003 COMPUTED FROM FIELD MEASUREMENTS. SEE SHEET 3 FOR TOTAL HOLDING DETAILS
SEE SHEET 3 OF 3 FOR SECTION 28 DETAIL AND TOTAL HOLDING DETAILS

SURVEYOR'S CERTIFICATE

I, KEITH W. STODDARD, HEREBY CERTIFY THAT I AM A PROFESSIONAL LAND SURVEYOR OF THE STATE OF ILLINOIS, THAT THE SURVEY OF F.A.P. 553 (IL 72) WAS MADE BY ME OR UNDER MY DIRECTION, AND THAT THE SURVEY IS TRUE AND COMPLETE AS SHOWN TO THE BEST OF MY KNOWLEDGE AND BELIEF, THAT ALL MONUMENTS AND MARKS ARE OF THE CHARACTER AND OCCUPY THE POSITION SHOWN THEREON, AND ARE SUFFICIENT TO ENABLE THE SURVEY TO BE RETRACED. THIS PROFESSIONAL SERVICE CONFORMS TO THE CURRENT ILLINOIS MINIMUM STANDARDS FOR A BOUNDARY SURVEY.

BY Keith W. Stoddard DATED 2-26-25

KEITH W. STODDARD, ILLINOIS PROFESSIONAL LAND SURVEYOR NO. 35-3122 (EXPIRES NOV. 2026)

KEITH W. STODDARD 3122 PROFESSIONAL LAND SURVEYOR STATE OF ILLINOIS OTTAWA, ILLINOIS

USER NAME =	DESIGNED -	REVISED -	
	DRAWN - KWS	REVISED -	
PLOT SCALE = 1" = 100'	CHECKED - BAS	REVISED -	
PLOT DATE = 4/23/2024	DATE - 4-25-2024	REVISED -	

STATE OF ILLINOIS
DEPARTMENT OF TRANSPORTATION

PLAT OF HIGHWAYS

SCALE: 1"=100' | SHEET 2 OF 3 SHEETS | STA. 296+90.15 TO STA. 308+62.54

F.A.P RTE.	SECTION	COUNTY	TOTAL SHEETS	SHEET NO.
553	(125BR)ES	DEKALB	96	37
ILLINOIS 72		CONTRACT NO. 66K63		
R-93-009-23	ILLINOIS	FED. AID PROJECT		

D:\66K63 PDH-Parcels.dgn 2/26/2025 1:29:18 PM User:keith.stoddard

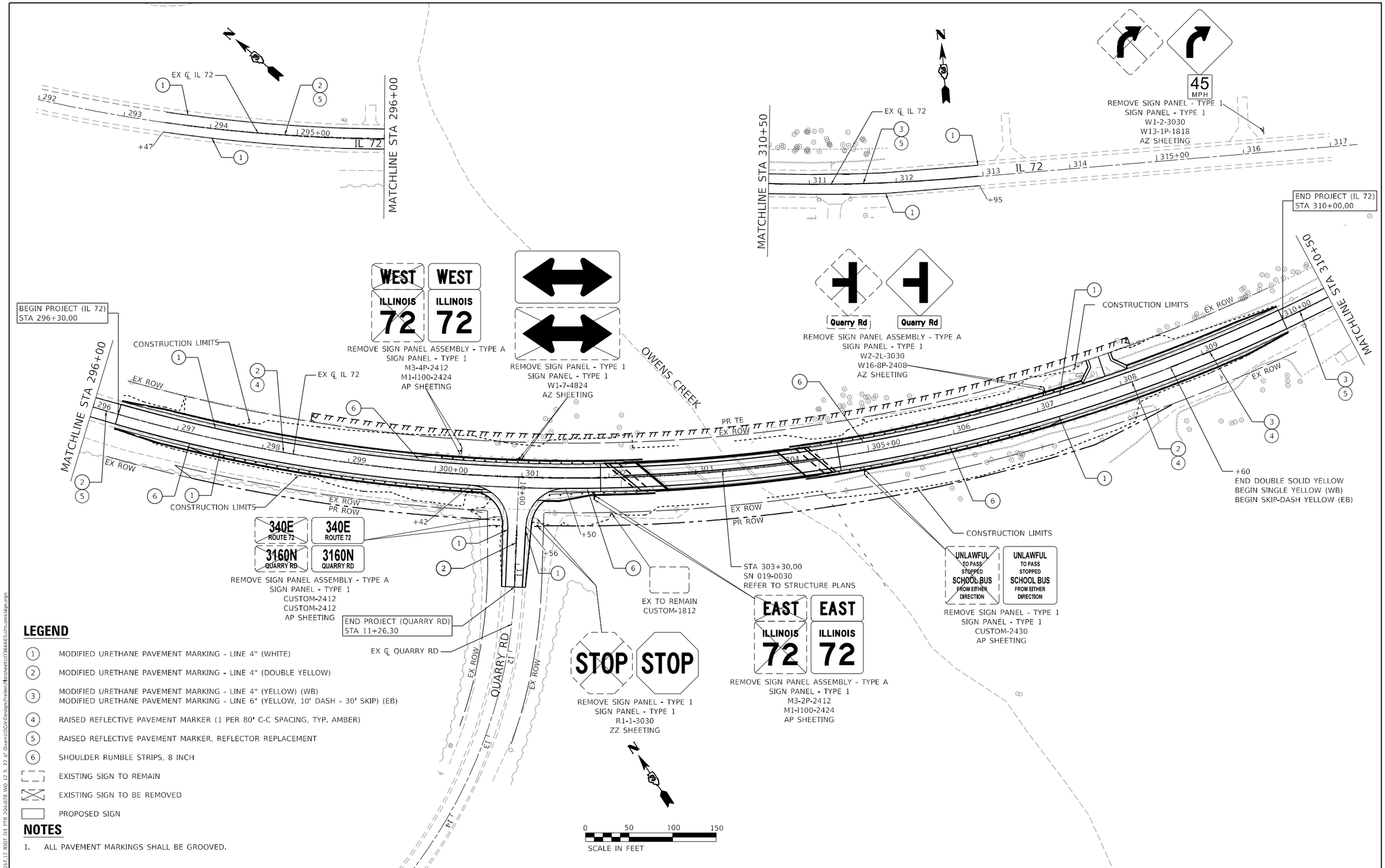

LEGEND

1. MODIFIED URETHANE PAVEMENT MARKING - LINE 4" (WHITE)
2. MODIFIED URETHANE PAVEMENT MARKING - LINE 4" (DOUBLE YELLOW)
3. MODIFIED URETHANE PAVEMENT MARKING - LINE 4" (YELLOW) (WB)
   MODIFIED URETHANE PAVEMENT MARKING - LINE 6" (YELLOW, 10' DASH - 30' SKIP) (EB)
4. RAISED REFLECTIVE PAVEMENT MARKER (1 PER 80' C-C SPACING, TYP. AMBER)
5. RAISED REFLECTIVE PAVEMENT MARKER, REFLECTOR REPLACEMENT
6. SHOULDER RUMBLE STRIPS, 8 INCH

EXISTING SIGN TO REMAIN

EXISTING SIGN TO BE REMOVED

PROPOSED SIGN

NOTES

1. ALL PAVEMENT MARKINGS SHALL BE GROOVED.

MODEL: Default
FILE NAME: P:\22057_12 IDOT D3 PTB 204-028 WO 12 IL 72 o' Owens\DGN\Design\Prelim\Plansheets\D366K63-sht-pmksgn.dgn

EFK•Moen Civil Engineering Design	USER NAME = skierpiec	DESIGNED - SK	REVISED -	STATE OF ILLINOIS DEPARTMENT OF TRANSPORTATION	IL 72 OVER OWENS CREEK PAVEMENT MARKING AND SIGNING PLAN
		DRAWN - SK	REVISED -		
	PLOT SCALE = 100.0000 ' / in.	CHECKED - JH	REVISED -		
	PLOT DATE = 3/24/2025	DATE - 3/24/2025	REVISED -		SCALE: SHEET OF SHEETS STA. TO STA.

F.A.P. RTE.	SECTION	COUNTY	TOTAL SHEETS	SHEET NO.
553	(125BR)ES	DEKALB	96	38
		CONTRACT NO. 66K63		
	ILLINOIS	FED. AID PROJECT		

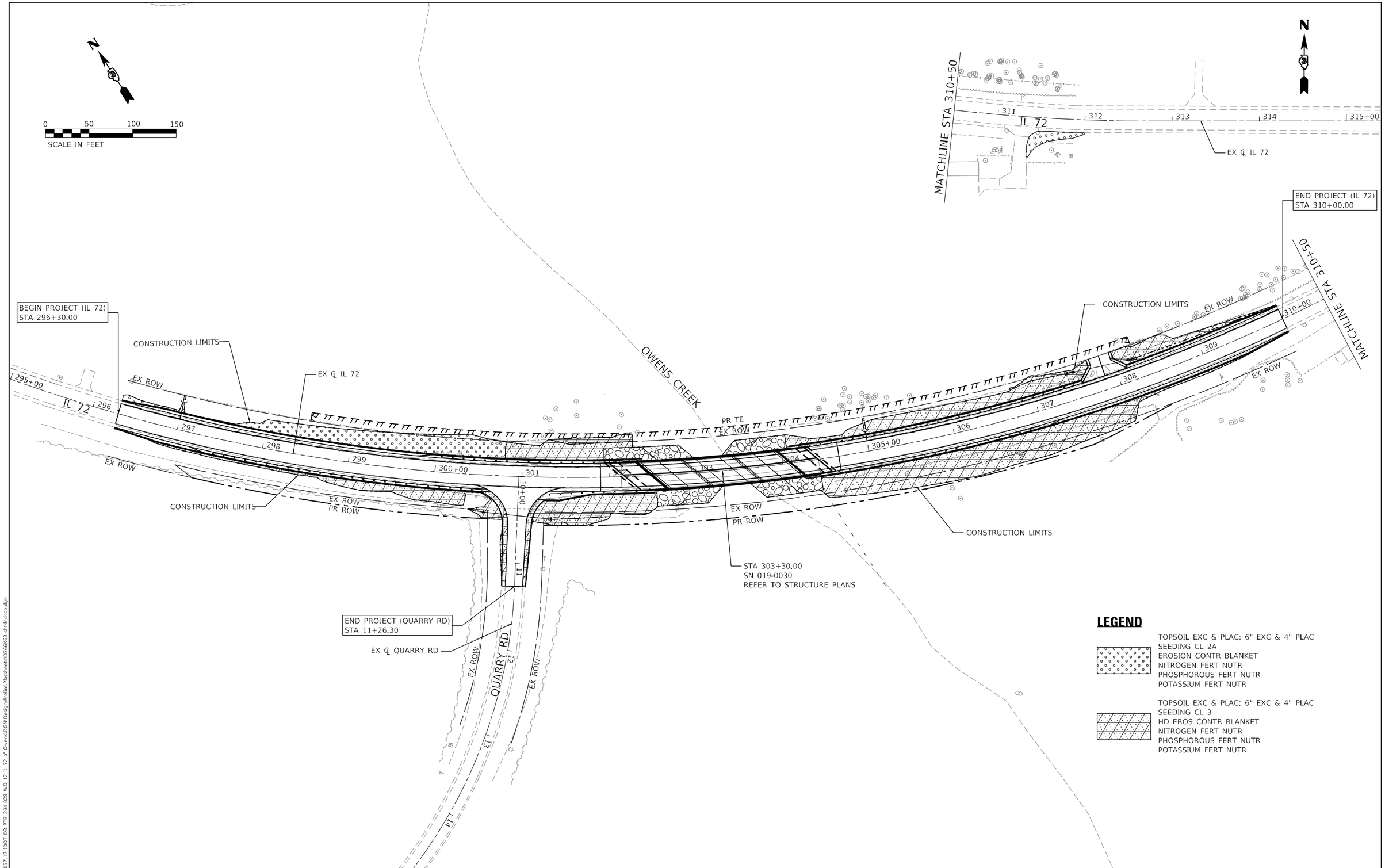

LEGEND

TOPSOIL EXC & PLAC; 6" EXC & 4" PLAC
SEEDING CL 2A
EROSION CONTR BLANKET
NITROGEN FERT NUTR
PHOSPHOROUS FERT NUTR
POTASSIUM FERT NUTR

TOPSOIL EXC & PLAC; 6" EXC & 4" PLAC
SEEDING CL 3
HD EROS CONTR BLANKET
NITROGEN FERT NUTR
PHOSPHOROUS FERT NUTR
POTASSIUM FERT NUTR

MODEL: Default
FILE NAME: P:\22037-12 IDOT D3 PTB 204-028 WO 12 IL 72 o' Owens\DGN\Design\Preliminary\sheets\0366K63-sht-ldscp.dgn

EFK•Moen
Civil Engineering Design

USER NAME = skierpiec	DESIGNED - SK	REVISED -
	DRAWN - SK	REVISED -
PLOT SCALE = 100.0000 ' / in.	CHECKED - JH	REVISED -
PLOT DATE = 3/24/2025	DATE - 3/24/2025	REVISED -

STATE OF ILLINOIS
DEPARTMENT OF TRANSPORTATION

IL 72 OVER OWENS CREEK
LANDSCAPING PLAN

SCALE: SHEET OF SHEETS STA. TO STA.

F.A.P. RTE.	SECTION	COUNTY	TOTAL SHEETS	SHEET NO.
553	(125BR)ES	DEKALB	96	39

CONTRACT NO. 66K63

ILLINOIS | FED. AID PROJECT

Benchmark: BM 1 - Chiseled square on top of northwest wingwall, Sta. 302+31.68, 17.52' Lt., Elev. 769.08.

Existing Structure: S.N. 019-0030 was originally built in 1982, replacing a structure built in 1930, as F.A. Route 553, Section 125 BR. The back to back abutment length is 164'-0" along the centerline of roadway and the out to out deck width is 35'-2". The existing structure consists of a curved three span continuous non-composite steel wide flange beam superstructure supported by pile stub abutments and concrete pile bent piers founded on steel H piles. Superstructure is to be removed and replaced while utilizing the substructure and allowing modification to the existing piers for addition of a beam line.

Traffic Control: One lane of traffic will be maintained by utilizing staged construction.

Salvage: None.

STA. 303+30.00
RE-BUILT 20__ BY
STATE OF ILLINOIS
F.A.P. RT. 553
Sec. (125BR)ES
LOADING HL-93
STR. NO. 019-0030

NAME PLATE

See Std. 515001 (9)

LOADING HL-93

No allowance for future wearing surface. (7)

DESIGN SPECIFICATIONS

2020 AASHTO LRFD Bridge Design Specifications (9th Edition)
2006 Seismic Retrofitting Manual for Highway Structures: Part 1 - Bridges (FHWA HRT-06-032)

SEISMIC DATA

Seismic Retrofit Category (SRC) = A
Design Spectral Acceleration at 1.0 sec (SD1) = 0.084g
Design Spectral Acceleration at 0.2 sec (SDS) = 0.144g
Soil Site Class = D
Performance Level = PL 1

DESIGN STRESSES

FIELD UNITS (New Construction)
f'c = 4,000 psi (Superstructure)
f'c = 3,500 psi (Substructure)
fy = 60,000 psi (Reinforcement)
fy = 50,000 psi (M270 Grade 50)

FIELD UNITS (Exist. Construction)
f'c = 3,500 psi (Substructure)
fy = 60,000 psi (Reinforcement)

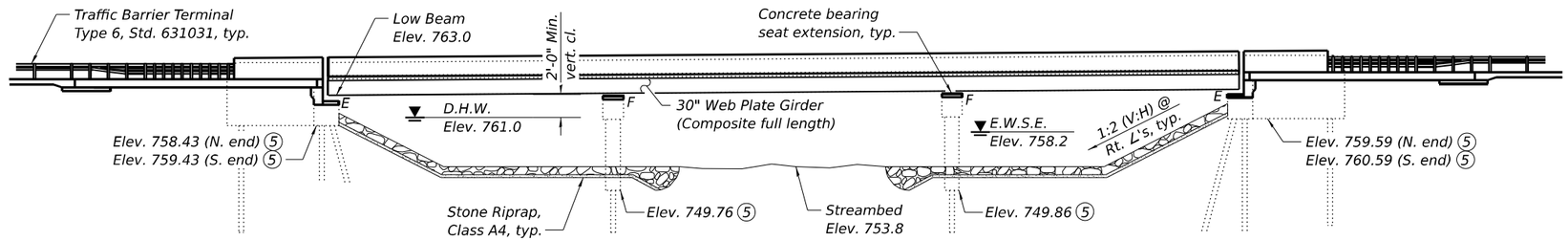

ELEVATION

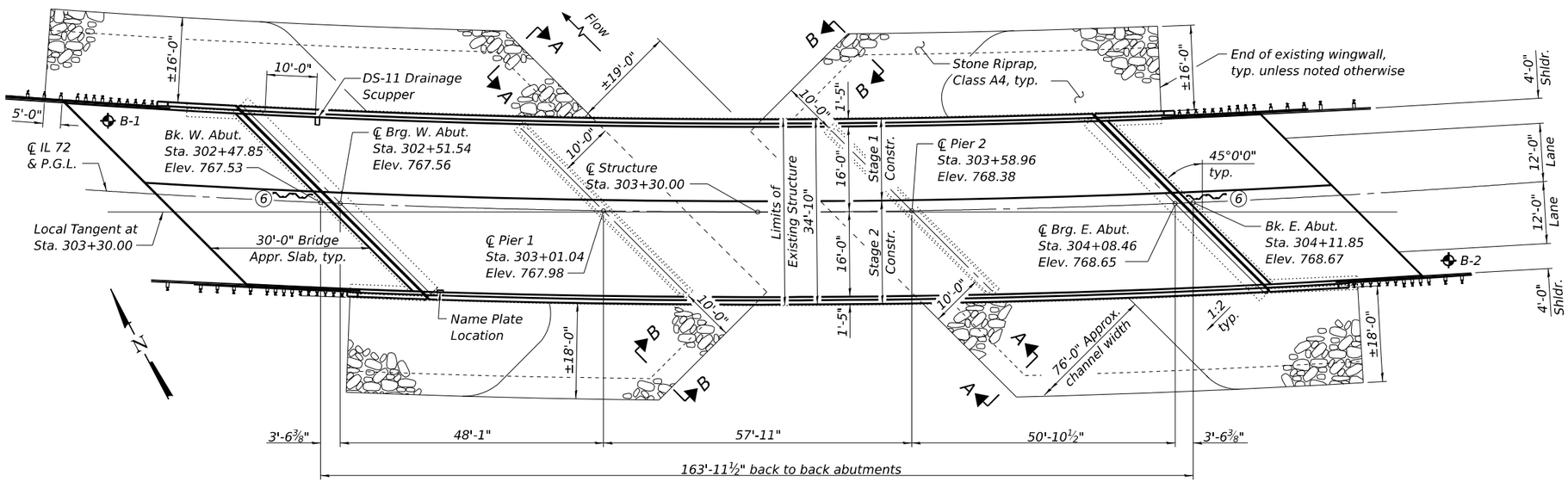

PLAN

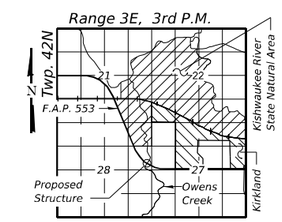

LOCATION SKETCH

DESIGN SCOUR ELEVATION TABLE

Event / Limit State	Design Scour Elevations (ft.) W. Abut.	Pier 1	Pier 2	E. Abut.	Item 113
Q100	758.43	746.1	746.1	759.59	5
Q200	758.43	745.2	745.2	759.59	
Design	758.43	746.9	746.9	759.59	

WATERWAY INFORMATION

Drainage Area = 45.2 sq. mi. Low Grade Elev. 766.46 @ Sta. 301+00

Flood	Freq. Yr.	Q C.F.S.	Opening Ft² Exist.	Opening Ft² Prop.	Nat. H.W.E.	Head - Ft. Exist.	Head - Ft. Prop.	Headwater El. Exist.	Headwater El. Prop.
Ten-Year	10	1,640	450	450	760.2	0.4	0.4	760.7	760.7
Design	50	2,400	529	529	761.0	0.6	0.6	761.7	761.7
Base	100	2,710	555	555	761.3	0.7	0.7	762.0	762.0
Scour Check	200	3,063	583	583	761.6	0.8	0.8	762.4	762.4
Max. Calc.	500	3,450	611	611	761.9	0.9	0.9	762.8	762.8

Existing and Proposed 10 Year Average Velocity = 3.5 ft/s

Notes:
(1) 1930 substructure not shown.
(2) All structural steel shall be galvanized.
(3) All transverse dimensions are radial unless noted otherwise.
(4) All longitudinal dimensions are measured along the local tangent unless noted otherwise.
(5) Elevations, stationing, and dimensions based on existing plans.
(6) Temporary Sheet Piling
(7) Based on existing substructure capacity after design scour.
(8) For Section A-A and Section B-B, see sheet 2 of 42.
(9) Existing Name Plate shall be cleaned and relocated next to new Name Plate. Cost included with Name Plates.

APPROVED
For Structural Adequacy Only
Engineer of Bridges & Structures

LICENSED STRUCTURAL ENGINEER
DANIEL GEORGE LUTZ
081006772
STATE OF ILLINOIS

DATE: 1/8/2025
EXPIRATION: 11/30/2026

GENERAL PLAN & ELEVATION
IL RTE. 72 OVER OWENS CREEK
F.A.P. RTE. 553 - SEC. (125BR)ES
DEKALB COUNTY
STA. 303+30.00
STRUCTURE NO. 019-0030

OATES ASSOCIATES
www.oatesassociates.com
ILLINOIS DESIGN FIRM LICENSE NO.: 184.001115

USER NAME =	DESIGNED - BAW	REVISED -	
	CHECKED - ETH	REVISED -	
PLOT SCALE =	DRAWN - BAW	REVISED -	
PLOT DATE = 4/10/2025	CHECKED - ETH	REVISED -	

STATE OF ILLINOIS
DEPARTMENT OF TRANSPORTATION

GENERAL PLAN & ELEVATION
STRUCTURE NO. 019-0030

SHEET 1 OF 42 SHEETS

F.A.P. RTE.	SECTION	COUNTY	TOTAL SHEETS	SHEET NO.
553	(125BR)ES	DEKALB	96	40

CONTRACT NO. 66K63
ILLINOIS | FED. AID PROJECT

FILE NAME: H:\P022101 - D3 V-I\WO 12 - IL 72 over Owens Creek\Bridge\Microstation\0190030-66K63-001-General Plan & Elevation.dgn

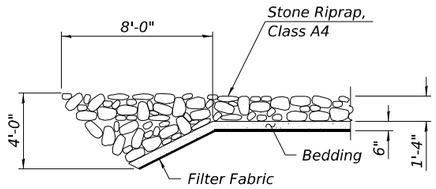

SECTION A-A

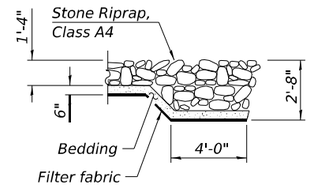

SECTION B-B

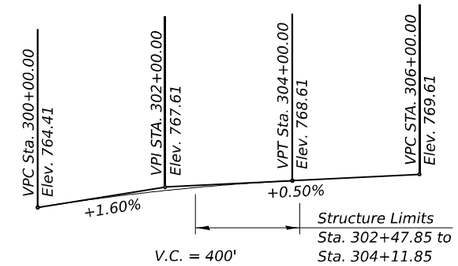

PROFILE GRADE

(Along ℄ IL 72)

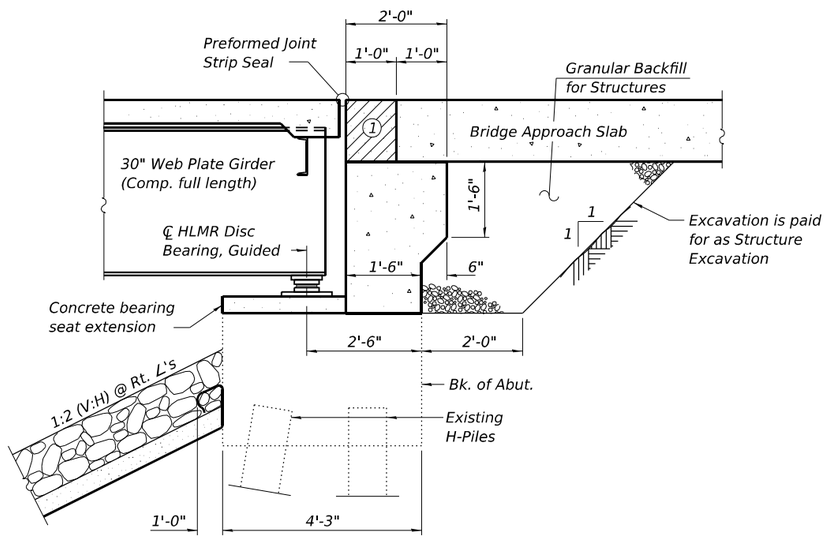

SECTION THRU PILE SUPPORTED
STUB ABUTMENT

(Horiz. dim. at Rt. ∠'s)

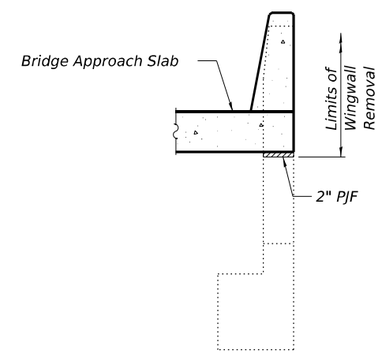

SECTION THRU
WINGWALL & BARRIER

SCOPE OF WORK

1. Remove and replace existing concrete deck, steel beams, bearings and expansion joints. New steel girders composite full length.
2. Replace abutment backwall.
3. Modify abutment and pier caps as required for new bearings.
4. Remove and replace approach slab and parapet on wingwall.
5. Minor substructure repair as needed including epoxy crack injection and structural repair of concrete (depth equal to or less than 5 inches).
6. Replace existing riprap and extend limits to protect piers.

EXIST. CURVE - IL 72

P.I. Sta. = 302+94.15
Δ = 67° 32' 31" (LT)
D = 02° 59' 59"
R = 1,910.08'
T = 1,277.29'
L = 2,251.66'
E = 387.72'
S.E. Run = 0.066 ft/ft
P.C. Sta. = 290+16.86
P.T. Sta. = 312+68.52

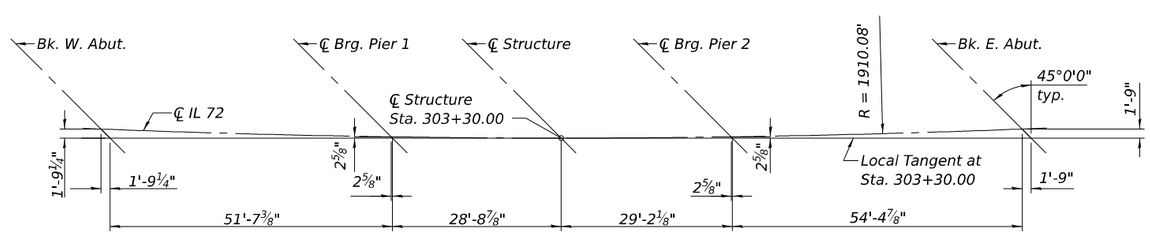

OFFSET SKETCH - IL 72

Notes:
1. Hatch block to be poured after superstructure and approach slab have been poured.

FILE NAME: H:\P022101 - D3 V-VWO 12 - IL 72 over Owens Creek\Bridge\Microstation\0190030-66K63-002-General Data.dgn

OATES ASSOCIATES www.oatesassociates.com ILLINOIS DESIGN FIRM LICENSE NO.: 184.001115	USER NAME =	DESIGNED - BAW	REVISED -	STATE OF ILLINOIS DEPARTMENT OF TRANSPORTATION	GENERAL DATA STRUCTURE NO. 019-0030	F.A.P. RTE.	SECTION	COUNTY	TOTAL SHEETS / SHEET NO.
		CHECKED - ETH	REVISED -			553	(125BR)ES	DEKALB	96 / 41
	PLOT SCALE =	DRAWN - BAW	REVISED -					CONTRACT NO. 66K63	
	PLOT DATE = 4/10/2025	CHECKED - ETH	REVISED -		SHEET 2 OF 42 SHEETS			ILLINOIS	FED. AID PROJECT

GENERAL NOTES

Fasteners shall be ASTM F 3125 Grade A325 Type 1. Fasteners shall be hot dip galvanized. See Special Provision for "Hot Dip Galvanizing for Structural Steel." Bolts 7/8 in. diameter, holes 15/16 in. diameter, unless otherwise noted.

Calculated weight of Structural Steel = 150,300 pounds

All structural steel shall be AASHTO M270 Grade 50 and shall be galvanized. See Special Provision for "Hot Dip Galvanizing for Structural Steel".

No field welding is permitted except as specified in the contract documents.

Reinforcement bars designated (E) shall be epoxy coated.

The concrete for bridge decks finished according to Article 503.16(a) of the Standard Specifications shall be placed and compacted parallel to the skew in uniform increments along centerline of bridge. The machine used for finishing shall be set parallel to the skew for striking off and screeding the concrete.

Bearing seat surfaces shall be constructed or adjusted to the designated elevations within a tolerance of 1/8 in. (0.01 ft.). Adjustment shall be made either by grinding the surface or by shimming the bearings.

A film forming Concrete Sealer shall be applied to the designated areas of the abutments.

Layout of the slope protection system may be varied to suit ground conditions in the field as directed by the Engineer.

Plan dimensions and details relative to the existing structure have been taken from existing plans are subject to nominal construction variations. The Contactor shall field verify existing dimensions and details affecting new construction and make necessary approved adjustments prior to construction or ordering of materials. Such variations shall not be cause for additional compensation for a change in scope of the work, however, the Contractor will be paid for the quantity actually furnished at the unit price bid for the work.

The existing structural steel coating and masonry plates contain lead. The Contractor shall take appropriate precautions to address the presence of lead on this project.

Existing riprap to be removed and replaced. Cost of this and any additional excavation required to place proposed riprap to be included in Stone Riprap, Class A4. Excavated material shall be used to fill in scour hole on the south end of Pier 1 as directed by the Engineer.

INDEX OF SHEETS

TOTAL BILL OF MATERIAL

ITEM	UNIT	SUPER	SUB	TOTAL
Stone Riprap, Class A4	Sq. Yd.	-	1,106	1,106
Filter Fabric	Sq. Yd.	-	1,106	1,106
Removal of Existing Superstructures	Each	1	-	1
Concrete Removal	Cu. Yd.	-	29.0	29.0
Structure Excavation	Cu. Yd.	-	40	40
Concrete Structures	Cu. Yd.	-	60.9	60.9
Concrete Superstructure	Cu. Yd.	205.9	-	205.9
Bridge Deck Grooving	Sq. Yd.	707	-	707
Protective Coat	Sq. Yd.	968	-	968
Concrete Superstructure (Approach Slab)	Cu. Yd.	98.9	-	98.9
Furnishing and Erecting Structural Steel	L. Sum	1	-	1
Stud Shear Connectors	Each	3,960	-	3,960
Reinforcement Bars, Epoxy Coated	Pound	85,260	10,080	95,340
Bar Splicers	Each	615	108	723
Name Plates	Each	1	-	1
Preformed Joint Strip Seal	Foot	95.0	-	95.0
Anchor Bolts, 3/4"	Each	96	-	96
Temporary Sheet Piling	Sq. Ft.	-	178	178
Granular Backfill for Structures	Cu. Yd.	-	40	40
Concrete Sealer	Sq. Ft.	-	1,122	1,122
Epoxy Crack Injection	Foot	-	21	21
Structural Repair of Concrete (Depth Equal To or Less Than 5 Inches)	Sq. Ft.	-	2	2
Drainage Scuppers, DS-11	Each	1	-	1
Bar Terminators	Each	54	-	54
High Load Multi-Rotational Bearings, Disc, Fixed-200K	Each	12	-	12
High Load Multi-Rotational Bearings, Disc, Guided Expansion-100K	Each	12	-	12

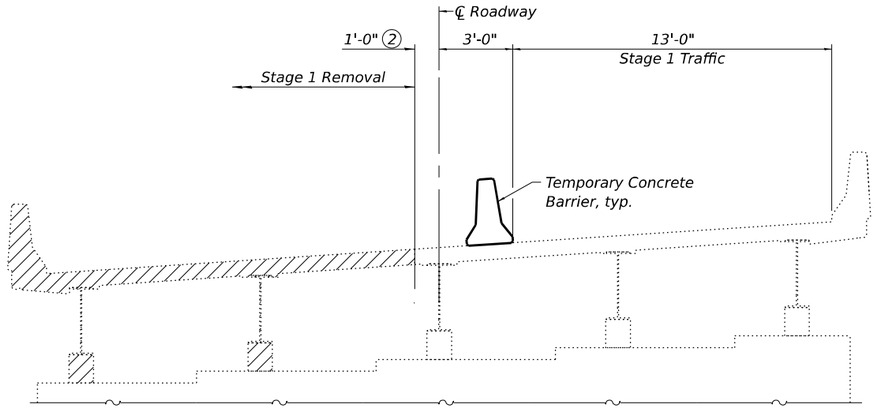

STAGE 1 REMOVAL
(Looking East)

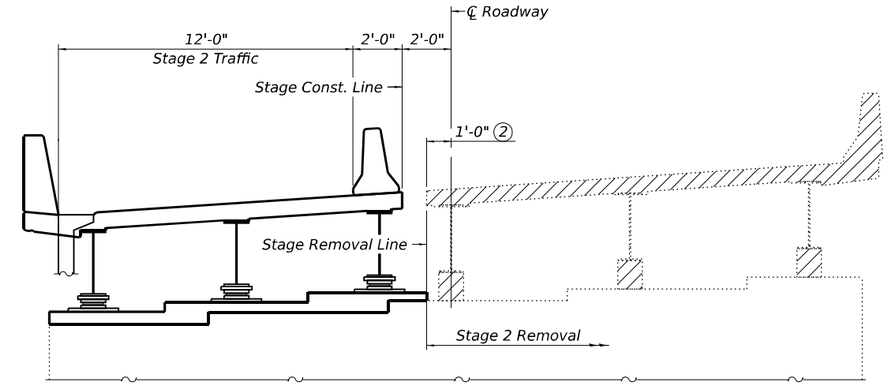

STAGE 2 REMOVAL
(Looking East)

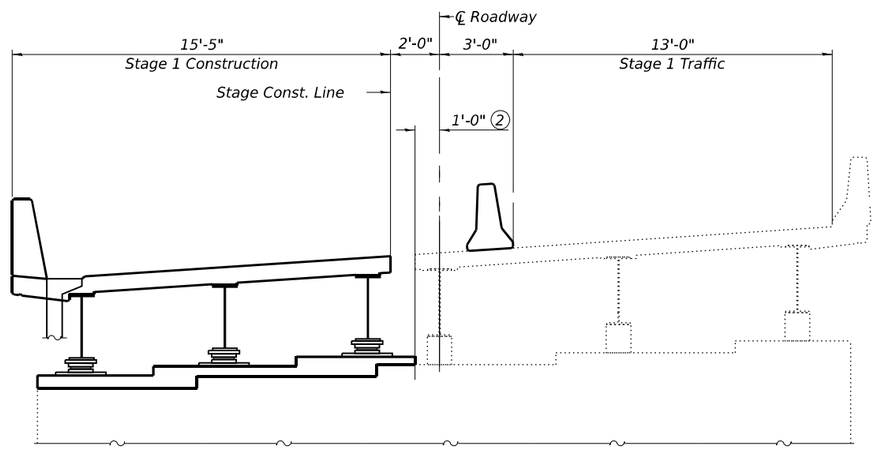

STAGE 1 CONSTRUCTION
(Looking East)

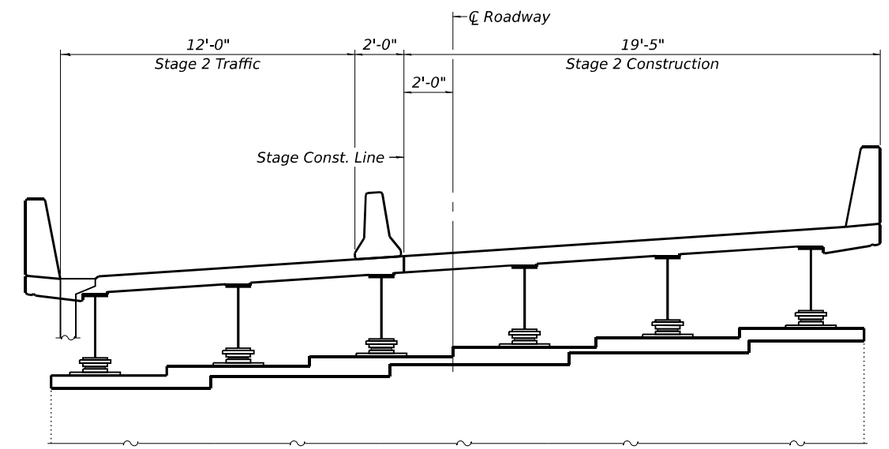

STAGE 2 CONSTRUCTION
(Looking East)

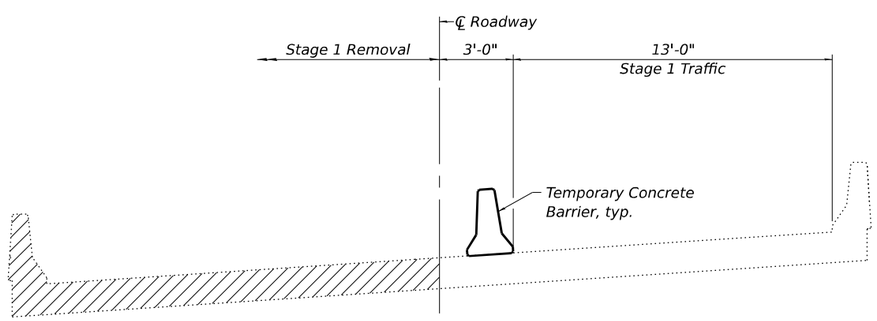

STAGE 1 APPROACH SLAB REMOVAL
(Looking East)

Notes:
1. All transverse dimensions are radial unless noted otherwise.
2. Stage Removal Line is at CL Roadway on approach slabs to accommodate Temporary Sheet Piling. See Stage 1 Approach Slab Removal.
3. Hatched area indicates Removal of Existing Superstructures.
4. For details of Temporary Concrete Barrier, see sheet 6 of 42. For quantity of Temporary Concrete Barrier and related traffic control, see roadway plans.
5. Stage Construction Line for bearing seats varies.

FILE NAME: H:\P\222101 - D3 V-V\WO 12 - IL 72 over Owens Creek\Bridge\Microstation\0190030-66K63-004-Stage Construction Details.dgn

OATES ASSOCIATES
www.oatesassociates.com
ILLINOIS DESIGN FIRM LICENSE NO.: 184.001115

USER NAME =	DESIGNED - BAW	REVISED -	
	CHECKED - ETH	REVISED -	
PLOT SCALE =	DRAWN - BAW	REVISED -	
PLOT DATE = 4/10/2025	CHECKED - ETH	REVISED -	

STATE OF ILLINOIS
DEPARTMENT OF TRANSPORTATION

STAGE CONSTRUCTION DETAILS
STRUCTURE NO. 019-0030

SHEET 4 OF 42 SHEETS

F.A.P. RTE.	SECTION	COUNTY	TOTAL SHEETS	SHEET NO.
553	(125BR)ES	DEKALB	96	43
		CONTRACT NO. 66K63		
	ILLINOIS	FED. AID PROJECT		

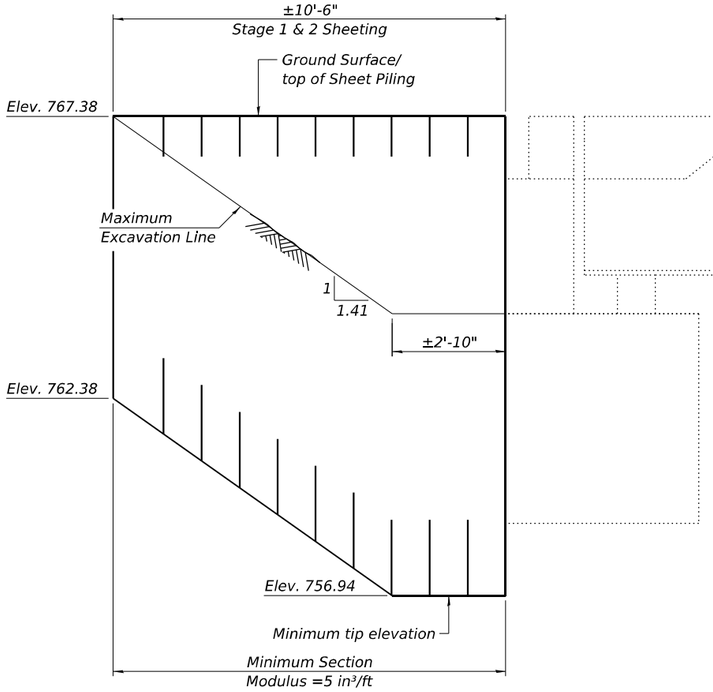

WEST ABUTMENT ①

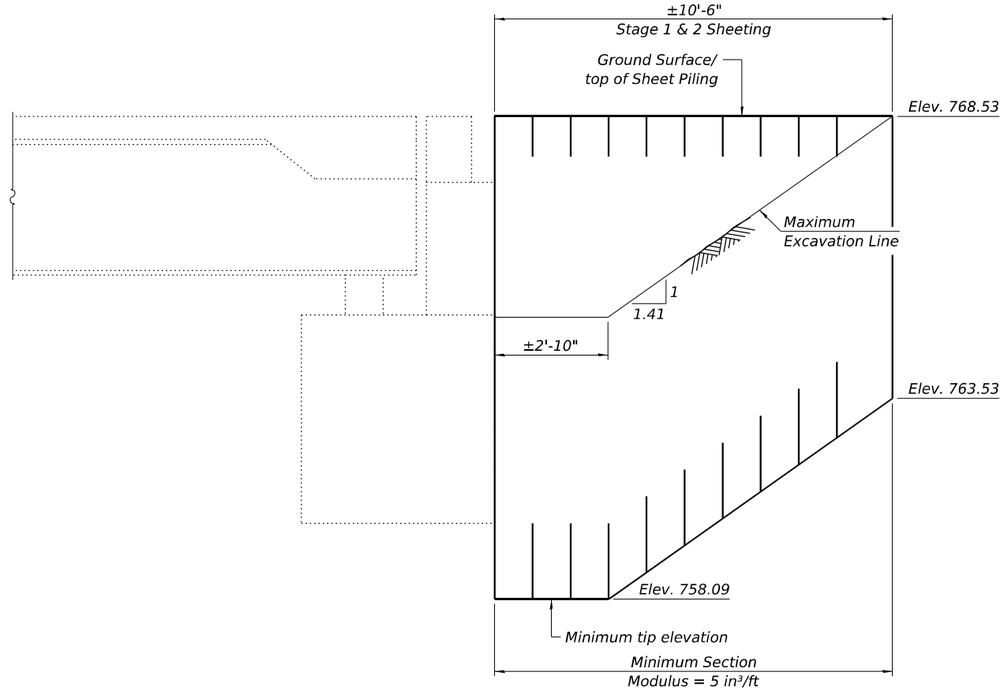

EAST ABUTMENT ①

Notes:

① If the Contractor chooses to alter the temporary cantilevered sheet piling design requirements shown, a design submittal including plan details and calculations will be required for review and acceptance by the Engineer.

FILE NAME: H:\P222101 - D3 V-V\WO 12 - IL 72 over Owens Creek\Bridge\Microstation\0190030-66K63-005-Stage Construction Details.dgn

OATES ASSOCIATES
www.oatesassociates.com
ILLINOIS DESIGN FIRM LICENSE NO.: 184.001115

USER NAME =	DESIGNED - KP	REVISED -	
	CHECKED - ETH	REVISED -	
PLOT SCALE =	DRAWN - KP	REVISED -	
PLOT DATE = 4/10/2025	CHECKED - ETH	REVISED -	

STATE OF ILLINOIS
DEPARTMENT OF TRANSPORTATION

STAGE CONSTRUCTION DETAILS
STRUCTURE NO. 019-0030

SHEET 5 OF 42 SHEETS

F.A.P. RTE.	SECTION	COUNTY	TOTAL SHEETS	SHEET NO.
553	(125BR)ES	DEKALB	96	44
		CONTRACT NO. 66K63		
	ILLINOIS	FED. AID PROJECT		

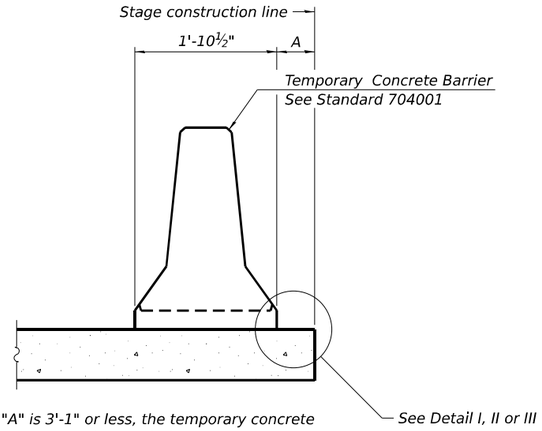

When "A" is 3'-1" or less, the temporary concrete barrier shall be restrained to the new slab according to Detail I, II or III. No restraint is required when "A" is greater than 3'-1".

NEW SLAB OR NEW DECK BEAM

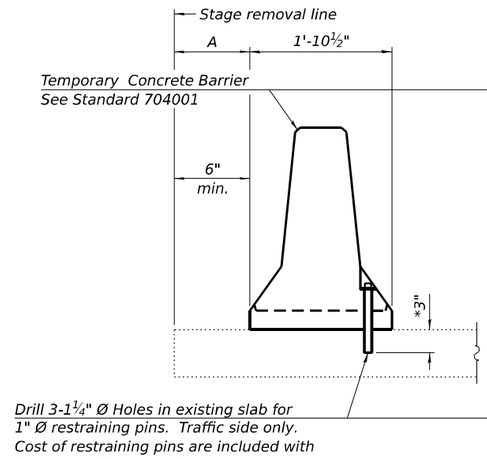

EXISTING SLAB

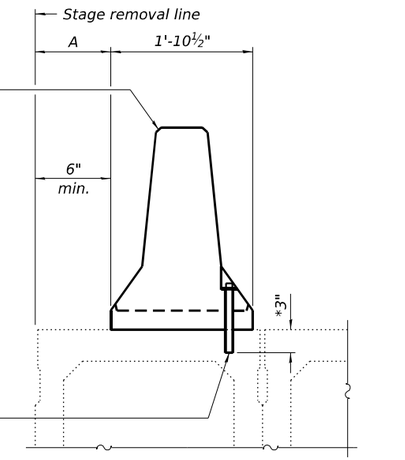

* When hot-mix asphalt wearing surface is present, embedment shall be 3" plus the wearing surface depth.

EXISTING DECK BEAM

SECTIONS THRU SLAB OR DECK BEAM

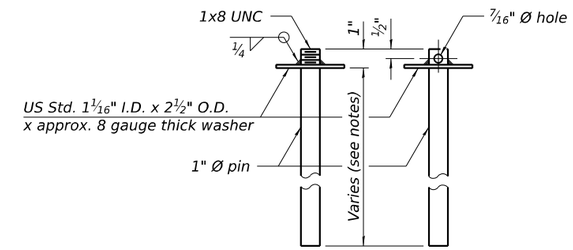

RESTRAINING PIN

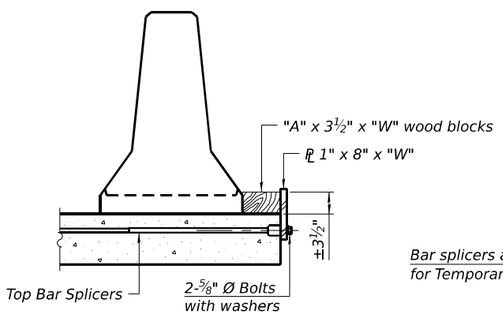

DETAIL I

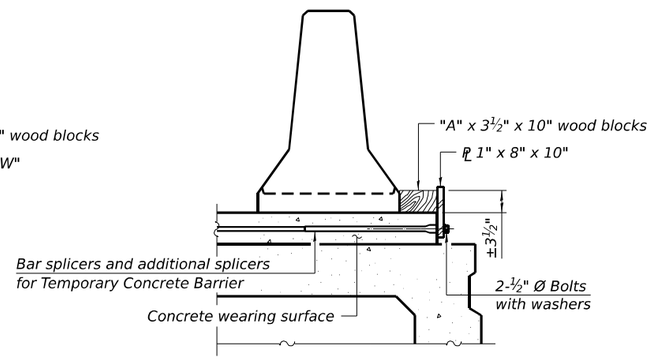

DETAIL II

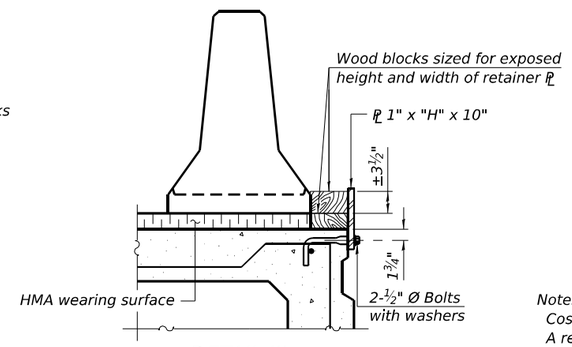

DETAIL III

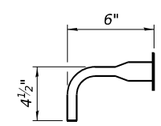

BAR SPLICER FOR #4 BAR - DETAIL III

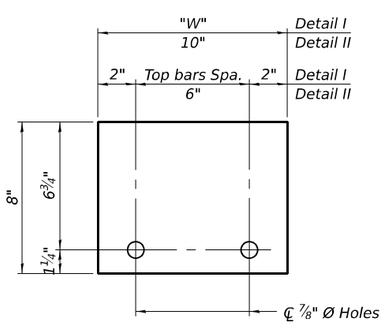

STEEL RETAINER PL 1" x 8" x "W"

(Detail I and II)

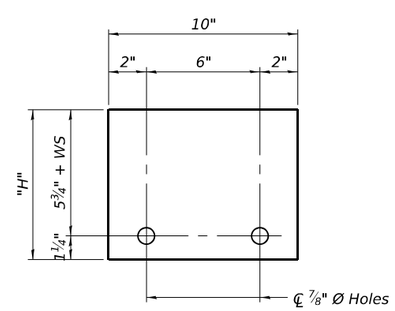

STEEL RETAINER PL 1" x "H" x 10"

(Detail III)

Notes:

Cost of retainer assembly is included with Temporary Concrete Barrier.

A retainer assembly shall be located at the approximate ℄ of each temporary concrete barrier.

The retainer plate shall not be removed until the concrete on the adjacent stage is ready to be poured. For Detail III applications the retainer plate shall not be removed until just prior to placing the adjacent beam.

When the 'A' dimension is less than 1½", the wood block shall be omitted and the barrier shall be placed in direct contact with the steel retainer plate. For deck beam applications the minimum required 'A' distance is 6" to accommodate the shear key clamping device.

Detail I - Installation for a new bridge deck or bridge slab.

Detail II - Installation for a new deck beam with an initial concrete wearing surface. Additional bar splicers shall be provided at 6'-0" centers and paired with the bar splicers of the concrete wearing surface reinforcement to accommodate the installation of the retainer assemblies. The cost of the additional bar splicers is included with the concrete wearing surface.

Detail III - Installation for a new deck beam with no initial wearing surface or with an initial hot-mix asphalt (HMA) wearing surface present. The deck beam directly beneath the temporary concrete barrier shall be fabricated with bar splicer inserts in the side of the beam, as detailed, to accommodate the installation of the retainer assemblies. A pair of bar splicers, 6" apart, shall be placed at 6'-0" centers along the length of the beam. The cost of the bar splicers is included with the deck beam.

RAILING CRITERIA

NCHRP 350 Test Level	3
Railing Weight (plf)	440

R-27

5-15-2023

FILE NAME: H:\P022101 - D3 V-V\WO 12 - IL 72 over Owens Creek\Bridge\Microstation\0190030-66K63-006-Temporary Concrete Barrier for Stage Construction.dgn

OATES ASSOCIATES
www.oatesassociates.com
ILLINOIS DESIGN FIRM LICENSE NO.: 184.001115

USER NAME =	DESIGNED -	REVISED -	
	CHECKED -	REVISED -	
PLOT SCALE =	DRAWN -	REVISED -	
PLOT DATE = 4/10/2025	CHECKED -	REVISED -	

STATE OF ILLINOIS
DEPARTMENT OF TRANSPORTATION

TEMPORARY CONCRETE BARRIER
STRUCTURE NO. 019-0030

SHEET 6 OF 42 SHEETS

F.A.P. RTE.	SECTION	COUNTY	TOTAL SHEETS	SHEET NO.
553	(125BR)ES	DEKALB	96	45
		CONTRACT NO. 66K63		
		ILLINOIS	FED. AID PROJECT	

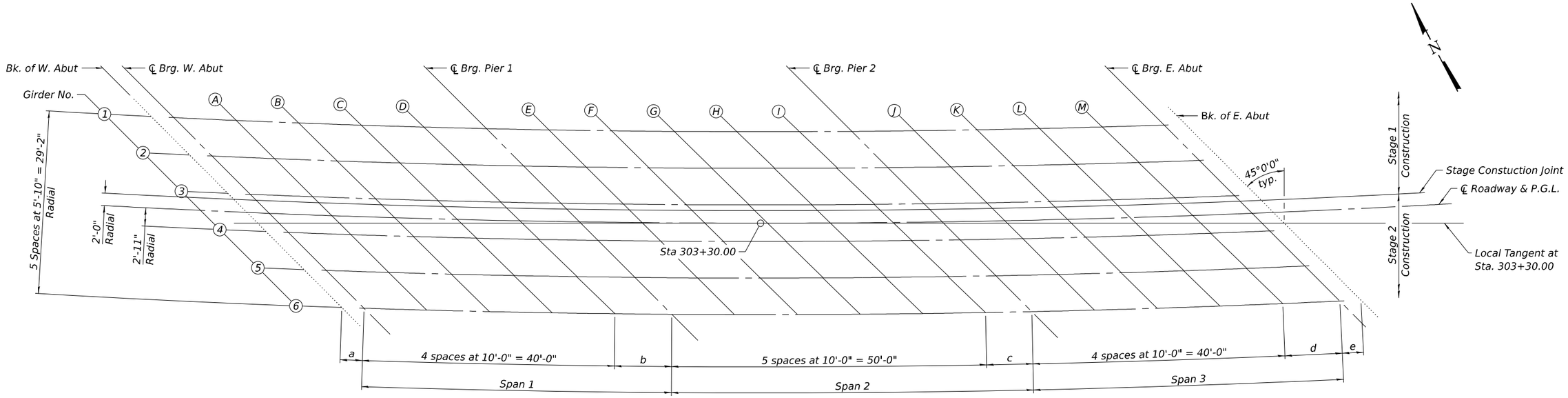

PLAN

DIMENSION TABLE ①

Girder	Radius	Span 1	Span 2	Span 3	a	b	c	d	e	f	g	h
1	1,895.50'	49'-11 3/16"	58'-4 7/16"	49'-10 1/8"	3'-8 3/4"	9'-11 3/16"	8'-4 7/16"	9'-10 1/8"	3'-5"	12'-5 13/16"	14'-7 1/8"	12'-5 9/16"
2	1,901.33'	49'-9 1/16"	58'-2 1/4"	49'-8 7/16"	3'-8 9/16"	9'-9 1/16"	8'-2 1/4"	9'-8 7/16"	3'-4 15/16"	12'-5 1/4"	14'-6 9/16"	12'-5 1/8"
3	1,907.16'	49'-7"	58'-0 1/16"	49'-6 13/16"	3'-8 7/16"	9'-7"	8'-0 1/16"	9'-6 13/16"	3'-4 13/16"	12'-4 3/4"	14'-6"	12'-4 11/16"
Stage Const. Jt.	1,908.08'	49'-6 11/16"	57'-11 3/4"	49'-6 9/16"	3'-8 3/8"	9'-6 11/16"	7'-11 3/4"	9'-6 9/16"	3'-4 13/16"	12'-4 11/16"	14'-5 15/16"	12'-4 5/8"
℄ Rdwy.	1,910.08'	49'-6"	57'-11"	49'-6"	3'-8 5/16"	9'-6"	7'-11"	9'-6"	3'-4 3/4"	12'-4 1/2"	14'-5 3/4"	12'-4 1/2"
4	1,913.00'	49'-5"	57'-9 15/16"	49'-5 3/16"	3'-8 1/4"	9'-5"	7'-9 15/16"	9'-5 3/16"	3'-4 11/16"	12'-4 1/4"	14'-5 1/2"	12'-4 5/16"
5	1,918.83'	49'-3"	57'-7 7/8"	49'-3 5/8"	3'-8 1/16"	9'-3"	7'-7 7/8"	9'-3 5/8"	3'-4 5/8"	12'-3 3/4"	14'-4 15/16"	12'-3 7/8"
6	1,924.66'	49'-1 1/16"	57'-5 13/16"	49'-2 1/16"	3'-7 15/16"	9'-1 1/16"	7'-5 13/16"	9'-2 1/16"	3'-4 1/2"	12'-3 1/4"	14'-4 7/16"	12'-3 1/2"

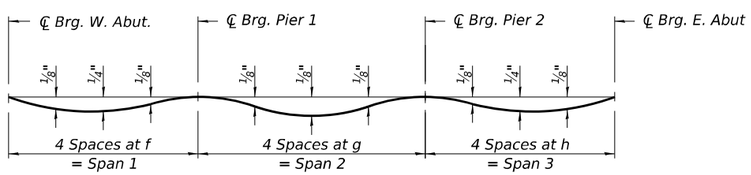

DEAD LOAD DEFLECTION DIAGRAM ②

(Includes weight of concrete only.)

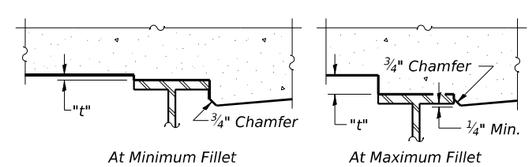

FILLET HEIGHTS ③

Notes:

① Horizontal dimensions are taken along centerline of each individual girder.

② The Girder Dead Load Deflections are not to be used in the field if the engineer is working from the grade elevations adjusted for dead load deflections as shown on sheets 8 thru 9 of 42.

③ To determine "t": After all structural steel has been erected, elevations of the top flanges of the girders shall be taken at intervals shown above. These elevations subtracted from the "Theoretical Grade Elevations Adjusted for Dead Load Deflection" shown on sheets 8 thru 9 of 42, minus slab thickness, equals the fillet heights "t" above top flange of beams.

FILE NAME: H:\P222101 - D3 V-V\WO 12 - IL 72 over Owens Creek\Bridge\Microstation\0190030-66K63-007-Top of Slab Elevations.dgn

OATES ASSOCIATES
www.oatesassociates.com
ILLINOIS DESIGN FIRM LICENSE NO.: 184.001115

USER NAME =	DESIGNED - ETH	REVISED -	
	CHECKED - ORG	REVISED -	
PLOT SCALE =	DRAWN - ETH	REVISED -	
PLOT DATE = 4/10/2025	CHECKED - ORG	REVISED -	

STATE OF ILLINOIS
DEPARTMENT OF TRANSPORTATION

TOP OF SLAB ELEVATIONS
STRUCTURE NO. 019-0030

SHEET 7 OF 42 SHEETS

F.A.P. RTE.	SECTION	COUNTY	TOTAL SHEETS	SHEET NO.
553	(125BR)ES	DEKALB	96	46
		CONTRACT NO. 66K63		
		ILLINOIS	FED. AID PROJECT	

FACE OF NORTH PARAPET

Location	Station	Offset	Theoretical Grade Elevations	Theoretical Grade Elevations Adjusted For Dead Load Deflection
Bk. of W. Abut.	302+30.17	-16.00	766.31	766.31
℄ Brg. W. Abut.	302+33.94	-16.00	766.34	766.34
A	302+44.02	-16.00	766.44	766.46
B	302+54.10	-16.00	766.53	766.56
C	302+64.19	-16.00	766.62	766.64
D	302+74.27	-16.00	766.71	766.72
℄ Brg. Pier 1	302+84.33	-16.00	766.79	766.79
E	302+94.42	-16.00	766.87	766.88
F	303+04.50	-16.00	766.95	766.97
G	303+14.59	-16.00	767.03	767.05
H	303+24.67	-16.00	767.10	767.11
I	303+34.76	-16.00	767.17	767.18
℄ Brg. Pier 2	303+43.24	-16.00	767.23	767.23
J	303+53.33	-16.00	767.29	767.30
K	303+63.41	-16.00	767.35	767.37
L	303+73.50	-16.00	767.41	767.44
M	303+83.58	-16.00	767.47	767.49
℄ Brg. E. Abut.	303+93.54	-16.00	767.52	767.52
Bk. of E. Abut.	303+96.99	-16.00	767.54	767.54

GIRDER 1

Location	Station	Offset	Theoretical Grade Elevations	Theoretical Grade Elevations Adjusted For Dead Load Deflection
Bk. of W. Abut.	302+31.76	-14.58	766.42	766.42
℄ Brg. W. Abut.	302+35.51	-14.58	766.45	766.45
A	302+45.59	-14.58	766.55	766.56
B	302+55.67	-14.58	766.64	766.66
C	302+65.74	-14.58	766.73	766.75
D	302+75.82	-14.58	766.81	766.82
℄ Brg. Pier 1	302+85.83	-14.58	766.90	766.90
E	302+95.91	-14.58	766.98	766.99
F	303+05.98	-14.58	767.06	767.07
G	303+16.06	-14.58	767.13	767.15
H	303+26.14	-14.58	767.20	767.22
I	303+36.22	-14.58	767.27	767.28
℄ Brg. Pier 2	303+44.65	-14.58	767.33	767.33
J	303+54.73	-14.58	767.39	767.41
K	303+64.80	-14.58	767.45	767.48
L	303+74.88	-14.58	767.51	767.54
M	303+84.96	-14.58	767.57	767.58
℄ Brg. E. Abut.	303+94.88	-14.58	767.62	767.62
Bk. of E. Abut.	303+98.32	-14.58	767.64	767.64

GIRDER 2

Location	Station	Offset	Theoretical Grade Elevations	Theoretical Grade Elevations Adjusted For Dead Load Deflection
Bk. of W. Abut.	302+38.24	-8.75	766.86	766.86
℄ Brg. W. Abut.	302+41.97	-8.75	766.90	766.90
A	302+52.02	-8.75	766.99	767.00
B	302+62.06	-8.75	767.08	767.10
C	302+72.11	-8.75	767.17	767.18
D	302+82.16	-8.75	767.25	767.26
℄ Brg. Pier 1	302+91.96	-8.75	767.33	767.33
E	303+02.00	-8.75	767.41	767.42
F	303+12.05	-8.75	767.49	767.50
G	303+22.10	-8.75	767.56	767.57
H	303+32.14	-8.75	767.63	767.64
I	303+42.19	-8.75	767.70	767.70
℄ Brg. Pier 2	303+50.41	-8.75	767.75	767.75
J	303+60.46	-8.75	767.81	767.82
K	303+70.50	-8.75	767.87	767.89
L	303+80.55	-8.75	767.93	767.95
M	303+90.60	-8.75	767.98	767.99
℄ Brg. E. Abut.	304+00.35	-8.75	768.03	768.03
Bk. of E. Abut.	304+03.77	-8.75	768.05	768.05

GIRDER 3

Location	Station	Offset	Theoretical Grade Elevations	Theoretical Grade Elevations Adjusted For Dead Load Deflection
Bk. of W. Abut.	302+44.66	-2.92	767.31	767.31
℄ Brg. W. Abut.	302+48.37	-2.92	767.34	767.34
A	302+58.38	-2.92	767.43	767.45
B	302+68.40	-2.92	767.52	767.54
C	302+78.41	-2.92	767.61	767.62
D	302+88.43	-2.92	767.69	767.69
℄ Brg. Pier 1	302+98.03	-2.92	767.76	767.76
E	303+08.04	-2.92	767.84	767.85
F	303+18.06	-2.92	767.92	767.93
G	303+28.07	-2.92	767.99	768.00
H	303+38.09	-2.92	768.06	768.06
I	303+48.10	-2.92	768.12	768.12
℄ Brg. Pier 2	303+56.12	-2.92	768.17	768.17
J	303+66.14	-2.92	768.23	768.24
K	303+76.15	-2.92	768.29	768.31
L	303+86.17	-2.92	768.35	768.36
M	303+96.18	-2.92	768.40	768.41
℄ Brg. E. Abut.	304+05.77	-2.92	768.45	768.45
Bk. of E. Abut.	304+09.17	-2.92	768.46	768.46

STAGE CONSTRUCTION JOINT

Location	Station	Offset	Theoretical Grade Elevations	Theoretical Grade Elevations Adjusted For Dead Load Deflection
Bk. of W. Abut.	302+45.66	-2.00	767.38	767.38
℄ Brg. W. Abut.	302+49.37	-2.00	767.41	767.41
A	302+59.38	-2.00	767.50	767.52
B	302+69.39	-2.00	767.59	767.61
C	302+79.40	-2.00	767.68	767.69
D	302+89.41	-2.00	767.76	767.76
℄ Brg. Pier 1	302+98.98	-2.00	767.83	767.83
E	303+08.99	-2.00	767.91	767.91
F	303+19.00	-2.00	767.98	767.99
G	303+29.01	-2.00	768.05	768.06
H	303+39.02	-2.00	768.12	768.13
I	303+49.03	-2.00	768.19	768.19
℄ Brg. Pier 2	303+57.02	-2.00	768.24	768.24
J	303+67.03	-2.00	768.30	768.31
K	303+77.04	-2.00	768.36	768.37
L	303+87.05	-2.00	768.41	768.43
M	303+97.06	-2.00	768.46	768.47
℄ Brg. E. Abut.	304+06.61	-2.00	768.51	768.51
Bk. of E. Abut.	304+10.02	-2.00	768.53	768.53

℄ ROADWAY & P.G.L.

Location	Station	Offset	Theoretical Grade Elevations	Theoretical Grade Elevations Adjusted For Dead Load Deflection
Bk. of W. Abut.	302+47.85	0.00	767.53	767.53
℄ Brg. W. Abut.	302+51.54	0.00	767.56	767.56
A	302+61.54	0.00	767.65	767.67
B	302+71.54	0.00	767.74	767.76
C	302+81.54	0.00	767.82	767.84
D	302+91.54	0.00	767.91	767.91
℄ Brg. Pier 1	303+01.04	0.00	767.98	767.98
E	303+11.04	0.00	768.06	768.06
F	303+21.04	0.00	768.13	768.14
G	303+31.04	0.00	768.20	768.21
H	303+41.04	0.00	768.27	768.27
I	303+51.04	0.00	768.33	768.33
℄ Brg. Pier 2	303+58.96	0.00	768.38	768.38
J	303+68.96	0.00	768.44	768.45
K	303+78.96	0.00	768.50	768.51
L	303+88.96	0.00	768.55	768.57
M	303+98.96	0.00	768.60	768.62
℄ Brg. E. Abut.	304+08.46	0.00	768.65	768.65
Bk. of E. Abut.	304+11.85	0.00	768.67	768.67

GIRDER 4

Location	Station	Offset	Theoretical Grade Elevations	Theoretical Grade Elevations Adjusted For Dead Load Deflection
Bk. of W. Abut.	302+51.02	2.92	767.75	767.75
℄ Brg. W. Abut.	302+54.70	2.92	767.79	767.79
A	302+64.69	2.92	767.87	767.89
B	302+74.67	2.92	767.96	767.98
C	302+84.66	2.92	768.04	768.06
D	302+94.64	2.92	768.12	768.13
℄ Brg. Pier 1	303+04.04	2.92	768.20	768.20
E	303+14.03	2.92	768.27	768.28
F	303+24.01	2.92	768.34	768.35
G	303+34.00	2.92	768.41	768.42
H	303+43.98	2.92	768.48	768.49
I	303+53.96	2.92	768.54	768.55
℄ Brg. Pier 2	303+61.78	2.92	768.59	768.59
J	303+71.77	2.92	768.65	768.66
K	303+81.75	2.92	768.71	768.72
L	303+91.74	2.92	768.76	768.78
M	304+01.72	2.92	768.81	768.82
℄ Brg. E. Abut.	304+11.14	2.92	768.86	768.86
Bk. of E. Abut.	304+14.53	2.92	768.88	768.88

GIRDER 5

Location	Station	Offset	Theoretical Grade Elevations	Theoretical Grade Elevations Adjusted For Dead Load Deflection
Bk. of W. Abut.	302+57.32	8.75	768.19	768.19
℄ Brg. W. Abut.	302+60.97	8.75	768.23	768.23
A	302+70.93	8.75	768.31	768.33
B	302+80.88	8.75	768.40	768.42
C	302+90.84	8.75	768.48	768.49
D	303+00.79	8.75	768.56	768.56
℄ Brg. Pier 1	303+10.00	8.75	768.63	768.63
E	303+19.95	8.75	768.70	768.70
F	303+29.91	8.75	768.77	768.78
G	303+39.86	8.75	768.84	768.85
H	303+49.82	8.75	768.90	768.91
I	303+59.77	8.75	768.96	768.97
℄ Brg. Pier 2	303+67.39	8.75	769.01	769.01
J	303+77.34	8.75	769.07	769.07
K	303+87.30	8.75	769.12	769.14
L	303+97.25	8.75	769.17	769.19
M	304+07.21	8.75	769.22	769.24
℄ Brg. E. Abut.	304+16.46	8.75	769.27	769.27
Bk. of E. Abut.	304+19.83	8.75	769.29	769.29

GIRDER 6

Location	Station	Offset	Theoretical Grade Elevations	Theoretical Grade Elevations Adjusted For Dead Load Deflection
Bk. of W. Abut.	302+63.55	14.58	768.63	768.63
℄ Brg. W. Abut.	302+67.19	14.58	768.67	768.67
A	302+77.11	14.58	768.75	768.77
B	302+87.03	14.58	768.83	768.86
C	302+96.96	14.58	768.91	768.93
D	303+06.88	14.58	768.99	769.00
℄ Brg. Pier 1	303+15.90	14.58	769.05	769.05
E	303+25.83	14.58	769.13	769.14
F	303+35.75	14.58	769.19	769.21
G	303+45.67	14.58	769.26	769.28
H	303+55.60	14.58	769.32	769.34
I	303+65.52	14.58	769.38	769.39
℄ Brg. Pier 2	303+72.95	14.58	769.43	769.43
J	303+82.87	14.58	769.48	769.50
K	303+92.80	14.58	769.54	769.56
L	304+02.72	14.58	769.59	769.61
M	304+12.65	14.58	769.64	769.65
℄ Brg. E. Abut.	304+21.75	14.58	769.68	769.68
Bk. of E. Abut.	304+25.10	14.58	769.70	769.70

FACE OF SOUTH PARAPET

Location	Station	Offset	Theoretical Grade Elevations	Theoretical Grade Elevations Adjusted For Dead Load Deflection
Bk. of W. Abut.	302+65.06	16.00	768.74	768.74
℄ Brg. W. Abut.	302+68.69	16.00	768.77	768.77
A	302+78.60	16.00	768.86	768.88
B	302+88.52	16.00	768.94	768.96
C	302+98.44	16.00	769.02	769.03
D	303+08.35	16.00	769.09	769.10
℄ Brg. Pier 1	303+17.33	16.00	769.16	769.16
E	303+27.24	16.00	769.23	769.24
F	303+37.16	16.00	769.30	769.32
G	303+47.08	16.00	769.36	769.38
H	303+56.99	16.00	769.43	769.44
I	303+66.91	16.00	769.49	769.49
℄ Brg. Pier 2	303+74.29	16.00	769.53	769.53
J	303+84.21	16.00	769.58	769.60
K	303+94.13	16.00	769.64	769.66
L	304+04.04	16.00	769.69	769.71
M	304+13.96	16.00	769.74	769.75
℄ Brg. E. Abut.	304+23.02	16.00	769.78	769.78
Bk. of E. Abut.	304+26.37	16.00	769.80	769.80

NORTH EDGE OF SHOULDER

Location	Station	Offset	Theoretical Grade Elevations
W. End W. Appr. Slab	302+00.35	-16.00	766.01
A1	302+10.44	-16.00	766.11
A2	302+20.52	-16.00	766.21
E. End W. Appr. Slab	302+30.92	-16.00	766.32

NORTH EDGE OF PAVEMENT

Location	Station	Offset	Theoretical Grade Elevations
W. End W. Appr. Slab	302+04.96	-12.00	766.32
A1	302+15.02	-12.00	766.42
A2	302+25.09	-12.00	766.52
E. End W. Appr. Slab	302+35.38	-12.00	766.62

STAGE CONSTRUCTION JOINT

Location	Station	Offset	Theoretical Grade Elevations
W. End W. Appr. Slab	302+16.34	-2.00	767.10
A1	302+26.35	-2.00	767.20
A2	302+36.36	-2.00	767.29
E. End W. Appr. Slab	302+46.40	-2.00	767.39

℄ ROADWAY & P.G.L.

Location	Station	Offset	Theoretical Grade Elevations
W. End W. Appr. Slab	302+18.59	0.00	767.25
A1	302+28.59	0.00	767.35
A2	302+38.59	0.00	767.44
E. End W. Appr. Slab	302+48.59	0.00	767.54

SOUTH EDGE OF PAVEMENT

Location	Station	Offset	Theoretical Grade Elevations
W. End W. Appr. Slab	302+31.94	12.00	768.17
A1	302+41.88	12.00	768.27
A2	302+51.81	12.00	768.36
E. End W. Appr. Slab	302+61.53	12.00	768.45

SOUTH EDGE OF SHOULDER

Location	Station	Offset	Theoretical Grade Elevations
W. End W. Appr. Slab	302+36.33	16.00	768.48
A1	302+46.25	16.00	768.57
A2	302+56.16	16.00	768.66
E. End W. Appr. Slab	302+65.78	16.00	768.75

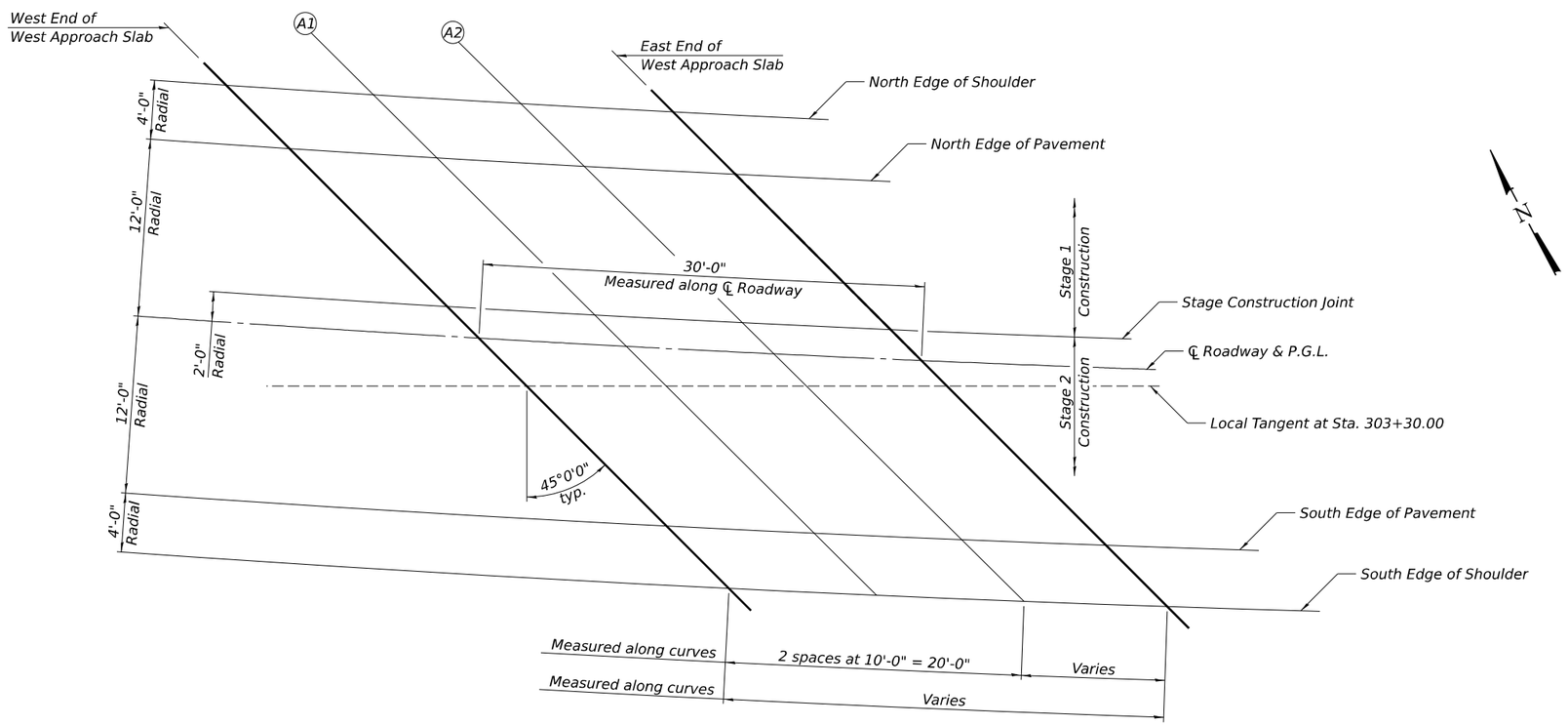

PLAN

FILE NAME: H:\P222101 - D3 V-V\WO 12 - IL 72 over Owens Creek\Bridge\Microstation\0190030-66K63-010-Top of West Approach Slab Elevations.dgn

OATES ASSOCIATES
www.oatesassociates.com
ILLINOIS DESIGN FIRM LICENSE NO.: 184.001115

USER NAME =	DESIGNED - ETH	REVISED -	
	CHECKED - ORG	REVISED -	
PLOT SCALE =	DRAWN - ETH	REVISED -	
PLOT DATE = 4/10/2025	CHECKED - ORG	REVISED -	

STATE OF ILLINOIS
DEPARTMENT OF TRANSPORTATION

TOP OF WEST APPROACH SLAB ELEVATIONS
STRUCTURE NO. 019-0030

SHEET 10 OF 42 SHEETS

F.A.P. RTE.	SECTION	COUNTY	TOTAL SHEETS	SHEET NO.
553	(125BR)ES	DEKALB	96	49

CONTRACT NO. 66K63

ILLINOIS | FED. AID PROJECT

NORTH EDGE OF SHOULDER

Location	Station	Offset	Theoretical Grade Elevations
W. End E. Appr. Slab	303+96.30	-16.00	767.54
A3	304+06.39	-16.00	767.59
A4	304+16.47	-16.00	767.64
E. End E. Appr. Slab	304+26.77	-16.00	767.69

NORTH EDGE OF PAVEMENT

Location	Station	Offset	Theoretical Grade Elevations
W. End E. Appr. Slab	304+00.06	-12.00	767.82
A3	304+10.12	-12.00	767.87
A4	304+20.18	-12.00	767.92
E. End E. Appr. Slab	304+30.40	-12.00	767.97

STAGE CONSTRUCTION JOINT

Location	Station	Offset	Theoretical Grade Elevations
W. End E. Appr. Slab	304+09.34	-2.00	768.52
A3	304+19.35	-2.00	768.57
A4	304+29.36	-2.00	768.62
E. End E. Appr. Slab	304+39.39	-2.00	768.68

℄ ROADWAY & P.G.L.

Location	Station	Offset	Theoretical Grade Elevations
W. End E. Appr. Slab	304+11.18	0.00	768.67
A3	304+21.18	0.00	768.72
A4	304+31.18	0.00	768.77
E. End E. Appr. Slab	304+41.18	0.00	768.82

SOUTH EDGE OF PAVEMENT

Location	Station	Offset	Theoretical Grade Elevations
W. End E. Appr. Slab	304+22.10	12.00	769.51
A3	304+32.04	12.00	769.56
A4	304+41.97	12.00	769.61
E. End E. Appr. Slab	304+51.76	12.00	769.66

SOUTH EDGE OF SHOULDER

Location	Station	Offset	Theoretical Grade Elevations
W. End E. Appr. Slab	304+25.70	16.00	769.79
A3	304+35.61	16.00	769.84
A4	304+45.53	16.00	769.89
E. End E. Appr. Slab	304+55.25	16.00	769.94

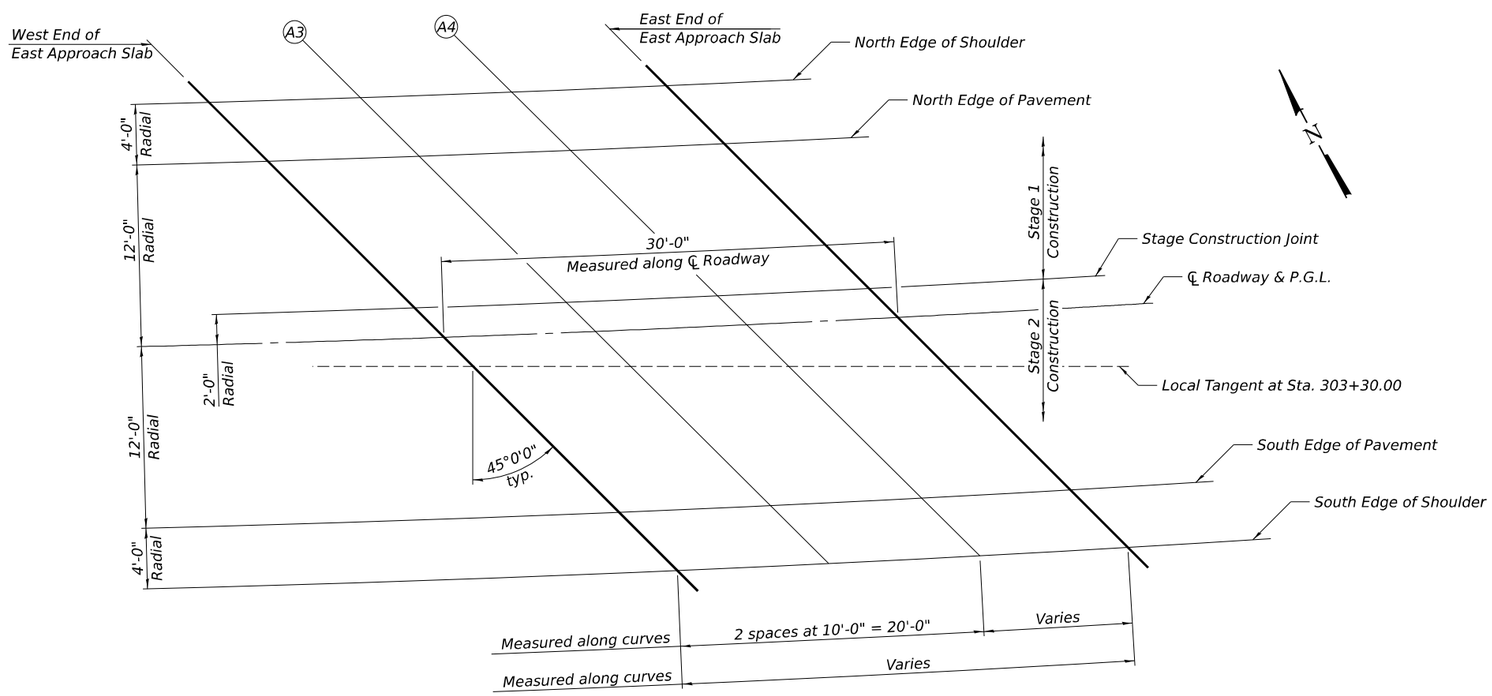

PLAN

FILE NAME: H:\P222101 - D3 V-VWO 12 - IL 72 over Owens Creek\Bridge\Microstation\0190030-66K63-011-Top of East Approach Slab Elevations.dgn

OATES ASSOCIATES
www.oatesassociates.com
ILLINOIS DESIGN FIRM LICENSE NO.: 184.001115

USER NAME =	DESIGNED - ETH	REVISED -	
	CHECKED - ORG	REVISED -	
PLOT SCALE =	DRAWN - ETH	REVISED -	
PLOT DATE = 4/10/2025	CHECKED - ORG	REVISED -	

STATE OF ILLINOIS
DEPARTMENT OF TRANSPORTATION

TOP OF EAST APPROACH SLAB ELEVATIONS
STRUCTURE NO. 019-0030

SHEET 11 OF 42 SHEETS

F.A.P. RTE.	SECTION	COUNTY	TOTAL SHEETS	SHEET NO.
553	(125BR)ES	DEKALB	96	50

CONTRACT NO. 66K63

ILLINOIS | FED. AID PROJECT

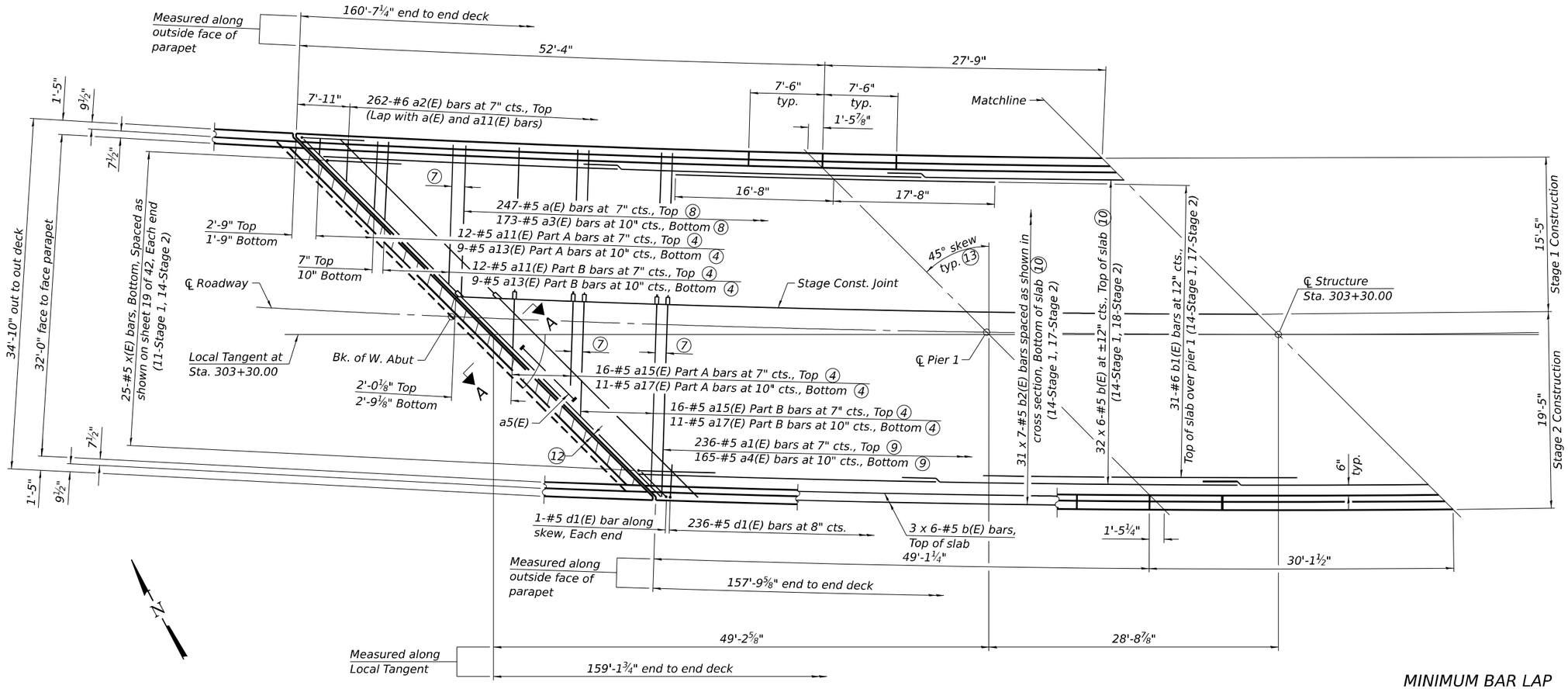

PARTIAL PLAN

MINIMUM BAR LAP

#5 Bar = 3'-6"

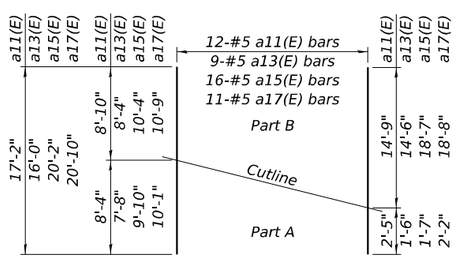

FIELD CUTTING DIAGRAM

Order bars full length.
Cut as shown and divide into two parts, lower (Part A) and upper (Part B)

Notes:

1. For Section A-A, see sheet 19 of 42.
2. For superstructure details, bar details, drain details, parapet reinforcement and bill of material, see sheets 15 through 16 of 42.
3. Bars indicated thus 32 x 6-#5 etc. indicates 32 lines of bars with 6 lengths per line.
4. See Field Cutting Diagrams.
5. For details of Bar Splicers, see sheet 40 of 42.
6. For location of Drainage Scupper, see sheet 1 of 42.
7. 7" Top
   10" Bottom
8. Place bars radially with max spacing along N. side.
9. Place bars radially with max spacing along S. side.
10. Increase lap length as needed to fit.
11. All transverse dimensions are radial unless otherwise noted.
12. For joint opening, see sheet 18 of 42.
13. Skew shown is measured from the Local Tangent at Sta. 303+30.00.

FILE NAME: H:\P222101 - D3 V-VWO 12 - IL 72 over Owens Creek\Bridge\Microstation\0190030-66K63-012-Superstructure Plan.dgn

OATES ASSOCIATES
www.oatesassociates.com
ILLINOIS DESIGN FIRM LICENSE NO.: 184.001115

USER NAME =	DESIGNED - BAW	REVISED -	
	CHECKED - KP	REVISED -	
PLOT SCALE =	DRAWN - BAW	REVISED -	
PLOT DATE = 4/10/2025	CHECKED - KP	REVISED -	

STATE OF ILLINOIS
DEPARTMENT OF TRANSPORTATION

SUPERSTRUCTURE PLAN
STRUCTURE NO. 019-0030

SHEET 12 OF 42 SHEETS

F.A.P. RTE.	SECTION	COUNTY	TOTAL SHEETS	SHEET NO.
553	(125BR)ES	DEKALB	96	51
		CONTRACT NO. 66K63		
		ILLINOIS	FED. AID PROJECT	

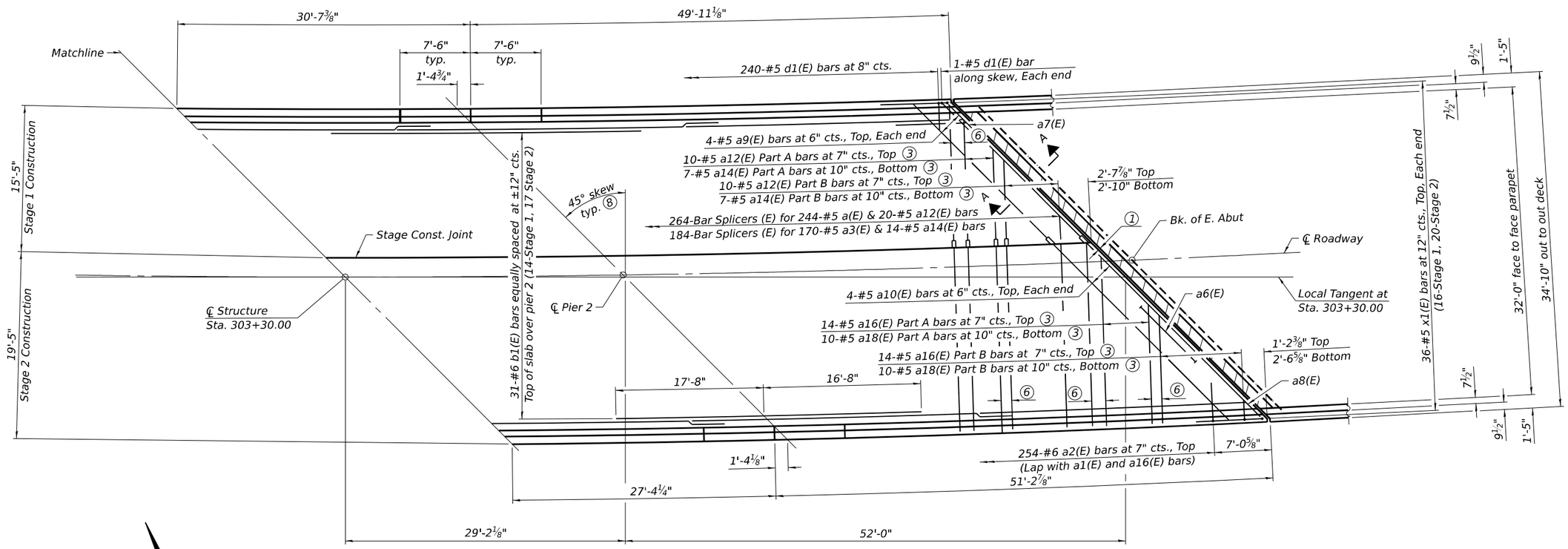

PARTIAL PLAN

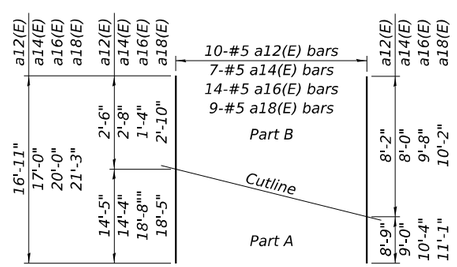

FIELD CUTTING DIAGRAM

Order bars full length.
Cut as shown and divide into two parts, lower (Part A) and upper (Part B)

Notes:

① For joint opening, see sheet 18 of 42.
② For superstructure details, bar details, parapet reinforcement and bill of material, see sheet 15 through 16 of 42.
③ See Field Cutting Diagram.
④ For details of Bar Splicers, see sheet 40 of 42.
⑤ For Section A-A, see sheet 19 of 42.
⑥ 7" Top
10" Bottom.
⑦ All transverse dimensions are radial unless otherwise noted.
⑧ Skew shown is measured from the Local Tangent at Sta. 303+30.00.

FILE NAME: H:\P222101 - D3 V-VWO 12 - IL 72 over Owens Creek\Bridge\Microstation\0190030-66K63-013-Superstructure Plan.dgn

OATES ASSOCIATES
www.oatesassociates.com
ILLINOIS DESIGN FIRM LICENSE NO.: 184.001115

USER NAME =	DESIGNED - BAW	REVISED -	
	CHECKED - KP	REVISED -	
PLOT SCALE =	DRAWN - BAW	REVISED -	
PLOT DATE = 4/10/2025	CHECKED - KP	REVISED -	

STATE OF ILLINOIS
DEPARTMENT OF TRANSPORTATION

SUPERSTRUCTURE PLAN
STRUCTURE NO. 019-0030

SHEET 13 OF 42 SHEETS

F.A.P. RTE.	SECTION	COUNTY	TOTAL SHEETS	SHEET NO.
553	(125BR)ES	DEKALB	96	52

CONTRACT NO. 66K63

ILLINOIS | FED. AID PROJECT

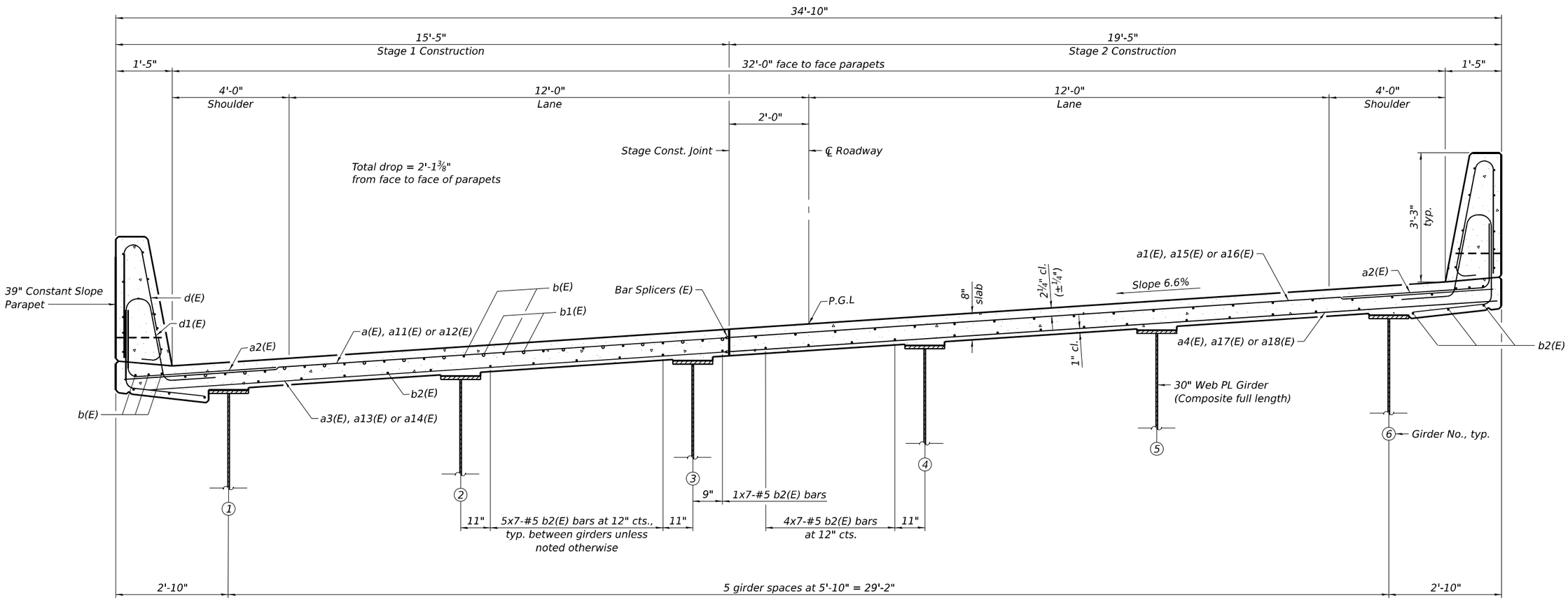

NEAR PIER

NEAR MIDSPAN

CROSS SECTION

(Looking East)

FILE NAME: H:\P222101 - D3 V-VIWO 12 - IL 72 over Owens Creek\Bridge\Microstation\0190030-66K63-014-Superstructure Cross Section.dgn

OATES ASSOCIATES
www.oatesassociates.com
ILLINOIS DESIGN FIRM LICENSE NO.: 184.001115

USER NAME =	DESIGNED - BAW	REVISED -	
	CHECKED - KP	REVISED -	
PLOT SCALE =	DRAWN - BAW	REVISED -	
PLOT DATE = 4/10/2025	CHECKED - KP	REVISED -	

STATE OF ILLINOIS
DEPARTMENT OF TRANSPORTATION

SUPERSTRUCTURE CROSS SECTION
STRUCTURE NO. 019-0030

SHEET 14 OF 42 SHEETS

F.A.P. RTE.	SECTION	COUNTY	TOTAL SHEETS	SHEET NO.
553	(125BR)ES	DEKALB	96	53
		CONTRACT NO. 66K63		
		ILLINOIS	FED. AID PROJECT	

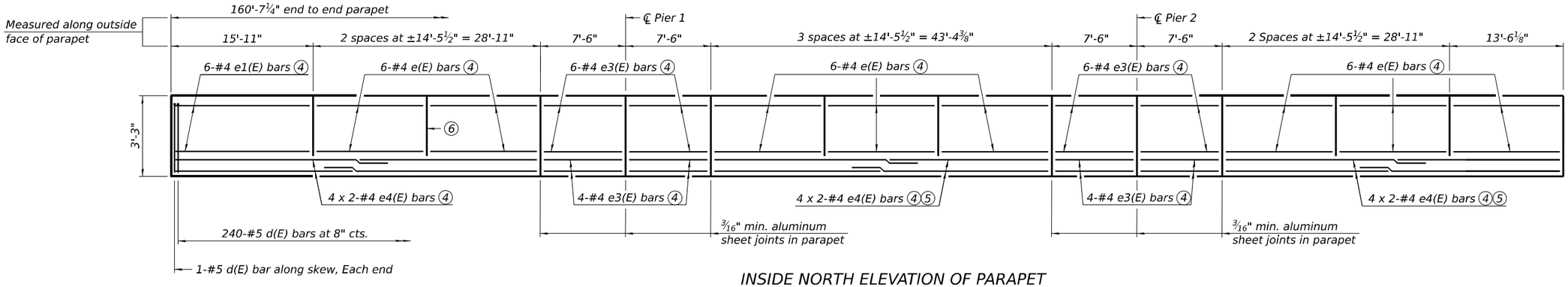

INSIDE NORTH ELEVATION OF PARAPET

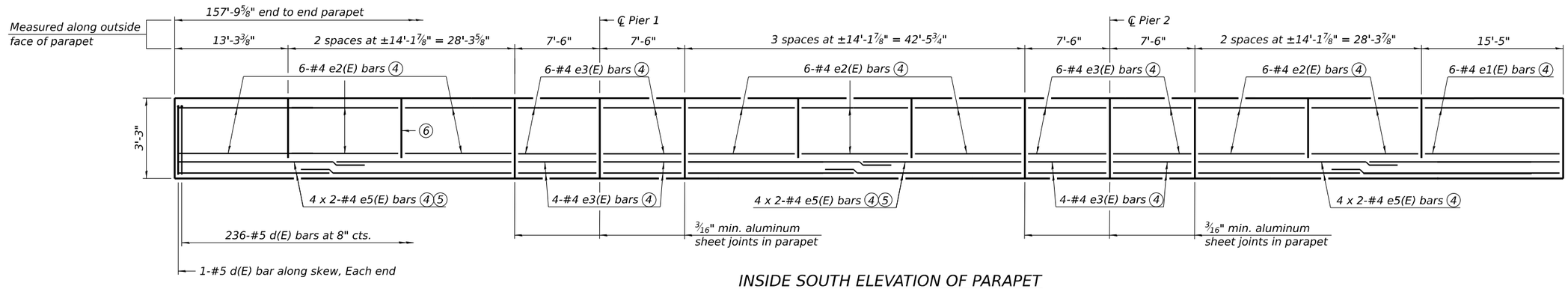

INSIDE SOUTH ELEVATION OF PARAPET

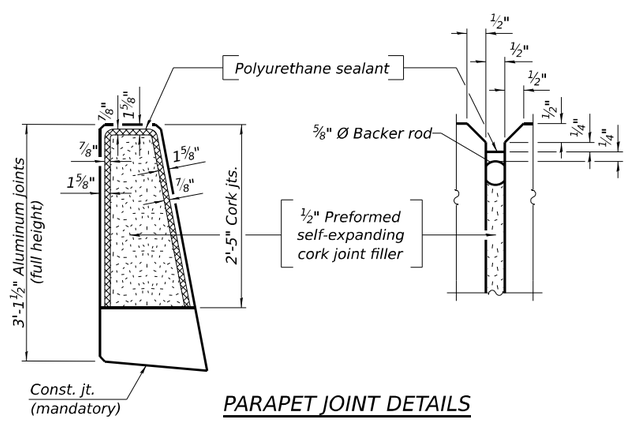

PARAPET JOINT DETAILS

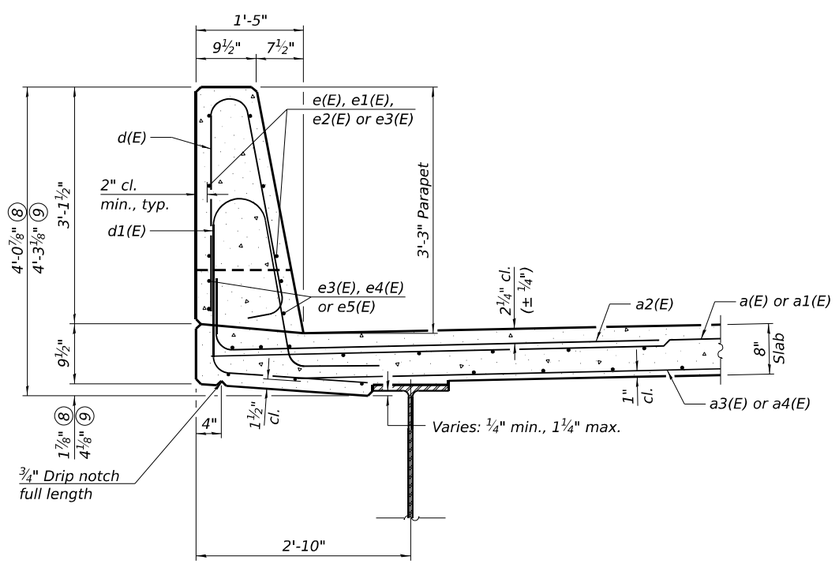

SECTION THRU PARAPET 7

MINIMUM BAR LAP

#4 bar = 2'-5"

Notes:

1. The 3/16" minimum aluminum sheet shall be ASTM B 209 alloy 3003-H14 and coated with 5 mils of either bitumen paint or epoxy paint to minimize reaction with wet concrete. Cost included with Concrete Superstructure.
2. The Polyurethane Sealant shall be according to Article 1050.04 of the Std. Spec. and the color shall be gray.
3. Bar indicated thus 4 x 2-#4 etc. indicates 4 lines of bars with 2 lengths per line.
4. See section through parapet.
5. Increase lap length to fit.
6. Cork joint (typical between panels except at aluminum joints).
7. North parapet shown, south parapet similar
8. North parapet.
9. South parapet.

FILE NAME: H:\PQ22101 - D3 V-VWO 12 - IL 72 over Owens Creek\Bridge\Microstation\0190030-66K63-015-Superstructure Details.dgn

OATES ASSOCIATES
www.oatesassociates.com
ILLINOIS DESIGN FIRM LICENSE NO.: 184.001115

USER NAME =	DESIGNED - BAW	REVISED -	
	CHECKED - KP	REVISED -	
PLOT SCALE =	DRAWN - BAW	REVISED -	
PLOT DATE = 4/10/2025	CHECKED - KP	REVISED -	

STATE OF ILLINOIS
DEPARTMENT OF TRANSPORTATION

SUPERSTRUCTURE DETAILS
STRUCTURE NO. 019-0030

SHEET 15 OF 42 SHEETS

F.A.P. RTE.	SECTION	COUNTY	TOTAL SHEETS	SHEET NO.
553	(125BR)ES	DEKALB	96	54
		CONTRACT NO. 66K63		
		ILLINOIS	FED. AID PROJECT	

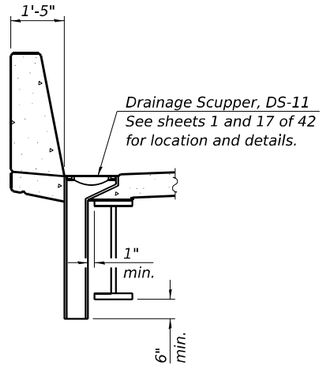

SECTION A-A

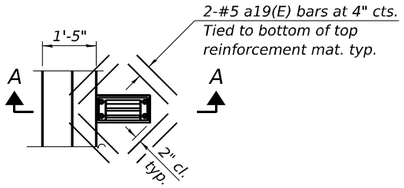

PLAN ②

SUPERSTRUCTURE BILL OF MATERIAL

Bar	No.	Size	Length	Shape
a(E)	247	#5	15'-1"	
a1(E)	236	#5	19'-1"	
a2(E)	516	#6	8'-4"	
a3(E)	173	#5	14'-9	
a4(E)	165	#5	18'-9"	
a5(E)	12	#5	8'-3"	
a6(E)	12	#5	7'-7"	
a7(E)	2	#5	21'-11"	
a8(E)	2	#5	27'-7"	
a9(E)	8	#5	22'-5"	
a10(E)	8	#5	28'-0"	
a11(E)	12	#5	17'-2"	
a12(E)	10	#5	16'-11"	
a13(E)	9	#5	16'-0"	
a14(E)	7	#5	17'-0"	
a15(E)	16	#5	20'-2"	
a16(E)	14	#5	20'-0"	
a17(E)	11	#5	20'-10"	
a18(E)	9	#5	21'-3"	
a19(E)	8	#5	2'-0"	
a29(E)	3	#5	7'-1"	
a30(E)	3	#5	6'-5"	
b(E)	228	#5	29'-8"	
b1(E)	62	#6	34'-4"	
b2(E)	217	#5	25'-11"	
d(E)	480	#5	6'-5"	
d1(E)	480	#5	8'-2"	
e(E)	48	#4	14'-2"	
e1(E)	12	#4	15'-7"	
e2(E)	48	#4	13'-10"	
e3(E)	80	#4	7'-2"	
e4(E)	24	#4	23'-5"	
e5(E)	24	#4	22'-11"	
x(E)	50	#5	6'-6"	
x1(E)	72	#5	4'-1"	
Reinforcement Bars, Epoxy Coated			Lbs.	49,660
Concrete Superstructure			Cu. Yds.	198.1

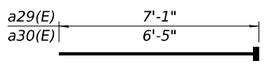

BARS a29(E) & a30(E)
(Headed. 6-#5 Bar terminators)

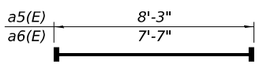

BARS a5(E) & a6(E)
(Headed. 48-#5 Bar terminators)

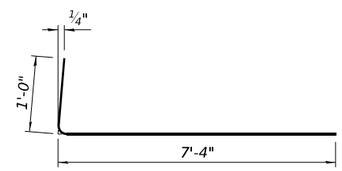

BAR a2(E)

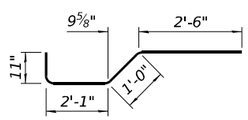

BAR x(E)

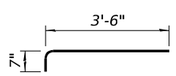

BAR x1(E)

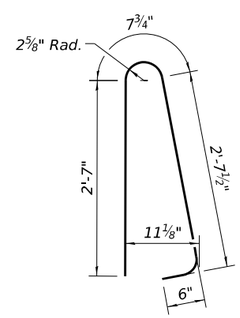

BAR d(E)

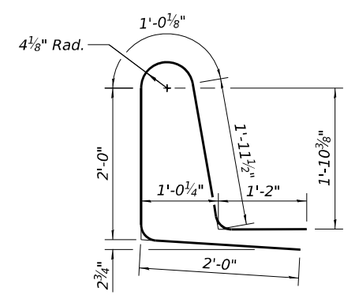

BAR d1(E)

Notes:
① Bar terminators, paid for separately, See Total Bill of Material.
② Cut longitudinal reinforcement to clear drainage scuppers.

SDE-SB-2 10-27-2023

FILE NAME: H:\P222101 - D3 V-VWO 12 - IL 72 over Owens Creek\Bridge\Microstation\0190030-66K63-016-Superstructure Details.dgn

OATES ASSOCIATES
www.oatesassociates.com
ILLINOIS DESIGN FIRM LICENSE NO.: 184.001115

USER NAME =	DESIGNED - BAW	REVISED -	
	CHECKED - KP	REVISED -	
PLOT SCALE =	DRAWN - BAW	REVISED -	
PLOT DATE = 4/10/2025	CHECKED - KP	REVISED -	

STATE OF ILLINOIS
DEPARTMENT OF TRANSPORTATION

SUPERSTRUCTURE DETAILS
STRUCTURE NO. 019-0030

SHEET 16 OF 42 SHEETS

F.A.P. RTE.	SECTION	COUNTY	TOTAL SHEETS	SHEET NO.
553	(125BR)ES	DEKALB	96	55

CONTRACT NO. 66K63

ILLINOIS FED. AID PROJECT

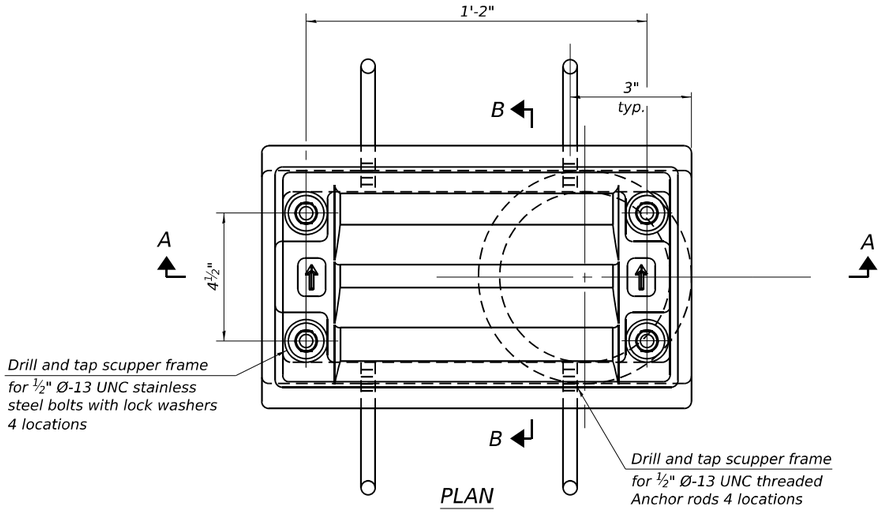

PLAN

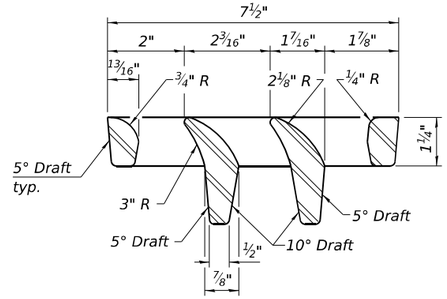

VANE GRATE DETAIL

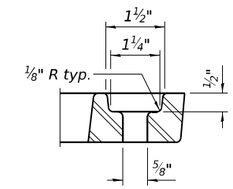

GRATE BOLT HOLE DETAIL

Notes:

All cast iron parts shall be gray iron conforming to the requirements of AASHTO M105, Class 35B and AASHTO M306.

Bolts, anchor rods, nuts and washers shall be according to ASTM A307 and shall be galvanized according to AASHTO M232. As an alternate stainless steel may be used.

Stainless steel hardware shall be according to Article 1006.29(d) of the Standard Specifications.

Structural steel weldments of equal sections and of the same configuration may be substituted for the cast iron scupper frames and downspouts; however, the scupper grates shall remain cast iron. Fillet or full penetration welds shall be used for the weldments. Details shall be submitted to the Engineer for approval.

Structural steel scupper frames and downspouts, when utilized, shall be galvanized according to AASHTO M111.

As an alternate, fiberglass may be used for downspouts according to ASTM D2996 with a short-time rupture strength hoop tensile stress of 30,000 psi min. in lieu of the cast iron or structural steel.

Exterior surfaces of downspouts and exterior exposed surfaces of the scupper frame below deck shall be pigmented or painted to match the color of the adjacent beam.

The Contractor shall take appropriate measures to assure that Protective Coat is not applied to the scupper.

Cost of the grate, frame, downspout, anchor rods, nuts and washers including complete installation of the scupper shall be paid for at the contract unit price for Drainage Scuppers, DS-11.

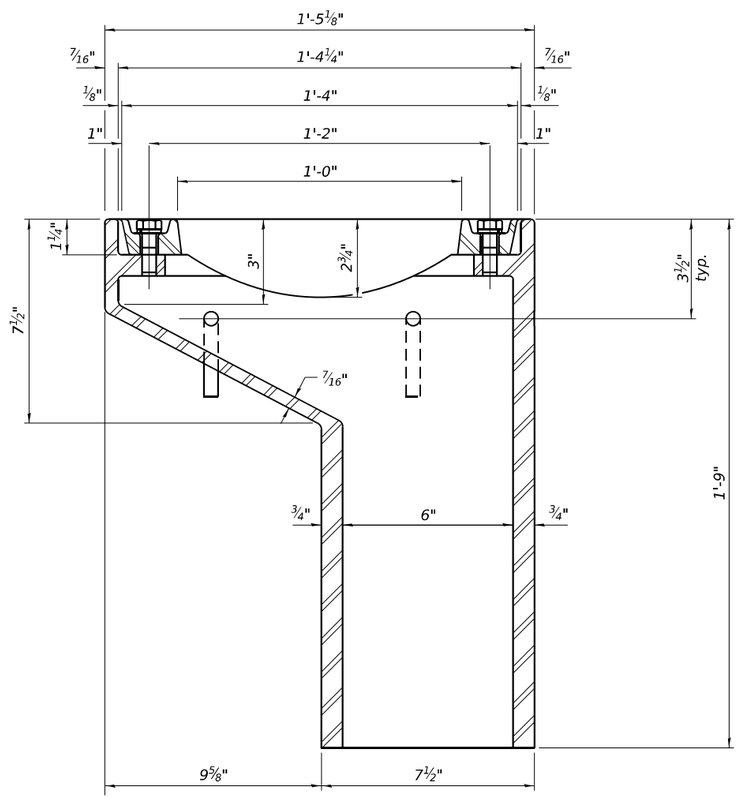

SECTION A-A

See sheet 16 of 42 for scupper location relative to parapet.

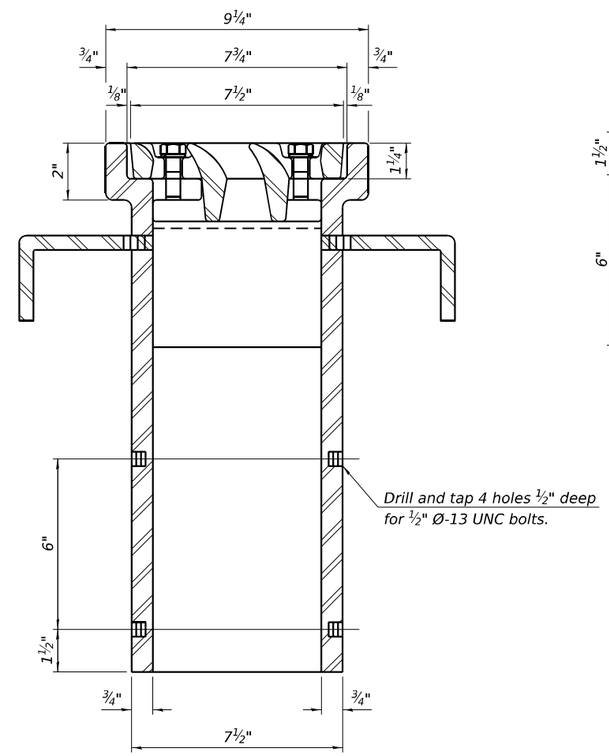

SECTION B-B

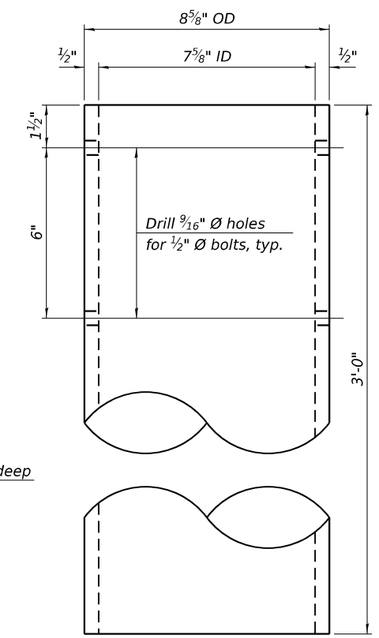

DOWNSPOUT

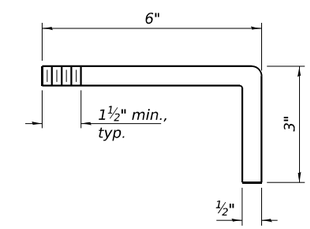

ANCHOR ROD DETAIL

BILL OF MATERIAL

ITEM	UNIT	QUANTITY
Drainage Scuppers, DS-11	Each	1

DS-11 5-15-2023

FILE NAME: H:\P\222101 - D3 V-V\WO 12 - IL 72 over Owens Creek\Bridge\Microstation\0190030-66K63-017-Drainage Scuppers, DS-11.dgn

OATES ASSOCIATES www.oatesassociates.com ILLINOIS DESIGN FIRM LICENSE NO.: 184.001115

USER NAME =	DESIGNED - KP	REVISED -	
	CHECKED - ETH	REVISED -	
PLOT SCALE =	DRAWN - KP	REVISED -	
PLOT DATE = 4/10/2025	CHECKED - ETH	REVISED -	

STATE OF ILLINOIS
DEPARTMENT OF TRANSPORTATION

DRAINAGE SCUPPERS, DS-11
STRUCTURE NO. 019-0030

SHEET 17 OF 42 SHEETS

F.A.P. RTE.	SECTION	COUNTY	TOTAL SHEETS	SHEET NO.
553	(125BR)ES	DEKALB	96	56
		CONTRACT NO. 66K63		
		ILLINOIS	FED. AID PROJECT	

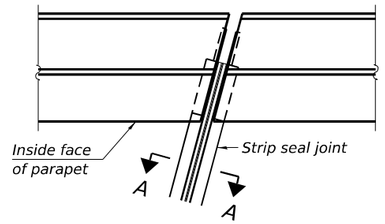

FOR SKEWS ≤ 30°

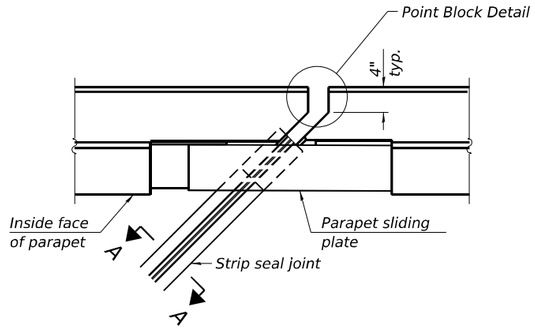

FOR SKEWS > 30°

PLAN AT PARAPET

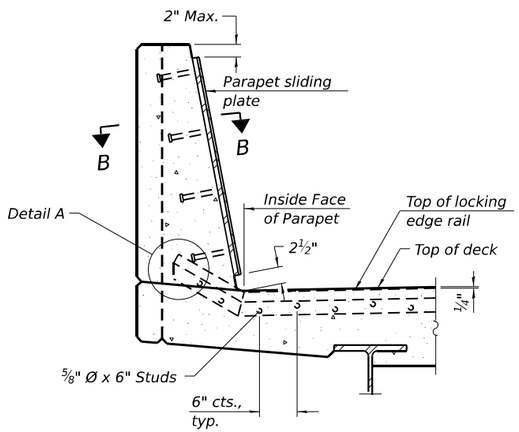

SECTION AT PARAPET

(Skews > 30° shown. Skews ≤ 30° similar except as shown in plan view.)

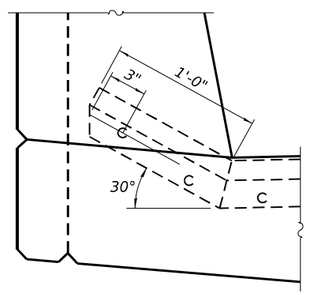

DETAIL A

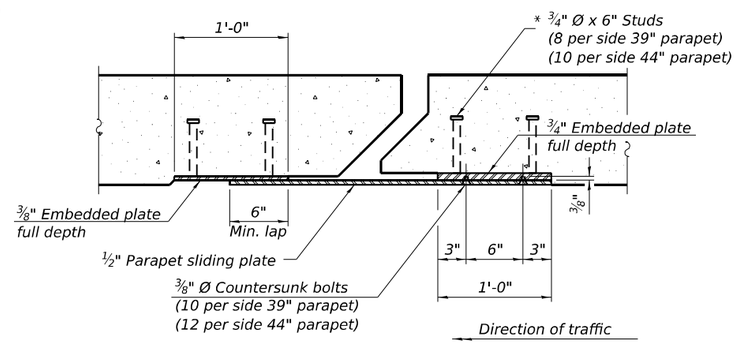

SECTION B-B

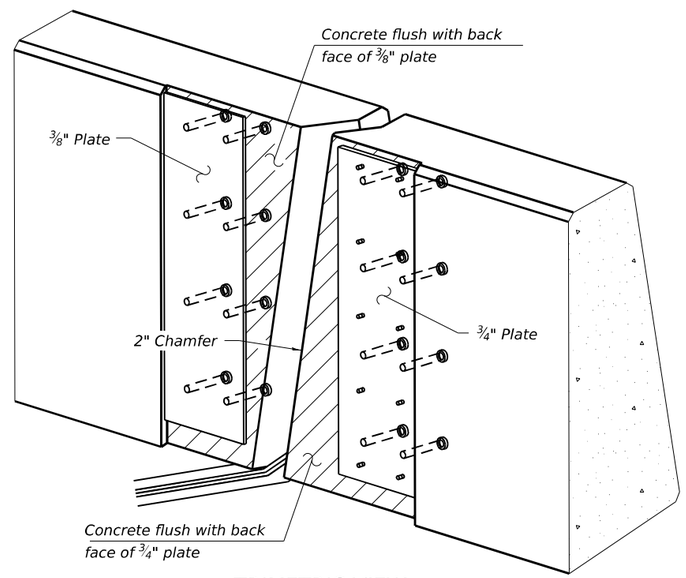

TRIMETRIC VIEW

(Showing embedded plates only)

Notes:

The strip seal shall be made continuous and shall have a minimum thickness of ¼". The configuration of the strip seal shall match the configuration of the locking edge rails. Open or "webbed" strip seal gland configurations are not permitted. The gland shall be sized for a maximum rated movement of 4 inches.

The locking edge rails depicted are configured for typical applications and are conceptual only. The actual configuration of the locking edge rails and matching strip seal may vary from manufacturer to manufacturer provided they fit the application and meet the minimum anchorage shown. Flanged edge rails, however, will not be allowed. Locking edge rails may exceed the 4½" maximum depth provided the anchorage system is revised according to the manufacturer's recommendation.

The manufacturer's recommended installation methods shall be followed.

All steel components shall be galvanized after fabrication according to Article 520.03 of the Standard Specifications.

The Maximum space between locking edge rail segments shall be c" and sealed with a suitable sealant; however, any rail joint within 10' measured perpendicular to the face of the curb or parapet shall be welded as shown in the locking edge rail splice detail.

Cost of parapet sliding plates, embedded plates, and anchorage studs included with Preformed Joint Strip Seal.

39" constant slope barrier shown, 44" constant slope barrier similar as noted.

The concrete opening below the strip seal will vary based on the locking edge rail chosen by the Contractor. Deck and parapet lengths shown elsewhere in the plans are dimensioned to the concrete opening, not the joint opening, and are based on the rolled locking edge rail. If the Contractor elects to use a different locking edge rail, dimensional adjustments may be required. One exception to this would be the strip seal joint at the end of the precast bridge approach slab. For these cases the pavement connector length shall be adjusted, not the length of the bridge approach slab.

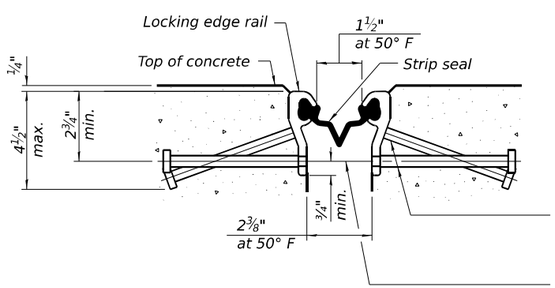

SHOWING ROLLED RAIL JOINT

* ⅝" Ø x 6" studs @ 6" cts. (alternate angled/bent studs with horizontal studs)

⅜" Ø threaded rods in 7/16" Ø holes at 4'-0"± cts. for holding the proper joint opening based on the temperature during the deck pour. Place to miss studs. All rods shall be burned, or sawed off flush with the plates after concrete is set.

SECTION A-A

* Granular or solid flux filled headed studs conforming to Article 1006.32 of the Std. Specs., automatically end welded.

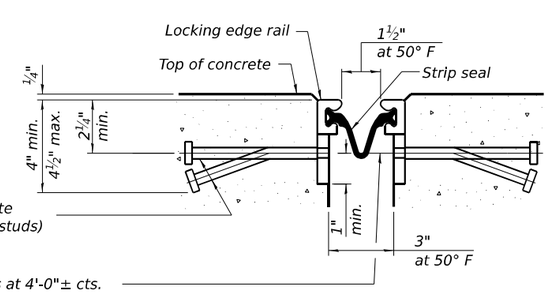

SHOWING WELDED RAIL JOINT

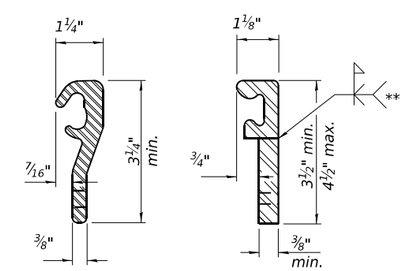

ROLLED (EXTRUDED) RAIL

WELDED RAIL

LOCKING EDGE RAILS

** Back gouge not required if complete joint penetration is verified by mock-up.

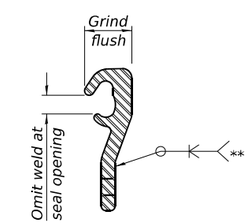

LOCKING EDGE RAIL SPLICE

The inside of the locking edge rail groove shall be free of weld residue. Rolled rail shown, welded rail similar.

BILL OF MATERIAL

Item	Unit	Total
Preformed Joint Strip Seal	Foot	95.0

EJ-SS 5-15-2023

FILE NAME: H:\P\22\101 - D3 V-V\WO 12 - IL 72 over Owens Creek\Bridge\Microstation\0190030-66K63-018-Preformed Joint Strip Seal.dgn

OATES ASSOCIATES
www.oatesassociates.com
ILLINOIS DESIGN FIRM LICENSE NO.: 184.001115

USER NAME =	DESIGNED - ETH	REVISED -	
	CHECKED - ORG	REVISED -	
PLOT SCALE =	DRAWN - BAW	REVISED -	
PLOT DATE = 4/10/2025	CHECKED - ETH	REVISED -	

STATE OF ILLINOIS
DEPARTMENT OF TRANSPORTATION

PREFORMED JOINT STRIP SEAL
STRUCTURE NO. 019-0030

SHEET 18 OF 42 SHEETS

F.A.P. RTE.	SECTION	COUNTY	TOTAL SHEETS	SHEET NO.
553	(125BR)ES	DEKALB	96	57
		CONTRACT NO. 66K63		
	ILLINOIS	FED. AID PROJECT		

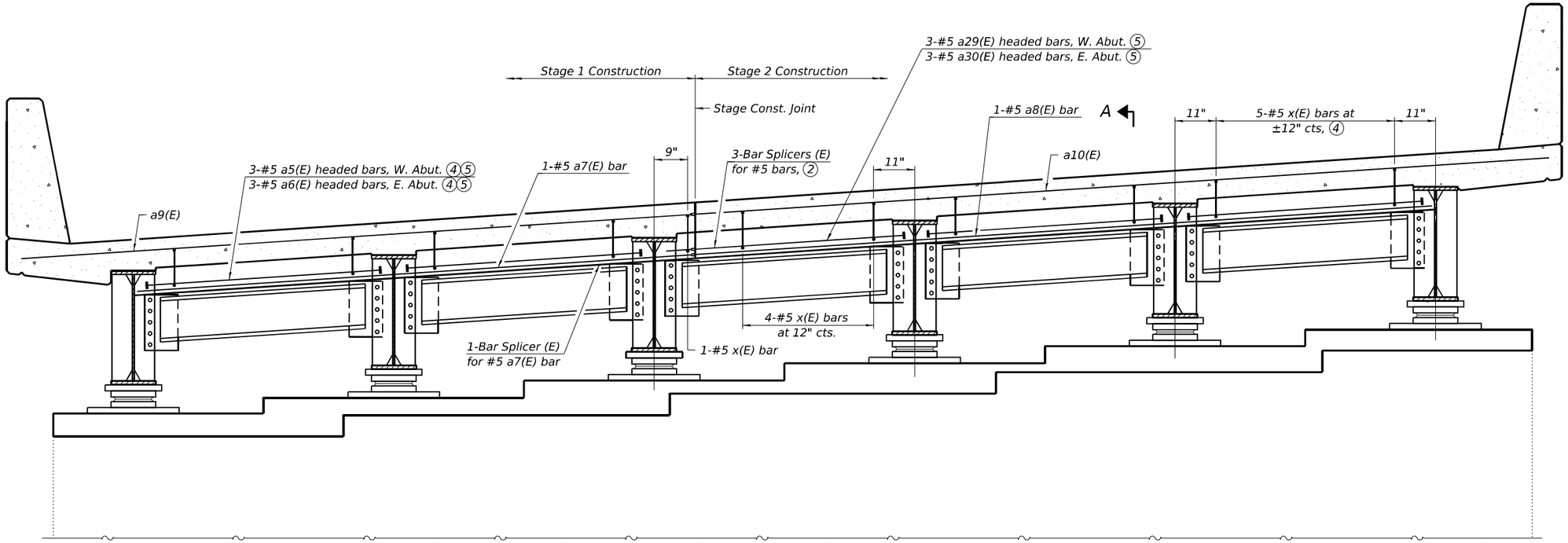

DIAPHRAGM AT ABUTMENT

(East Abutment diaphragm, looking east, West Abutment diaphragm similar)

A

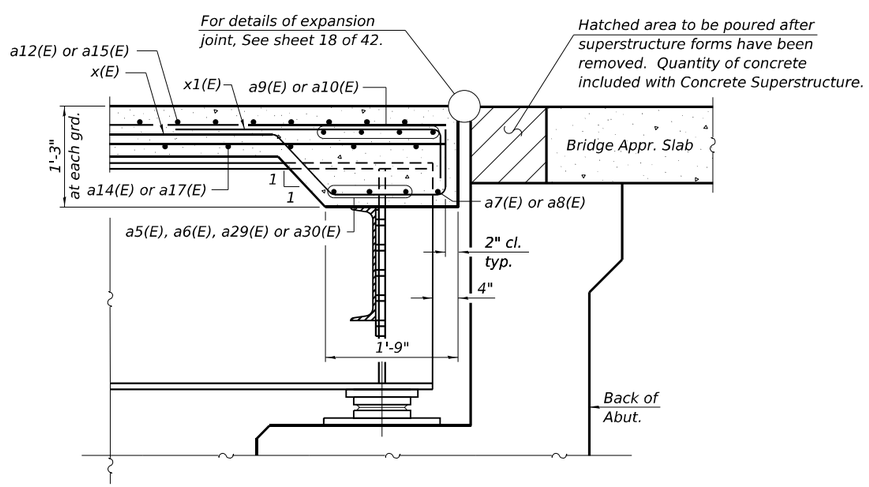

SECTION A-A

(at Rt. ∠'s)

Notes:

1. See sheet 16 of 42 for superstructure details and Bill of Material.
2. Cut Bar Splicers as required to provide adequate clearance to girders.
3. The x(E) and x1(E) bars shall be placed parallel to the girders. Spacing for these bars shall be at right angles to the girders.
4. Typical between girders unless noted otherwise.
5. See Section A-A.

FILE NAME: H:\P222101 - D3 V-VWO 12 - IL 72 over Owens Creek\Bridge\Microstation\0190030-66K63-019-Diaphragm Details.dgn

OATES ASSOCIATES
www.oatesassociates.com
ILLINOIS DESIGN FIRM LICENSE NO.: 184.001115

USER NAME =	DESIGNED - BAW	REVISED -	
	CHECKED - KP	REVISED -	
PLOT SCALE =	DRAWN - BAW	REVISED -	
PLOT DATE = 4/10/2025	CHECKED - KP	REVISED -	

STATE OF ILLINOIS
DEPARTMENT OF TRANSPORTATION

DIAPHRAGM DETAILS
STRUCTURE NO. 019-0030

SHEET 19 OF 42 SHEETS

F.A.P. RTE.	SECTION	COUNTY	TOTAL SHEETS	SHEET NO.
553	(125BR)ES	DEKALB	96	58

CONTRACT NO. 66K63

ILLINOIS | FED. AID PROJECT

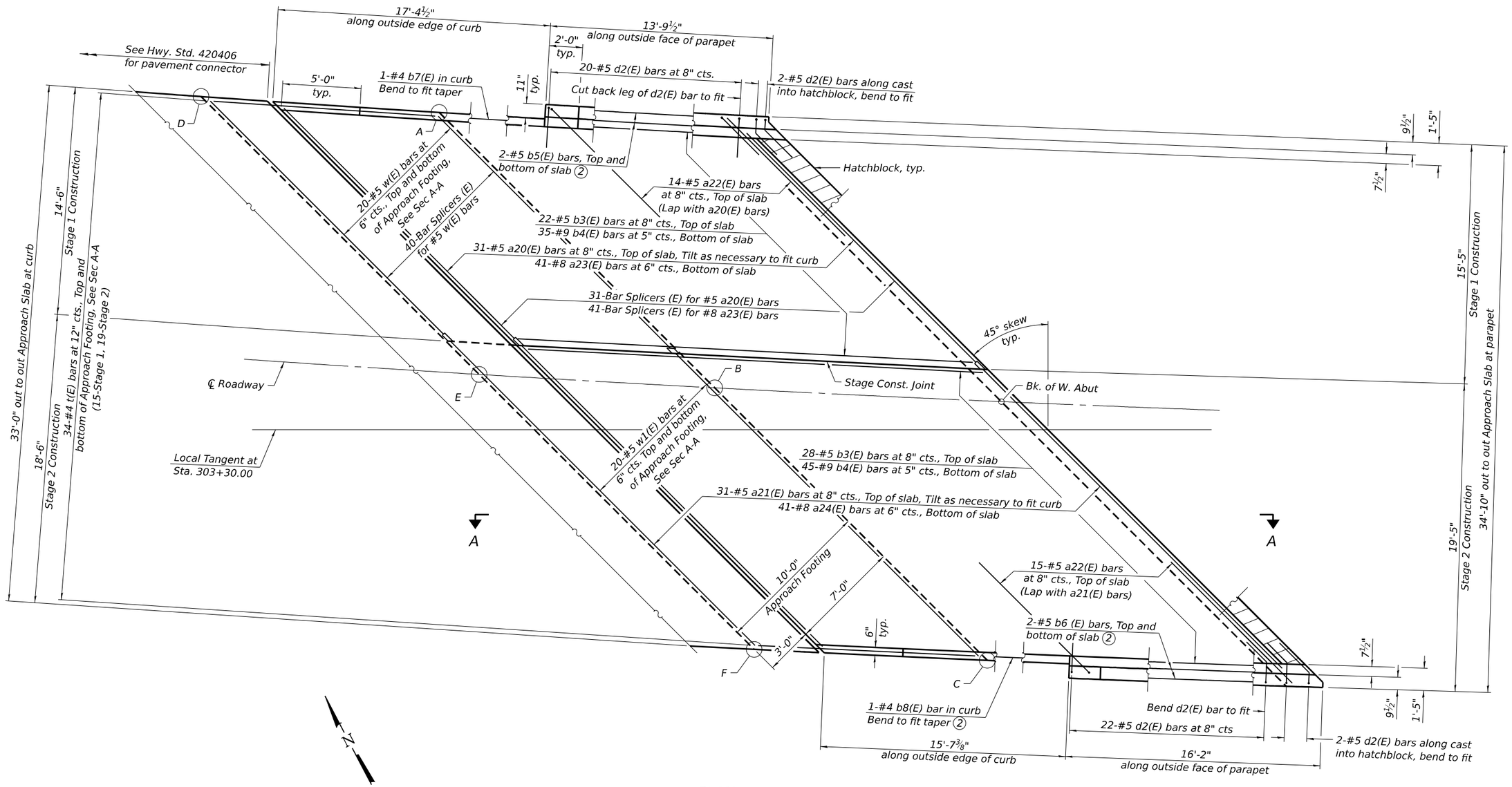

PLAN

TOP AND BOTTOM ELEVATIONS FOR APPROACH FOOTING

West Approach		
Point/ Location	Top	Bottom
A -	764.63	763.80
B -	765.92	765.09
C -	767.19	766.36
D -	764.46	763.63
E -	765.76	764.93
F -	767.04	766.21

Notes:
1. For Section A-A, see sheet 24 of 42.
2. Trim bars as needed to fit.
3. All transverse dimensions are radial unless otherwise noted.

FILE NAME: H:\P222101 - D3 V-VWO 12 - IL 72 over Owens Creek\Bridge\Microstation\0190030-66K63-020-Bridge Approach Slab Details - West.dgn

OATES ASSOCIATES
www.oatesassociates.com
ILLINOIS DESIGN FIRM LICENSE NO.: 184.001115

USER NAME =	DESIGNED - BAW	REVISED -	
	CHECKED - KP	REVISED -	
PLOT SCALE =	DRAWN - BAW	REVISED -	
PLOT DATE = 4/10/2025	CHECKED - KP	REVISED -	

STATE OF ILLINOIS
DEPARTMENT OF TRANSPORTATION

WEST BRIDGE APPROACH SLAB PLAN
STRUCTURE NO. 019-0030

SHEET 20 OF 42 SHEETS

F.A.P. RTE.	SECTION	COUNTY	TOTAL SHEETS	SHEET NO.
553	(125BR)ES	DEKALB	96	59
		CONTRACT NO. 66K63		
		ILLINOIS	FED. AID PROJECT	

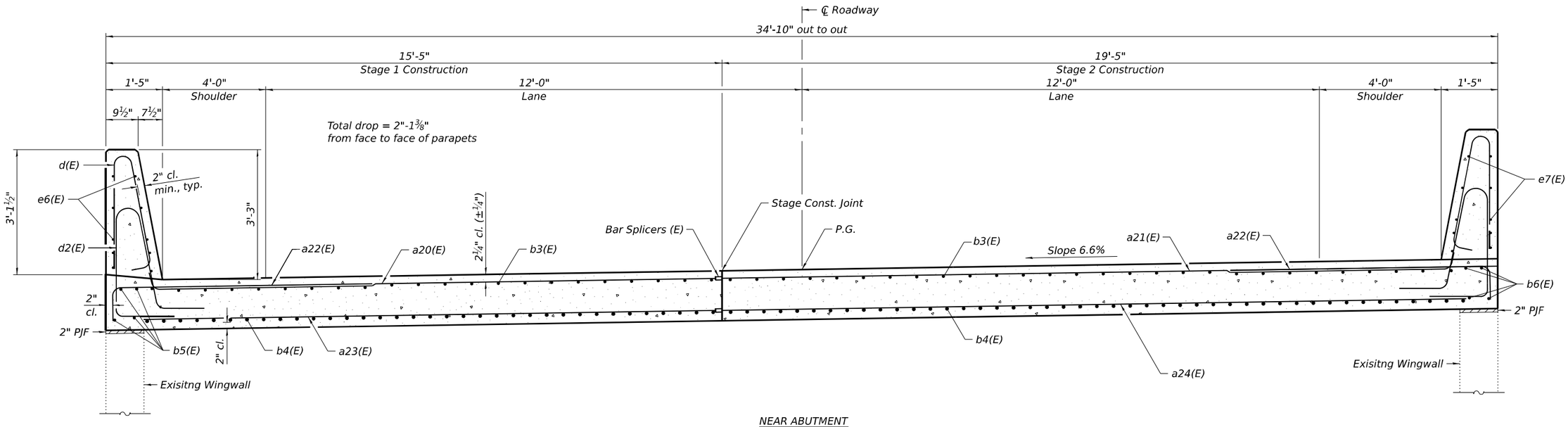

NEAR ABUTMENT

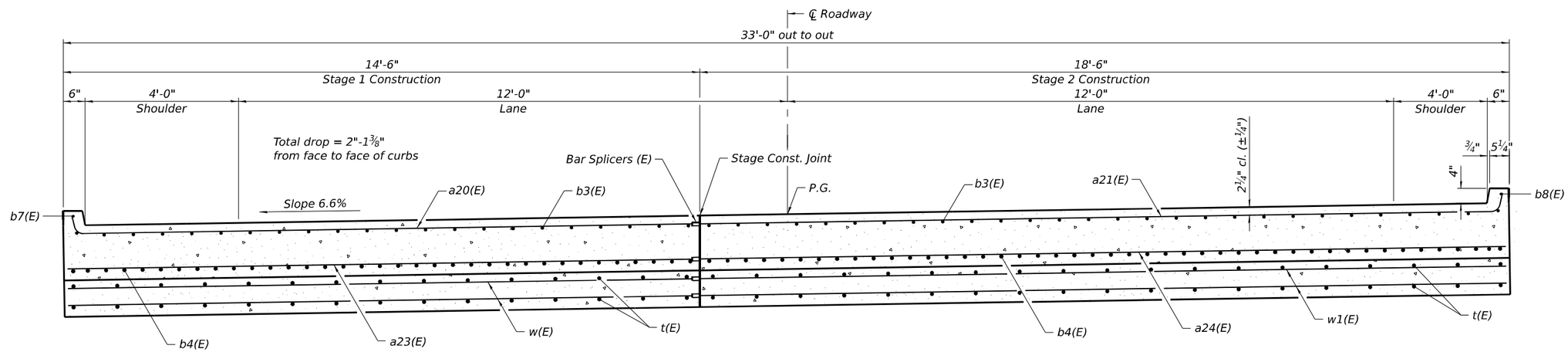

AT APPROACH FOOTING

CROSS SECTION

(Looking East)

FILE NAME: H:\P0222101 - D3 V-VWO 12 - IL 72 over Owens Creek\Bridge\Microstation\0190030-66K63-021-Bridge Approach Slab Details - West.dgn

OATES ASSOCIATES www.oatesassociates.com ILLINOIS DESIGN FIRM LICENSE NO.: 184.001115	USER NAME =	DESIGNED - BAW	REVISED -	STATE OF ILLINOIS DEPARTMENT OF TRANSPORTATION	WEST BRIDGE APPROACH SLAB CROSS SECTION STRUCTURE NO. 019-0030	F.A.P. RTE.	SECTION	COUNTY	TOTAL SHEETS / SHEET NO.
		CHECKED - KP	REVISED -			553	(125BR)ES	DEKALB	96 / 60
	PLOT SCALE =	DRAWN - BAW	REVISED -					CONTRACT NO. 66K63	
	PLOT DATE = 4/10/2025	CHECKED - KP	REVISED -		SHEET 21 OF 42 SHEETS		ILLINOIS	FED. AID PROJECT	

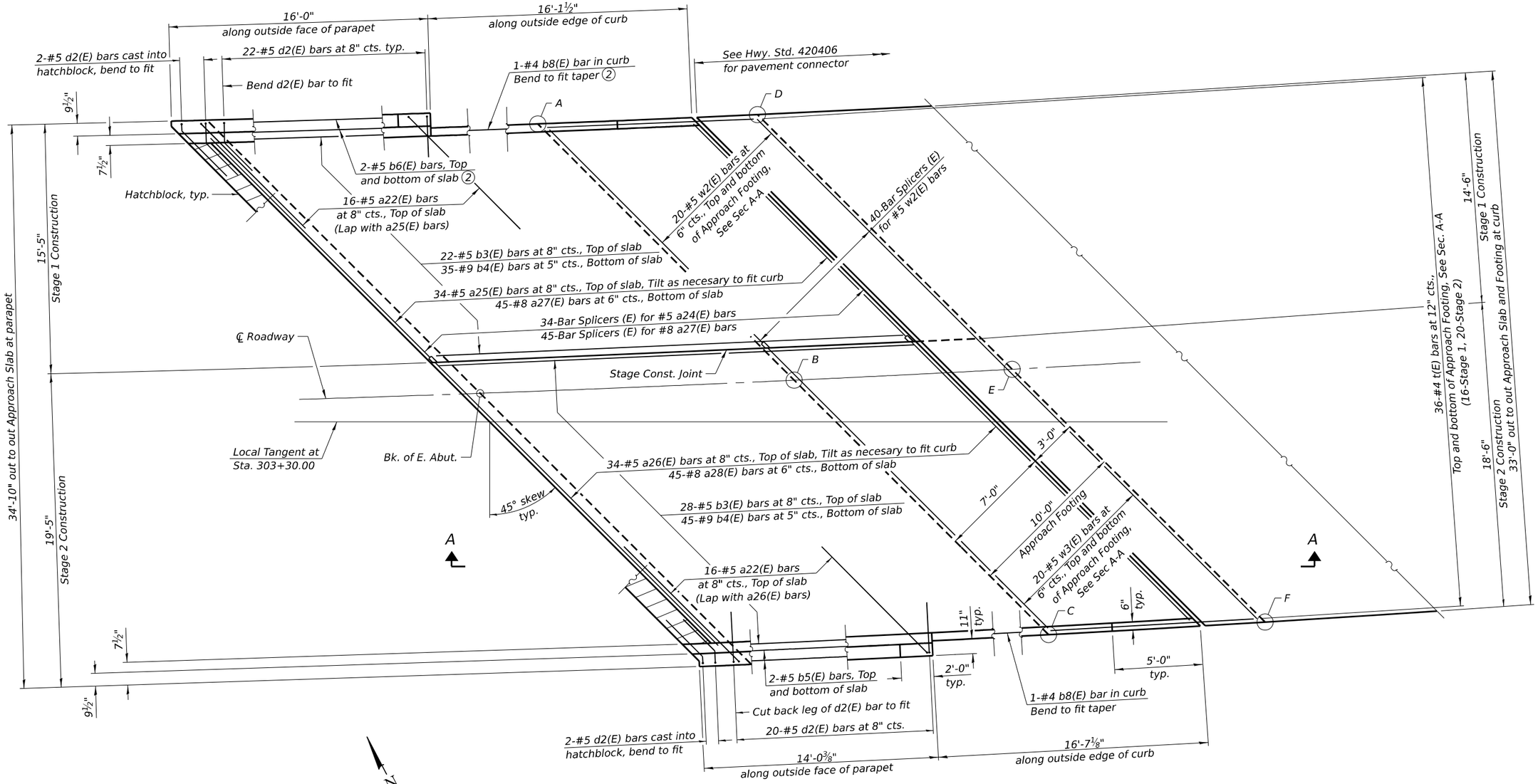

PLAN

TOP AND BOTTOM ELEVATIONS FOR APPROACH FOOTING

East Approach		
Point/ Location	Top	Bottom
A -	766.36	765.53
B -	767.52	766.69
C -	768.69	767.86
D -	766.43	768.6
E -	767.59	766.76
F -	768.75	767.92

Notes:
1. For Section A-A, see sheet 24 of 42.
2. Trim bars as needed to fit.
3. All transverse dimensions are radial unless otherwise noted.

FILE NAME: H:\P022101 - D3 V-VWO 12 - IL 72 over Owens Creek\Bridge\Microstation\019O030-66K63-022-Bridge Approach Slab Details - East.dgn

OATES ASSOCIATES
www.oatesassociates.com
ILLINOIS DESIGN FIRM LICENSE NO.: 184.001115

USER NAME =	DESIGNED - BAW	REVISED -	
	CHECKED - KP	REVISED -	
PLOT SCALE =	DRAWN - BAW	REVISED -	
PLOT DATE = 4/10/2025	CHECKED - KP	REVISED -	

STATE OF ILLINOIS
DEPARTMENT OF TRANSPORTATION

EAST BRIDGE APPROACH SLAB PLAN
STRUCTURE NO. 019-0030

SHEET 22 OF 42 SHEETS

F.A.P. RTE.	SECTION	COUNTY	TOTAL SHEETS	SHEET NO.
553	(125BR)ES	DEKALB	96	61

CONTRACT NO. 66K63

ILLINOIS | FED. AID PROJECT

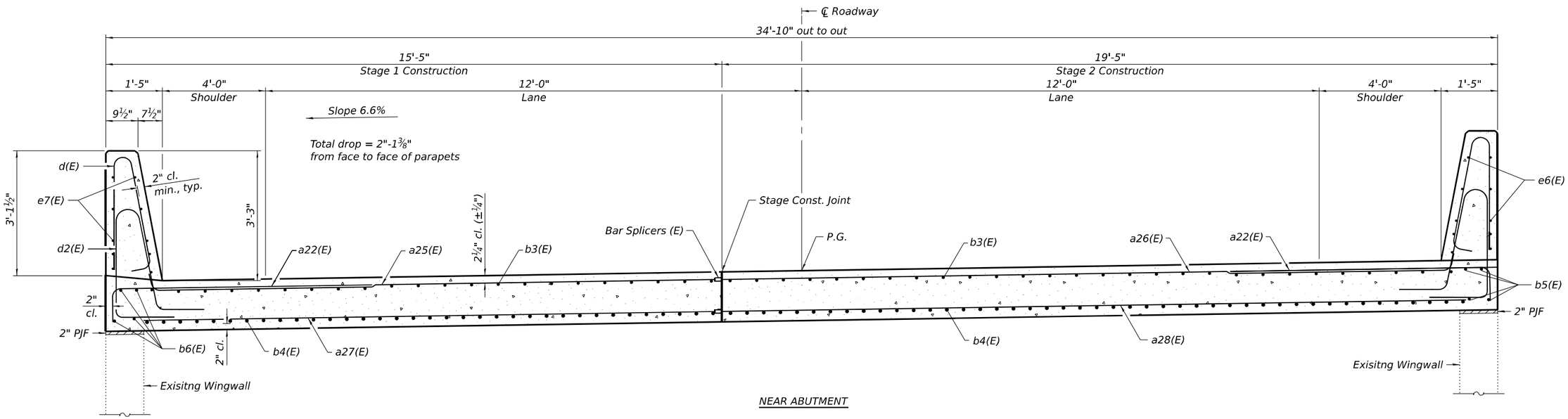

NEAR ABUTMENT

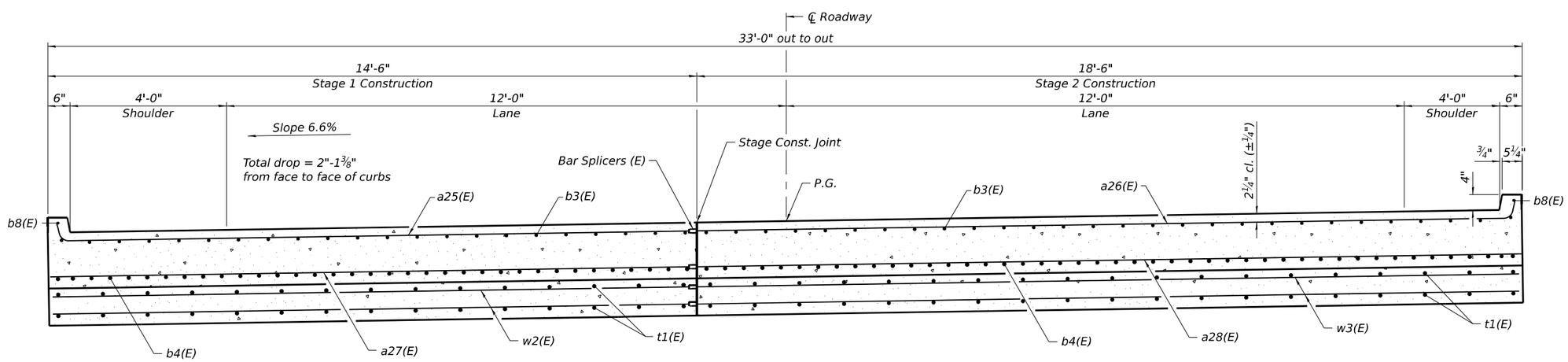

AT APPROACH FOOTING

CROSS SECTION

(Looking East)

FILE NAME: H:\P222101 - D3 V-VWO 12 - IL 72 over Owens Creek\Bridge\Microstation\0190030-66K63-023-Bridge Approach Slab Details - East.dgn

OATES ASSOCIATES
www.oatesassociates.com
ILLINOIS DESIGN FIRM LICENSE NO.: 184.001115

USER NAME =	DESIGNED - BAW	REVISED -	
	CHECKED - KP	REVISED -	
PLOT SCALE =	DRAWN - BAW	REVISED -	
PLOT DATE = 4/10/2025	CHECKED - KP	REVISED -	

STATE OF ILLINOIS
DEPARTMENT OF TRANSPORTATION

EAST BRIDGE APPROACH SLAB CROSS SECTION
STRUCTURE NO. 019-0030

SHEET 23 OF 42 SHEETS

F.A.P. RTE.	SECTION	COUNTY	TOTAL SHEETS	SHEET NO.
553	(125BR)ES	DEKALB	96	62
		CONTRACT NO. 66K63		
	ILLINOIS	FED. AID PROJECT		

Notes:
1. Parapet concrete shall be paid for as Concrete Superstructure.
2. Approach slab shall be paid for as Concrete Superstructure (Approach Slab).
3. Approach footing concrete shall be paid for as Concrete Structures.
4. The approach footing maximum applied service bearing pressure (Qmax) = 2.0 ksf.
5. Cost of excavation for approach footing included with Concrete Structures.
6. For Granular Backfill for Structures and drainage treatment details, see sheet 2 of 42.
7. Cost included with Concrete Superstructure (Approach Slab).

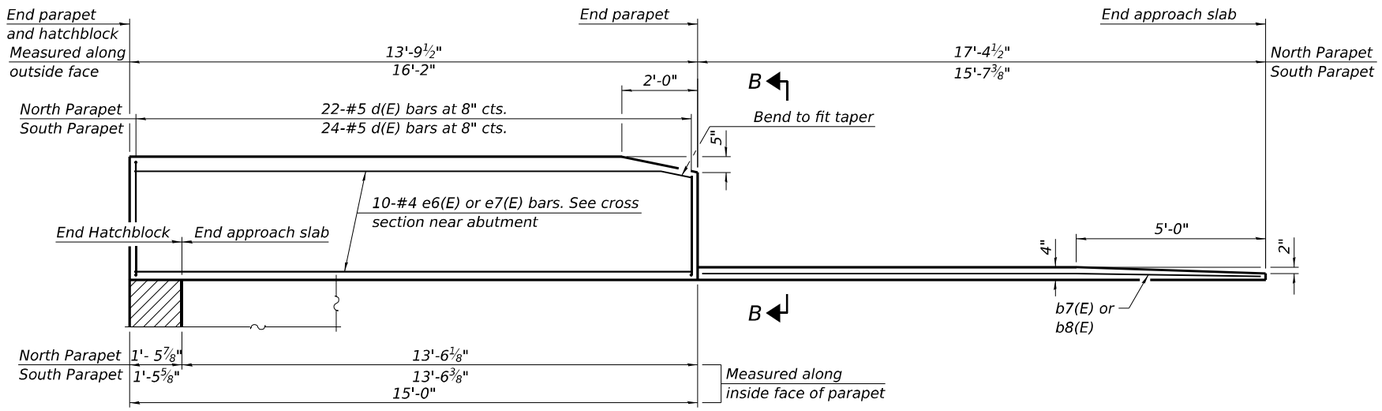

INSIDE ELEVATION OF WEST PARAPETS AND CURBS

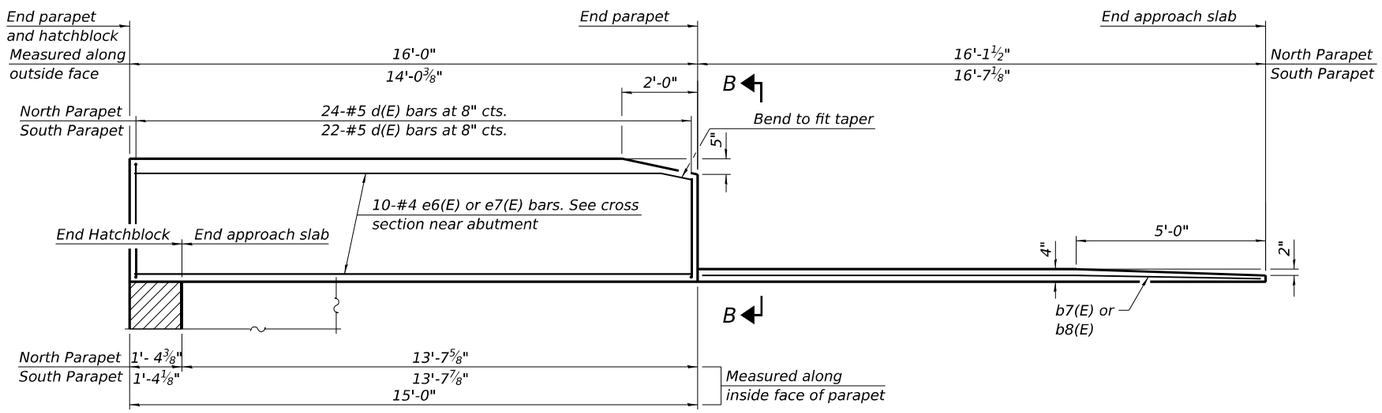

INSIDE ELEVATION OF EAST PARAPETS AND CURBS

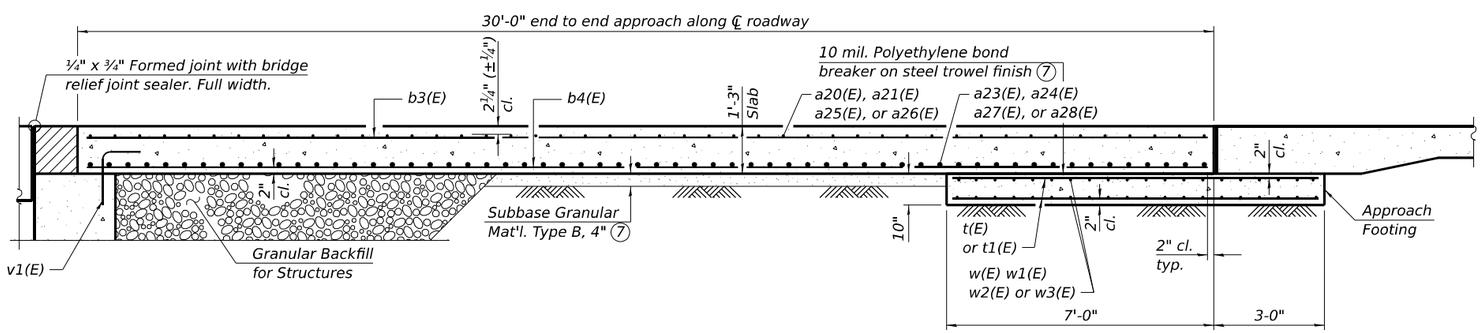

SECTION A-A

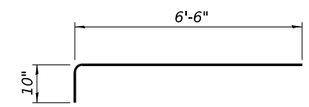

BAR a22(E)

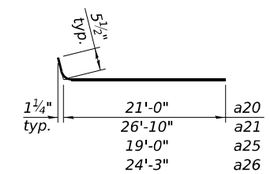

BARS a20(E), a21(E) a25(E) and a26(E)

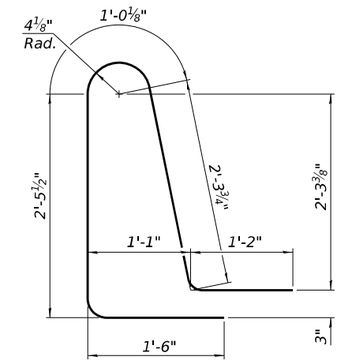

BAR d2(E)

BAR d(E)

TWO APPROACHES
BILL OF MATERIAL

Bar	No.	Size	Length	Shape
a20(E)	31	#5	21'-6"	
a21(E)	31	#5	27'-4"	
a22(E)	61	#5	7'-4"	
a23(E)	41	#8	21'-5"	
a24(E)	41	#8	27'-2"	
a25(E)	34	#5	19'-6"	
a26(E)	34	#5	24'-9"	
a27(E)	45	#8	19'-4"	
a28(E)	45	#8	24'-7"	
b3(E)	100	#5	29'-8"	
b4E)	160	#9	29'-8"	
b5(E)	8	#5	14'-8"	
b6(E)	8	#5	15'-8"	
b7(E)	1	#4	17'-0"	
b8(E)	3	#4	16'-3"	
d(E)	92	#5	6'-5"	
d2(E)	92	#5	8'-6"	
e6(E)	20	#4	14'-8"	
e7(E)	20	#4	15'-8"	
t(E)	68	#4	14'-8"	
t1(E)	68	#4	13'-0"	
w(E)	40	#5	21'-6"	
w1(E)	40	#5	27'-3"	
w2(E)	40	#5	19'-1"	
w3(E)	40	#5	24'-4"	
Concrete Superstructure		Cu. Yd.	7.8	
Concrete Superstructure (Approach Slab)		Cu. Yd.	98.9	
Concrete Structures		Cu. Yd.	29.0	
Reinforcement Bars, Epoxy Coated		Pound	40,700	

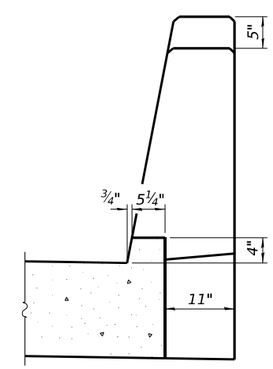

VIEW B-B

FILE NAME: H:\P222101 - D3 V-V\WO 12 - IL 72 over Owens Creek\Bridge\Microstation\0190030-66K63-024-Bridge Approach Slab Details.dgn

OATES ASSOCIATES
www.oatesassociates.com
ILLINOIS DESIGN FIRM LICENSE NO.: 184.001115

USER NAME =	DESIGNED - BAW	REVISED -	
	CHECKED - KP	REVISED -	
PLOT SCALE =	DRAWN - BAW	REVISED -	
PLOT DATE = 4/10/2025	CHECKED - KP	REVISED -	

STATE OF ILLINOIS
DEPARTMENT OF TRANSPORTATION

BRIDGE APPROACH SLAB DETAILS
STRUCTURE NO. 019-0030

SHEET 24 OF 42 SHEETS

F.A.P. RTE.	SECTION	COUNTY	TOTAL SHEETS	SHEET NO.
553	(125BR)ES	DEKALB	96	63
		CONTRACT NO. 66K63		
		ILLINOIS	FED. AID PROJECT	

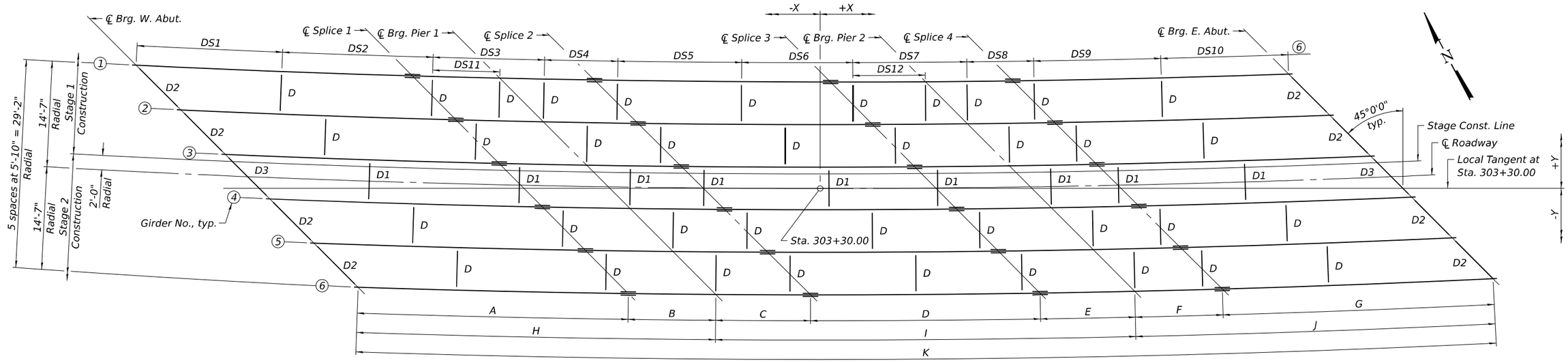

FRAMING PLAN

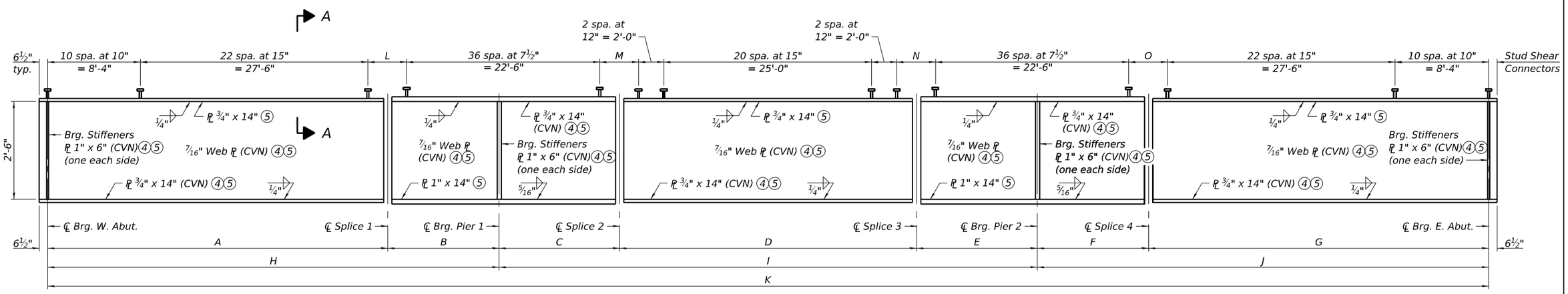

GIRDER ELEVATION

LAYOUT DIMENSION

Girder	℄ Brg. W. Abut.		℄ Splice 1		℄ Pier 1		℄ Spice 2		℄ Splice 3		℄ Pier 2		℄ Splice 4		℄ Brg. E. Abut.	
	X	Y	X	Y	X	Y	X	Y	X	Y	X	Y	X	Y	X	Y
1	-93'-8¾"	16'-10 13/16"	-55'-9⅞"	15'-4⅞"	-43'-9 15/16"	15'-1 1/16"	-30'-9 15/16"	14'-10"	1'-6 7/16"	14'-7"	14'-6 7/16"	14'-7 11/16"	26'-6 7/16"	14'-9¼"	64'-4 7/16"	13'-8⅛"
2	-87'-7⅛"	10'-9¼"	-49'-10 5/16"	9'-4⅞"	-37'-10⅜"	9'-1½"	-24'-10⅜"	8'-10 15/16"	7'-3 13/16"	8'-9 3/16"	20'-3 13/16"	8'-10 5/16"	32'-3 13/16"	9'-0 5/16"	70'-0⅛"	10'-0½"
3	-81'-5 13/16"	4'-7⅞"	-43'-11"	3'-5 1/16"	-31'-11 1/16"	3'-2 3/16"	-18'-11 1/16"	3'-0⅛"	13'-1"	2'-11 9/16"	26'-1"	3'-1⅛"	38'-0 15/16"	3'-3 9/16"	75'-7 9/16"	4'-5"
4	-75'-4¾"	-1'-5 3/16"	-37'-11 15/16"	-2'-6½"	-26'-0"	-2'-8⅞"	-13'-0"	-2'-10½"	18'-9 15/16"	-2'-9⅞"	31'-9 15/16"	-2'-7 13/16"	43'-9 15/16"	-2'-4⅞"	81'-2⅞"	-1'-2 5/16"
5	-69'-3 15/16"	-7'-5 15/16"	-32'-1⅛"	-8'-5¾"	-20'-1⅛"	-8'-7¾"	-7'-1⅛"	-8'-8 13/16"	24'-6¾"	-8'-7⅛"	37'-6 11/16"	-8'-4 9/16"	49'-6 11/16"	-8'-1 5/16"	86'-10"	-6'-9 7/16"
6	-63'-3⅜"	-13'-6½"	-26'-2½"	-14'-4⅞"	-14'-2½"	-14'-6⅜"	-1'-2½"	-14'-7"	30'-3 5/16"	-14'-4⅛"	43'-3 5/16"	-14'-1 3/16"	55'-3¼"	-13'-9½"	92'-4 15/16"	-12'-4⅜"

GIRDER DIMENSIONS

Girder	Radius	A	B	C	D	E	F	G	H	I	J	K	L	M	N	O
1	1,895.50'	37'-11 3/16"	12'-0"	13'-0"	32'-4 7/16"	13'-0"	12'-0"	37'-10⅛"	49'-11 3/16"	58'-4 7/16"	49'-10⅛"	158'-1 13/16"	3'-4 3/16"	2'-11¼"	2'-11¼"	3'-3⅛"
2	1,901.33'	37'-9 1/16"	12'-0"	13'-0"	32'-2¼"	13'-0"	12'-0"	37'-8 7/16"	49'-9 1/16"	58'-2¼"	49'-8 7/16"	157'-7 13/16"	3'-2 1/16"	2'-10⅛"	2'-10⅛"	3'-1 7/16"
3	1,907.16'	37'-7"	12'-0"	13'-0"	32'-0 1/16"	13'-0"	12'-0"	37'-6 13/16"	49'-7"	58'-0 1/16"	49'-6 13/16"	157'-1⅞"	3'-0"	2'-9"	2'-9"	2'-11 13/16"
4	1,913.00'	37'-5	12'-0"	13'-0"	31'-9 15/16"	13'-0"	12'-0"	37'-5 3/16"	49'-5"	57'-9 15/16"	49'-5 3/16"	156'-8⅛"	2'-10"	2'-8"	2'-8"	2'-10 3/16"
5	1,918.83'	37'-3"	12'-0"	13'-0"	31'-7⅞"	13'-0"	12'-0"	37'-3⅝"	49'-3"	57'-7⅞"	49'-3⅝"	156'-2 7/16"	2'-8"	2'-6 15/16"	2'-6 15/16"	2'-8⅝"
6	1,924.66'	37'-1 1/16"	12'-0"	13'-0"	31'-5 13/16"	13'-0"	12'-0"	37'-2 1/16"	49'-1 1/16"	57'-5 13/16"	49'-2 1/16"	155'-8⅞"	2'-6 1/16"	2'-5⅞"	2'-5 15/16"	2'-7 1/16"

TOP OF WEB ELEVATIONS ⑦⑧

	Girder 1	Girder 2	Girder 3	Girder 4	Girder 5	Girder 6
℄ Brg. W. Abut.	765.64	766.09	766.53	766.97	767.41	767.85
℄ Splice 1	765.95	766.39	766.82	767.26	767.69	768.12
℄ Pier 1	766.05	766.48	766.92	767.35	767.78	768.21
℄ Splice 2	766.16	766.59	767.02	767.45	767.87	768.31
℄ Splice 3	766.40	766.82	767.24	767.66	768.08	768.51
℄ Pier 2	766.48	766.90	767.32	767.74	768.16	768.58
℄ Splice 4	766.57	766.98	767.40	767.82	768.23	768.66
℄ Brg. E. Abut.	766.81	767.22	767.63	768.05	768.46	768.87

Notes:

① For fabrication only.

② Girder dimensions, diaphragm spacing, and shear stud spacing are taken along centerline of each individual girder.

③ All diaphragms between girders shall be installed with erection pins and bolts in accordance with the erection plan approved by the Engineer. Individual diaphragms at supports may be temporarily disconnected to install bearing anchor bolts.

④ "CVN" denotes Charpy-V-Notch impact energy requirements, zone 2.

⑤ AASHTO M 270 Grade 50 Steel.

⑥ For diaphragm spacing, see sheet 26 of 42.

⑦ For diaphragm and splices details, and Section A-A, see sheet 27 of 42.

⑧ Girder webs are not to be cambered.

FILE NAME: H:\P0222101 - D3 V-VIWO 12 - IL 72 over Owens Creek\Bridge\Microstation\0190030-68K63-025-Framing Plan.dgn

OATES ASSOCIATES
www.oatesassociates.com
ILLINOIS DESIGN FIRM LICENSE NO.: 184.001115

USER NAME =	DESIGNED - ETH	REVISED -	
	CHECKED - ORG	REVISED -	
PLOT SCALE =	DRAWN - ETH	REVISED -	
PLOT DATE = 4/10/2025	CHECKED - ORG	REVISED -	

STATE OF ILLINOIS
DEPARTMENT OF TRANSPORTATION

FRAMING PLAN
STRUCTURE NO. 019-0030

SHEET 25 OF 42 SHEETS

F.A.P. RTE.	SECTION	COUNTY	TOTAL SHEETS	SHEET NO.
553	(125BR)ES	DEKALB	96	64

CONTRACT NO. 66K63

ILLINOIS | FED. AID PROJECT

INTERIOR GIRDER MOMENT TABLE						
		0.4 Sp. 1	Pier 1	0.5 Sp. 2	Pier 2	0.6 Sp. 3
I_s	(in^4)	5,950	6,750	5,950	6,750	5,950
I_c (n)	(in^4)	16,305	19,382	16,305	19,382	16,305
I_c (3n)	(in^4)	12,270	14,295	12,270	14,295	12,270
I_c (cr)	(in^4)	——	9,260	——	9,260	——
S_s	(in^3)	378	465	378	465	378
S_c (n)	(in^3)	544	661	544	661	544
S_c (3n)	(in^3)	499	608	499	608	499
S_c (cr)	(in^3)	——	526	——	526	——
S_x	(in^3)	——	——	——	——	——
DC1	(k/ft)	0.740	0.754	0.740	0.754	0.740
M_{DC1}	('k)	131.9	225.3	91.6	224.7	131.3
DC2	(k/ft)	0.175	0.175	0.175	0.175	0.175
M_{DC2}	('k)	31.0	53.3	21.3	53.2	30.9
DW	(k/ft)	0.267	0.267	0.267	0.267	0.267
M_{DW}	('k)	47.3	81.4	32.4	81.2	47.1
LLDF		0.540	0.540	0.540	0.540	0.540
M_{LL+IM}	('k)	507.0	563.3	479.1	562.7	505.8
f_f (Strength I)	(ksi)	7.50	11.92	6.65	11.92	7.49
$M_u + \frac{1}{3} f_f S_x$	('k)	——	——	——	——	——
$\Phi_f M_n$	('k)	——	——	——	——	——
f_s DC1	(ksi)	4.19	5.82	2.91	5.80	4.17
f_s DC2	(ksi)	0.75	1.05	0.51	1.05	0.74
f_s DW	(ksi)	1.14	1.61	0.78	1.60	1.13
f_s (LL+IM)	(ksi)	11.18	10.23	10.57	10.22	11.16
f_f (Service II)	(ksi)	5.61	7.80	4.97	7.80	5.60
$f_s + \frac{f_f}{2}$ (Service II)	(ksi)	23.42	25.68	20.43	25.64	23.35
Service II Resistance	(ksi)	47.50	47.50	47.50	47.50	47.50
$f_s + \frac{f_f}{3}$ (Strength I)	(ksi)	29.95	38.05	26.16	37.98	29.86
$\Phi_f F_n$	(ksi)	50.00	44.54	50.00	44.54	50.00
V_f	(k)	26.49	30.63	22.64	30.67	26.48

GIRDER REACTION TABLE					
		W. Abut.	Pier 1	Pier 2	E. Abut.
LLDF		0.658	0.658	0.658	0.658
OCF		1.249	1.261	1.261	1.249
R_{DC1}	(k)	14.0	45.0	44.9	14.0
R_{DC2}	(k)	3.3	10.5	10.5	3.3
R_{DW}	(k)	5.1	16.1	16.1	5.0
R_{LL}	(k)	66.1	122.6	122.6	66.1
R_{Im}	(k)	17.3	27.5	27.5	17.3
R_{Total} (Strength I)(Impact)	(k)	175.3	356.2	356.1	175.1
R_{Total} (Strength I)(No Impact)	(k)	145.0	308.1	308.0	144.8

I_s , S_s : Non-composite moment of inertia and section modulus of the steel section used for computing f_s (Total-Strength I, and Service II) due to non-composite dead loads (in.⁴ and in.³).

I_c (n), S_c (n): Composite moment of inertia and section modulus of the steel and deck based upon the modular ratio, "n", used for computing f_s (Total-Strength I, and Service II) in uncracked sections due to short-term composite live loads (in.⁴ and in.³).

I_c (3n), S_c (3n): Composite moment of inertia and section modulus of the steel and deck based upon 3 times the modular ratio, "3n", used for computing f_s (Total-Strength I, and Service II) in uncracked sections, due to long-term composite (superimposed) dead loads (in.⁴ and in.³).

I_c (cr), S_c (cr): Composite moment of inertia and section modulus of the steel and longitudinal deck reinforcement, used for computing f_s (Total-Strength I and Service II) in cracked sections, due to both short-term composite live loads and long-term composite (superimposed) dead loads (in.⁴ and in.³).

S_x : Section modulus about the major axis of a section to the controlling flange, tension or compression, taken as yield moment with respect to the controlling flange over the yield strength of the controlling flange (in.³).

DC1: Un-factored non-composite dead load (kips/ft.).

M_{DC1}: Un-factored moment due to non-composite dead load (kip-ft.).

DC2: Un-factored long-term composite (superimposed excluding future wearing surface) dead load (kips/ft.).

M_{DC2}: Un-factored moment due to long-term composite (superimposed excluding future wearing surface) dead load (kip-ft.).

DW: Un-factored long-term composite (superimposed future wearing surface only) dead load (kips/ft.).

M_{DW} : Un-factored moment due to long-term composite (superimposed future wearing surface only) dead load (kip-ft.).

LLDF: Live Load Distribution Factor for moment and shear computed according to Article 4.6.2.2 and further IDOT provisions.

② M_{LL+IM}: Un-factored live load moment plus dynamic load allowance (impact) (kip-ft.).

M_u : Strength I load combination of factored design moments (kip-ft.).
$1.25 (M_{DC1} + M_{DC2}) + 1.5 M_{DW} + 1.75 M_{LL+IM}$

f_f : Factored calculated flange lateral bending stress as calculated using Article 6.10.1.6 and as further simplified by IDOT provisions (ksi).

$\Phi_f M_n$: Factored nominal flexural resistance of the section determined as specified in Article 6.10.7.1 or A6 as applicable (kip-ft.).

f_s DC1: Un-factored stress at edge of flange for controlling steel flange due to vertical non-composite dead loads as calculated below (ksi).
M_{DC1} / S_s

f_s DC2: Un-factored stress at edge of flange for controlling steel flange due to vertical composite dead loads as calculated below (ksi).
M_{DC2} / S_c (3n) or M_{DC2} / S_c (cr) as applicable.

f_s DW: Un-factored stress at edge of flange for controlling steel flange due to vertical composite future wearing surface loads as calculated below (ksi).
M_{DW} / S_c (3n) or M_{DW} / S_c (cr) as applicable.

f_s (LL+IM): Un-factored stress at edge of flange for controlling steel flange due to vertical composite live load plus impact loads as calculated below (ksi).
M_{LL+IM} / S_c (n) or M_{LL+IM} / S_c (cr) as applicable.

$f_s + f_f / 2$ (Service II): Sum of stresses as computed below (ksi).
f_s DC1 + f_s DC2 + f_s DW + 1.3 f_s (LL+IM) + f_f /2

Service II Resistance: Composite ($0.95R_hF_{yf}$) or noncomposite ($0.80R_hF_{yf}$) stress capacity according to Article 6.10.4.2 (ksi).

$f_s + f_f / 3$ (Strength I): Sum of stresses as computed below on non-compact sections (ksi).
1.25 (f_s DC1 + f_s DC2) + 1.5 f_s DW + 1.75 f_s (LL+IM) + f_f /3

$\Phi_f F_n$: Factored nominal flexural resistance of the section as specified in Article 6.10.7.2 or 6.10.8 as applicable (ksi).

V_f: Maximum factored shear range in span computed according to Article 6.10.10.

OCF: Obtuse Correction Factor according to Article 4.6.2.2.3c or as further simplified by IDOT provisions.

R_{DC1}: Un-factored reaction due to non-composite dead load (kip).

R_{DC2}: Un-factored reaction due to long-term composite (superimposed excluding future wearing surface) dead load (kip).

R_{DW} : Un-factored reaction due to long-term composite (superimposed future wearing surface only) dead load (kip).

② R_{LL} : Un-factored live load reaction (kip).

R_{IM} : Un-factored dynamic load allowance (impact) (kip).

R_{Total} (Strength I)(Impact): Strength I load combination of factored design reactions (kip).
$1.25 (R_{DC1} + R_{DC2}) + 1.5R_{DW} + 1.75 (R_{LL} + R_{IM})$

R_{Total} (Strength I)(No Impact): Strength I load combination of factored design reactions, not including dynamic load allowance (Impact) (kip).
$1.25 (R_{DC1} + R_{DC2}) + 1.5R_{DW} + 1.75 (R_{LL})$

DIAPHRAGM SPACING ①

GIRDER	LOCATION	DS1	DS2	DS3	DS4	DS5	DS6	DS7	DS8	DS9	DS10	DS11	DS12
1	South Face	20'-5 5/8"	20'-5 5/8"	15'-0 15/16"	9'11 1/16"	16'-2 3/16"	16'-2 3/16"	15'-8 5/8"	9'-3 3/8"	17'-5 1/16"	17'-5 1/16"	9'-0"	10'-0"
2	North Face	14'-1 3/16"	20'-6 3/8"	15'-1 1/2"	9'-11 3/8"	16'-2 13/16"	16'-2 13/16"	15'-9 3/16"	9'-3 3/4"	17'-5 11/16"	22'-11"	9'-0 5/16"	10'-0 3/8"
2	South Face	20'-4 7/16"	20'-4 7/16"	15'-0 3/4"	9'-11 1/2"	16'-1 1/8"	16'-1 1/8"	15'-8 3/16"	9'-3 13/16"	17'-4 1/4"	17'-4 1/4"	-	-
3	North Face	14'-0 9/16"	20'-5 3/16"	15'-1 1/4"	9'-11 7/8"	16'-1 11/16"	16'-1 11/16"	15'-8 13/16"	9'-4 1/8"	17'-4 7/8"	22'-9 13/16"	-	-
3	South Face	20'-3 1/2"	20'-3 1/2"	15'-0 1/16"	9'-11 7/8"	16'-0 1/16"	16'-0 1/16"	15'-7 13/16"	9'-4 3/16"	17'-3 7/16"	17'-3 7/16"	-	-
4	North Face	14'-0 1/8	20'-4 1/4"	15'-0 5/8"	10'-0 5/16"	16'-0 5/8"	16'-0 5/8"	15'-8 3/8"	9'-4 9/16"	17'-4 1/16"	22'-8 5/8"	-	-
4	South Face	20'-2 1/2"	20'-2 1/2"	14'-11 5/8"	10'-0 3/8"	15'-11"	15'-11"	15'-7 7/16"	9'-4 9/16"	17'-2 5/8"	17'-2 5/8"	-	-
5	North Face	13'-11 5/8"	20'-3 1/4"	15'-0 1/8"	10'-0 3/4"	15'-11 9/16"	15'-11 9/16"	15'-8"	9'-4 15/16"	17'-3 1/4"	22'-7 7/16"	-	-
5	South Face	20'-1 1/2"	20'-1 1/2"	14'-11 1/8"	10'-0 7/8"	15'-9 15/16"	15'-9 15/16"	15'-7"	9'-5"	17'-1 13/16"	17'-1 13/16"	-	-
6	North Face	13'-11 1/8"	20'-2 1/4"	14'-11 11/16"	10'-1 3/16"	15'-10 1/2"	15'-10 1/2"	15'-7 9/16"	9'-5 5/16"	17'-2 7/16"	22'-6 1/4"	-	-

Notes
① Diaphragm spacing is taken along centerline of each individual girder.
② M_{LL} and R_{LL} include the effects of centrifugal force and superelevation.

FILE NAME: H:\P222101 - D3 V-V\WO 12 - IL 72 over Owens Creek\Bridge\Microstation\019\0030-66K63-026-Girder Details.dgn

OATES ASSOCIATES
www.oatesassociates.com
ILLINOIS DESIGN FIRM LICENSE NO.: 184.001115

USER NAME =	DESIGNED - ETH	REVISED -	
	CHECKED - ORG	REVISED -	
PLOT SCALE =	DRAWN - ETH	REVISED -	
PLOT DATE = 4/10/2025	CHECKED - ORG	REVISED -	

STATE OF ILLINOIS
DEPARTMENT OF TRANSPORTATION

GIRDER DETAILS
STRUCTURE NO. 019-0030

SHEET 26 OF 42 SHEETS

F.A.P. RTE.	SECTION	COUNTY	TOTAL SHEETS	SHEET NO.
553	(125BR)ES	DEKALB	96	65
		CONTRACT NO. 66K63		
		ILLINOIS	FED. AID PROJECT	

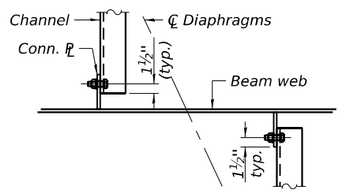

DETAIL A

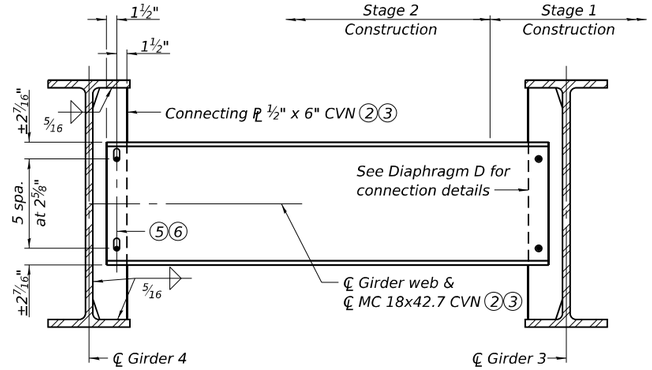

DIAPHRAGM D1
(Showing final position)
(9 Required)

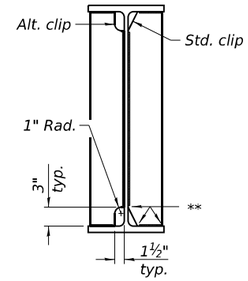

WELD LIMITS AND CLIP DETAILS

** Stop welds ¼" (±⅛") from edges as shown. Typical.

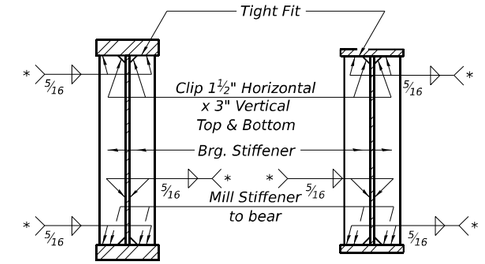

* Terminate ¼" (±⅛") from the end of plate intersects.

BEARING STIFFENER DETAILS

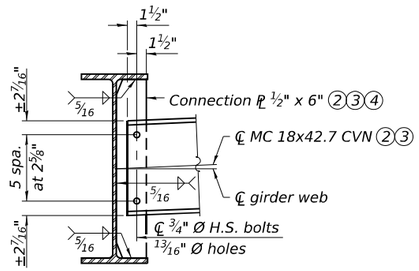

INTERIOR DIAPHRAGM D
(38 Required)

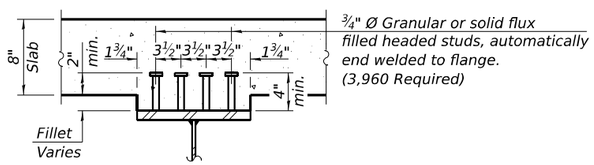

SECTION A-A

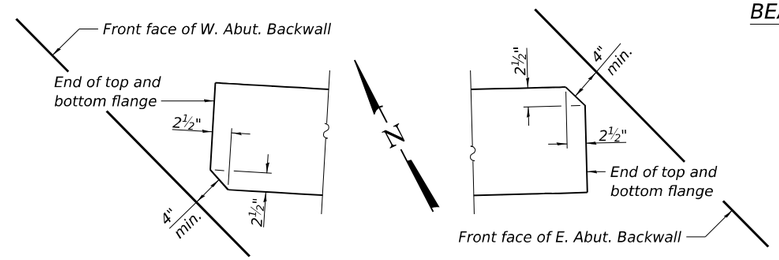

TOP & BOTTOM FLANGE CLIPPING DETAILS
(All Girders)

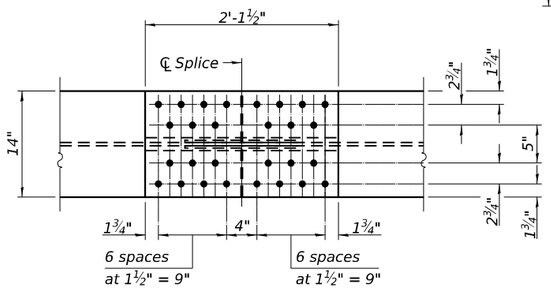

TOP & BOTTOM PLAN

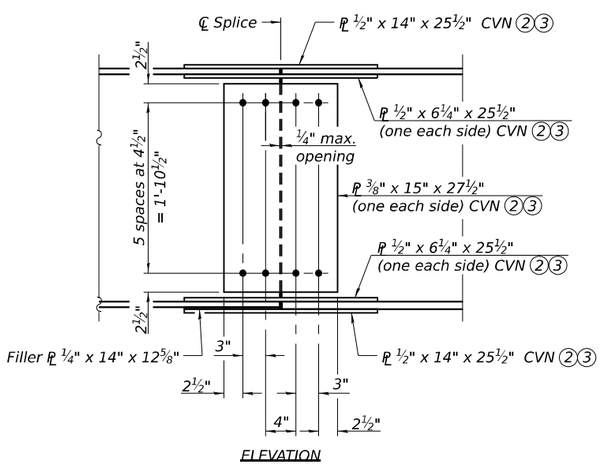

ELEVATION

SPLICE DETAIL
(24 Required)

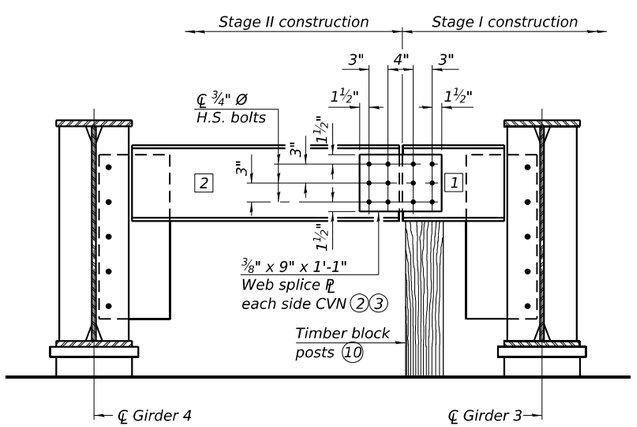

END DIAPHRAGM D3
(2 Required)

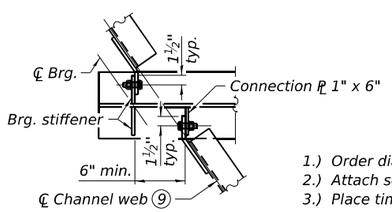

DETAIL B

END DIAPHRAGM STAGE CONSTRUCTION SEQUENCE

1.) Order diaphragm in two sections.
2.) Attach section 1 of diaphragm to Girder 3 .
3.) Place timber block posts between section 1 of diaphragm and abutment bearing section.
4.) Attach section 2 of diaphragm to both girder 4 and section 1 of diaphragm during stage II construction with splice plates.
5.) Remove timber block posts.

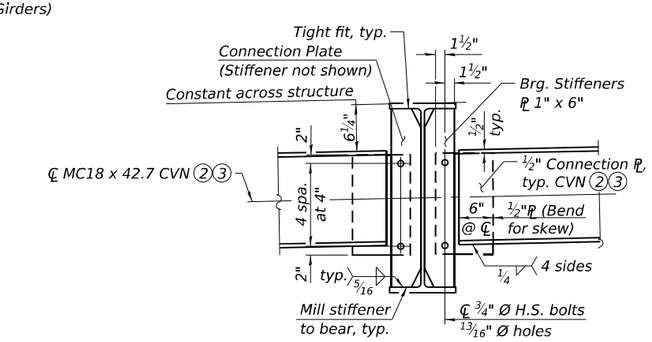

END DIAPHRAGMS D2
(8 Required)

Notes:

1. All Splices bolts shall be ⅞"∅ and bolt holes shall be 15/16"∅.
2. "CVN" denotes Charpy-V-Notch impact energy requirements, zone 2.
3. AASHTO M 270 Grade 50 Steel.
4. Do not provide connecting plate on exterior face of facia girders.
5. ℄ ¾"Ø H.S. bolts, 15/16"Ø holes in connection plate, and 13/16" x 1⅞" vertical slotted holes in channel. Two 5/16" structural plate washers required for each set of slotted holes.
6. The Fabricator shall detail slotted holes locations on channel to allow for differntial deflection during Stage 2 deck and parapet pour. The bolt shall be finger tight until the Stage 2 deck and parapet concrete is poured, allowing the Stage 2 girders to deflect vertically without stressing the diaphragm or Stage 1 girders. The diaphragm connection shall be detailed so that the centerline of girder web and centerline of diaphragm channel align in their final position.
7. Alternate channels of equal depth and larger weight are permitted to facilitate material aquisition. Alternate channels, if utilized, shall be provided at no additional cost to the Department.
8. Two hardened washers required for each set of oversized holes.
9. Clip channel as necessary for ease of installation of diaphragms on skews.
10. Cost of Timber Block Posts is included with Structural Steel.
11. See Sheet 28 and 29 of 42 for bearing connector hole details.

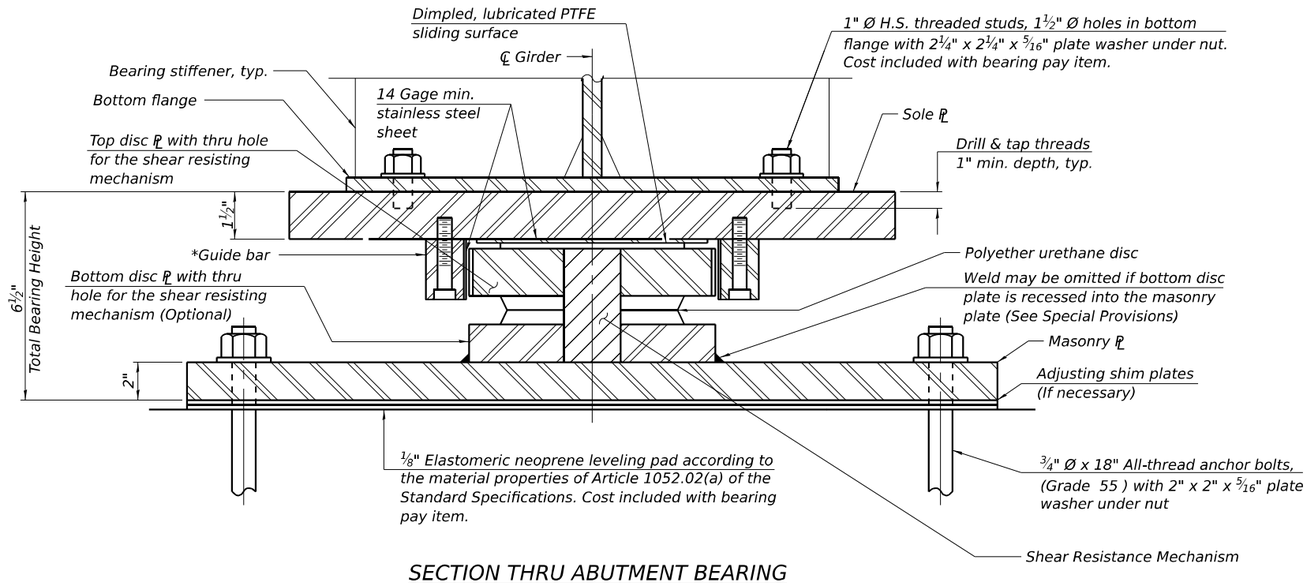

SECTION THRU ABUTMENT BEARING

*As alternates to the bolted connection shown, the guide bars may be connected to the sole plate by groove welds or the guide bars and sole plate may be fabricated as a single piece.

DESIGN DATA

Unfactored Vertical Dead Load Reaction (R_{DC})	17.3 kips
Unfactored Vertical Wearing Surface Reaction (R_{DW})	5.1 kips
Unfactored Vertical Live Load without Impact Reaction (R_{LL})	66.1 kips
Maximum Strength or Extreme Event Lateral Reaction (H_u)	17.7 kips
Maximum Strength Limit State Rotation (Θ_u according to Article 14.4.2.2)	0.0200 rad
Unfactored Design Thermal Movement from 50° F (ΔT)	0.87 in.
Service I Factored Lateral Reaction	8.8 kips
Service I Rotation	0.0050 rad
Strength I Factored Longitudinal Movement	1.04 in.
Service I Factored Vertical Reaction	88.5 kips
Strength I Factored Vertical Reaction	175.3 kips

Service I Load Factors = 1.0DC + 1.0DW + 1.00LL
Strength I Load Factors = 1.25DC + 1.5DW + 1.75LL + 1.2TU
Extreme Event Load Factors = 1.0EQ

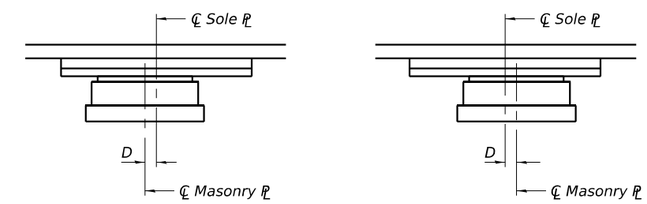

BELOW 50°F.
(Move masonry PL away from fixed bearing)

ABOVE 50°F.
(Move masonry PL toward fixed bearing)

SETTING ANCHOR BOLTS AT EXPANSION BEARING

D=⅛" per each 100' of expansion for every 15° temp. change from the normal temp. of 50° F.

NOTES:

1. Two ⅛ in. adjusting shims shall be provided for each bearing in addition to all other plates or shims and placed as shown on bearing details. Shim plates not included in total bearing height. Cost included with bearing pay item.
2. Total bearing height is estimated based on manufacturer data. Actual bearing height may differ from contract plans. The Contractor shall be responsible for verifying bearing heights and adjusting seat elevations, if required, prior to placing pier or abutment concrete.
3. All (embedded and separate) bearing plates, side retainers, anchor bolts, nuts, washers and pintles shall be galvanized according to AASHTO M111 or M232 as applicable.

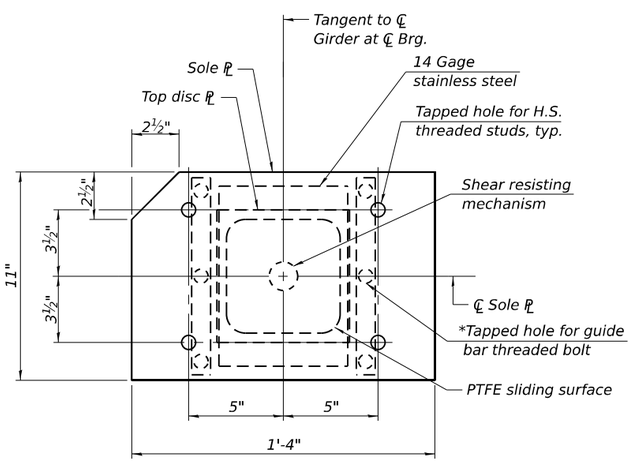

SOLE PLATE AND TOP DISC PLATE PLAN

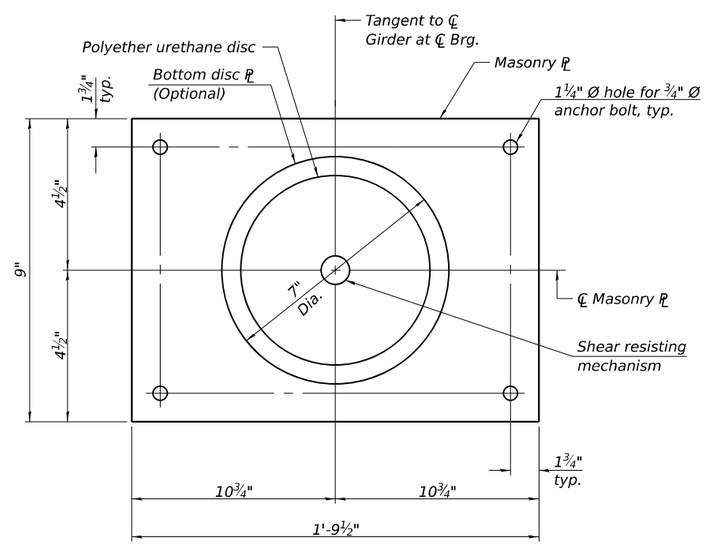

MASONRY PLATE AND BOTTOM DISC PLATE PLAN

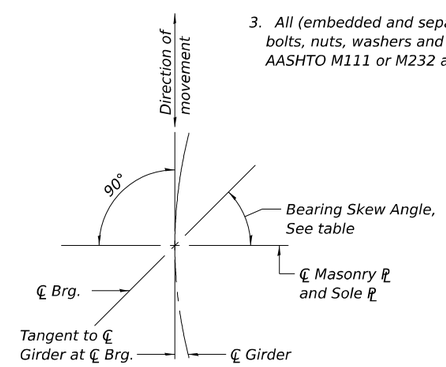

BEARING LAYOUT PLAN

BEARING SKEW ANGLE TABLE

Location	Girder No.	Bearing Skew Angle
W. Abut.	1	47°50'03"
W. Abut.	2	47°38'26"
W. Abut.	3	47°26'55"
W. Abut.	4	47°15'31"
W. Abut.	5	47°04'14"
W. Abut.	6	46°53'03"
E. Abut.	1	43°03'14"
E. Abut.	2	42°53'24"
E. Abut.	3	42°43'38"
E. Abut.	4	42°33'58"
E. Abut.	5	42°24'23"
E. Abut.	6	42°15'53"

BILL OF MATERIAL

	Item	Unit	Total
**	High Load Multi-Rotational Bearings, Disc, Guided Expansion-100k	Each	12
	Anchor Bolts, ¾"	Each	48

** The value specified in the pay item name is an approximate vertical load capacity that is used for letting and bidding purposes only. Exact bearing capacity will vary subject to final design.

HLMR-D-GE 5/15/2023

FILE NAME: H:\P222101 - D3 V-VWO 12 - IL 72 over Owens Creek\Bridge\Microstation\0190030-66K63-028-Abutment Bearing Details.dgn

OATES ASSOCIATES
www.oatesassociates.com
ILLINOIS DESIGN FIRM LICENSE NO.: 184.001115

USER NAME =	DESIGNED - ETH	REVISED -	
	CHECKED - ORG	REVISED -	
PLOT SCALE =	DRAWN - ETH	REVISED -	
PLOT DATE = 4/10/2025	CHECKED - ORG	REVISED -	

STATE OF ILLINOIS
DEPARTMENT OF TRANSPORTATION

GUIDED EXPANSION HLMR DISC BEARING DETAILS
STRUCTURE NO. 019-0030

SHEET 28 OF 42 SHEETS

F.A.P. RTE.	SECTION	COUNTY	TOTAL SHEETS	SHEET NO.
553	(125BR)ES	DEKALB	96	67

CONTRACT NO. 66K63

ILLINOIS FED. AID PROJECT

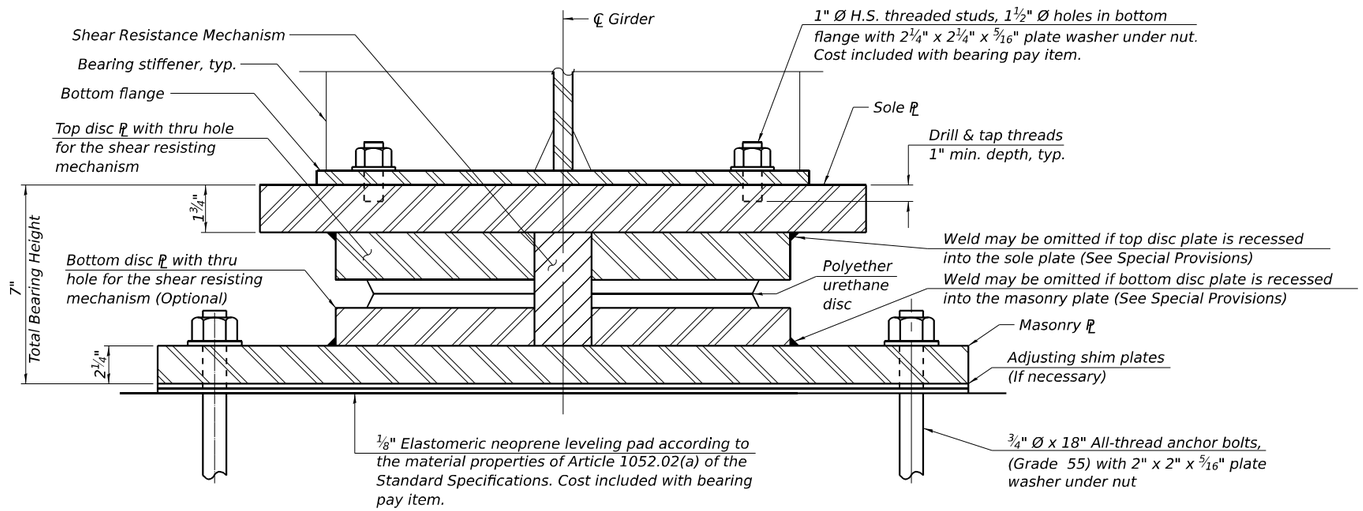

SECTION THRU PIER BEARING

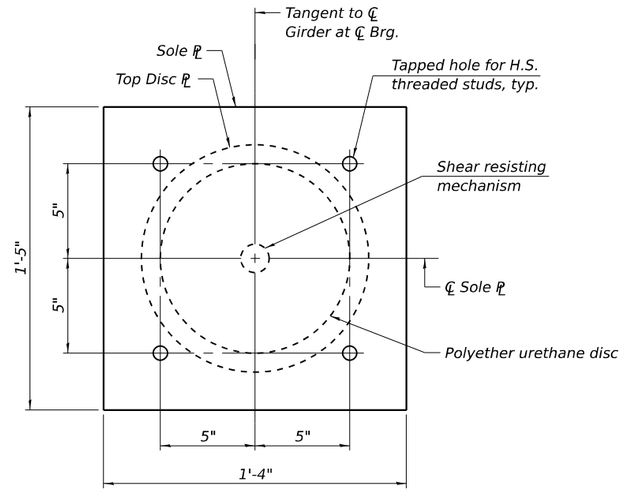

SOLE PLATE AND TOP DISC PLATE PLAN

DESIGN DATA

Unfactored Vertical Dead Load Reaction (R_{DC})	55.5 kips
Unfactored Vertical Wearing Surface Reaction (R_{DW})	16.1 kips
Unfactored Vertical Live Load without Impact Reaction (R_{LL})	122.6 kips
Maximum Strength or Extreme Event Lateral Reaction (H_u)	38.8 kips
Maximum Strength Limit State Rotation (Θ_u according to Article 14.4.2.2)	0.0200 rad
Service I Factored Lateral Reaction	19.4 kips
Service I Rotation	0.0050 rad
Service I Factored Vertical Reaction	194.2 kips
Strength I Factored Vertical Reaction	356.2 kips

Service I Load Factors = 1.0DC + 1.0DW + 1.00LL
Strength I Load Factors = 1.25DC + 1.5DW + 1.75LL + 1.2TU
Extreme Event Load Factors = 1.0EQ

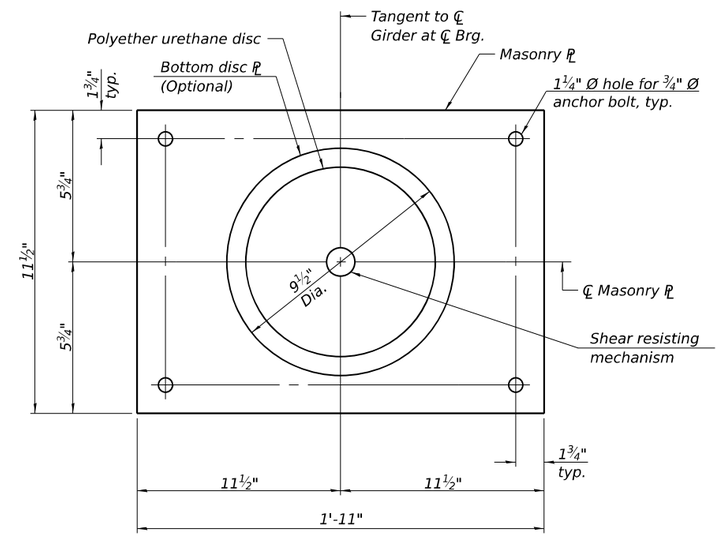

MASONRY PLATE AND BOTTOM DISC PLATE PLAN

NOTES:

1. Two ⅛ in. adjusting shims shall be provided for each bearing in addition to all other plates or shims and placed as shown on bearing details. Shim plates not included in total bearing height. Cost included with bearing pay item.

2. Total bearing height is estimated based on manufacturer data. Actual bearing height may differ from contract plans. The Contractor shall be responsible for verifying bearing heights and adjusting seat elevations, if required, prior to placing pier or abutment concrete.

3. All (embedded and separate) bearing plates, side retainers, anchor bolts, nuts, washers and pintles shall be galvanized according to AASHTO M111 or M232 as applicable.

BEARING SKEW ANGLE TABLE

Location	Girder No.	Bearing Skew Angle
Pier 1	1	46°19'30"
Pier 1	2	46°08'30"
Pier 1	3	45°57'33"
Pier 1	4	45°46'43"
Pier 1	5	45°36'00"
Pier 1	6	45°25'23"
Pier 2	1	44°33'38"
Pier 2	2	44°23'16"
Pier 2	3	44°12'59"
Pier 2	4	44°02'48"
Pier 2	5	43°52'42"
Pier 2	6	43°42'42"

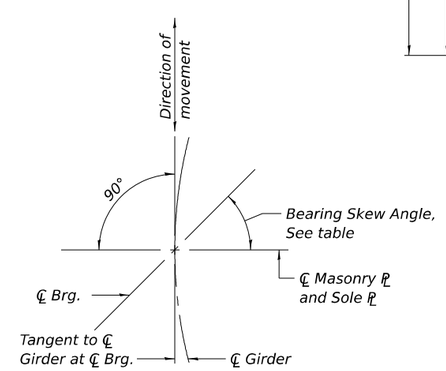

BEARING LAYOUT PLAN

BILL OF MATERIAL

	Item	Unit	Total
*	High Load Multi-Rotational Bearing, Disc, Fixed-200k	Each	12
	Anchor Bolts, ¾"	Each	48

* The value specified in the pay item name is an approximate vertical load capacity that is used for letting and bidding purposes only. Exact bearing capacity will vary subject to final design.

HLMR-D-F 5/15/2023

FILE NAME: H:\P222101 - D3 V-LVWO 12 - IL 72 over Owens Creek\Bridge\Microstation\0190030-66K63-023-Pier Bearing Details.dgn

OATES ASSOCIATES
www.oatesassociates.com
ILLINOIS DESIGN FIRM LICENSE NO.: 184.001115

USER NAME =	DESIGNED - ETH	REVISED -	
	CHECKED - ORG	REVISED -	
PLOT SCALE =	DRAWN - ETH	REVISED -	
PLOT DATE = 4/10/2025	CHECKED - ORG	REVISED -	

STATE OF ILLINOIS
DEPARTMENT OF TRANSPORTATION

FIXED HLMR DISC BEARING DETAILS
STRUCTURE NO. 019-0030

SHEET 29 OF 42 SHEETS

F.A.P. RTE.	SECTION	COUNTY	TOTAL SHEETS	SHEET NO.
553	(125BR)ES	DEKALB	96	68

CONTRACT NO. 66K63
ILLINOIS | FED. AID PROJECT

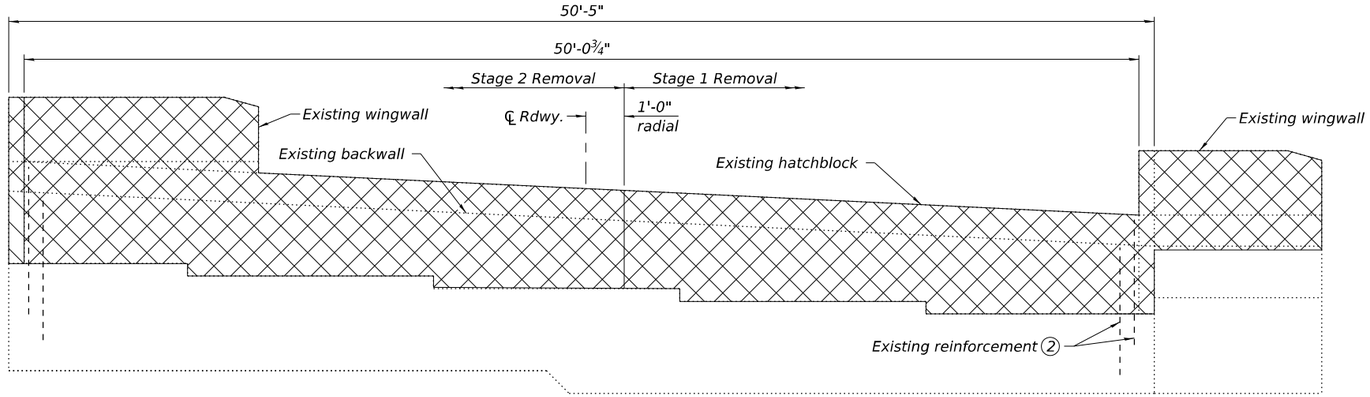

WEST ABUTMENT REMOVAL ④

(Looking west)

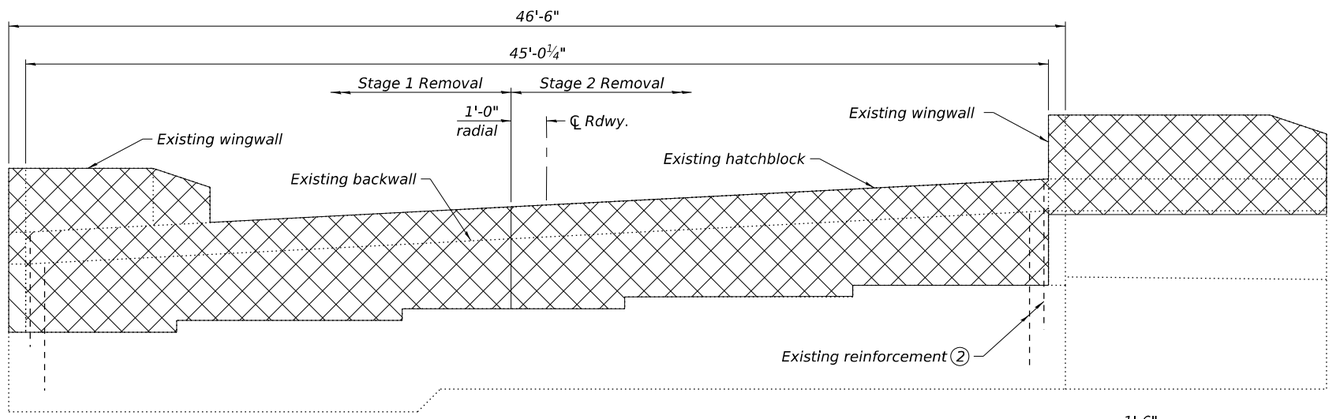

EAST ABUTMENT REMOVAL ④

(Looking east)

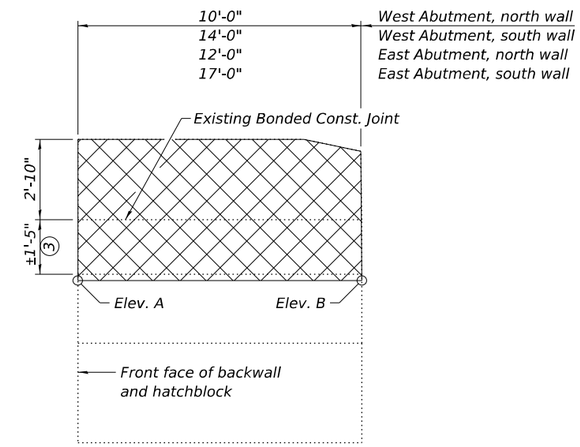

TYPICAL WINGWALL ELEVATION

WINGWALL REMOVAL ELEVATION TABLE

Location	Elev. A	Elev. B
W. Abut. - N. Wingwall	764.80	764.72
W. Abut.- S. Wingwall	767.45	767.32
E. Abut. - N. Wingwall	766.02	766.08
E. Abut.- S. Wingwall	768.47	768.55

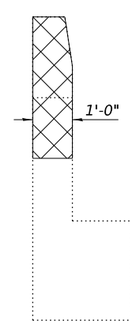

SECTION THRU TYPICAL WINGWALL

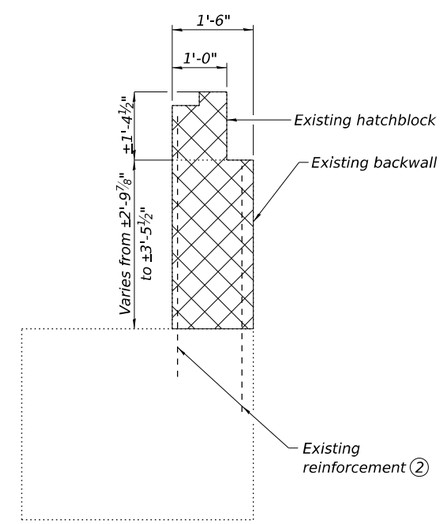

SECTION THRU ABUTMENT

BILL OF MATERIAL

Item	Unit	Total
Concrete Removal	Cu. Yd.	29.0

Notes:

① Crosshatched areas shown are to be removed.

② Existing reinforcement shall be cleaned, straightened and incorporated into the new construction. Any reinforcement bars that are damaged during concrete removal shall be repaired or replaced using an approved bar splicer or anchorage system. Cost incluced with Concrete removal.

③ Wingwall to be removed 2" below bottom of proposed approach slab.

④ Dimensions measured along back of abutment.

FILE NAME: H:\P222101 - D3 V-VWO 12 - IL 72 over Owens Creek\Bridge\Microstation\0190030-66K63-030-Abutment Removal.dgn

OATES ASSOCIATES
www.oatesassociates.com
ILLINOIS DESIGN FIRM LICENSE NO.: 184.001115

USER NAME =	DESIGNED - BAW	REVISED -	
	CHECKED - KP	REVISED -	
PLOT SCALE =	DRAWN - BAW	REVISED -	
PLOT DATE = 4/10/2025	CHECKED - KP	REVISED -	

STATE OF ILLINOIS
DEPARTMENT OF TRANSPORTATION

ABUTMENT REMOVAL
STRUCTURE NO. 019-0030

SHEET 30 OF 42 SHEETS

F.A.P. RTE.	SECTION	COUNTY	TOTAL SHEETS	SHEET NO.
553	(125BR)ES	DEKALB	96	69

CONTRACT NO. 66K63

ILLINOIS | FED. AID PROJECT

WEST ABUTMENT PLAN

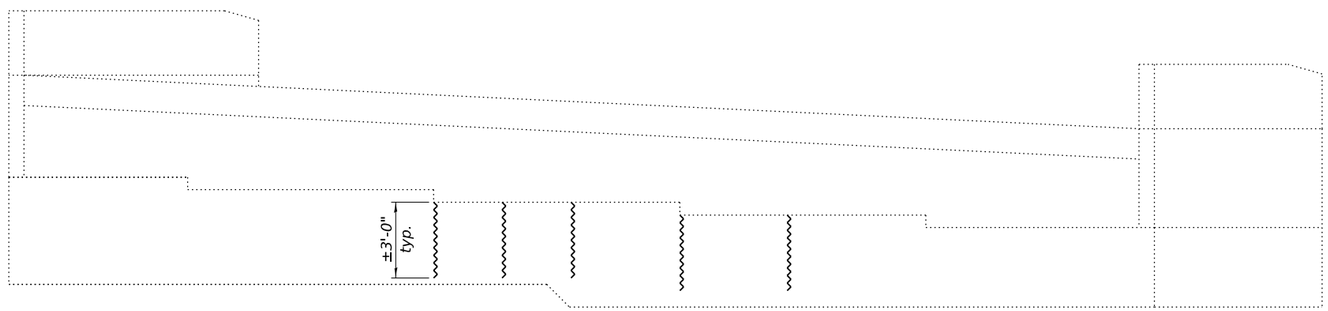

WEST ABUTMENT ELEVATION
(Looking West)

EAST ABUTMENT PLAN

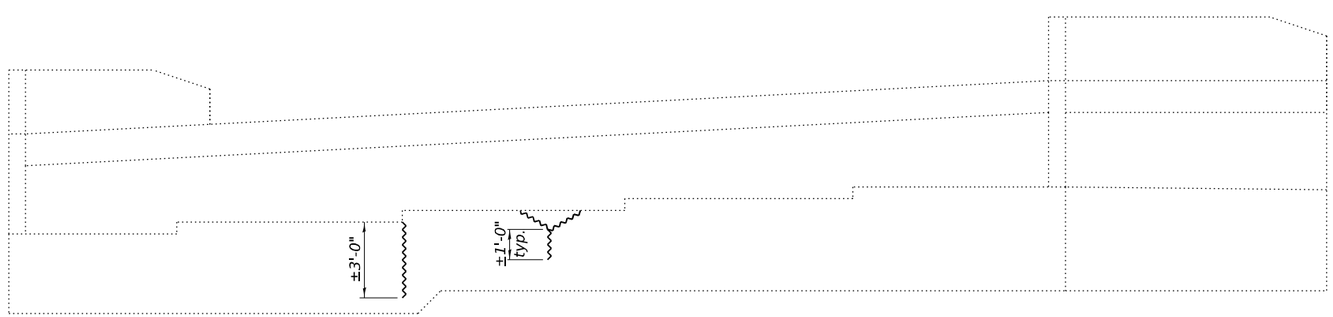

EAST ABUTMENT
(Looking East)

LEGEND

Epoxy Crack Injection

BILL OF MATERIAL

Item	Unit	Total
Epoxy Crack Injection	Foot	21

Notes:
1. The Engineer will determine final repair locations and quantities in the field after loose and spalled concrete has been removed.

FILE NAME: H:\P222101 - D3 V-VWO 12 - IL 72 over Owens Creek\Bridge\Microstation\0190030-66K63-031-Abutment Repairs.dgn

OATES ASSOCIATES
www.oatesassociates.com
ILLINOIS DESIGN FIRM LICENSE NO.: 184.001115

USER NAME =	DESIGNED - ETH	REVISED -	
	CHECKED - KP	REVISED -	
PLOT SCALE =	DRAWN - ETH	REVISED -	
PLOT DATE = 4/10/2025	CHECKED - KP	REVISED -	

STATE OF ILLINOIS
DEPARTMENT OF TRANSPORTATION

ABUTMENT REPAIRS
STRUCTURE NO. 019-0030

SHEET 31 OF 42 SHEETS

F.A.P. RTE.	SECTION	COUNTY	TOTAL SHEETS	SHEET NO.
553	(125BR)ES	DEKALB	96	70

CONTRACT NO. 66K63

ILLINOIS FED. AID PROJECT

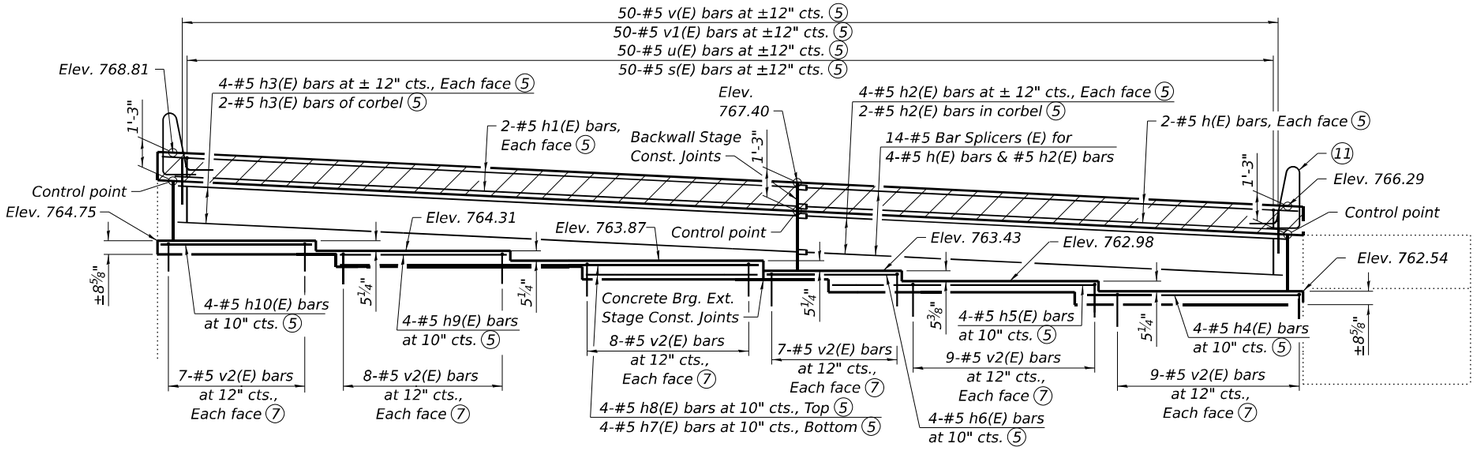

ELEVATION
(Looking west)

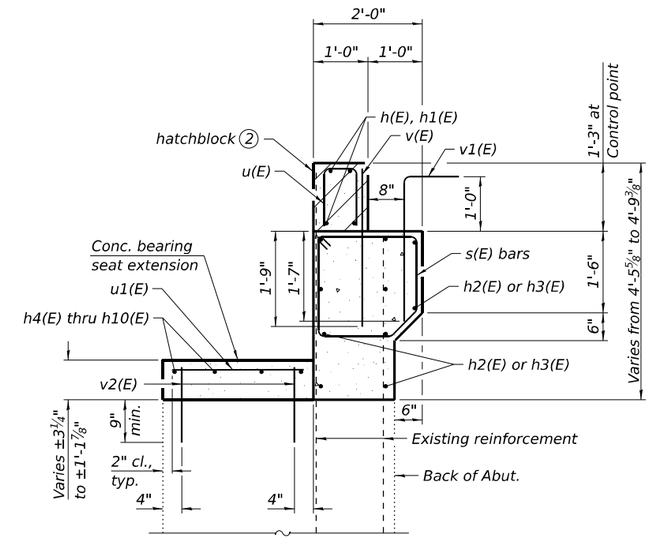

SECTION THRU ABUTMENT

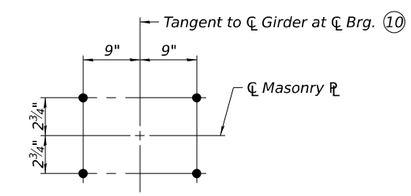

ANCHOR BOLT LAYOUT

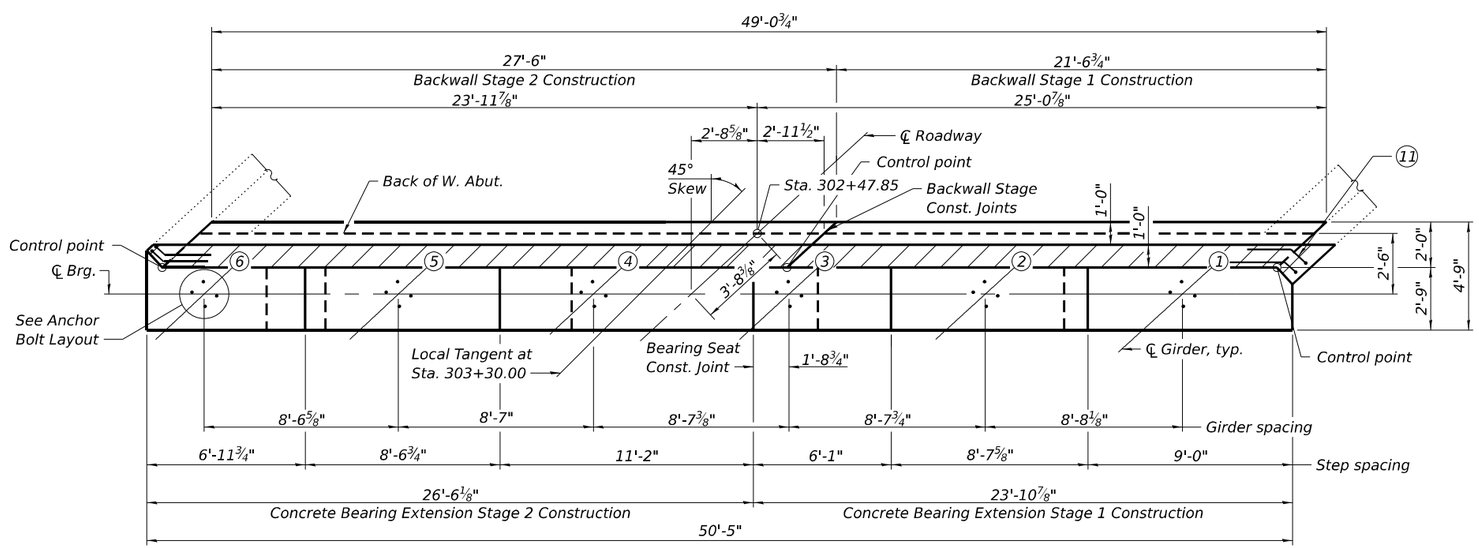

PLAN

Notes:

1. Existing reinforcement shall be cleaned, straightened and incorporated into the new construction. Any reinforcement bars that are damaged during concrete removal shall be repaired or replaced using an approved bar splicer or anchorage system. Cost incluced with Concrete removal.
2. Hatchblock to be poured after superstructure forms have been removed.
3. Adjust bearing seat reinforcement layout as needed to avoid anchor bolts.
4. See sheet 34 of 42 for reinforcement details and Bill of Material.
5. See Section thru Abutment.
6. Concrete Sealer shall be applied to all exposed surfaces of new concrete.
7. Space u1(E) bars with each pair of v2(E) bars. Cut v2(E) bars to maintain clear cover.
8. Epoxy grout v2(E) bars according to Article 584 of the Standard Specification. Drilled holes shall be roughed or scored per manufacture's recommendations. Minimum embedment depth is 9"
9. The top of back wall and approach slab seat shall have a constant slope determined from the control points shown.
10. See sheet 28 of 42 for bearing layout.
11. d2(E) bars for parapets on approach slab, see sheets 20 and 24 of 42.
12. Remove existing bearing seat concrete as needed to ensure a minimum of 4 1/2" of new concrete is placed at all locations. Cost included in Concrete Structures.
13. The joint between the existing bearing seat and concrete bearing seat extension shall be bonded according to Article 503.09 of the Standard Specifications.

FILE NAME: H:\P\22\101 - D3 V-V\WO 12 - IL 72 over Owens Creek\Bridge\Microstation\0190030-66K63-032-Abutment Details.dgn

OATES ASSOCIATES
www.oatesassociates.com
ILLINOIS DESIGN FIRM LICENSE NO.: 184.001115

USER NAME =	DESIGNED - BAW	REVISED -	
	CHECKED - KP	REVISED -	
PLOT SCALE =	DRAWN - BAW	REVISED -	
PLOT DATE = 4/10/2025	CHECKED - KP	REVISED -	

STATE OF ILLINOIS
DEPARTMENT OF TRANSPORTATION

WEST ABUTMENT DETAILS
STRUCTURE NO. 019-0030

SHEET 32 OF 42 SHEETS

F.A.P. RTE.	SECTION	COUNTY	TOTAL SHEETS	SHEET NO.
553	(125BR)ES	DEKALB	96	71
		CONTRACT NO. 66K63		
	ILLINOIS	FED. AID PROJECT		

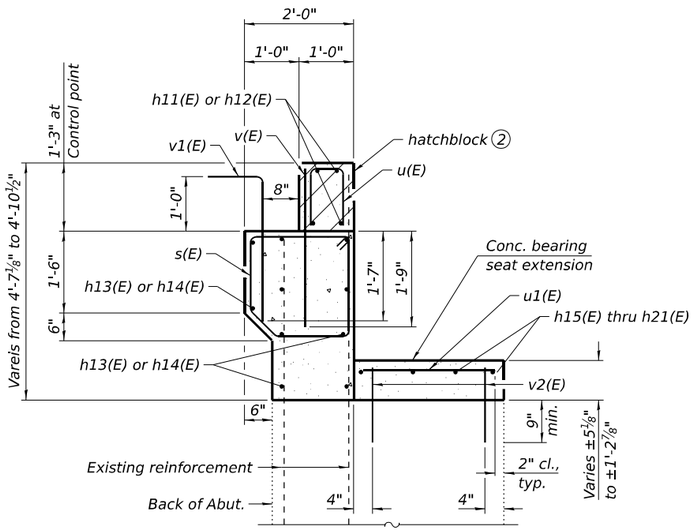

SECTION THRU ABUTMENT

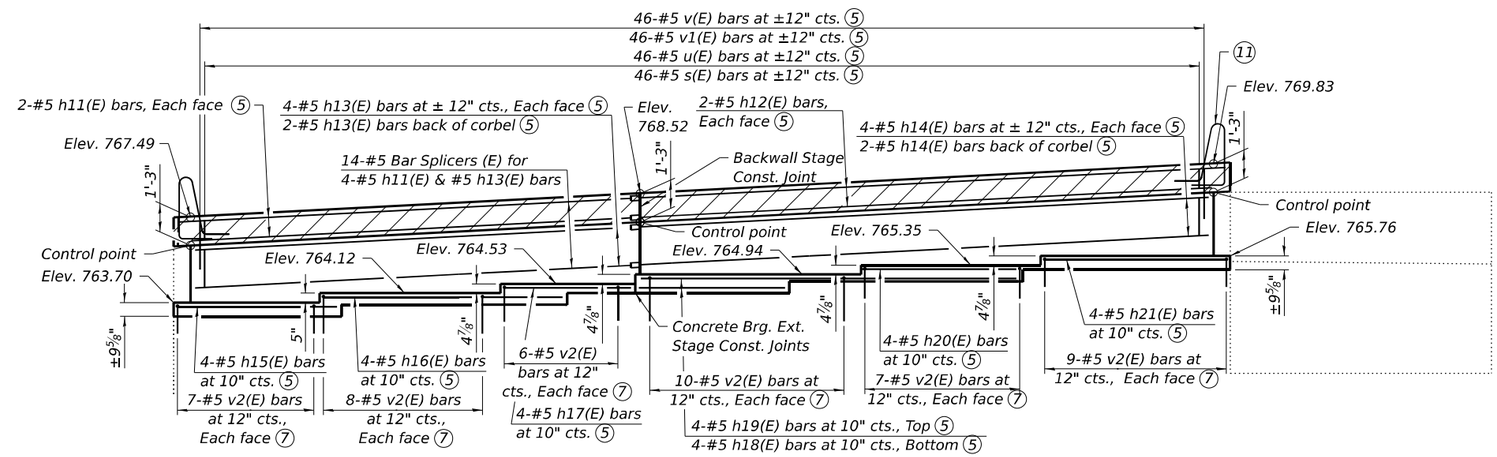

ELEVATION

(Looking east)

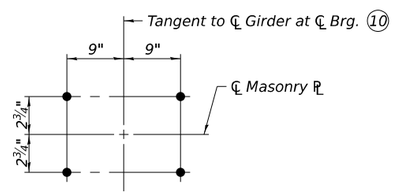

ANCHOR BOLT LAYOUT

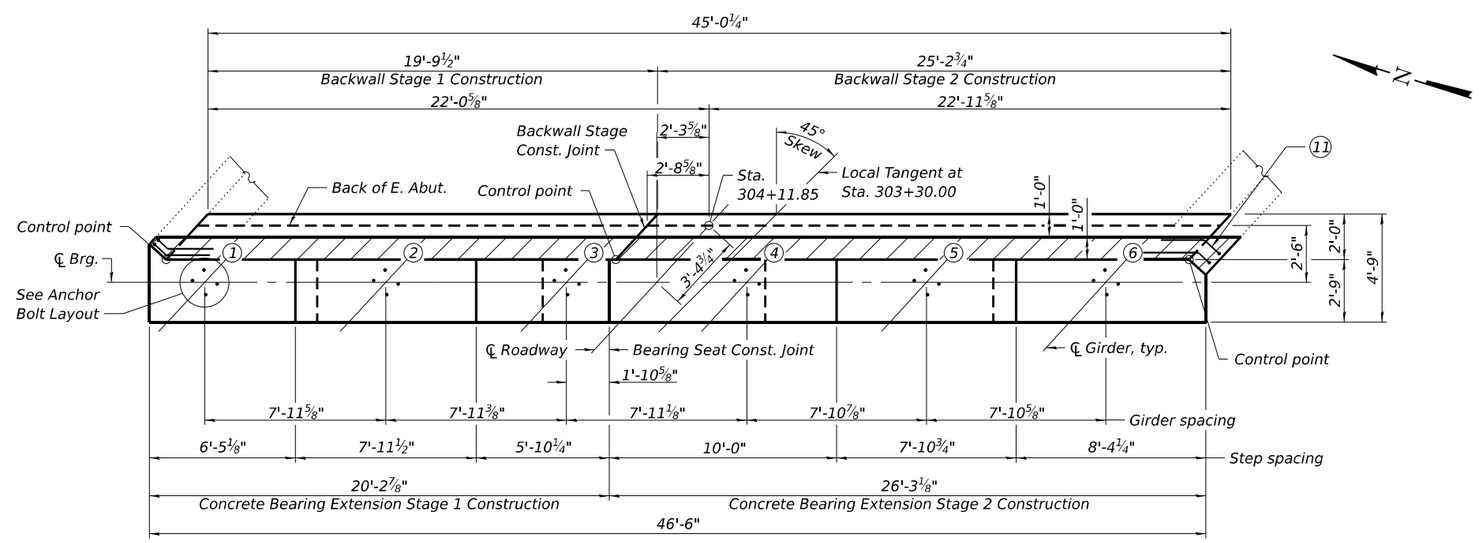

PLAN

Notes:

1. Existing reinforcement shall be cleaned, straightened and incorporated into the new construction. Any reinforcement bars that are damaged during concrete removal shall be repaired or replaced using an approved bar splicer or anchorage system. Cost incluced with Concrete removal.
2. Hatchblock to be poured after superstructure forms have been removed.
3. Adjust bearing seat reinforcement layout as needed to avoid anchor bolts.
4. See sheet 34 of 42 for reinforcement details and Bill of Material.
5. See Section thru Abutment.
6. Concrete Sealer shall be applied to all exposed surfaces of new concrete.
7. Space u1(E) bars with each pair of v2(E) bars. Cut v2(E) bars to maintain clear cover.
8. Epoxy grout v2(E) bars according to Article 584 of the Standard Specification. Drilled holes shall be roughed or scored per manufacture's recommendations. Minimum embedment depth is 9".
9. The top of back wall and approach slab seat shall have a constant slope determined from the control points shown.
10. See sheet 28 of 42 for bearing layout.
11. d2(E) bars for parapets on approach slab, see sheets 22 and 24 of 42
12. Remove existing bearing seat concrete as needed to ensure a minimum of 4 1/2" of new concrete is placed at all locations. Cost included in Concrete Structures.
13. The joint between the existing bearing seat and concrete bearing seat extension shall be bonded according to Article 503.09 of the Standard Specifications..

FILE NAME: H:\P222101 - D3 V-VWO 12 - IL 72 over Owens Creek\Bridge\Microstation\0190030-66K63-033-Abutment Details.dgn

OATES ASSOCIATES
www.oatesassociates.com
ILLINOIS DESIGN FIRM LICENSE NO.: 184.001115

USER NAME =	DESIGNED - BAW	REVISED -	
	CHECKED - KP	REVISED -	
PLOT SCALE =	DRAWN - BAW	REVISED -	
PLOT DATE = 4/10/2025	CHECKED - KP	REVISED -	

STATE OF ILLINOIS
DEPARTMENT OF TRANSPORTATION

EAST ABUTMENT DETAILS
STRUCTURE NO. 019-0030

SHEET 33 OF 42 SHEETS

F.A.P. RTE.	SECTION	COUNTY	TOTAL SHEETS	SHEET NO.
553	(125BR)ES	DEKALB	96	72
		CONTRACT NO. 66K63		
		ILLINOIS	FED. AID PROJECT	

BILL OF MATERIAL WEST ABUT

Bar	No.	Size	Length	Shape
h(E)	4	#5	22'-7"	
h1(E)	4	#5	28'-8"	
h2(E)	10	#5	21'-4"	
h3(E)	10	#5	27'-2"	
h4(E)	4	#5	9'-9"	
h5(E)	4	#5	11'-7"	
h6(E)	4	#5	5'-9"	
h7(E)	4	#5	7'-8"	
h8(E)	4	#5	18'-6"	
h9(E)	4	#5	7'-4"	
h10(E)	4	#5	6'-8"	
s(E)	50	#5	5'-2"	
u(E)	50	#5	2'-6"	
u1(E)	48	#5	2'-5"	
v(E)	50	#5	2'-10"	
v1(E)	50	#5	3'-5"	
v2(E)	96	#5	1'-10"	
Structure Excavation			Cu. Yd.	20
Concrete Structures			Cu. Yd.	14.0
Reinforcement Bars, Epoxy Coated			Pound	2,030
Concrete Sealer			Sq. Ft.	404

BILL OF MATERIAL EAST ABUT

Bar	No.	Size	Length	Shape
h11(E)	4	#5	20'-8"	
h12(E)	4	#5	25'-11"	
h13(E)	10	#5	19'-5"	
h14(E)	10	#5	24'-10"	
h15(E)	4	#5	7'-0"	
h16(E)	4	#5	10'-7"	
h17(E)	4	#5	5'-7"	
h18(E)	4	#5	6'-6"	
h19(E)	4	#5	16'-7"	
h20(E)	4	#5	6'-7"	
h21(E)	4	#5	8'-0"	
s(E)	45	#5	5'-2"	
u(E)	45	#5	2'-6"	
u1(E)	47	#5	2'-5"	
v(E)	45	#5	2'-10"	
v1(E)	45	#5	3'-5"	
v2(E)	94	#5	1'-10"	
Structure Excavation			Cu. Yd.	20
Concrete Structures			Cu. Yd.	12.8
Reinforcement Bars, Epoxy Coated			Pound	1,860
Concrete Sealer			Sq. Ft.	371

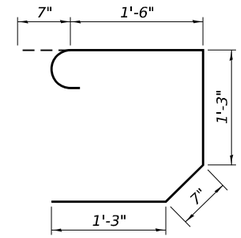

BAR s(E)

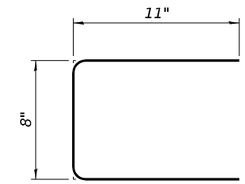

BAR u(E)

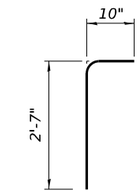

BAR v1(E)

FILE NAME: H:\P222101 - D3 V-V\WO 12 - IL 72 over Owens Creek\Bridge\Microstation\0190030-66K63-034-Abutment Details.dgn

OATES ASSOCIATES
www.oatesassociates.com
ILLINOIS DESIGN FIRM LICENSE NO.: 184.001115

USER NAME =	DESIGNED - BAW	REVISED -	
	CHECKED - KP	REVISED -	
PLOT SCALE =	DRAWN - BAW	REVISED -	
PLOT DATE = 4/10/2025	CHECKED - KP	REVISED -	

STATE OF ILLINOIS
DEPARTMENT OF TRANSPORTATION

ABUTMENT DETAILS
STRUCTURE NO. 019-0030

SHEET 34 OF 42 SHEETS

F.A.P. RTE.	SECTION	COUNTY	TOTAL SHEETS	SHEET NO.
553	(125BR)ES	DEKALB	96	73
		CONTRACT NO. 66K63		
	ILLINOIS	FED. AID PROJECT		

PIER 1 NORTH END

PIER 1 ELEVATION
(Looking East)

PIER 1 SOUTH END

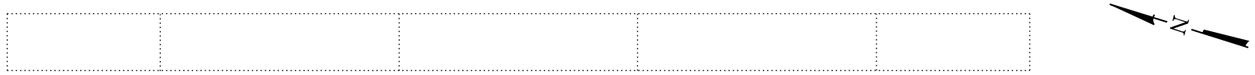

PIER 1 PLAN

PIER 1 ELEVATION
(Looking West)

Notes:
1. The Engineer will determine final repair locations and quantities in the field after loose and spalled concrete has been removed.

FILE NAME: H:\P222101 - D3 V-VWO 12 - IL 72 over Owens Creek\Bridge\Microstation\0190030-66K63-035-Pier 1 Repairs.dgn

OATES ASSOCIATES
www.oatesassociates.com
ILLINOIS DESIGN FIRM LICENSE NO.: 184.001115

USER NAME =	DESIGNED - ETH	REVISED -	
	CHECKED - KP	REVISED -	
PLOT SCALE =	DRAWN - ETH	REVISED -	
PLOT DATE = 4/10/2025	CHECKED - KP	REVISED -	

STATE OF ILLINOIS
DEPARTMENT OF TRANSPORTATION

PIER 1 REPAIRS
STRUCTURE NO. 019-0030

SHEET 35 OF 42 SHEETS

F.A.P. RTE.	SECTION	COUNTY	TOTAL SHEETS	SHEET NO.
553	(125BR)ES	DEKALB	96	74
		CONTRACT NO. 66K63		
	ILLINOIS	FED. AID PROJECT		

PIER 2 NORTH END

PIER 2 ELEVATION
(Looking East)

PIER 2 SOUTH END

PIER 2 PLAN

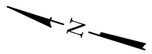

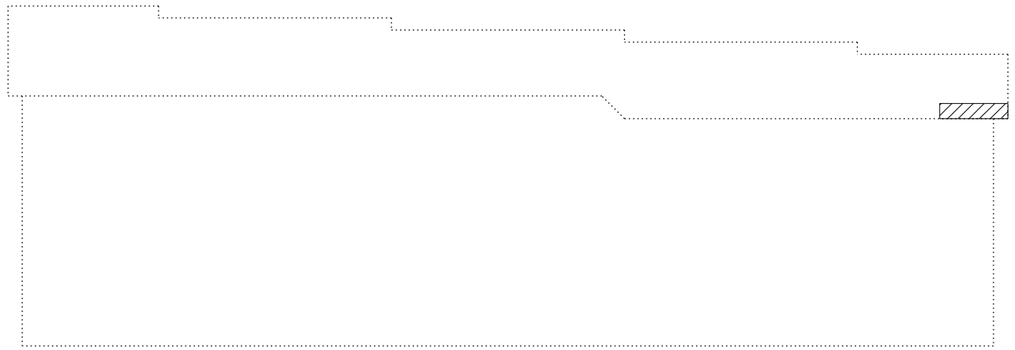

PIER 2 ELEVATION
(Looking West)

LEGEND

Structural Repair of Concrete (Depth Equal To of Less Than 5 Inches)

BILL OF MATERIAL

Item	Unit	Total
Structural Repair of Concrete (Depth Equal To of Less Than 5 Inches)	Sq. Ft.	2

Notes:
1. The Engineer will determine final repair locations and quantities in the field after loose and spalled concrete has been removed.

FILE NAME: H:\P222101 - D3 V-VWO 12 - IL 72 over Owens Creek\Bridge\Microstation\0190030-66K63-038-Pier 2 Repairs.dgn

OATES ASSOCIATES
www.oatesassociates.com
ILLINOIS DESIGN FIRM LICENSE NO.: 184.001115

USER NAME =	DESIGNED - ETH	REVISED -	
	CHECKED - KP	REVISED -	
PLOT SCALE =	DRAWN - ETH	REVISED -	
PLOT DATE = 4/10/2025	CHECKED - KP	REVISED -	

STATE OF ILLINOIS
DEPARTMENT OF TRANSPORTATION

PIER 2 REPAIRS
STRUCTURE NO. 019-0030

SHEET 36 OF 42 SHEETS

F.A.P. RTE.	SECTION	COUNTY	TOTAL SHEETS	SHEET NO.
553	(125BR)ES	DEKALB	96	75
		CONTRACT NO. 66K63		
	ILLINOIS	FED. AID PROJECT		

BILL OF MATERIAL PIER 1

Bar	No.	Size	Length	Shape
h22(E)	4	#5	6'-6"	
h23(E)	4	#5	11'-3"	
h24(E)	4	#5	5'-9"	
h25(E)	4	#5	7'-3"	
h26(E)	4	#5	17'-9"	
h27(E)	4	#5	3'-10"	
h28(E)	4	#5	5'-6"	
u2(E)	46	#5	2'-2"	
v2(E)	92	#5	1'-10"	
Concrete Structures			Cu. Yd.	2.6
Reinforcement Bars, Epoxy Coated			Pound	560
Concrete Sealer			Sq. Ft.	175

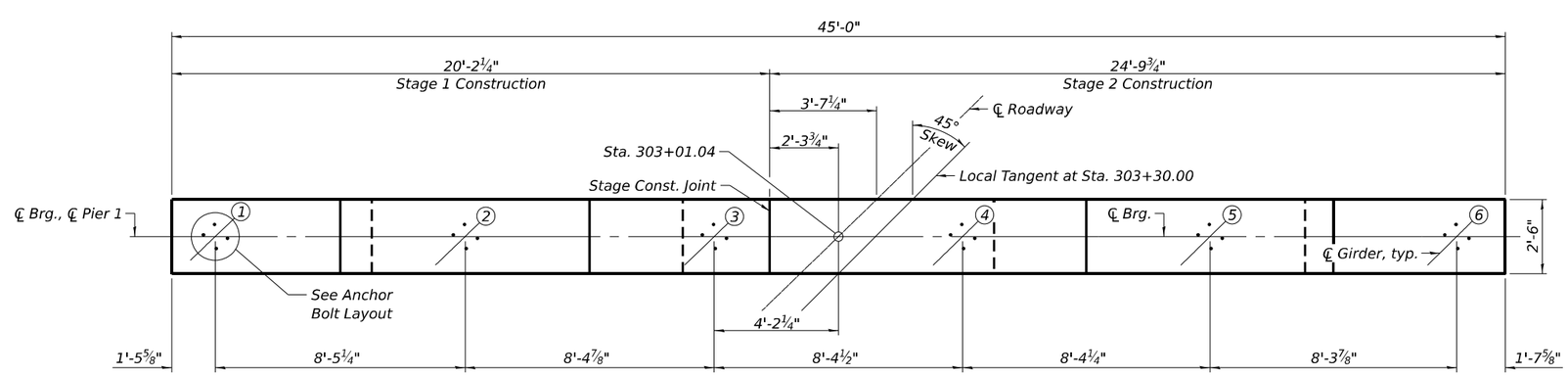

PLAN

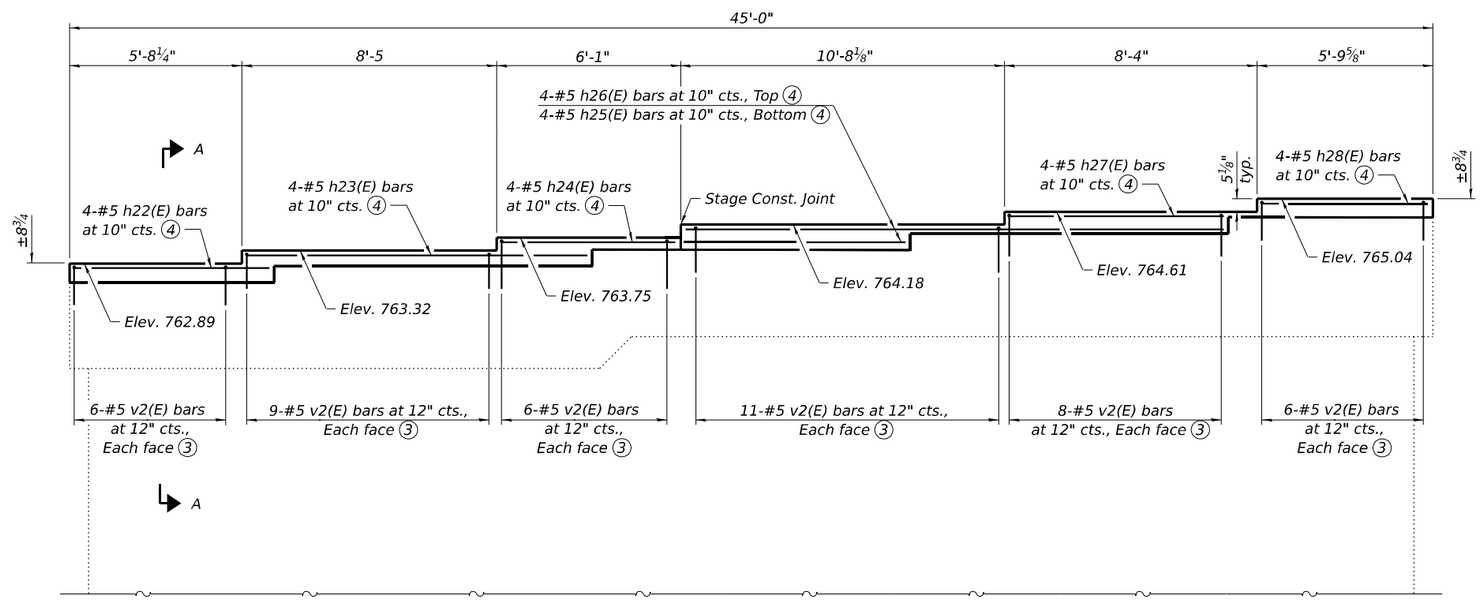

ELEVATION
(Looking East)

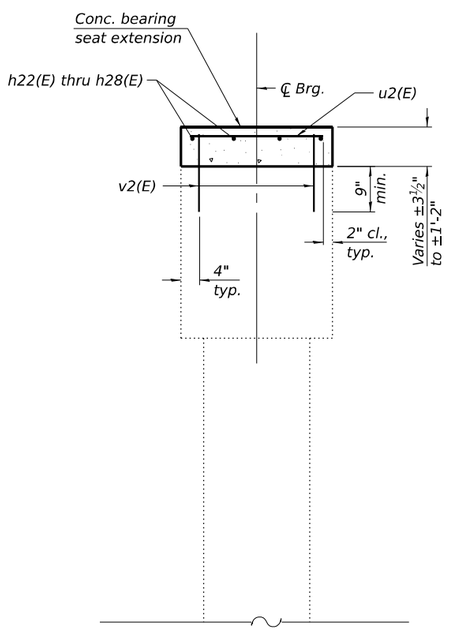

SECTION A-A

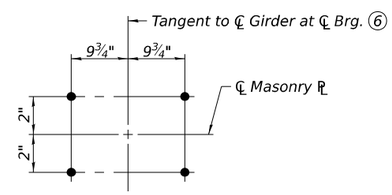

ANCHOR BOLT LAYOUT

Notes:

1. Adjust bearing seat reinforcement layout as needed to avoid anchor bolts.
2. Concrete Sealer shall be applied to all exposed surfaces of new concrete.
3. Space u2(E) bars with each pair of v2(E) bars. Cut v2(E) bars to maintain clear cover.
4. See Section A-A.
5. Epoxy grout v2(E) bars according to Article 584 of the Standard Specification. Drilled holes shall be roughed or scored per manufacture's recommendations. Minimum embedment depth is 9".
6. See sheet 29 of 42 for bearing layout.
7. Remove existing bearing seat concrete as needed to ensure a minimum of 4 1/2" of new concrete is placed at all locations. Cost included in Concrete Structures.
8. The joint between the existing bearing seat and concrete bearing seat extension shall be bonded according to Article 503.09 of the Standard Specifications.

FILE NAME: H:\P222101 - D3 V-I\WO 12 - IL 72 over Owens Creek\Bridge\Microstation\0190030-66K63-037-Pier 1 Details.dgn

OATES ASSOCIATES
www.oatesassociates.com
ILLINOIS DESIGN FIRM LICENSE NO.: 184.001115

USER NAME =	DESIGNED - BAW	REVISED -	
	CHECKED - KP	REVISED -	
PLOT SCALE =	DRAWN - BAW	REVISED -	
PLOT DATE = 4/10/2025	CHECKED - KP	REVISED -	

STATE OF ILLINOIS
DEPARTMENT OF TRANSPORTATION

PIER 1 DETAILS
STRUCTURE NO. 019-0030

SHEET 37 OF 42 SHEETS

F.A.P. RTE.	SECTION	COUNTY	TOTAL SHEETS	SHEET NO.
553	(125BR)ES	DEKALB	96	76

CONTRACT NO. 66K63

ILLINOIS | FED. AID PROJECT

BILL OF MATERIAL PIER 2

Bar	No.	Size	Length	Shape
h29(E)	4	#5	6'-4"	——
h30(E)	4	#5	10'-10"	——
h31(E)	4	#5	5'-7"	——
h32(E)	4	#5	7'-0"	——
h33(E)	4	#5	17'-3"	——
h34(E)	4	#5	6'-11"	——
h35(E)	4	#5	5'-5"	——
u2(E)	46	#5	2'-2"	——
v2(E)	92	#5	1'-10"	——
Concrete Structures			Cu. Yd.	2.5
Reinforcement Bars, Epoxy Coated			Pound	530
Concrete Sealer			Sq. Ft.	172

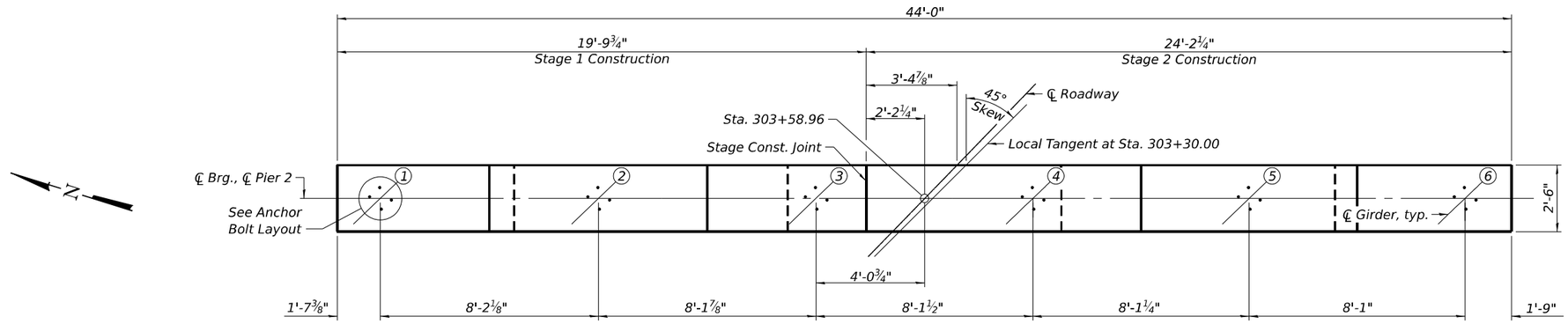

TOP PLAN

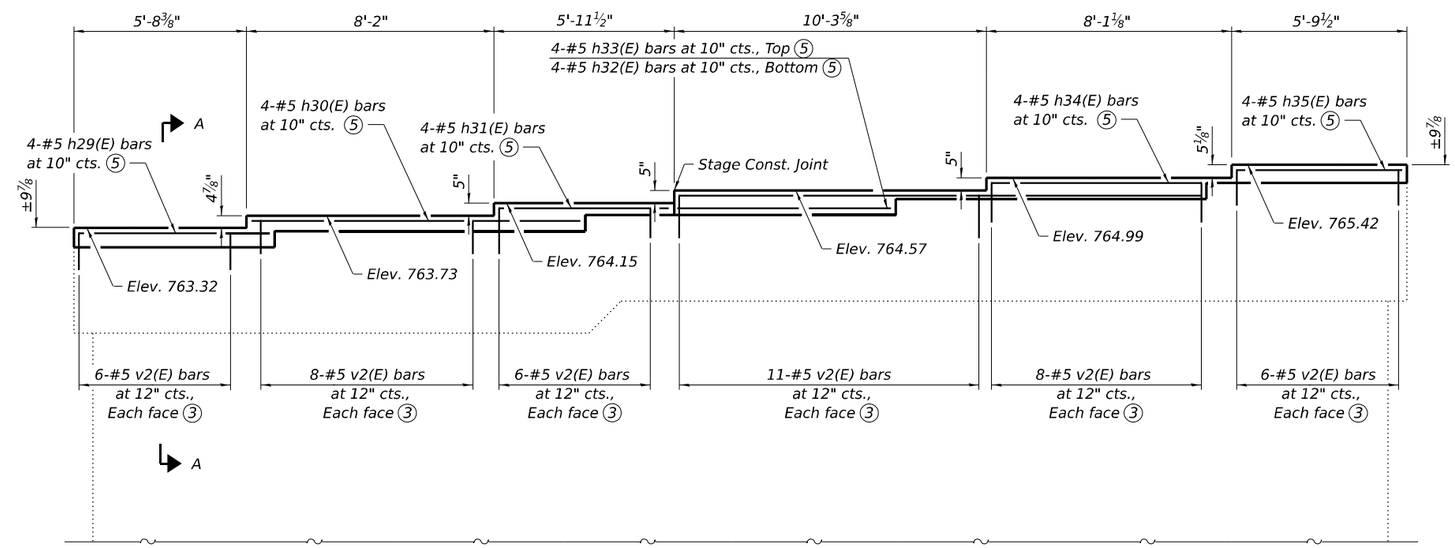

ELEVATION
(Looking East)

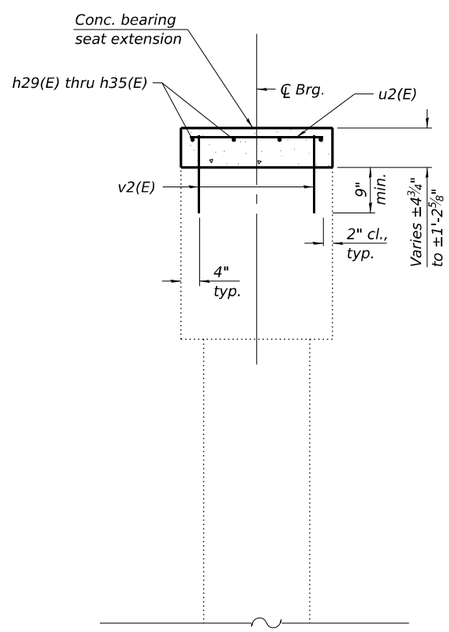

SECTION A-A

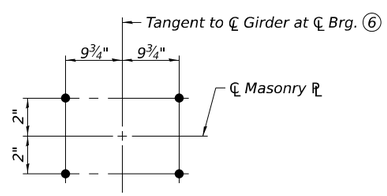

ANCHOR BOLT LAYOUT

Notes:

1. Adjust bearing seat reinforcement layout as needed to avoid anchor bolts.
2. Concrete Sealer shall be applied to all exposed surfaces of new concrete.
3. Space u2(E) bars with each pair of v2(E) bars. Cut v2(E) bars to maintain clear cover.
4. See Section A-A.
5. Epoxy grout v2(E) bars according to Article 584 of the Standard Specification. Drilled holes shall be roughed or scored per manufacture's recommendations. Minimum embedment depth is 9".
6. See sheet 29 of 42 for bearing layout.
7. Remove existing bearing seat concrete as needed to ensure a minimum of 4 1/2" of new concrete is placed at all locations. Cost included in Concrete Structures.
8. The joint between the existing bearing seat and concrete bearing seat extension shall be bonded according to Article 503.09 of the Standard Specifications.

FILE NAME: H:\P222101 - D3 V-VWO 12 - IL 72 over Owens Creek\Bridge\Microstation\0190030-66K63-038-Pier 2 Details.dgn

OATES ASSOCIATES
www.oatesassociates.com
ILLINOIS DESIGN FIRM LICENSE NO.: 184.001115

USER NAME =	DESIGNED - BAW	REVISED -	
	CHECKED - KP	REVISED -	
PLOT SCALE =	DRAWN - BAW	REVISED -	
PLOT DATE = 4/10/2025	CHECKED - KP	REVISED -	

STATE OF ILLINOIS
DEPARTMENT OF TRANSPORTATION

PIER 2 DETAILS
STRUCTURE NO. 019-0030

SHEET 38 OF 42 SHEETS

F.A.P. RTE.	SECTION	COUNTY	TOTAL SHEETS	SHEET NO.
553	(125BR)ES	DEKALB	96	77
		CONTRACT NO. 66K63		
		ILLINOIS	FED. AID PROJECT	

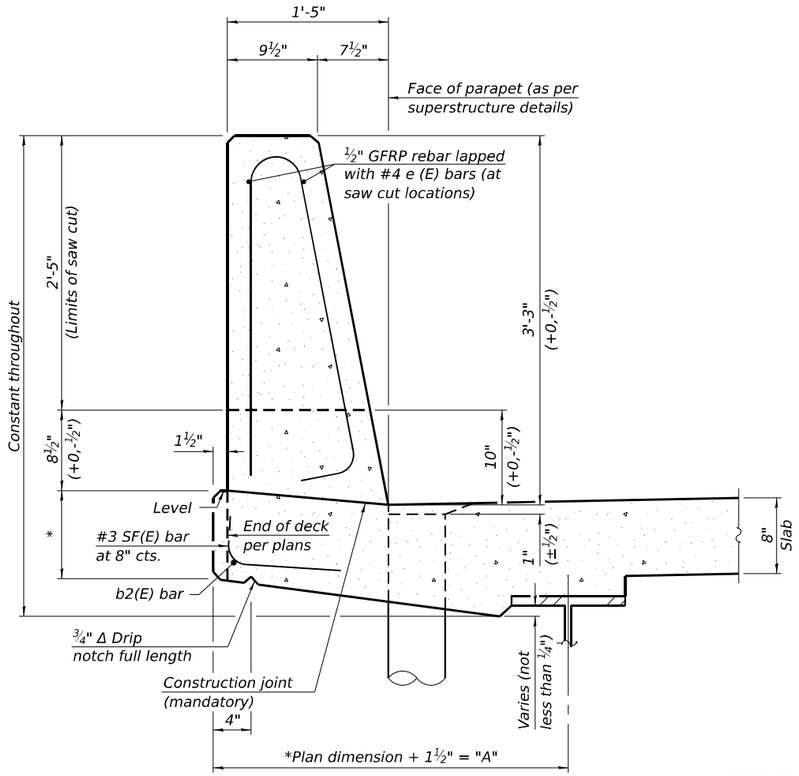

39" CONSTANT-SLOPE PARAPET SECTION

(Showing dimensions, d(E), and ½" Ø GFRP rebar)

STEEL SUPERSTRUCTURES

*See Superstructure Details.

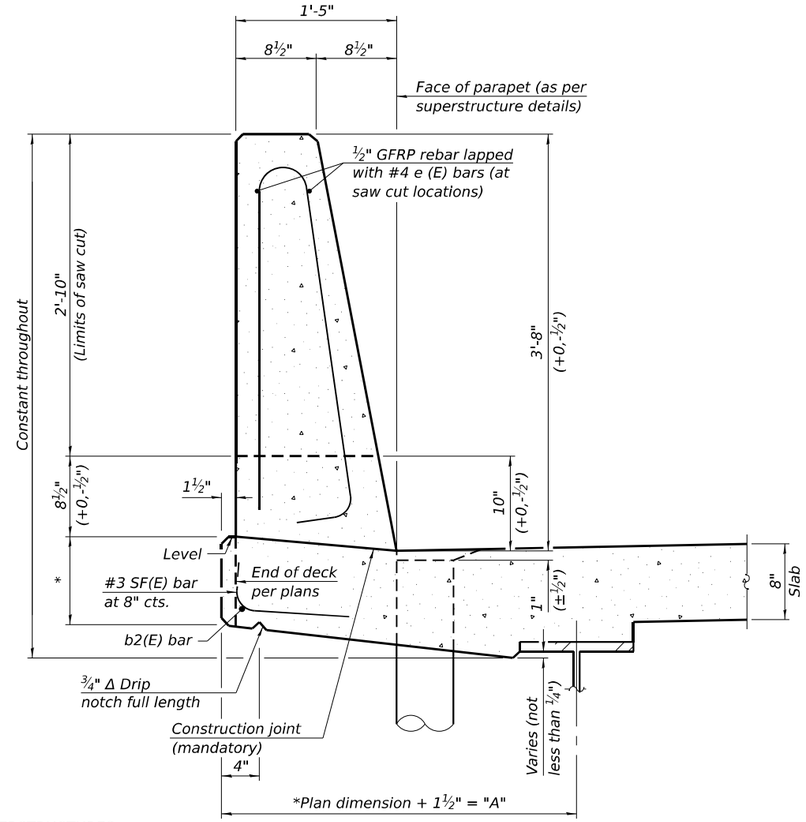

44" CONSTANT-SLOPE PARAPET SECTION

(Showing dimensions, d(E), and ½" Ø GFRP rebar)

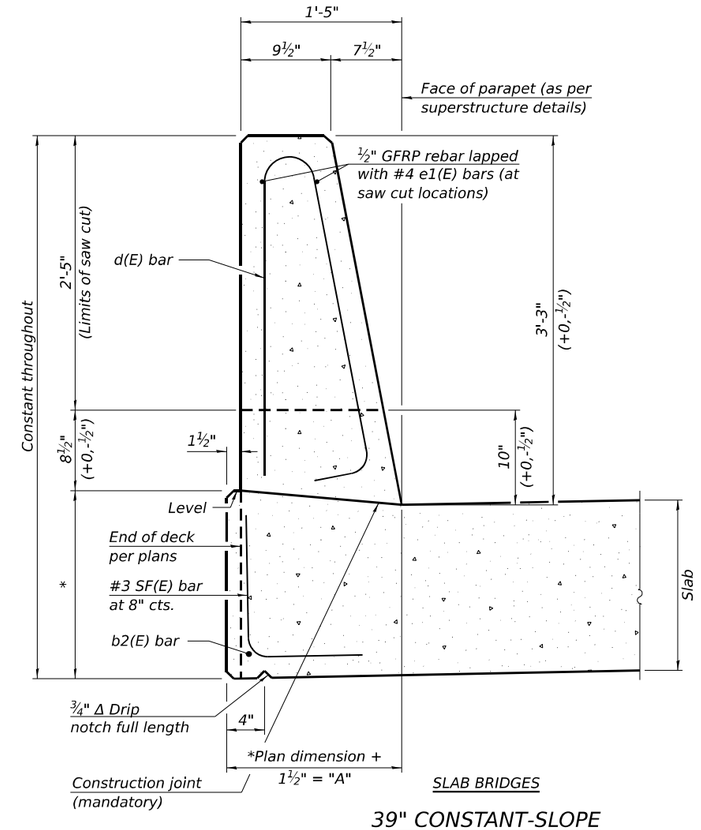

SLAB BRIDGES

39" CONSTANT-SLOPE PARAPET SECTION

(Showing dimensions, d(E), and ½" Ø GFRP rebar)

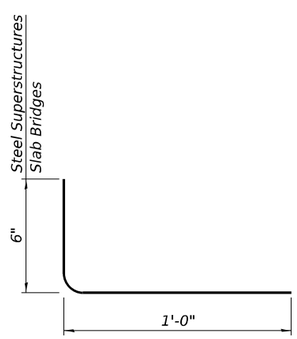

SF(E) BAR

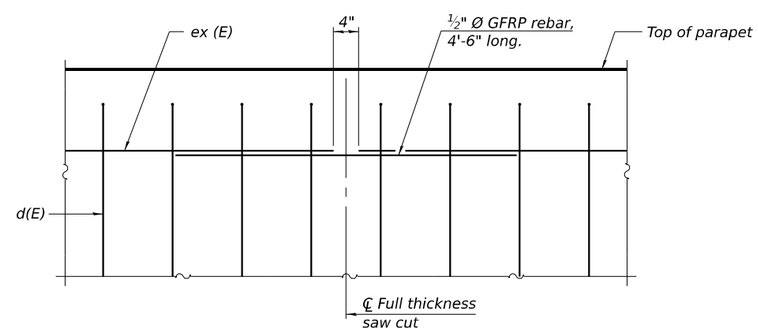

DETAIL - GFRP REBAR STIFFENING ELEVATION

(Place as shown in parapet section at each parapet joint location.)

Notes:
All dimensions shall remain the same as shown on superstructure details, except dimension "A" which is to be revised as shown.
Additional concrete needed to revise dimension "A" (39" and 44" parapets):
Steel Superstructures: 0.00348 cu. yds./ft.
Slab Bridge Superstructures: cu. yds./ft.
Place full depth aluminum sheets as shown on superstructure details.
Replace all cork joint filler locations with a full thickness saw cut.
Steel and slab superstructures shown. Other superstructure types similar.

SFP 39-44 10/27/2023

FILE NAME: H:\P222101 - D3 V-V\WO 12 - IL 72 over Owens Creek\Bridge\Microstation\0190030-66K63-039-Concrete Parapet Slipforming Option.dgn

OATES ASSOCIATES
www.oatesassociates.com
ILLINOIS DESIGN FIRM LICENSE NO.: 184.001115

USER NAME =	DESIGNED - BAW	REVISED -	
	CHECKED - KP	REVISED -	
PLOT SCALE =	DRAWN - BAW	REVISED -	
PLOT DATE = 4/10/2025	CHECKED - KP	REVISED -	

STATE OF ILLINOIS
DEPARTMENT OF TRANSPORTATION

CONCRETE PARAPET SLIPFORMING OPTION
STRUCTURE NO. 019-0030

SHEET 39 OF 42 SHEETS

F.A.P. RTE.	SECTION	COUNTY	TOTAL SHEETS	SHEET NO.
553	(125BR)ES	DEKALB	96	78

CONTRACT NO. 66K63

ILLINOIS FED. AID PROJECT

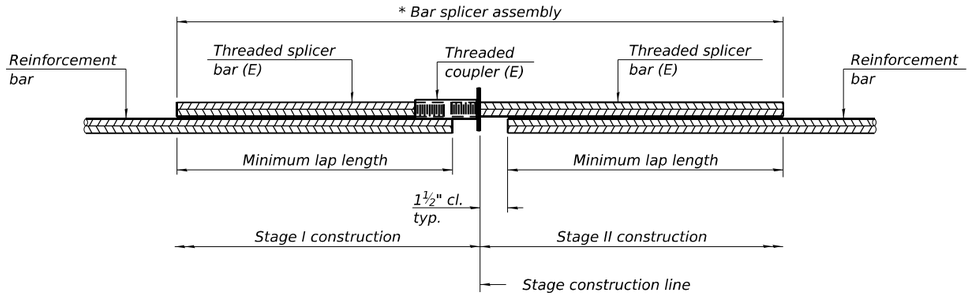

STANDARD BAR SPLICER ASSEMBLY PLAN

Only bar splicer assemblies as presented on the approved QPL list may be used.

Threaded splicer bar length = min. lap length + 1½" + thread length

* Epoxy not required on Bar Splicer Assembly components used in conjunction with black bars.

Location	Bar size	No. assemblies required	Minimum lap length
W. Abut. Backwall	#5	14	3'-2"
E. Abut. Backwall	#5	14	3'-2"
Deck	#5	456	3'-6"
Diaphragm	#5	4	3'-6"
Diaphragm	#5	4	3'-6"
Top & Bot. Appr. Footings	#5	80	3'-6"
Btm. of Approach Slab	#8	86	4'-9"
Top of Approach Slab	#5	65	3'-4"

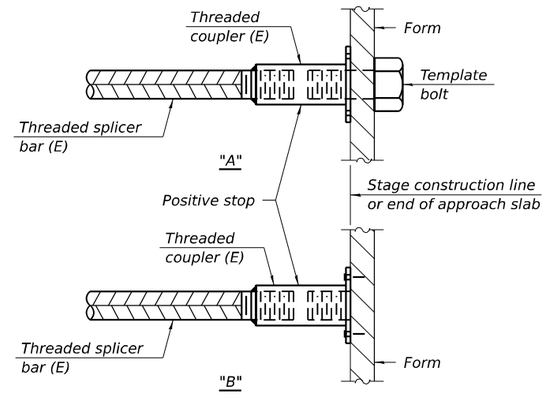

INSTALLATION AND SETTING METHODS

"A" : Set bar splicer assembly by means of a template bolt.
"B" : Set bar splicer assembly by nailing to wood forms or cementing to steel forms.
(E) : Indicates epoxy coating.

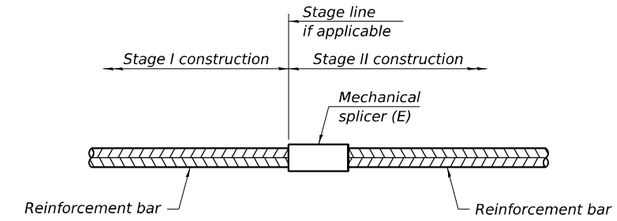

STANDARD MECHANICAL SPLICER

Location	Bar size	No. assemblies required

Notes:
Splicer bars shall be deformed with threaded ends and have a minimum 60 ksi yield strength.
All reinforcement shall be lapped and tied to the splicer bars.
Bar splicer assemblies shall be epoxy coated according to the requirements for reinforcement bars. See Section 508 of the Standard Specifications.
See approved list of bar splicer assemblies and mechanical splicers for alternatives.

BSD-1 5-15-2023

FILE NAME: H:\P022101 - D3 V-V\WO 12 - IL 72 over Owens Creek\Bridge\Microstation\0190030-66K63-040-Bar Splicer Assembly and Mechanical Splicer Details.dgn

OATES ASSOCIATES
www.oatesassociates.com
ILLINOIS DESIGN FIRM LICENSE NO.: 184.001115

USER NAME =	DESIGNED - BAW	REVISED -	
	CHECKED - KP	REVISED -	
PLOT SCALE =	DRAWN - BAW	REVISED -	
PLOT DATE = 4/10/2025	CHECKED - KP	REVISED -	

STATE OF ILLINOIS
DEPARTMENT OF TRANSPORTATION

BAR SPLICER ASSEMBLY AND MECHANICAL SPLICER DETAILS
STRUCTURE NO. 019-0030

SHEET 40 OF 42 SHEETS

F.A.P. RTE.	SECTION	COUNTY	TOTAL SHEETS	SHEET NO.
553	(125BR)ES	DEKALB	96	79
		CONTRACT NO. 66K63		
		ILLINOIS	FED. AID PROJECT	

Illinois Department of Transportation
Division of Highways
Illinois Department of Transportation

SOIL BORING LOG

Page 1 of 2

Date 6/27/22

ROUTE FAP 553 (IL 72) DESCRIPTION IL 72 over Owens Creek 1.3 mi West of Kirkland LOGGED BY Larry Myers

SECTION 125-BR LOCATION NE 1/4, SEC. 28, TWP. 42N, RNG. 3E, 3rd PM,
Latitude 42.08824, Longitude -88.88121

COUNTY DeKalb DRILLING METHOD Hollow Stem Auger HAMMER TYPE CME Automatic

STRUCT. NO. 019-0030 (Exist.)
Station 303+30

BORING NO. 1 (NW Quad)
Station 302+07
Offset 13.2 ft Lt.
Ground Surface Elev. 766.10 ft

Surface Water Elev. ft
Stream Bed Elev. ft

Groundwater Elev.:
First Encounter 750.1 ft ▼
Upon Completion 750.1 ft ▽
After ___ Hrs. ft

Description	Elev.	DEPTH (ft)	BLOWS (/6")	UCS Qu (tsf)	MOIST (%)
Cored Concrete Pavement, Augered Brown Sandy Clay Loam Till Fill	763.60				
			2		
Stiff Brown Sandy Clay Loam Till Fill	761.10	-5	3 4	2.0 P	12
Asphalt. Assumed Old Road Bed	760.10		100/4		
Stiff Black Silty Clay Loam with Gravel Pieces - Fill			2 2 3	1.5 P	20
		-10	2 2 3	1.3 P	28
Soft/Loose Black Sand, Silt, Sandy Loam	754.10		3 2 2	0.5 P	24
Medium Gray Fine Sand to Course Gravel - Loamy	751.60	-15	2 9 8		9
			4 3 4		11
	746.10	-20			

Description	Elev.	DEPTH (ft)	BLOWS (/6")	UCS Qu (tsf)	MOIST (%)
Stiff to Very Stiff Light Gray Sandy Loam with Sandy Clay Loam Layers, Sand and Silt Layers			3 6 7	1.5 P	11
			9 12 13	2.5 P	15
		-25	4 6 9	2.0 P	14
			4 5 7	2.5 P	17
	736.60				
Very Stiff Light Brown Silty Clay Loam Till with Silty Clay Layers		-30	5 6 8	3.6 B	15
		-35	4 5	2.0 P	13
			3 5 6	3.1 B	11
	729.10				
Hard Light Brown Silty Clay Loam Till		-40	5 7 9	4.0 B	11

The Unconfined Compressive Strength (UCS) Failure Mode is indicated by (B-Bulge, S-Shear, P-Penetrometer)
The SPT (N value) is the sum of the last two blow values in each sampling zone (AASHTO T206)

BBS, form 137 (Rev. 8-99)

SOIL BORING 019-0030.GPJ IL_DOT.GDT 8.22.22

Illinois Department of Transportation
Division of Highways
Illinois Department of Transportation

SOIL BORING LOG

Page 2 of 2

Date 6/27/22

ROUTE FAP 553 (IL 72) DESCRIPTION IL 72 over Owens Creek 1.3 mi West of Kirkland LOGGED BY Larry Myers

SECTION 125-BR LOCATION NE 1/4, SEC. 28, TWP. 42N, RNG. 3E, 3rd PM,
Latitude 42.08824, Longitude -88.88121

COUNTY DeKalb DRILLING METHOD Hollow Stem Auger HAMMER TYPE CME Automatic

STRUCT. NO. 019-0030 (Exist.)
Station 303+30

BORING NO. 1 (NW Quad)
Station 302+07
Offset 13.2 ft Lt.
Ground Surface Elev. 766.10 ft

Surface Water Elev. ft
Stream Bed Elev. ft

Groundwater Elev.:
First Encounter 750.1 ft ▼
Upon Completion 750.1 ft ▽
After ___ Hrs. ft

Description	Elev.	DEPTH (ft)	BLOWS (/6")	UCS Qu (tsf)	MOIST (%)
Hard Light Brown Silty Clay Loam Till *(continued)*			8 9 10	4.5 B	11
			7 8 9	4.1 B	12
		-45	5 6 8	3.7 B	16
			6 6 8	3.7 B	13
	716.60				
Hard Gray Silty Clay Loam Till with Some Sand/Gravel Layers and Silty Clay Layers		-50	4 6 8	4.0 P	10
			8 10 12		20
		-55	10 12 15	4.5 P	9
			12 18 31	>4.5 P	14
		-60			

Description	Elev.	DEPTH (ft)	BLOWS (/6")	UCS Qu (tsf)	MOIST (%)
Hard Gray Silty Clay Loam Till with Some Sand/Gravel Layers and Silty Clay Layers *(continued)*	704.60		17 24 36	>4.5 P	17
End of Boring					
		-65			
		-70			
		-75			
		-80			

The Unconfined Compressive Strength (UCS) Failure Mode is indicated by (B-Bulge, S-Shear, P-Penetrometer)
The SPT (N value) is the sum of the last two blow values in each sampling zone (AASHTO T206)

BBS, form 137 (Rev. 8-99)

SOIL BORING 019-0030.GPJ IL_DOT.GDT 8.22.22

FILE NAME: H:\P222101 - D3 V-V\WO 12 - IL 72 over Owens Creek\Bridge\Microstation\019\0030-66K63-041-Soil Boring Log.dgn

OATES ASSOCIATES
www.oatesassociates.com
ILLINOIS DESIGN FIRM LICENSE NO.: 184.001115

USER NAME =	DESIGNED -	REVISED -
	CHECKED -	REVISED -
PLOT SCALE =	DRAWN -	REVISED -
PLOT DATE = 4/10/2025	CHECKED -	REVISED -

STATE OF ILLINOIS
DEPARTMENT OF TRANSPORTATION

SOIL BORING LOGS
STRUCTURE NO. 019-0030

SHEET 41 OF 42 SHEETS

F.A.P. RTE.	SECTION	COUNTY	TOTAL SHEETS	SHEET NO.
553	(125BR)ES	DEKALB	96	80

CONTRACT NO. 66K63

ILLINOIS FED. AID PROJECT

Illinois Department of Transportation
Division of Highways
Illinois Department of Transportation

SOIL BORING LOG

Date 6/28/22

ROUTE FAP 553 (IL 72) DESCRIPTION IL 72 over Owens Creek 1.3 mi West of Kirkland LOGGED BY Larry Myers

SECTION 125-BR LOCATION NW 1/4, SEC. 27, TWP. 42N, RNG. 3E, 3rd PM,
Latitude 42.08786, Longitude -88.88043

COUNTY DeKalb DRILLING METHOD Hollow Stem Auger HAMMER TYPE CME Automatic

STRUCT. NO. 019-0030 (Exist.)
Station 303+30

BORING NO. 2 (WE Quad)
Station 304+59
Offset 13.5 ft Rt.
Ground Surface Elev. 769.20 ft

Surface Water Elev. ft
Stream Bed Elev. ft

Groundwater Elev.:
First Encounter 750.2 ft ▼
Upon Completion 751.2 ft ▽
After ___ Hrs. ft

Description	Elev.	DEPTH (ft)	BLOWS (/6")	UCS Qu (tsf)	MOIST (%)
Cored Concrete Pavement, Augered Asphalt BAM, Brown Silty Clay Loam Till Fill and Gravel					
Asphalt and Concrete Pavement @ 5'	764.20	-5	4		
Very Stiff Black Silty Clay Loam Fill with Organics	762.70		5 5	3.0 P	19
Stiff Brown Sandy Clay Loam Till Fill with Sand and Gravel Layers			2 2 3	1.5 P	14
WH = Weight of Hammer		-10	2 2 1	1.5 P	16
			WH 1 3	1.0 P	20
Stiff Black Silty Loam Fill with Sand and Gravel and Concrete Debris Pieces	755.20	-15	3 27 7	2.0 P	21
Very Stiff to Hard Gray Silty Clay Loam Till	752.20		4 6 10	3.8 S	8
Boulder/Cobble @ 20'		-20			
Very Stiff to Hard Gray Silty Clay Loam Till *(continued)*			24 16 24	5.1 S	8
Auger Refusal @ 21' - Offset 5' and Continued Boring		-25	27 40 45	9.0 S	10
			19 25 36	8.1 S	8
			34 44 40	10.5 S	8
		-30	20 22 27	9.3 S	9
Dense Gray Fine to Course Sand	737.20		16 21 25		11
Hard Gray Silty Clay Loam Till, with Silt, Sand and Clay Layers	734.70	-35	18 22 27	8.4 S	10
			19 24 27	9.1 S	9
		-40			

The Unconfined Compressive Strength (UCS) Failure Mode is indicated by (B-Bulge, S-Shear, P-Penetrometer)
The SPT (N value) is the sum of the last two blow values in each sampling zone (AASHTO T206)

BBS, form 137 (Rev. 8-99)

SOIL BORING 019-0030.GPJ IL_DOT.GDT 8/2/22

Illinois Department of Transportation
Division of Highways
Illinois Department of Transportation

SOIL BORING LOG

Date 6/28/22

ROUTE FAP 553 (IL 72) DESCRIPTION IL 72 over Owens Creek 1.3 mi West of Kirkland LOGGED BY Larry Myers

SECTION 125-BR LOCATION NW 1/4, SEC. 27, TWP. 42N, RNG. 3E, 3rd PM,
Latitude 42.08786, Longitude -88.88043

COUNTY DeKalb DRILLING METHOD Hollow Stem Auger HAMMER TYPE CME Automatic

STRUCT. NO. 019-0030 (Exist.)
Station 303+30

BORING NO. 2 (WE Quad)
Station 304+59
Offset 13.5 ft Rt.
Ground Surface Elev. 769.20 ft

Surface Water Elev. ft
Stream Bed Elev. ft

Groundwater Elev.:
First Encounter 750.2 ft ▼
Upon Completion 751.2 ft ▽
After ___ Hrs. ft

Description	Elev.	DEPTH (ft)	BLOWS (/6")	UCS Qu (tsf)	MOIST (%)
Hard Gray Silty Clay Loam Till, with Silt, Sand and Clay Layers *(continued)*	727.70		20 26 29	10.4 S	9
Stiff Brown Sandy Clay Loam Till Fill with Sand and Gravel Layers		-45			
WH = Weight of Hammer		-50			
End of Boring		-55			
		-60			

The Unconfined Compressive Strength (UCS) Failure Mode is indicated by (B-Bulge, S-Shear, P-Penetrometer)
The SPT (N value) is the sum of the last two blow values in each sampling zone (AASHTO T206)

BBS, form 137 (Rev. 8-99)

SOIL BORING 019-0030.GPJ IL_DOT.GDT 8/2/22

FILE NAME: H:\P222101 - D3 V-V\WO 12 - IL 72 over Owens Creek\Bridge\Microstation\019\0030-66K63-042-Soil Boring Log.dgn

OATES ASSOCIATES
www.oatesassociates.com
ILLINOIS DESIGN FIRM LICENSE NO.: 184.001115

USER NAME =	DESIGNED -	REVISED -	
	CHECKED -	REVISED -	
PLOT SCALE =	DRAWN -	REVISED -	
PLOT DATE = 4/10/2025	CHECKED -	REVISED -	

STATE OF ILLINOIS
DEPARTMENT OF TRANSPORTATION

SOIL BORING LOGS
STRUCTURE NO. 019-0030

SHEET 42 OF 42 SHEETS

F.A.P. RTE.	SECTION	COUNTY	TOTAL SHEETS	SHEET NO.
553	(125BR)ES	DEKALB	96	81

CONTRACT NO. 66K63

ILLINOIS FED. AID PROJECT

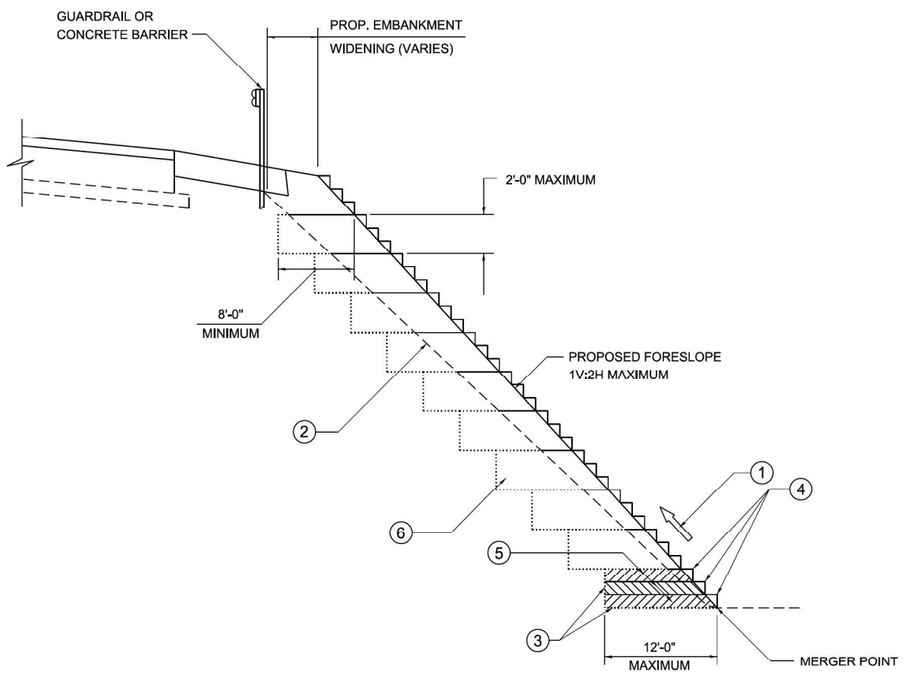

TYPICAL BENCHING DETAIL FOR EMBANKMENT

NOTES:

1. CONSTRUCT SUCCEEDING BENCH CUTS AND EMBANKMENT PLACEMENT AND COMPACTION FROM BOTTOM TO TOP IN STAIRSTEP FASHION.
2. EXISTING FORESLOPE PREPARED IN ACCORDANCE WITH ARTICLE 205.03 OF THE STANDARD SPECIFICATIONS.
3. BENCH CUT EXISTING SLOPE TYPICAL FOR EACH STEP.
4. TRIM TO FINAL SLOPE.
5. EQUAL 8-INCH LIFTS OF EMBANKMENT COMPACTED IN ACCORDANCE WITH ARTICLE 205.05 OF THE STANDARD SPECIFICATIONS.
6. EXCAVATION OF BENCH CUTS WITHIN EXISTING EMBANKMENT WILL BE INCLUDED IN THE COST OF FURNISHED EXCAVATION.
7. SLOPES SHALL BE BENCHED ACCORDING TO THIS DETAIL WHEN THE SLOPE IS STEEPER THAN 1V:4H AND THE HEIGHT IS GREATER THAN 5'.

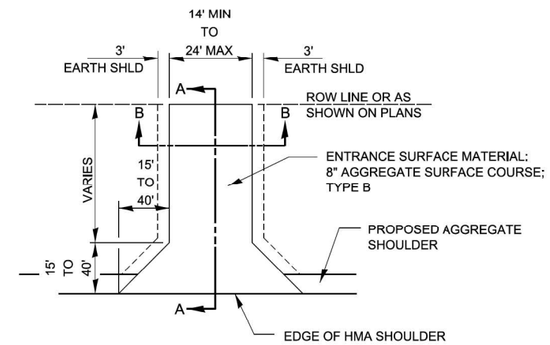

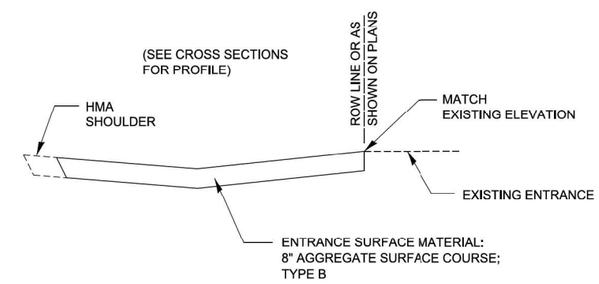

SECTION A-A

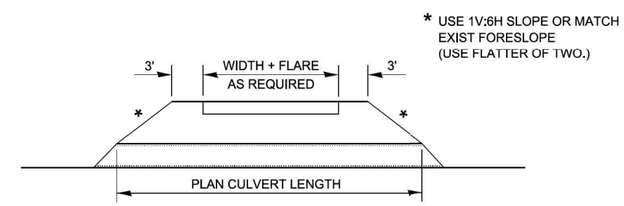

SECTION B-B

FIELD ENTRANCE DETAIL

ALL DIMENSIONS ARE IN INCHES UNLESS OTHERWISE SHOWN.

MODEL: Default
FILE NAME: 2:\22057.12 IDOT D3 PTB 204-028 WO 12 IL 72 o' Owens\DGN\Design\Preliminary\Sheets\D366K63-sht-districdetails.dgn

EFK•Moen Civil Engineering Design	USER NAME = skierpiec	DESIGNED - SK	REVISED -	STATE OF ILLINOIS DEPARTMENT OF TRANSPORTATION	IL 72 OVER OWENS CREEK DISTRICT 3 DETAILS
		DRAWN - SK	REVISED -		
	PLOT SCALE = 100.0000 ' / in.	CHECKED - JH	REVISED -		
	PLOT DATE = 3/12/2025	DATE - 3/12/2025	REVISED -		SCALE: SHEET OF SHEETS STA. TO STA.

F.A.P. RTE.	SECTION	COUNTY	TOTAL SHEETS	SHEET NO.
553	(125BR)ES	DEKALB	96	82
		CONTRACT NO. 66K63		
	ILLINOIS	FED. AID PROJECT		

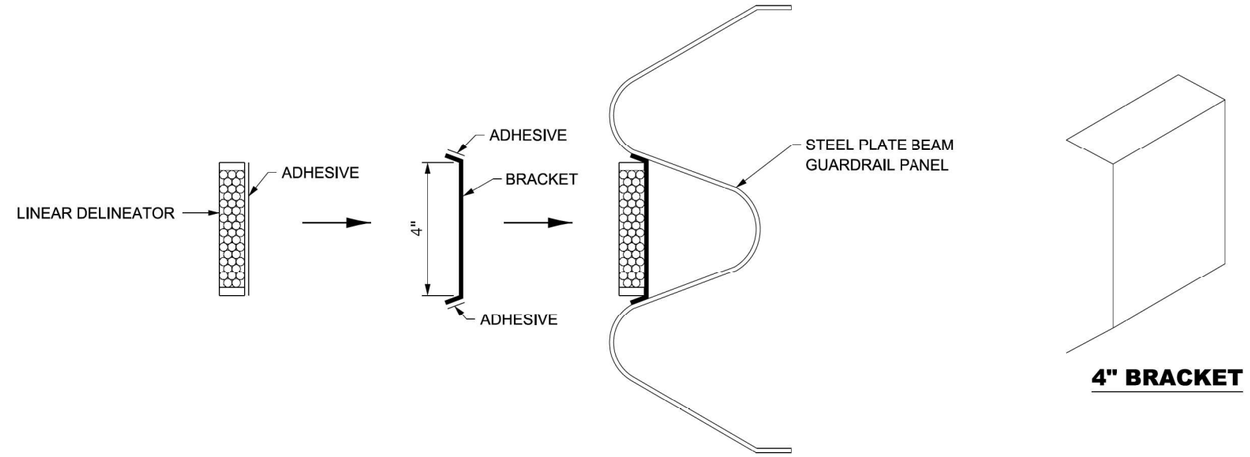

LINEAR DELINEATOR APPLICATION TO STANDARD GALVANIZED GUARDRAIL

LINEATOR DELINEATOR SHALL BE APLLIED ACCORDING TO THE MANUFACTURER'S RECOMMENDATIONS

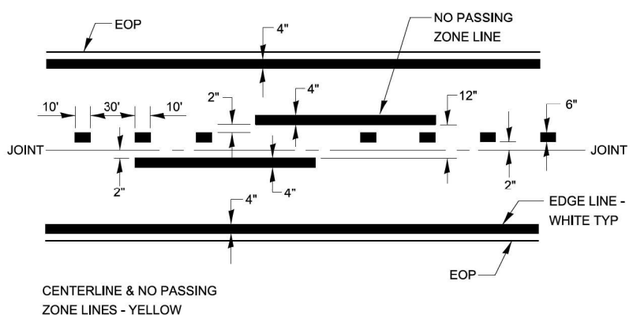

PAVEMENT MARKING

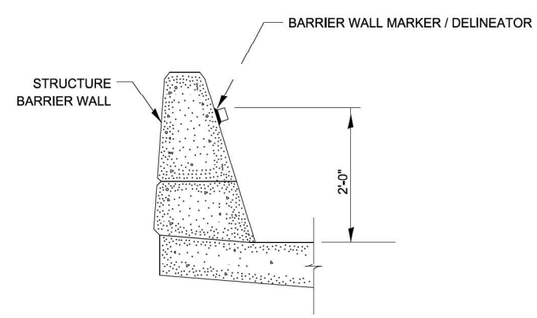

BARRIER WALL MARKER

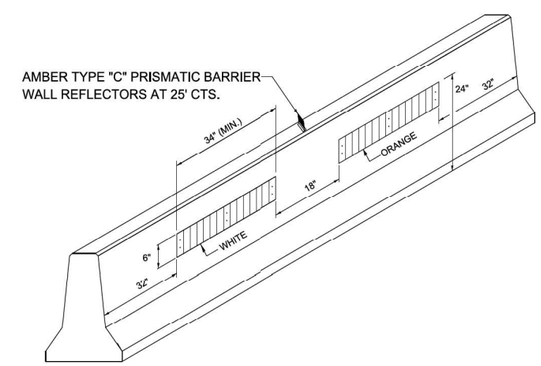

LINEAR DELINEATOR PANELS FOR TEMPORARY CONCRETE BARRIER

MODEL: Default
FILE NAME: Z:\22057_12 IDOT D3 PTB 204-028 WO 12 IL 72 o Owens\DGN\Design\Prelim\Plansheets\0366K63-sht-district-details.dgn

EFK•Moen
Civil Engineering Design

USER NAME = skierpiec	DESIGNED - SK	REVISED -	
	DRAWN - SK	REVISED -	
PLOT SCALE = 100.0000 ' / in.	CHECKED - JH	REVISED -	
PLOT DATE = 3/12/2025	DATE - 3/12/2025	REVISED -	

STATE OF ILLINOIS
DEPARTMENT OF TRANSPORTATION

IL 72 OVER OWENS CREEK
DISTRICT 3 DETAILS

SCALE: SHEET OF SHEETS STA. TO STA.

F.A.P. RTE.	SECTION	COUNTY	TOTAL SHEETS	SHEET NO.
553	(125BR)ES	DEKALB	96	83
		CONTRACT NO. 66K63		
	ILLINOIS	FED. AID PROJECT		

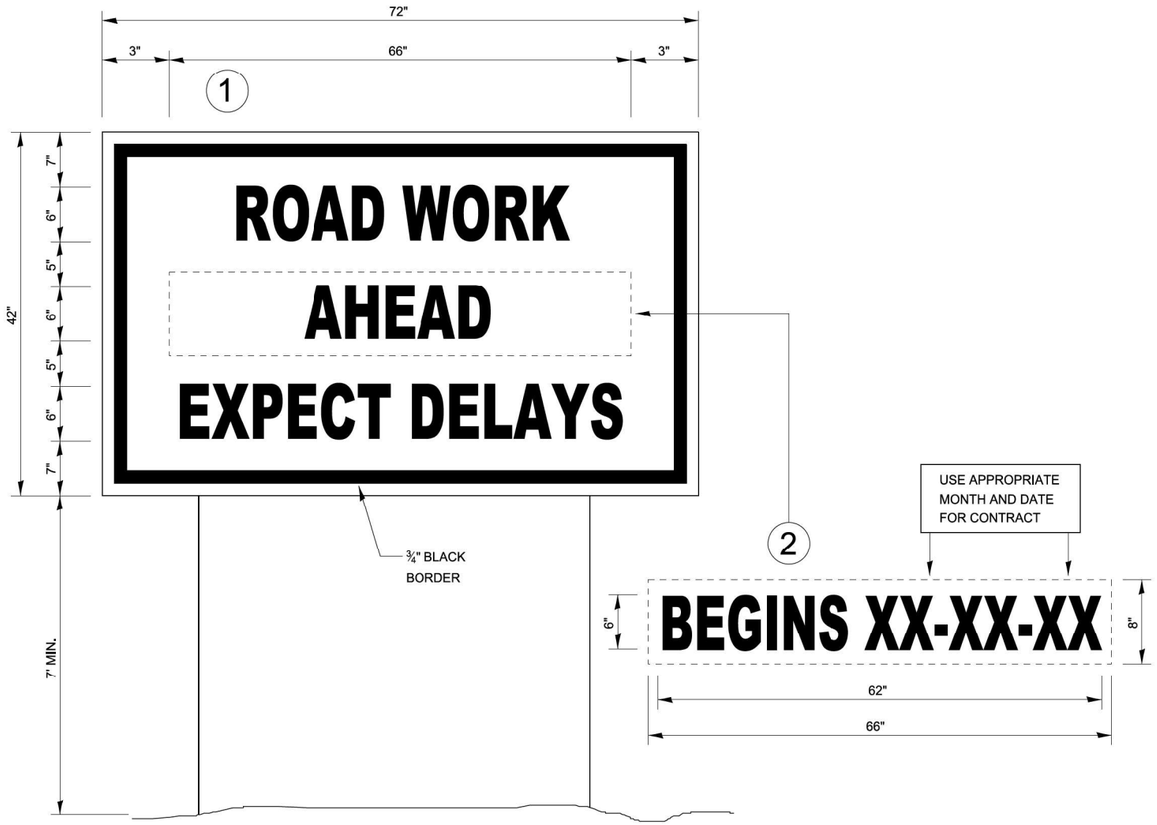

TEMPORARY INFORMATION SIGNING

NOTES:

1. USE 6" D BLACK LETTERING ON FLUORESCENT ORANGE BACKGROUND.
2. ERECT SIGNS AT LOCATIONS IN ADVANCE OF THE "ROAD CONSTRUCTION AHEAD" SIGNS AS DIRECTED BY THE ENGINEER.
3. ERECT SIGN①WITH INSTALLED PANEL②A MINIMUM OF ONE WEEK PRIOR TO THE START OF THE LANE CLOSURE.
4. REMOVE PANEL②ON THAT DATE.
5. SEE SPECIAL PROVISION "TEMPORARY INFORMATION SIGNING" FOR ADDITIONAL INFORMATION.
6. WILL BE PAID FOR PER SQ FT AS "TEMPORARY INFORMATION SIGNING". EACH SIGN = 21 SQ FT AND THE DATE PANEL②WILL NOT BE MEASURED SEPARATELY FOR PAYMENT.

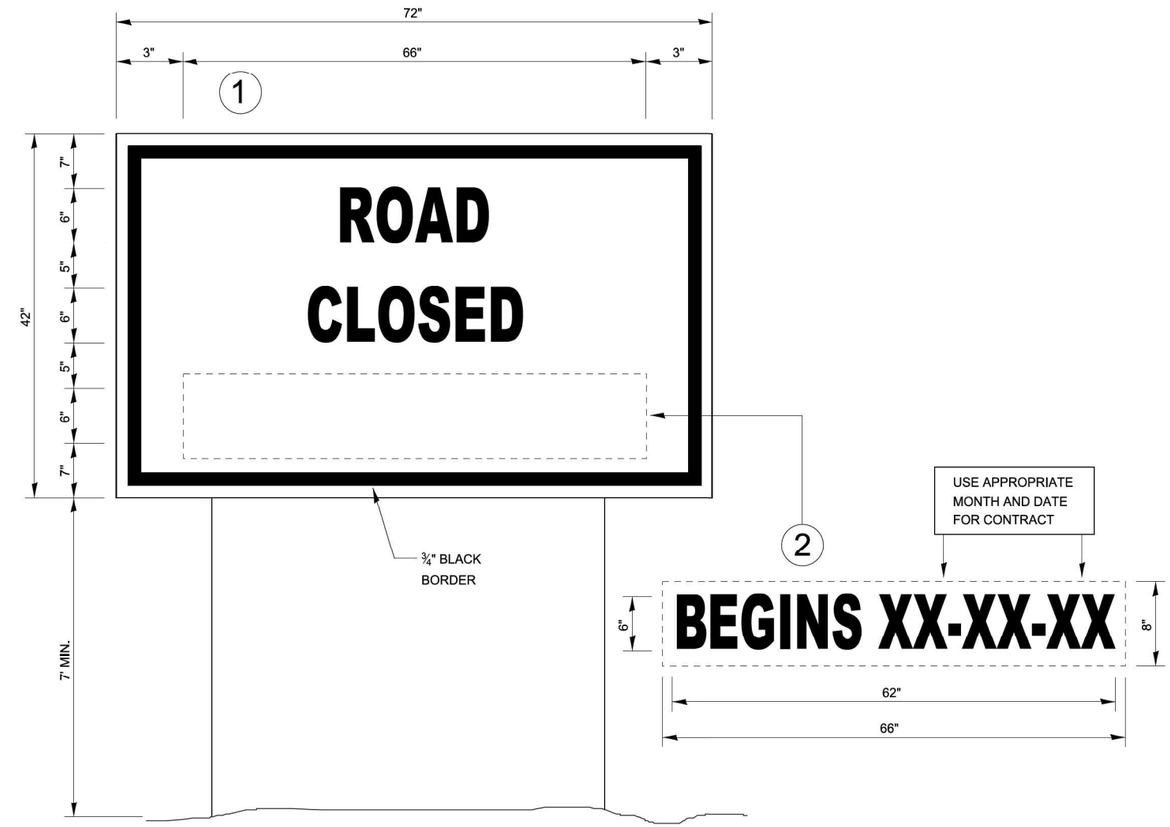

TEMPORARY INFORMATION SIGNING

NOTES:

1. USE 6" D BLACK LETTERING ON FLUORESCENT ORANGE BACKGROUND.
2. ERECT SIGNS AT LOCATIONS IN ADVANCE OF THE "ROAD CONSTRUCTION AHEAD" SIGNS AS DIRECTED BY THE ENGINEER.
3. ERECT SIGN①WITH INSTALLED PANEL②A MINIMUM OF ONE WEEK PRIOR TO THE START OF THE ROAD CLOSURE.
4. REMOVE PANEL②ON THAT DATE.
5. SEE SPECIAL PROVISION "TEMPORARY INFORMATION SIGNING" FOR ADDITIONAL INFORMATION.
6. WILL BE PAID FOR PER SQ FT AS "TEMPORARY INFORMATION SIGNING". EACH SIGN = 21 SQ FT AND THE DATE PANEL②WILL NOT BE MEASURED SEPARATELY FOR PAYMENT.

IDENTIFICATION OF ROADSIDE HAZARDS FOR TWO-LANE ROADWAYS

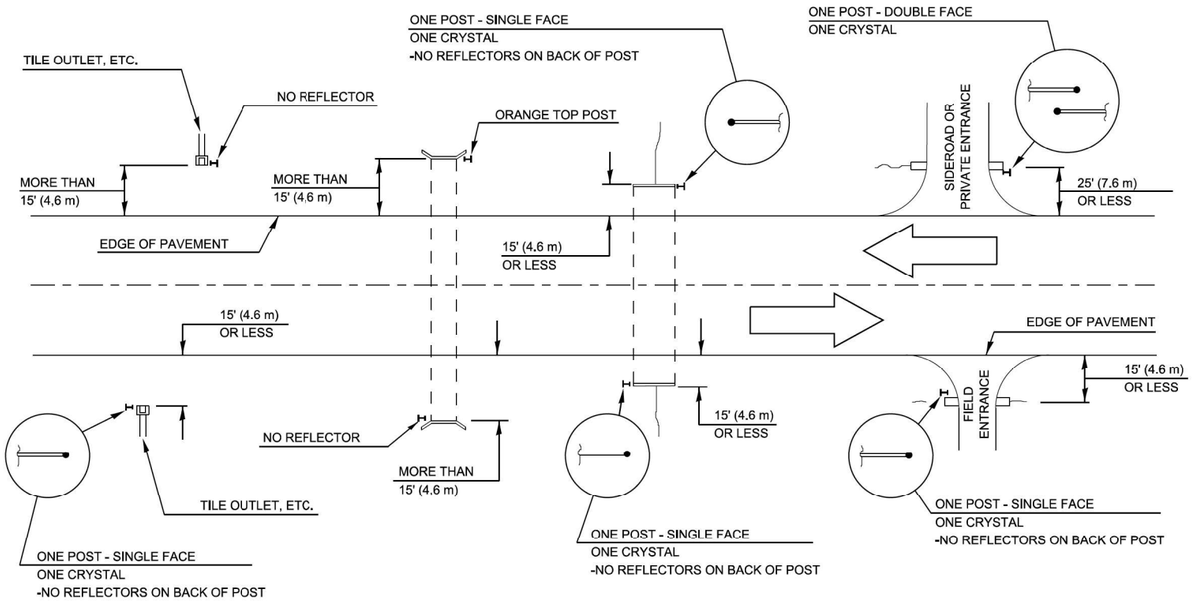

NOTE:

DELINEATORS FOR ROADSIDE HAZARDS SHALL ONLY BE PLACED AT LOCATIONS WHERE THERE IS NO GUARDRAIL, OR OTHER PERMANENT BARRIER, ON THE SAME SIDE OF THE ROAD AS THE HAZZARD.

DELINEATORS FOR ROADSIDE HAZARDS SHALL ONLY BE PLACED AT LOCATIONS WHERE DELINEATORS ARE NOT IN PLACE ALONG THE EDGE OF SHOULDER.

EACH POST SHALL BE CONSIDERED AS ONE DELINEATOR FOR PAYMENT, REGUARDLESS OF THE NUMBER OF DELINEATORS ATTACHED TO IT.

FOR ONE-WAY AND INTERSTATE ROADWAYS THE APPLICATION SHALL BE SIMILAR WITH DELINEATORS PLACED ON THE TRAFFIC APPROACH SIDE OF HAZARDS AND OBJECTS, ONLY SINGLE FACE DELINEATORS WILL BE REQUIRED ON ONE-WAY ROADWAYS, CRYSTAL ON THE RIGHT SIDE AND AMBER ON THE LEFT SIDE.

FOR OTHER DELINEATOR APPLICATIONS, REFER TO HIGHWAY STANDARD 635001.

MODEL: Default
FILE NAME: Z:\22057.12 IDOT D3 PTB 204-028 WO 12 IL 72 O Owens\DGN\Design\Prelim\Plcsheets\0366K63-jht-districtdetails.dgn

EFK•Moen
Civil Engineering Design

USER NAME = skierpiec	DESIGNED - SK	REVISED -	
	DRAWN - SK	REVISED -	
PLOT SCALE = 100.0000 ' / in.	CHECKED - JH	REVISED -	
PLOT DATE = 3/12/2025	DATE - 3/12/2025	REVISED -	

STATE OF ILLINOIS
DEPARTMENT OF TRANSPORTATION

IL 72 OVER OWENS CREEK
DISTRICT 3 DETAILS

SCALE: SHEET OF SHEETS STA. TO STA.

F.A.P. RTE.	SECTION	COUNTY	TOTAL SHEETS	SHEET NO.
553	(125BR)ES	DEKALB	96	85
		CONTRACT NO. 66K63		
	ILLINOIS	FED. AID PROJECT		

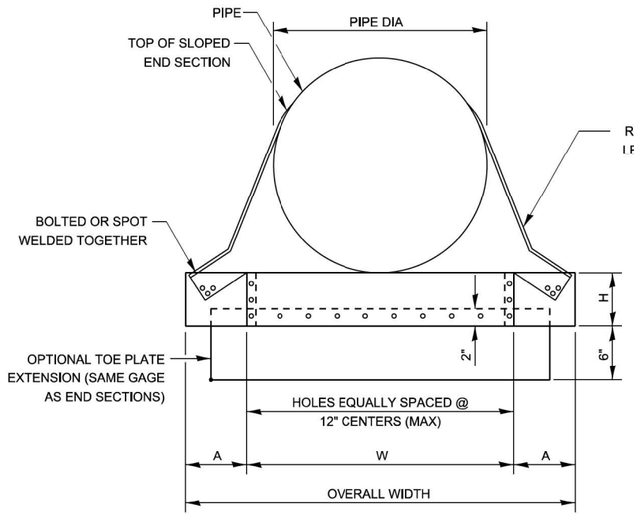

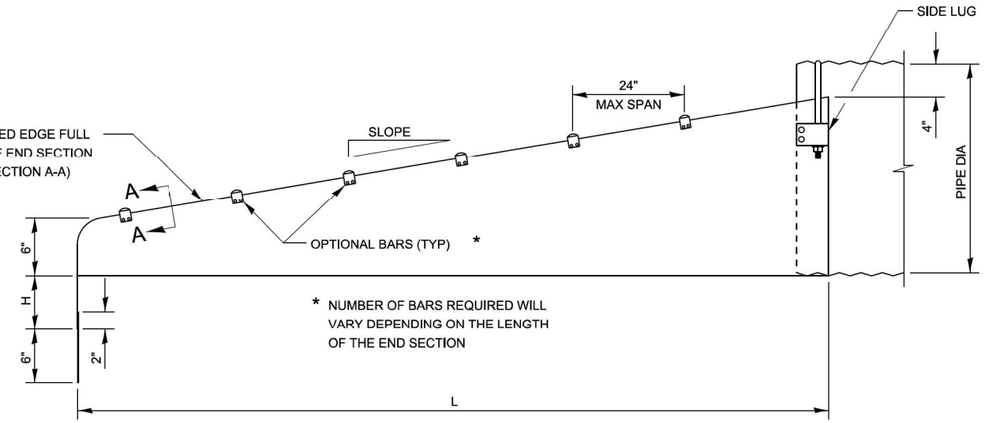

SIDE ELEVATION

GENERAL NOTES

1. CONNECTORS - ROUND SIZES THRU 24" ATTACH TO PIPE WITH TYPE #1 STRAPS, ALL OTHER SIZES ATTACH WITH TYPE #2 RODS AND LUGS.
2. TOE PLATE EXTENSIONS - WHEN REQUIRED, TOE PLATE EXTENSIONS ARE TO BE THE SAME GAGE AS END SECTIONS. DIMENSIONS SHALL BE OVERALL WIDTH LESS 6 INCHES BY 8 INCHES HIGH.
3. OPTIONAL BARS - BARS WHEN SPECIFIED, SHALL BE SCHEDULE 40 GALVANIZED STEEL PIPE.
4. TYPICALLY PARALLEL BARS ARE PLACED ON 24" CENTERS.
5. TYPICALLY THE CROSS BARS ARE USED ON CROSS DRAIN APPLICATIONS.
6. HOLES FOR BAR ATTACHMENTS SHALL BE PROVIDED ON ALL END SECTIONS.
7. DIMENSIONS ARE SUBJECT TO MANUFACTURING TOLERANCES.
8. THESE END SECTIONS WILL BE PAID FOR AT THE CONTRACT UNIT PRICE PER EACH FOR SLOPED METAL END SECTIONS WITH GRATE OF THE DIAMETER SPECIFIED, WHICH SHALL INCLUDE FURNISHING AND INSTALLING THE END SECTION COMPLETE IN PLACE, INCLUDING THE TOE PLATE, EXCAVATING, BACKFILLING, CONNECTING TO THE PIPE, AND CROSS DRAINAGE BARS.

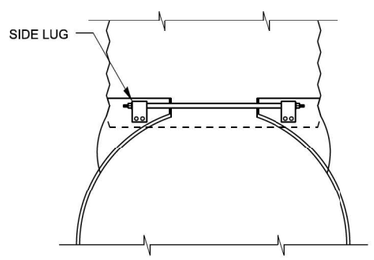

TYPE #2 CONNECTOR DETAIL

TYPE #1 CONNECTOR DETAILS
THRU 24"
GALVANIZED STRAP

TYPE #2 CONNECTOR DETAILS (SHOWN)
FOR 30" AND LARGER
21" x 15" AND LARGER
½" THREADED ROD W/FLANGED
NUT AND SIDE LUG

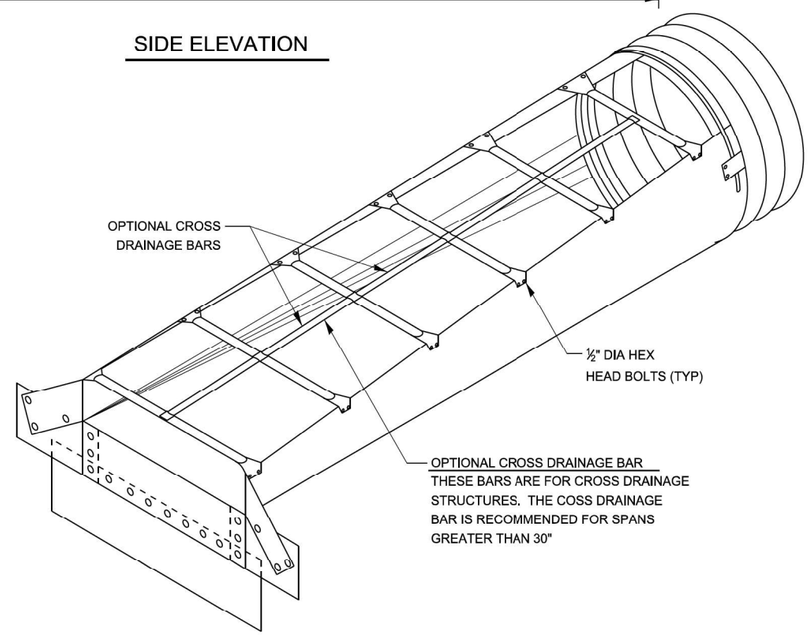

CIRCULAR PIPE ISOMETRIC VIEW

METAL END SECTIONS FOR ROUND PIPE										
PIPE DIA (IN)	MIN THICK		DIMENSIONS (INCHES)				L DIMENSIONS			
	IN	GAGE	A	H	W	OVERALL WIDTH	SLOPE	LENGTH (IN)	SLOPE	LENGTH (IN)
15	.064	16	8	6	21	37	6:1	30	4:1	20
18	.064	16	8	6	24	40	6:1	48	4:1	32
21	.064	16	8	6	27	43	6:1	66	4:1	44
24	.064	16	8	6	30	46	6:1	84	4:1	56
30	.109	12	12	9	36	60	6:1	120	4:1	80
36	.109	12	12	9	42	66	4:1	104	6:1	156
42	.109	12	16	12	48	80	4:1	128	6:1	192
48	.109	12	16	12	54	86	4:1	152	6:1	228
54	.109	12	16	12	60	92	4:1	176	6:1	264
60	.109	12	16	12	66	98	4:1	200	6:1	300

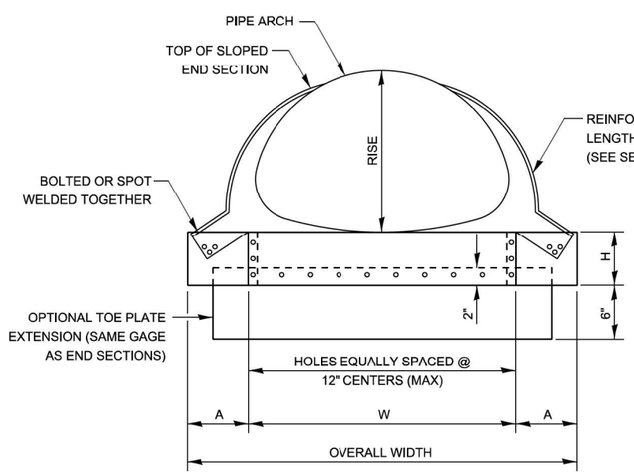

FRONT VIEW PIPE ARCH

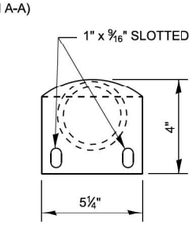

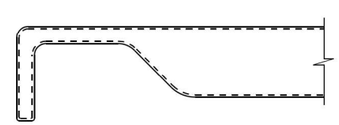

3" GALVANIZED PIPE FLATTEN END, THEN BEND OUTSIDE 4" TO MATCH END SECTION SIDES.

DETAIL OF OPTIONAL BARS

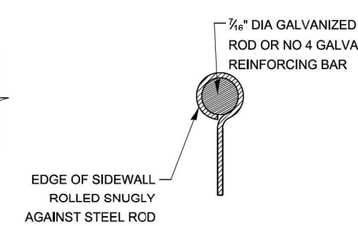

SECTION A-A

METAL END SECTIONS FOR PIPE ARCH												
EQUIV DIA (IN)	(INCHES)		MIN THICK		DIMENSIONS (INCHES)				L DIMENSIONS			
	SPAN	RISE	IN	GAGE	A	H	W	OVERALL WIDTH	SLOPE	LENGTH (IN)	SLOPE	LENGTH (IN)
18	21	15	.064	16	8	6	27	43	6:1	30	4:1	20
21	24	18	.064	16	8	6	30	46	6:1	48	4:1	32
24	28	20	.064	16	8	6	34	50	6:1	60	4:1	40
30	36	24	.079	14	12	9	41	65	6:1	84	4:1	56
36	42	29	.109	12	12	9	48	72	6:1	114	4:1	76
42	49	33	.109	12	16	12	55	87	4:1	92	6:1	138
48	57	38	.109	12	16	12	63	95	4:1	112	6:1	168
54	64	43	.109	12	16	12	70	102	4:1	132	6:1	198
60	71	47	.109	12	16	12	77	109	4:1	148	6:1	222
72	83	57	.109	12	16	12	89	121	4:1	188	6:1	282

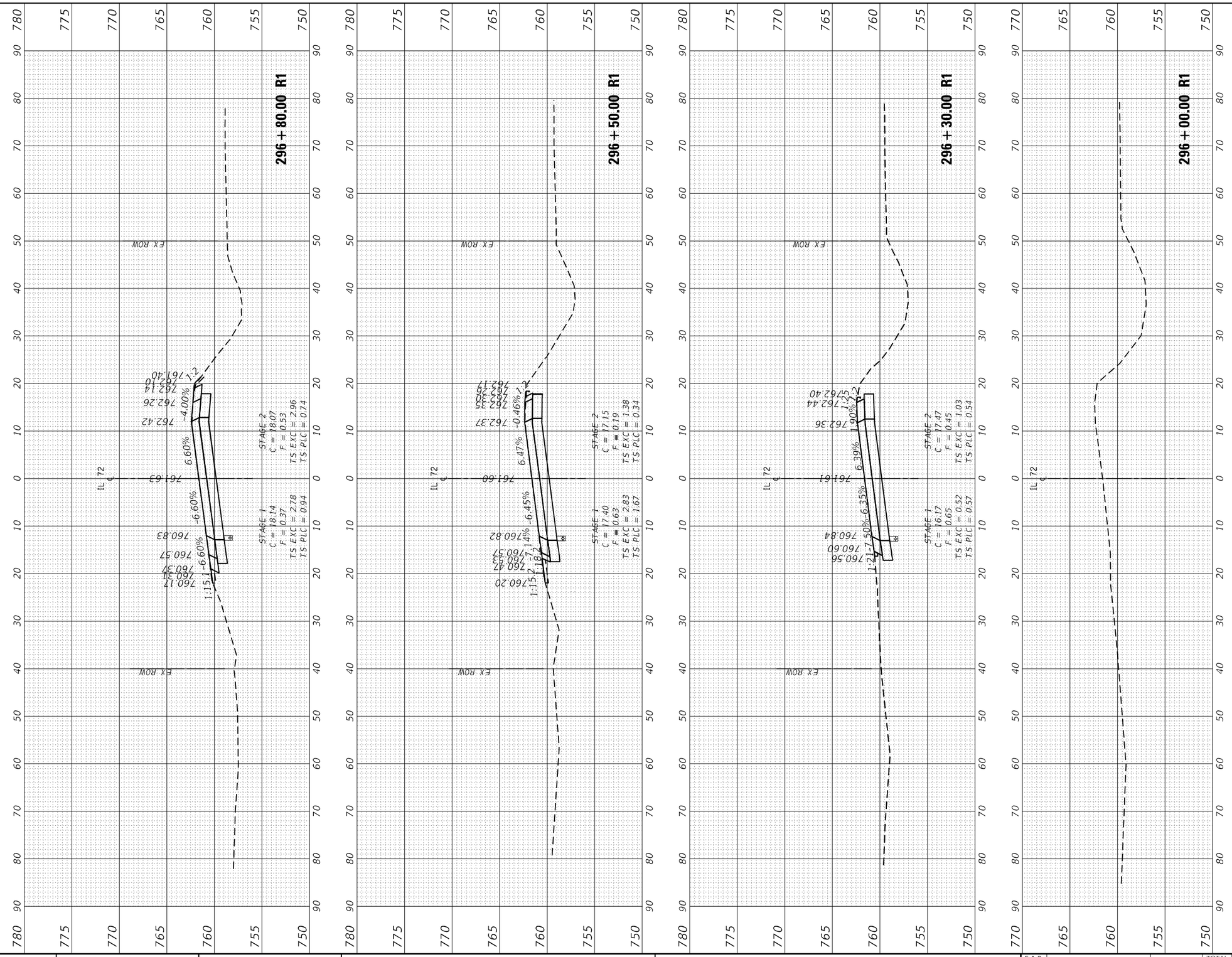

MODEL: EXCI_IL72
FILE NAME: z:\22037.12 IDOT D3 PTB 20-028 WO 12 IL 72 o' Owens\DGN\Design\PrelimRefs\0366K63-Corridor.dgn

EFK♦Moen
Civil Engineering Design

USER NAME = skierpiec	DESIGNED - SK	REVISED -
	DRAWN - SK	REVISED -
PLOT SCALE = 20.0000 ' / in.	CHECKED - JH	REVISED -
PLOT DATE = 3/12/2025	DATE - 3/12/2025	REVISED -

STATE OF ILLINOIS
DEPARTMENT OF TRANSPORTATION

IL 72 OVER OWENS CREEK
CROSS SECTIONS

SCALE: SHEET OF SHEETS STA. TO STA.

F.A.P. RTE.	SECTION	COUNTY	TOTAL SHEETS	SHEET NO.
553	(125BR)ES	DEKALB	96	87
		CONTRACT NO. 66K63		
		ILLINOIS FED. AID PROJECT		

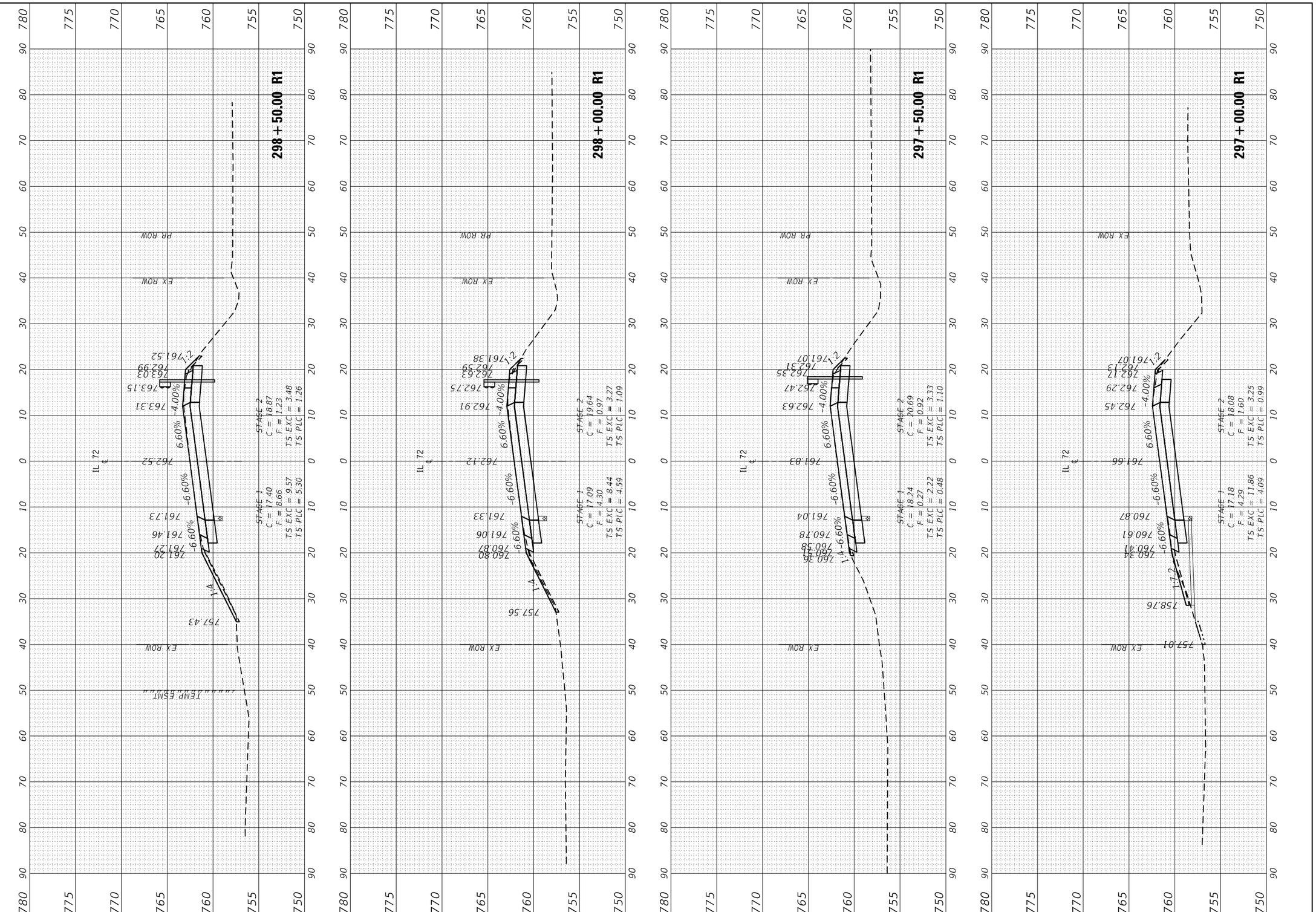

MODEL: EXCL_IL72
FILE NAME: 2:\22037.12 IDOT D3 PTB 204-028 WO 12 IL 72 @ Owens\DGN\Design\PrelimRefs\03666K63-Corridor.dgn

EFK♦Moen
Civil Engineering Design

USER NAME = skierpiec	DESIGNED - SK	REVISED -
	DRAWN - SK	REVISED -
PLOT SCALE = 20.0000 ' / in.	CHECKED - JH	REVISED -
PLOT DATE = 3/12/2025	DATE - 3/12/2025	REVISED -

STATE OF ILLINOIS
DEPARTMENT OF TRANSPORTATION

IL 72 OVER OWENS CREEK
CROSS SECTIONS

SCALE: SHEET OF SHEETS STA. TO STA.

F.A.P. RTE.	SECTION	COUNTY	TOTAL SHEETS	SHEET NO.
553	(125BR)ES	DEKALB	96	88
		CONTRACT NO. 66K63		
	ILLINOIS	FED. AID PROJECT		

MODEL: EXCL_IL72
FILE NAME: Z:\2037-12 IDOT D3 PTB 203-028 WO 12 IL 72 at Owens\DGN\Design\PrelimRefs\D366K63-corridor.dgn

EFK•Moen
Civil Engineering Design

USER NAME = skierpiec	DESIGNED - SK	REVISED -	
	DRAWN - SK	REVISED -	
PLOT SCALE = 20.0000 ' / in.	CHECKED - JH	REVISED -	
PLOT DATE = 3/12/2025	DATE - 3/12/2025	REVISED -	

STATE OF ILLINOIS
DEPARTMENT OF TRANSPORTATION

IL 72 OVER OWENS CREEK
CROSS SECTIONS

SCALE: | SHEET OF SHEETS | STA. TO STA.

F.A.P. RTE.	SECTION	COUNTY	TOTAL SHEETS	SHEET NO.
553	(125BR)ES	DEKALB	96	89

CONTRACT NO. 66K63

ILLINOIS | FED. AID PROJECT

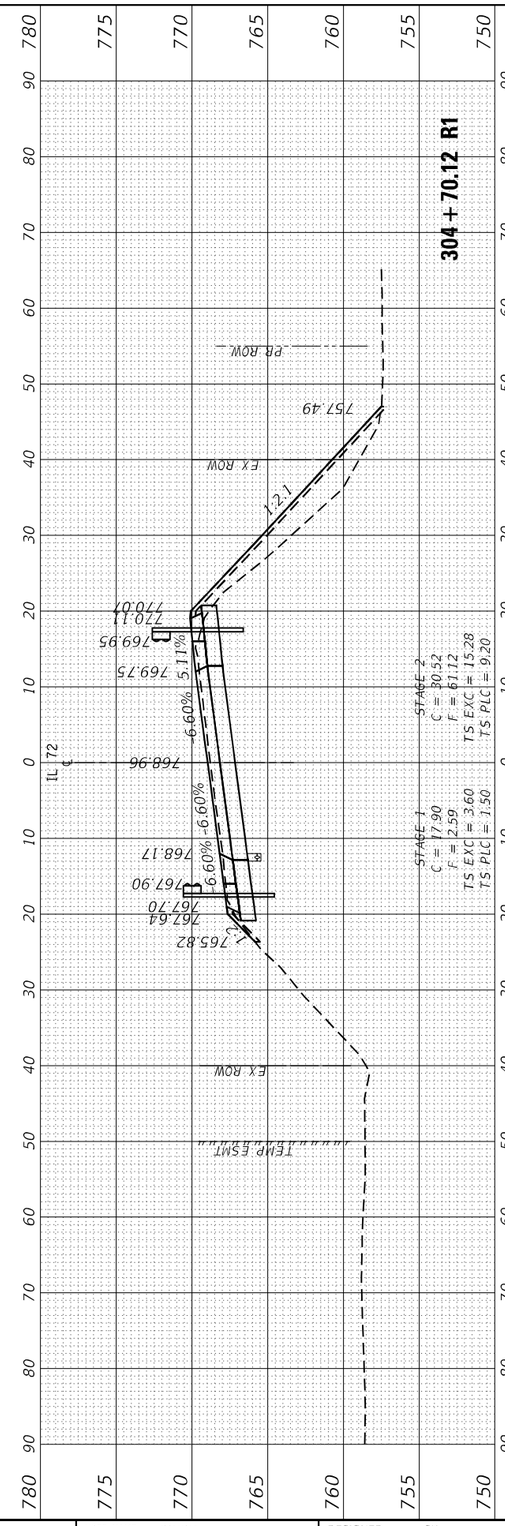

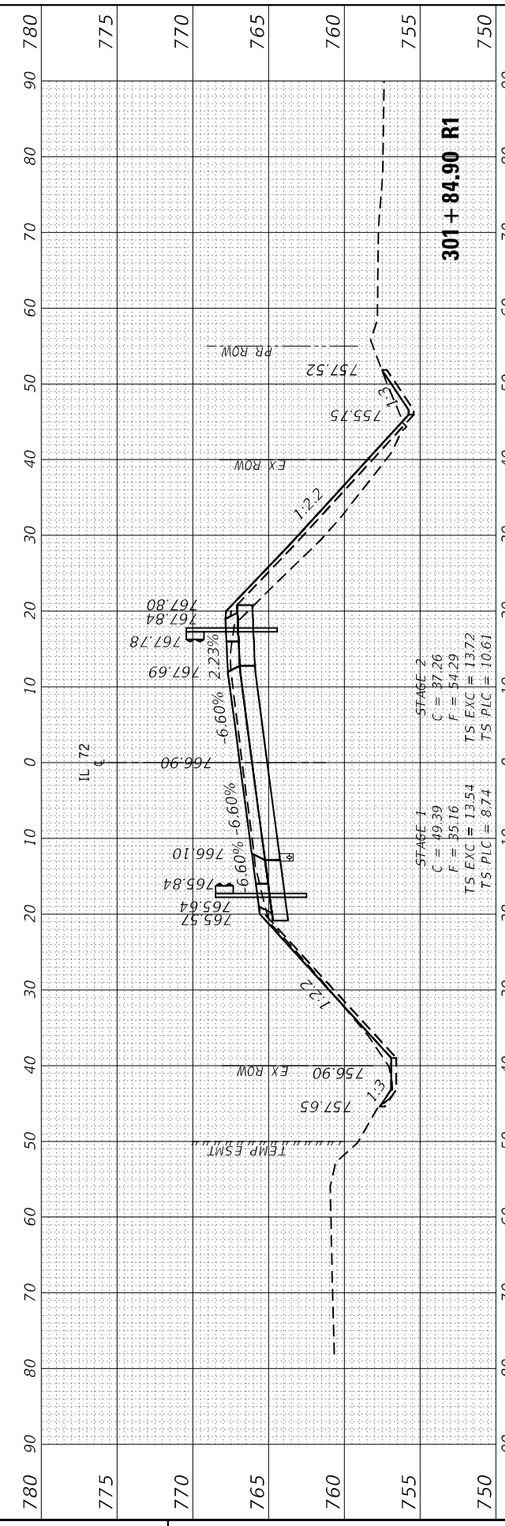

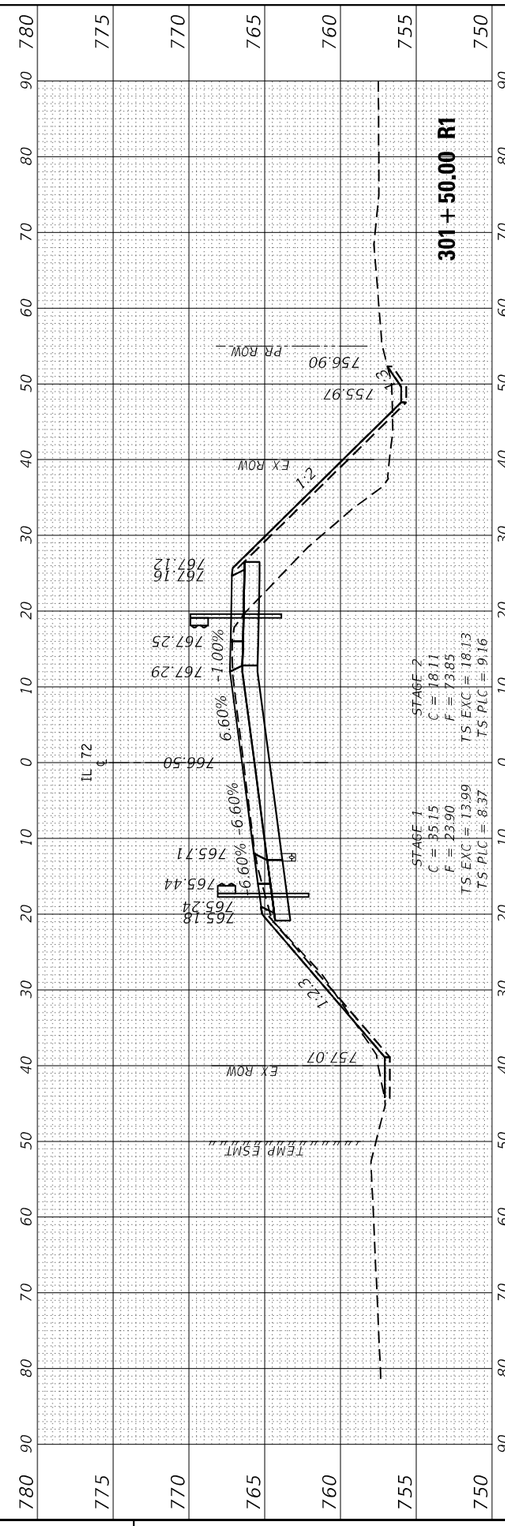

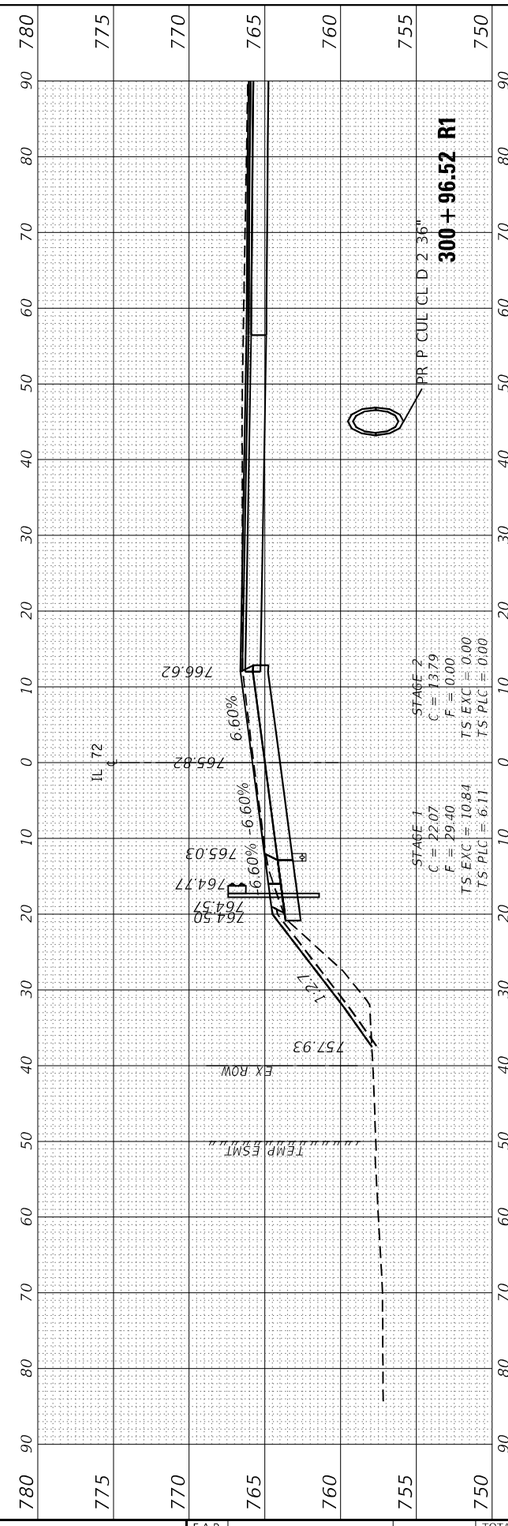

BRIDGE SECTIONS OMITTED
SEE STRUCTURE PLANS

MODEL: EXCL_IL72
FILE NAME: 2:\2037-12 IDOT D3 PTB 204-028 WO 12 IL 72 o' Owens\DGN\Design\PrelimRefs\D366K63-corridor.dgn

EFK•Moen
Civil Engineering Design

USER NAME = skierpiec	DESIGNED - SK	REVISED -	
	DRAWN - SK	REVISED -	
PLOT SCALE = 20.0000 ' / in.	CHECKED - JH	REVISED -	
PLOT DATE = 3/12/2025	DATE - 3/12/2025	REVISED -	

STATE OF ILLINOIS
DEPARTMENT OF TRANSPORTATION

IL 72 OVER OWENS CREEK
CROSS SECTIONS

SCALE: | SHEET OF SHEETS | STA. TO STA.

F.A.P. RTE.	SECTION	COUNTY	TOTAL SHEETS	SHEET NO.
553	(125BR)ES	DEKALB	96	90
		CONTRACT NO. 66K63		
	ILLINOIS	FED. AID PROJECT		

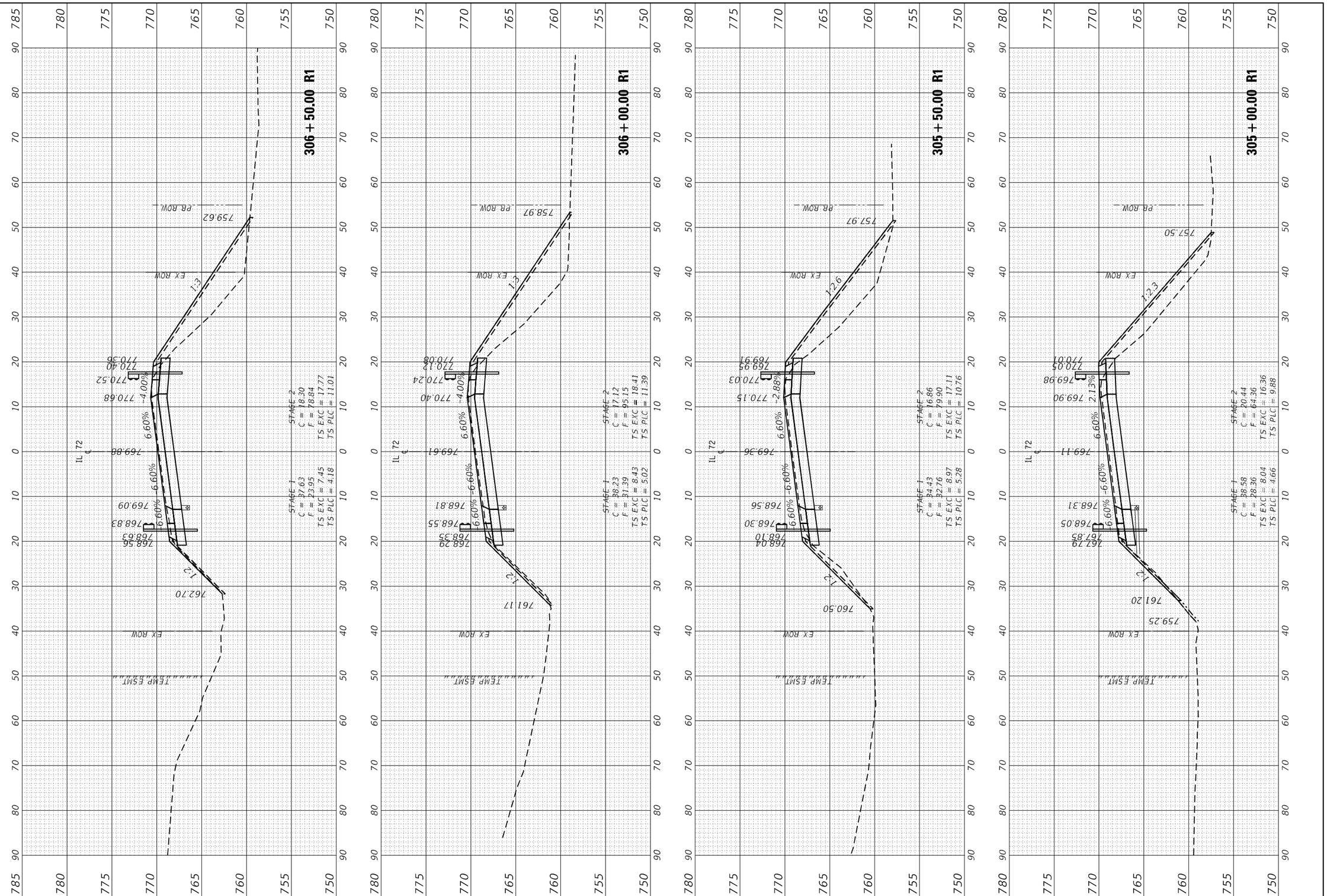

MODEL: EXCL_IL72
FILE NAME: Z:\2037.12 IDOT D3 PTB 203-028 WO 12 IL 72 at Owens\DGN\Design\PrelimRefs\D366K63-Corridor.dgn

EFK•Moen
Civil Engineering Design

USER NAME = skierpiec	DESIGNED - SK	REVISED -	
	DRAWN - SK	REVISED -	
PLOT SCALE = 20.0000 ' / in.	CHECKED - JH	REVISED -	
PLOT DATE = 3/12/2025	DATE - 3/12/2025	REVISED -	

STATE OF ILLINOIS
DEPARTMENT OF TRANSPORTATION

IL 72 OVER OWENS CREEK
CROSS SECTIONS

SCALE: | SHEET OF SHEETS | STA. TO STA.

F.A.P. RTE.	SECTION	COUNTY	TOTAL SHEETS	SHEET NO.
553	(125BR)ES	DEKALB	96	91

CONTRACT NO. 66K63

ILLINOIS | FED. AID PROJECT

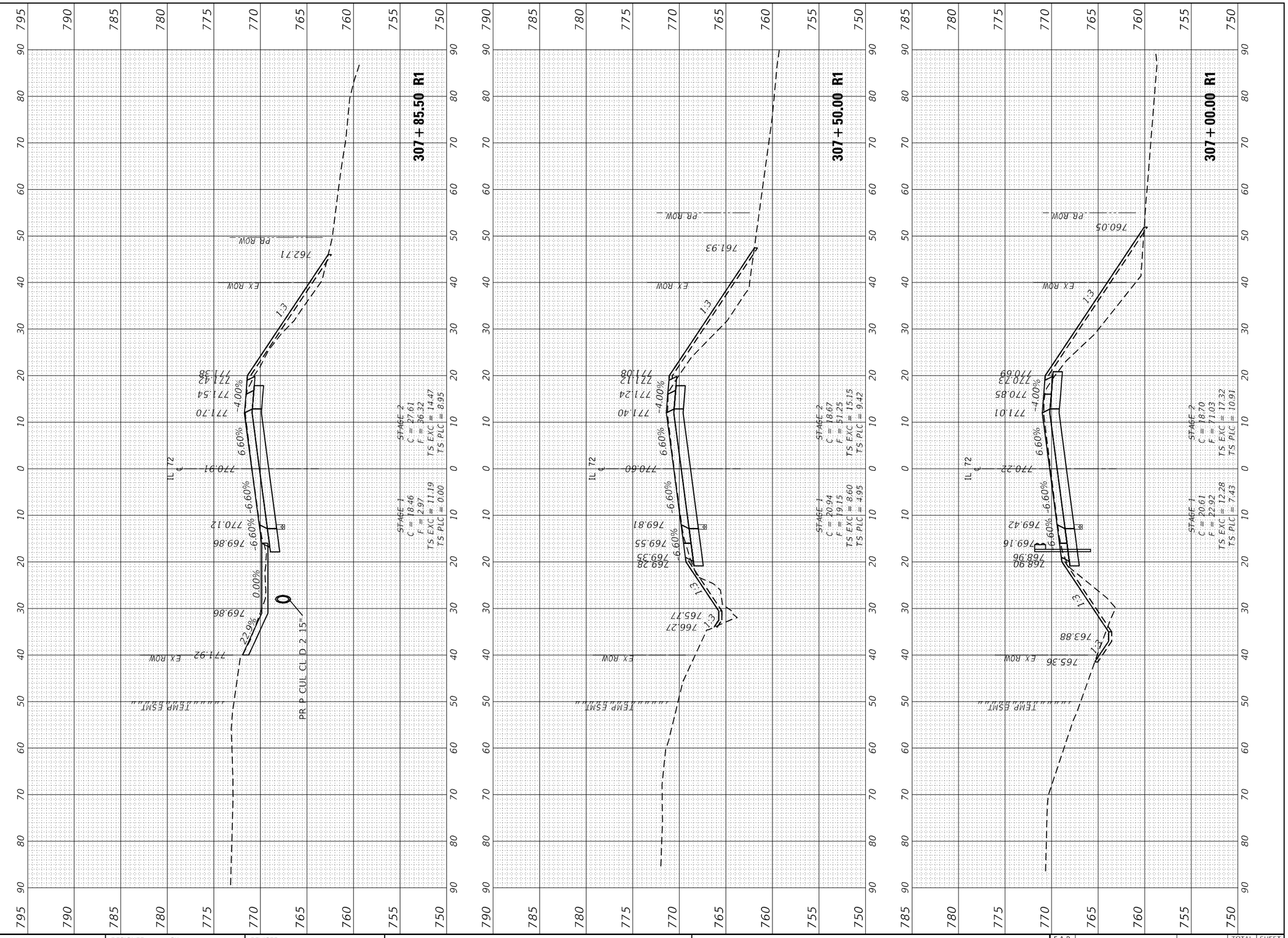

MODEL: EXCL_IL72
FILE NAME: Z:\2037-12 IDOT D3 PTB 203-028 WO 12 IL 72 o' Owens\DGN\Design\PrelimRefs\D366K63-corridor.dgn

EFK•Moen
Civil Engineering Design

USER NAME = skierpiec	DESIGNED - SK	REVISED -	
	DRAWN - SK	REVISED -	
PLOT SCALE = 20.0000 ' / in.	CHECKED - JH	REVISED -	
PLOT DATE = 3/12/2025	DATE - 3/12/2025	REVISED -	

STATE OF ILLINOIS
DEPARTMENT OF TRANSPORTATION

IL 72 OVER OWENS CREEK
CROSS SECTIONS

SCALE: | SHEET OF SHEETS | STA. TO STA.

F.A.P. RTE.	SECTION	COUNTY	TOTAL SHEETS	SHEET NO.
553	(125BR)ES	DEKALB	96	92

CONTRACT NO. 66K63

ILLINOIS | FED. AID PROJECT

MODEL: EXCL_IL72
FILE NAME: 25202S7_12 IDOT D3 PTB 204-028 WO 12 IL 72 o' Owens\DGN\Design\Prelim\Refs\D366K63-Corridor.dgn

EFK♦Moen
Civil Engineering Design

USER NAME = skierpiec	DESIGNED - SK	REVISED -	
	DRAWN - SK	REVISED -	
PLOT SCALE = 20.0000 ' / in.	CHECKED - JH	REVISED -	
PLOT DATE = 3/12/2025	DATE - 3/12/2025	REVISED -	

STATE OF ILLINOIS
DEPARTMENT OF TRANSPORTATION

IL 72 OVER OWENS CREEK
CROSS SECTIONS

SCALE: | SHEET OF SHEETS | STA. TO STA.

F.A.P. RTE.	SECTION	COUNTY	TOTAL SHEETS	SHEET NO.
553	(125BR)ES	DEKALB	96	93
		CONTRACT NO. 66K63		
		ILLINOIS	FED. AID PROJECT	

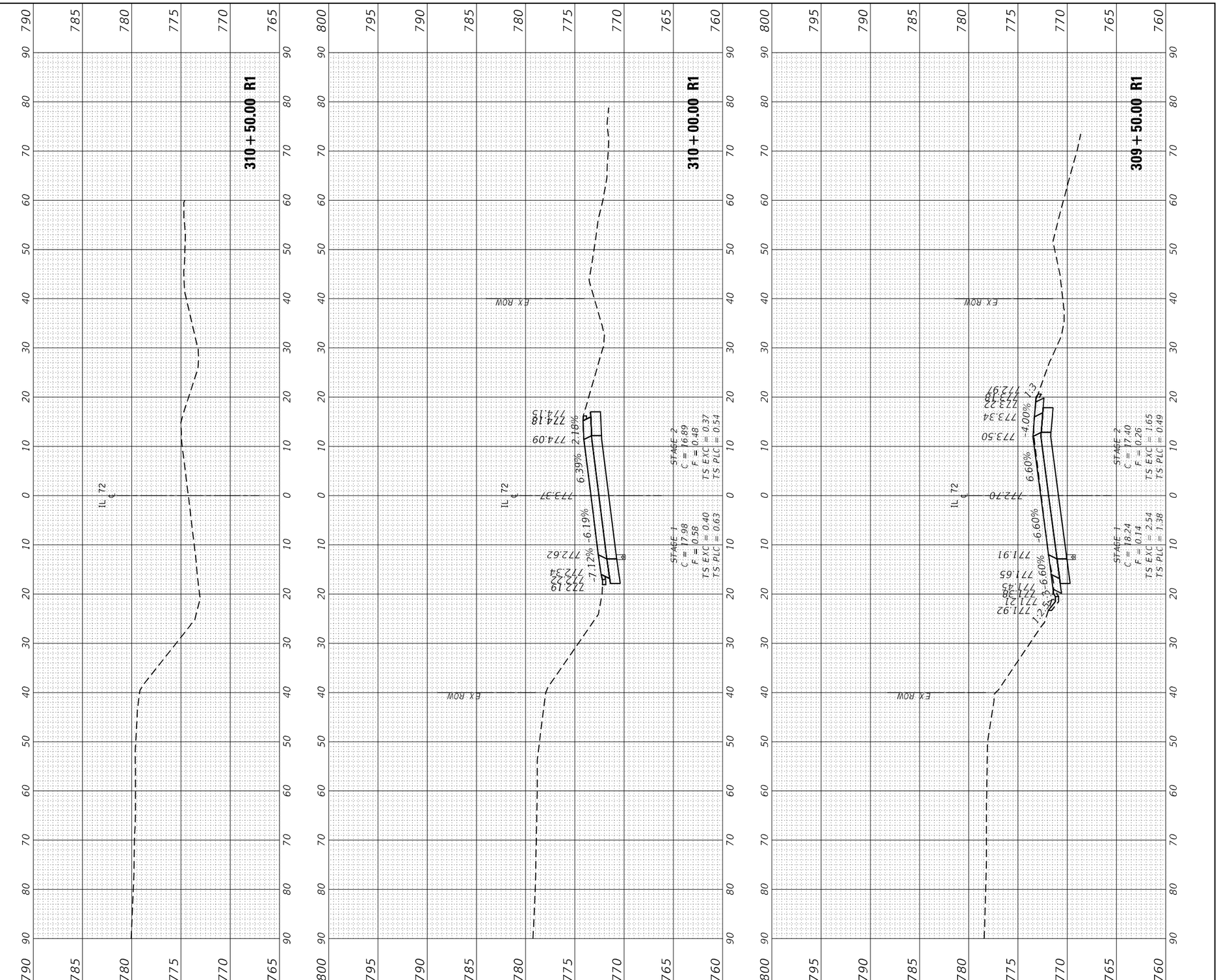

MODEL: EXCI_IL72
FILE NAME: 25220371.12 IDOT D3 PTB 204-028 WO 12 IL 72 o' Owens\DGN\Design\Prelim\Rdwy\0366K63-Corridor.dgn

EFK•Moen
Civil Engineering Design

USER NAME = skierpiec	DESIGNED - SK	REVISED -	
	DRAWN - SK	REVISED -	
PLOT SCALE = 20.0000 ' / in.	CHECKED - JH	REVISED -	
PLOT DATE = 3/12/2025	DATE - 3/12/2025	REVISED -	

STATE OF ILLINOIS
DEPARTMENT OF TRANSPORTATION

IL 72 OVER OWENS CREEK
CROSS SECTIONS

SCALE: | SHEET OF SHEETS | STA. TO STA.

F.A.P. RTE.	SECTION	COUNTY	TOTAL SHEETS	SHEET NO.
553	(125BR)ES	DEKALB	96	94
		CONTRACT NO. 66K63		
		ILLINOIS	FED. AID PROJECT	

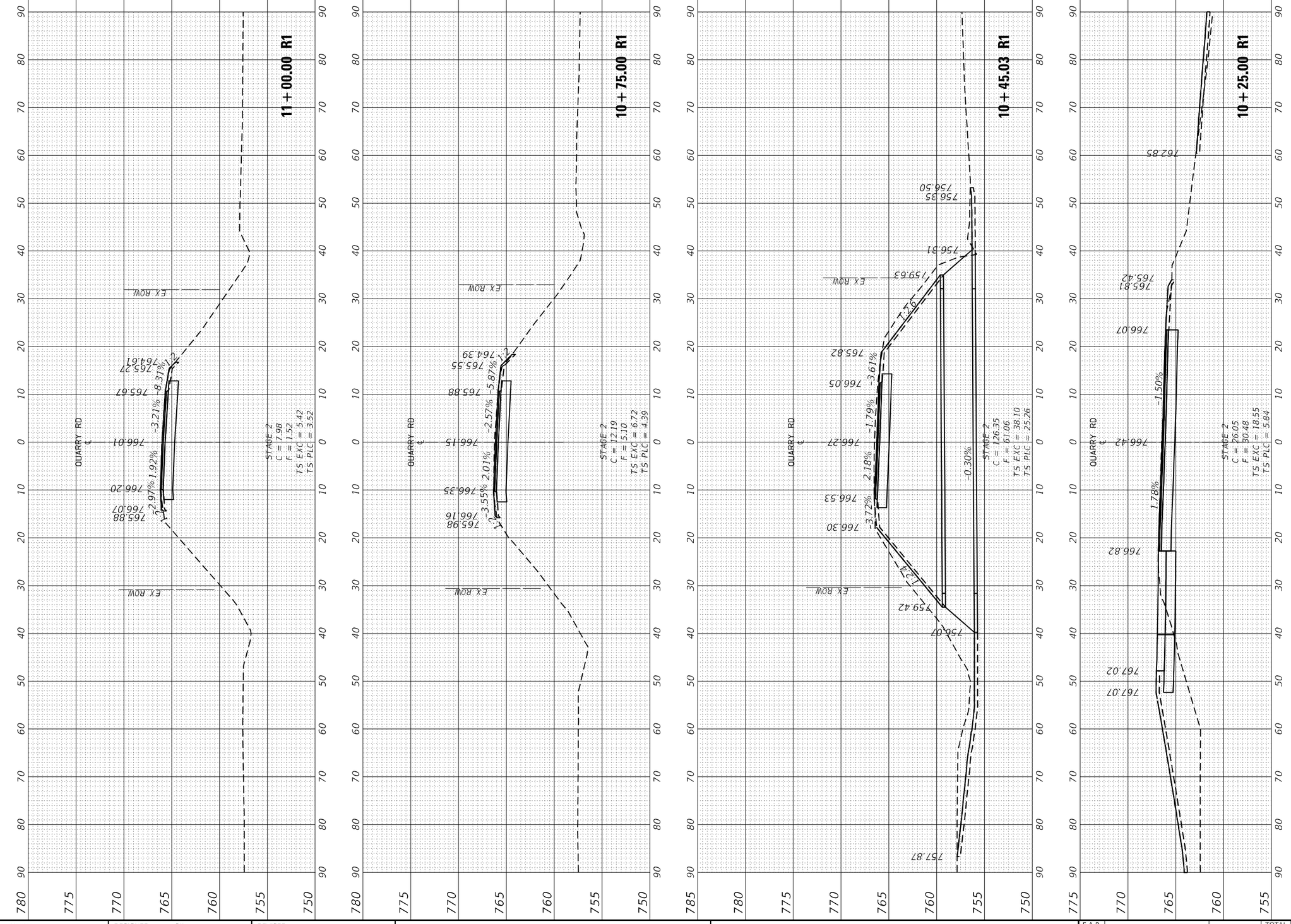

MODEL: EXCL_QUARRY
FILE NAME: Z:\2025\12 IDOT D3 PTB 204-028 WO 12 IL 72 o' Owens\DGN\Design\Prelim\Roh\D366K63-Corridor.dgn

EFK•Moen
Civil Engineering Design

USER NAME = skierpiec	DESIGNED - SK	REVISED -	
	DRAWN - SK	REVISED -	
PLOT SCALE = 20.0000 ' / in.	CHECKED - JH	REVISED -	
PLOT DATE = 3/12/2025	DATE - 3/12/2025	REVISED -	

STATE OF ILLINOIS
DEPARTMENT OF TRANSPORTATION

IL 72 OVER OWENS CREEK
CROSS SECTIONS

SCALE: | SHEET OF SHEETS | STA. TO STA.

F.A.P. RTE.	SECTION	COUNTY	TOTAL SHEETS	SHEET NO.
553	(125BR)ES	DEKALB	96	95
		CONTRACT NO. 66K63		
		ILLINOIS	FED. AID PROJECT	

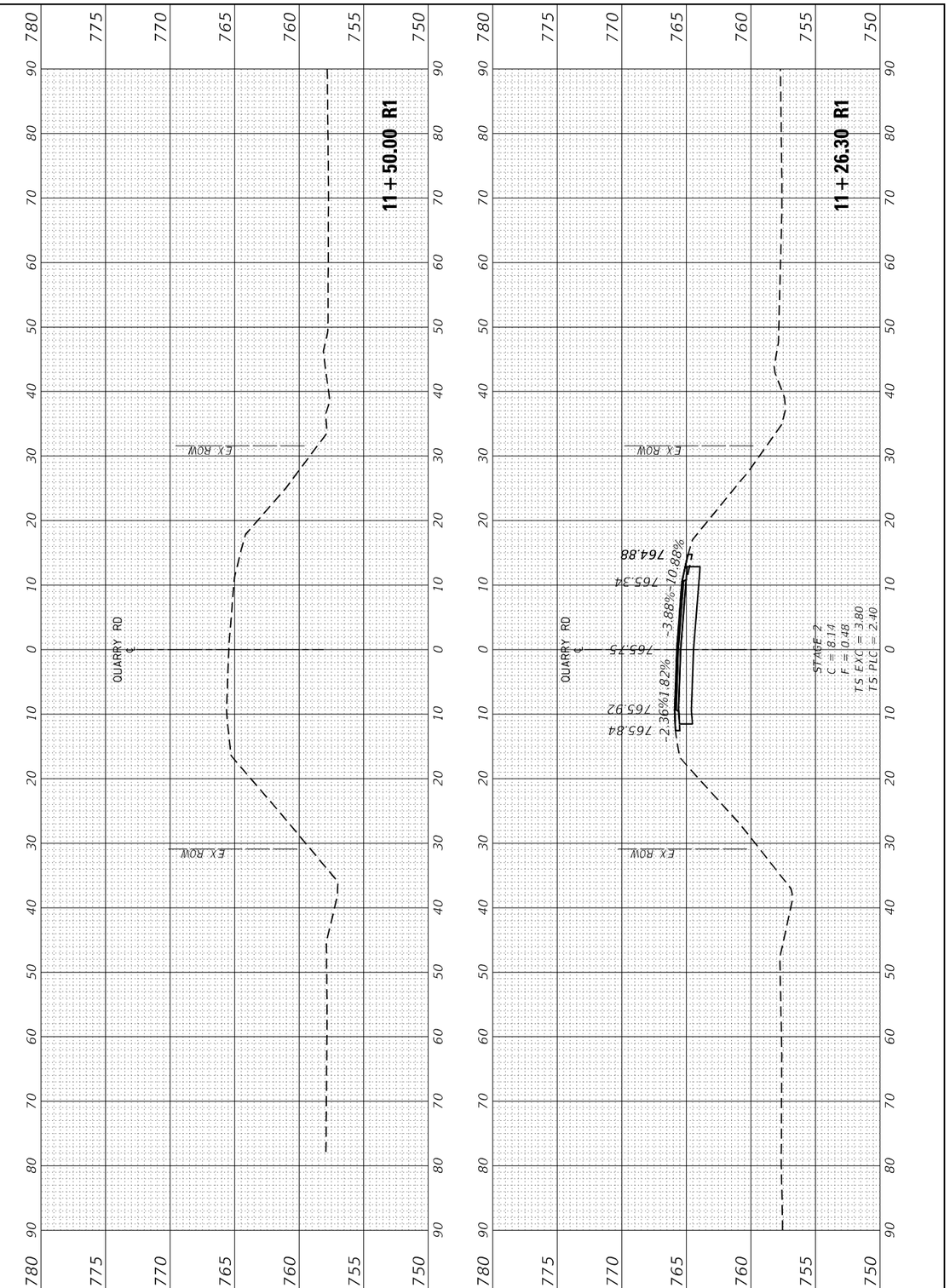

MODEL: EXCL_QUARRY
FILE NAME: 2-72037-12 IDOT D3 PTB 204-028 WO 12 IL 72 o' Owens\DGN\Design\PrelimRefs\0366K63-Corridor.dgn

EFK♦Moen
Civil Engineering Design

USER NAME = skierpiec	DESIGNED - SK	REVISED -	
	DRAWN - SK	REVISED -	
PLOT SCALE = 20.0000 ' / in.	CHECKED - JH	REVISED -	
PLOT DATE = 3/12/2025	DATE - 3/12/2025	REVISED -	

STATE OF ILLINOIS
DEPARTMENT OF TRANSPORTATION

IL 72 OVER OWENS CREEK
CROSS SECTIONS

SCALE: | SHEET OF SHEETS | STA. TO STA.

F.A.P. RTE.	SECTION	COUNTY	TOTAL SHEETS	SHEET NO.
553	(125BR)ES	DEKALB	96	96
		CONTRACT NO. 66K63		
	ILLINOIS	FED. AID PROJECT		