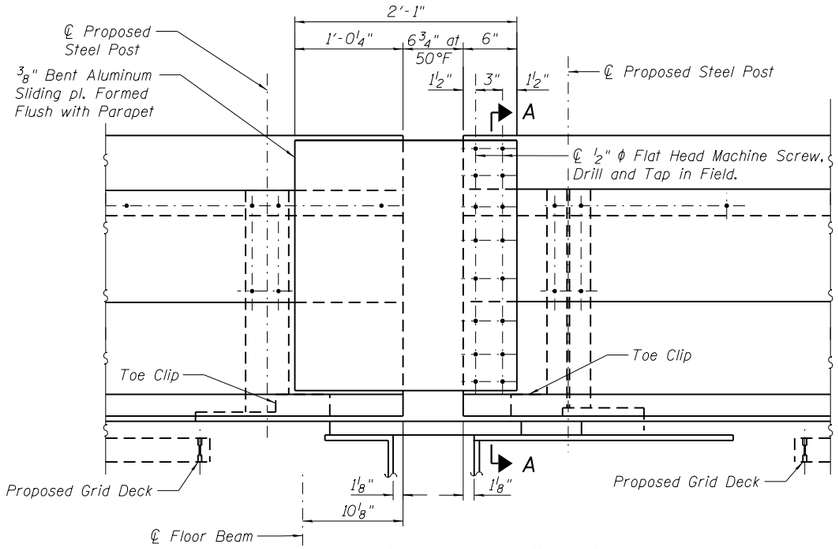

ELEVATION-PARAPET SLIDING PLATE

(Panel Point L22')

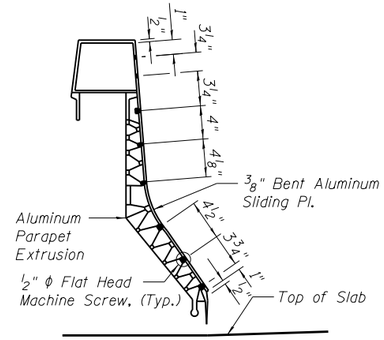

SECTION A-A

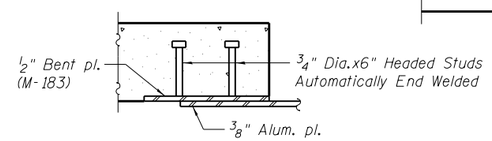

SECTION B-B

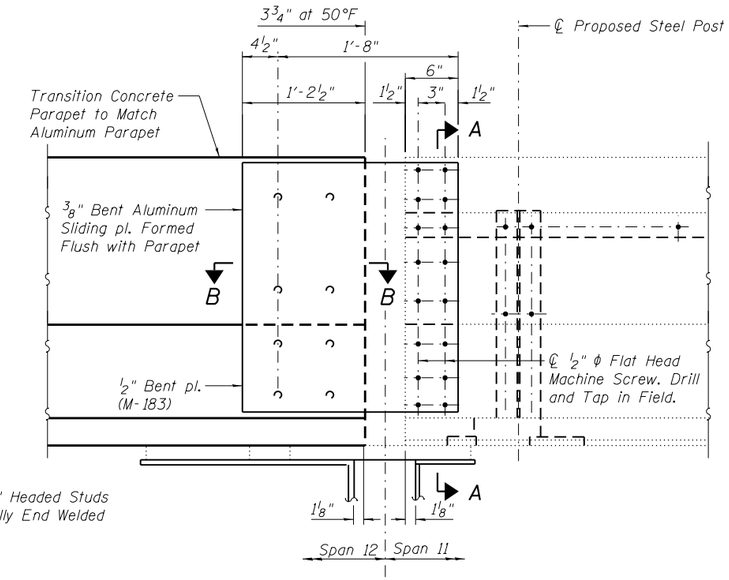

ELEVATION-PARAPET SLIDING PLATE

(Pier 11)

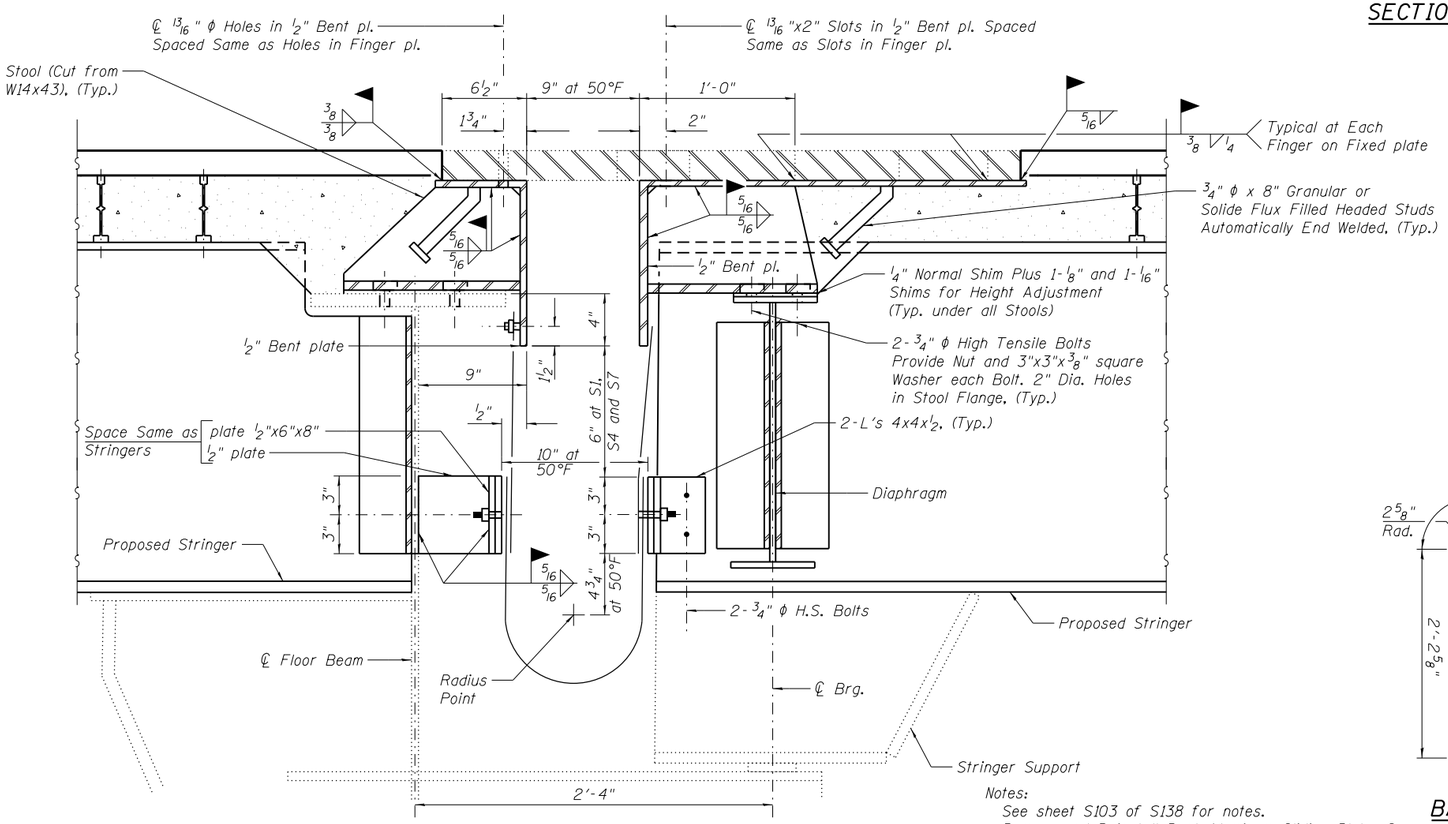

SECTION THRU EXPANSION JOINT AT PANEL POINT L22'

Notes:
See sheet S103 of S138 for notes.
Remove and Reinstall Bent Aluminum Sliding Plate. See Main Span Aluminum Parapet Details.

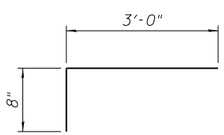

BAR x_1(E)

BILL OF MATERIAL

(All Finger Plate Joint Replacements)

Bar	No.	Size	Length	Shape
d(E)	31	#5	42'-7"	
d_1(E)	34	#6	6'-6"	
d(E)	30	#5	5'-7"	
d_1(E)	30	#5	6'-5"	
x_1(E)	160	#5	3'-8"	
Reinforcement Bars, Epoxy Coated			Pound	2,700
Concrete Superstructure			Cu. Yd.	17.6
Fabric Reinforced Elastomeric Trough			Foot	129
Remove and Reinstall Finger Plate Joint			Each	3

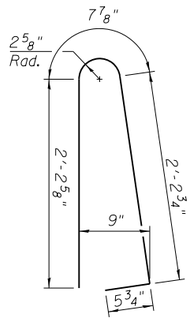

BAR d(E)

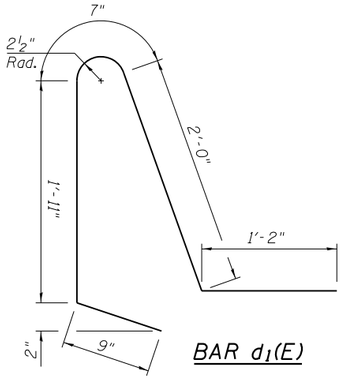

BAR d_1(E)

(Sheet 5 of 5)

LIN ENGINEERING, LTD. Consulting Engineers Springfield, Illinois	USER NAME =	DESIGNED - JJA	REVISED -
	FILE NAME =	CHECKED - TBP	REVISED -
	PLOT SCALE =	DRAWN - AJF	REVISED -
	PLOT DATE = 05/02/2014	CHECKED - VPT	REVISED -

STATE OF ILLINOIS
DEPARTMENT OF TRANSPORTATION

FINGER PLATE JOINT REPAIR
S.N. 082-6001 MLK BRIDGE OVER MISSISSIPPI RIVER
SHEET NO. S105 OF S138 SHEETS

F.A.P. RTE.	SECTION	COUNTY	TOTAL SHEETS	SHEET NO.
799	1BR, DRS-2	ST. CLAIR	156	123
		CONTRACT NO. 76B03		
		ILLINOIS FED. AID PROJECT		