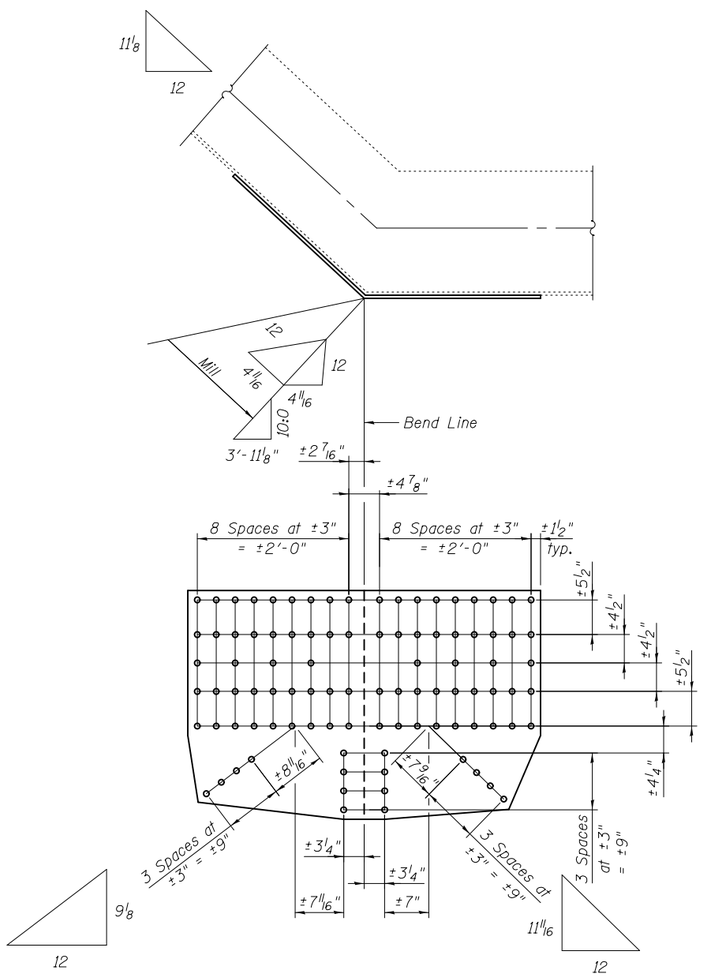

UOS-L1N at L1N; L1N-L2S at L1N

PL 1/2" x 36 3/4" x 4'-7 7/8"

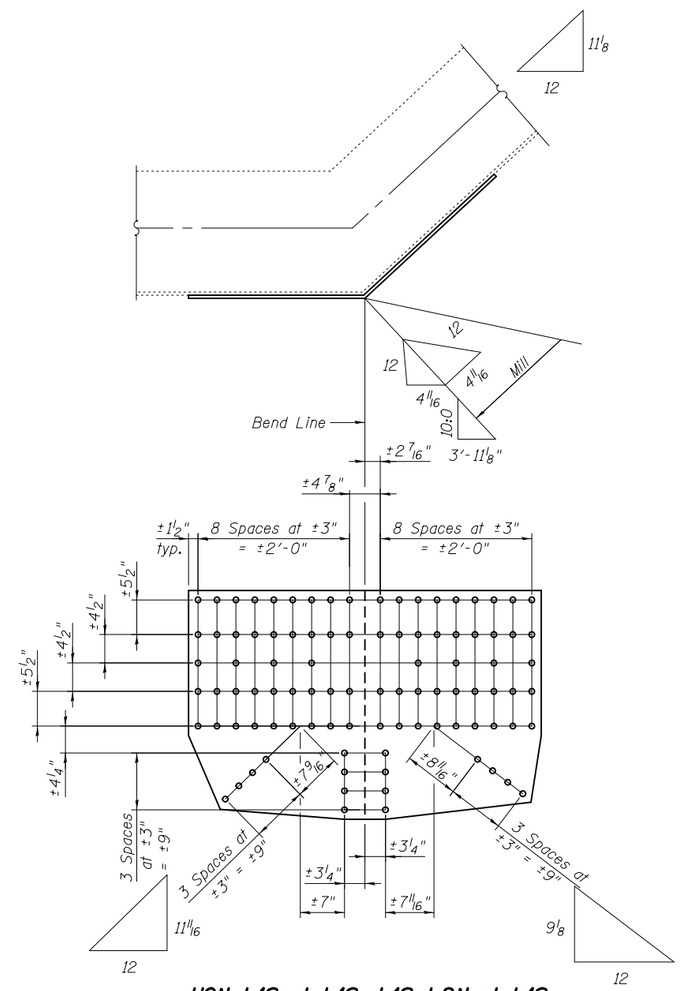

UON-L1S at L1S; L1S-L2N at L1S

PL 1/2" x 36 3/4" x 4'-7 7/8"

SPAN 12

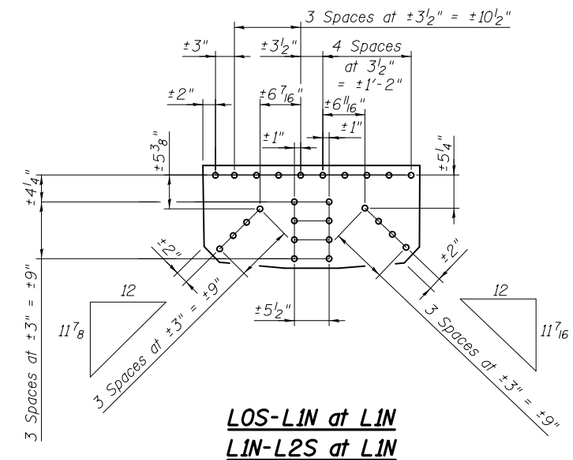

LOS-L1N at L1N
L1N-L2S at L1N

PL 3/8" x 16 1/4" x 2'-10 1/2"

SPAN 13

BILL OF MATERIAL

Item	Unit	Total
Structural Steel Repair	Pound	1590

Note:
Field drill holes using existing holes as template.

USER NAME =	DESIGNED - CDB	REVISED	
	CHECKED - AEC	REVISED	
PLOT SCALE =	DRAWN - AEC	REVISED	
PLOT DATE = 03/20/2014	CHECKED - CDB	REVISED	

MODJESKI and MASTERS
Experience great bridges.

STATE OF ILLINOIS
DEPARTMENT OF TRANSPORTATION

ILLINOIS APPROACH BOTTOM LATERAL CONNECTION PLATE REPLACEMENTS SPANS 12 AND 13
S.N. 082-6001 MLK BRIDGE OVER MISSISSIPPI RIVER

SHEET NO. S85 OF S138 SHEETS

F.A.P. RTE.	SECTION	COUNTY	TOTAL SHEETS	SHEET NO.
799	1BR, DRS-2	ST. CLAIR	156	103
		CONTRACT NO. 76B03		
	ILLINOIS	FED. AID PROJECT		