PAVEMENT MARKINGS AT RAILROAD-HIGHWAY GRADE CROSSING

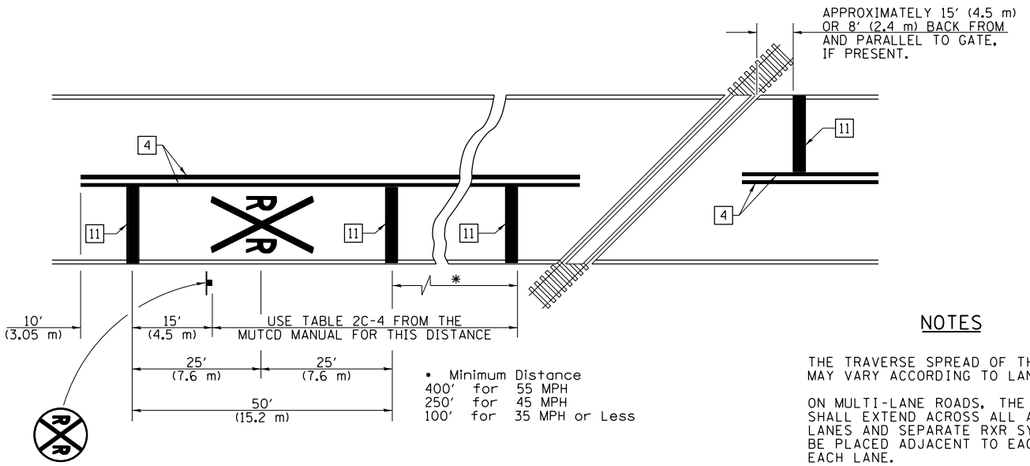

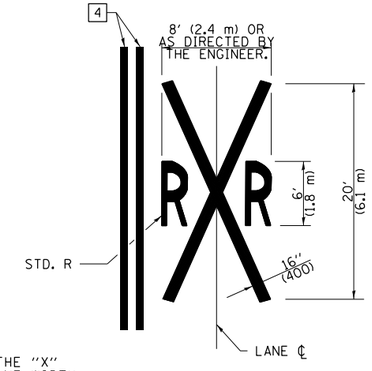

NOTES

THE TRAVERSE SPREAD OF THE "X" MAY VARY ACCORDING TO LANE WIDTH.

ON MULTI-LANE ROADS, THE STOP LINES SHALL EXTEND ACROSS ALL APPROACH LANES AND SEPARATE RXR SYMBOLS SHALL BE PLACED ADJACENT TO EACH OTHER IN EACH LANE.

WHEN THE PAVEMENT MARKING SYMBOL IS USED, A PORTION OF THE SYMBOL SHOULD BE LOCATED DIRECTLY ADJACENT TO THE ADVANCE WARNING SIGN (W10-1) AS PLACED BY TABLE II-1, CONDITION B OF THE MUTCD.

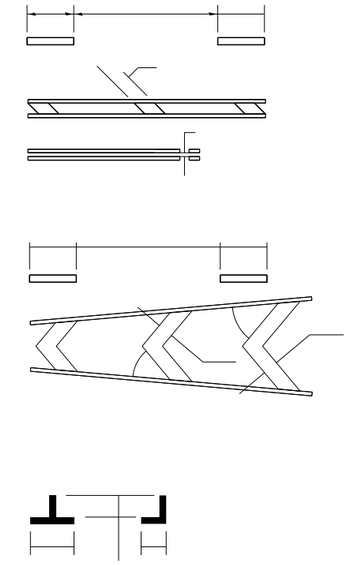

RAILROAD CROSSING WITH INTERCONNECT ONLY

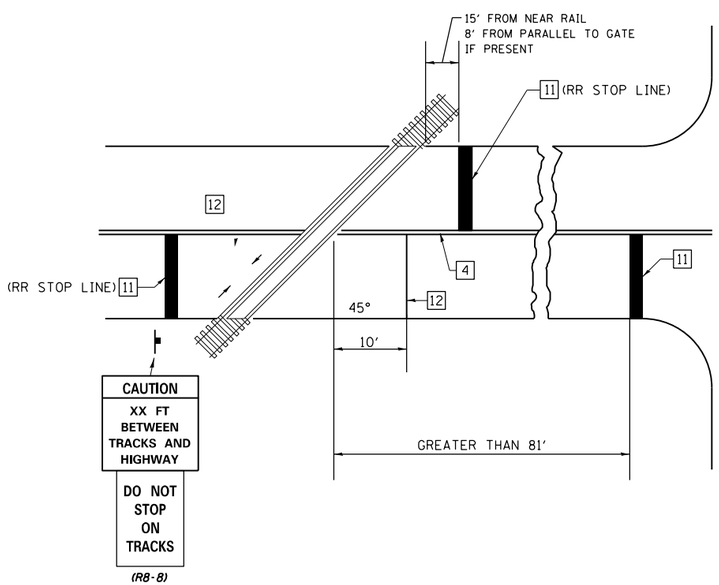

RAILROAD CROSSING WITH INTERCONNECT AND PRE-SIGNALS

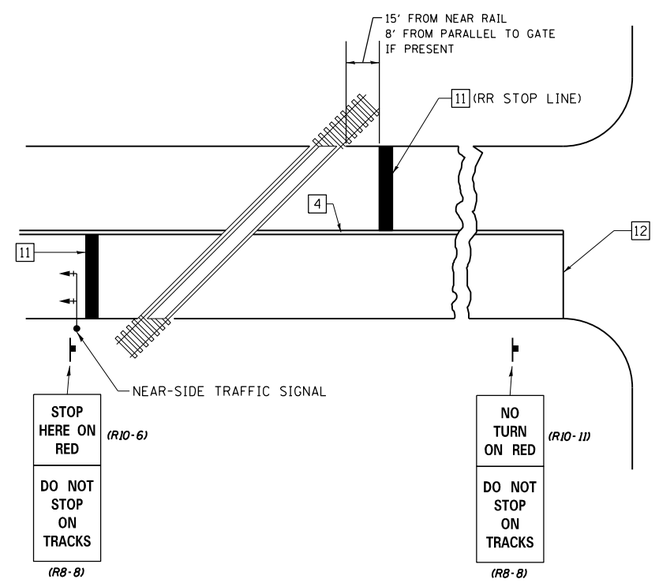

SUPPLEMENTAL PAVEMENT MARKING TREATMENT FOR RAILROAD-HIGHWAY GRADE CROSSING

GENERAL NOTES

NOT TO SCALE

Note: All dimensions are in INCHES (millimeters) unless otherwise shown.

DISTRICT 7 DETAIL NO. 78000001

FILE NAME = c:\pw_work\pwidot\steffenmk\d0384918\D774670-sht-details.dgn	USER NAME = steffenmk	DESIGNED -	REVISED -
		DRAWN -	REVISED -
	PLOT SCALE = 100.0000 ′ / in.	CHECKED -	REVISED -
	PLOT DATE = 4/1/2014	DATE -	REVISED -

STATE OF ILLINOIS
DEPARTMENT OF TRANSPORTATION

PAVEMENT MARKING AND RAISED REFLECTIVE PAVEMENT MARKERS (RURAL & URBAN APPLICATIONS)

SCALE: | SHEET NO. 4 OF 4 SHEETS | STA. | TO STA.

F.A.P. RTE.	SECTION	COUNTY	TOTAL SHEETS	SHEET NO.
320	D7 HMA RESURF 2015-4	MOULTRIE	17	17
		CONTRACT NO. 74670		
		ILLINOIS FED. AID PROJECT		