DETAIL FOR I–39 BUTT JOINTS AND PAVING TRANSITIONS

	Ⓐ STATION	NORTHBOUND TO	Ⓑ STATION
APPROACH SN 057-0211	291+36.00		288+90.00

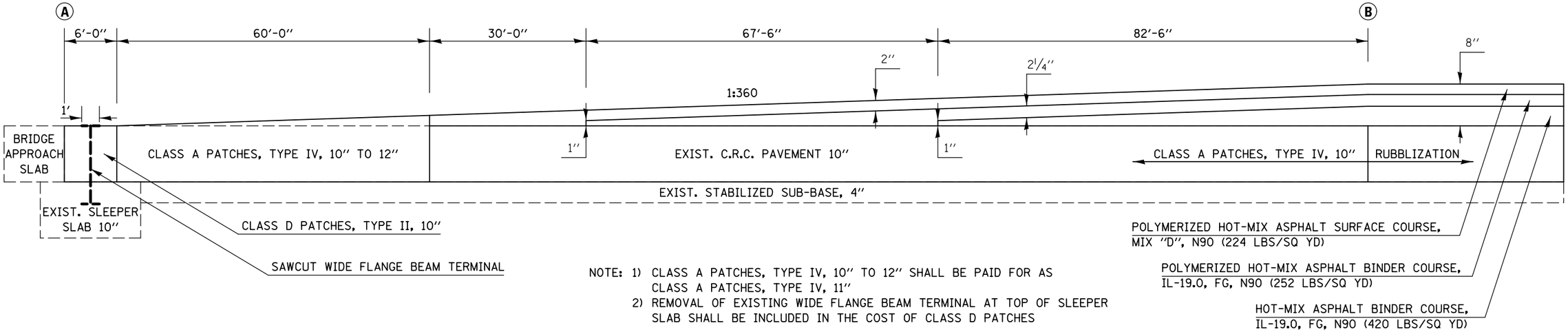

NOTE: 1) CLASS A PATCHES, TYPE IV, 10" TO 12" SHALL BE PAID FOR AS CLASS A PATCHES, TYPE IV, 11"
2) REMOVAL OF EXISTING WIDE FLANGE BEAM TERMINAL AT TOP OF SLEEPER SLAB SHALL BE INCLUDED IN THE COST OF CLASS D PATCHES

DETAIL FOR I–39 SHOULDER BUTT JOINTS AND PAVING TRANSITIONS

	Ⓐ STATION	NORTHBOUND TO	Ⓑ STATION
APPROACH SN 057-0211	291+36.00		288+90.00

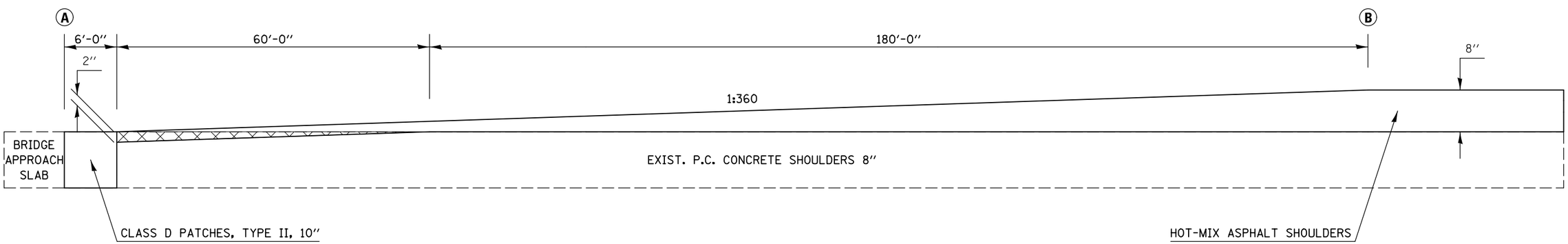

PORTLAND CEMENT CONCRETE SURFACE REMOVAL - BUTT JOINT

FILE NAME = c:\pw_work\pwidot\bergenaj\d0373050\D570A28-SHT-DETAILS.dgn	USER NAME = bergenaj	DESIGNED - AJB	REVISED -
		DRAWN - AJB 6/21/2012	REVISED -
	PLOT SCALE = 40.0000 ' / in.	CHECKED -	REVISED -
	PLOT DATE = 3/18/2014	DATE -	REVISED -

STATE OF ILLINOIS
DEPARTMENT OF TRANSPORTATION

MILLING AND PAVING TRANSITION DETAILS

SCALE: | SHEET 4 OF 9 SHEETS | STA. TO STA.

F.A.I. RTE.	SECTION	COUNTY	TOTAL SHEETS	SHEET NO.
39	57(2,3)R	McLean	214	65

CONTRACT NO. 70A28

ILLINOIS FED. AID PROJECT