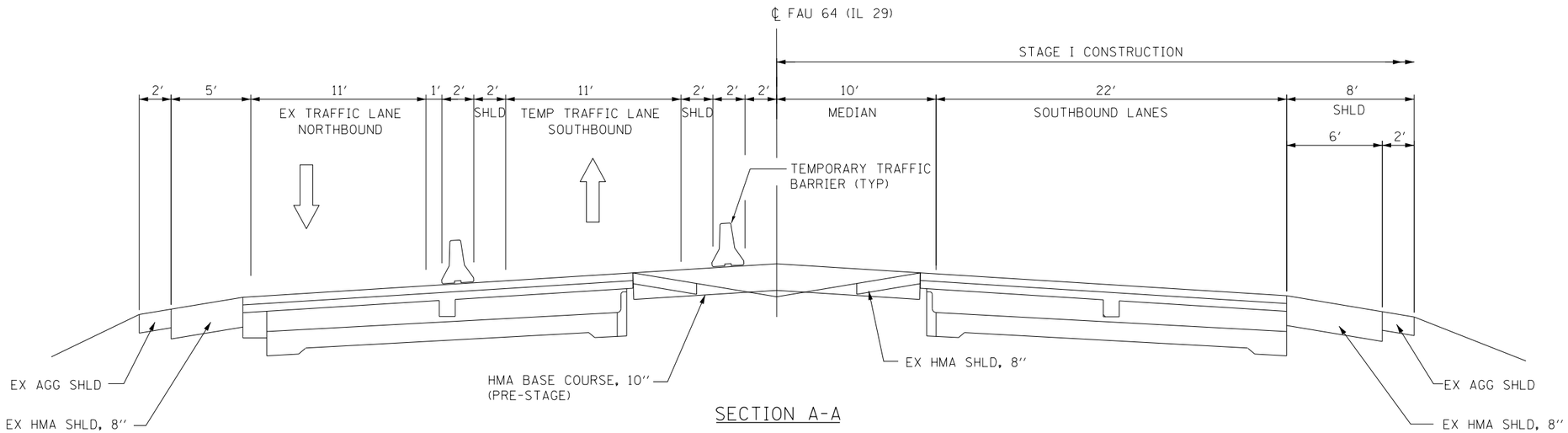

SECTION A-A

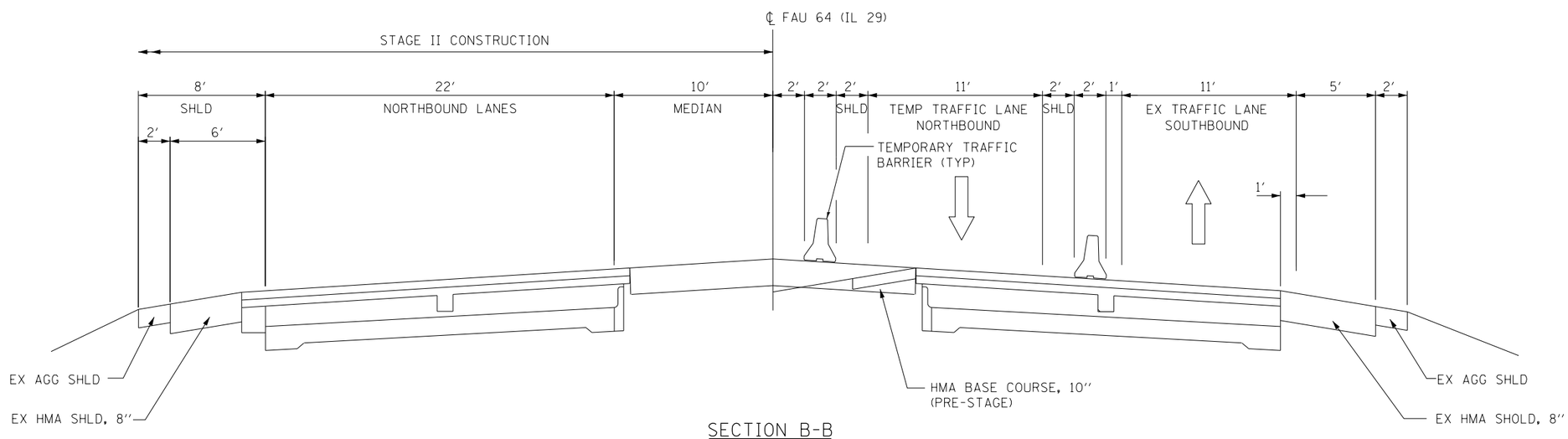

SECTION B-B

2852 South 11th Street Springfield, Illionis 62703	USER NAME = KEITHBR	DESIGNED -	REVISED -	STATE OF ILLINOIS DEPARTMENT OF TRANSPORTATION	TRAFFIC CONTROL TYPICAL SECTIONS		F.A.U. RTE.	SECTION	COUNTY	TOTAL SHEETS / SHEET NO.
		DRAWN -	REVISED -				64	(10B)BR	PEORIA	77 / 28
	PLOT SCALE = 40:0.0005 ':' / in.	CHECKED -	REVISED -						CONTRACT NO. 68481	
	PLOT DATE = 3/18/2014 4:26:47 PM	DATE -	REVISED -		SCALE:	SHEET NO. OF SHEETS	STA. TO STA.	FED. ROAD DIST. NO. 4	ILLINOIS	FED. AID PROJECT