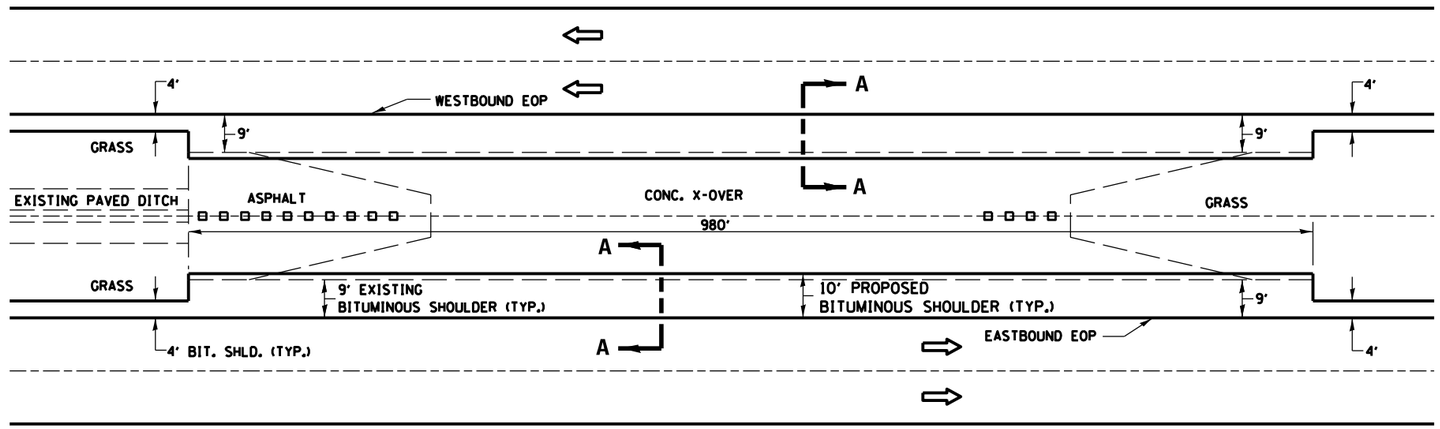

STAGING CROSS-OVER

STA. 616+00

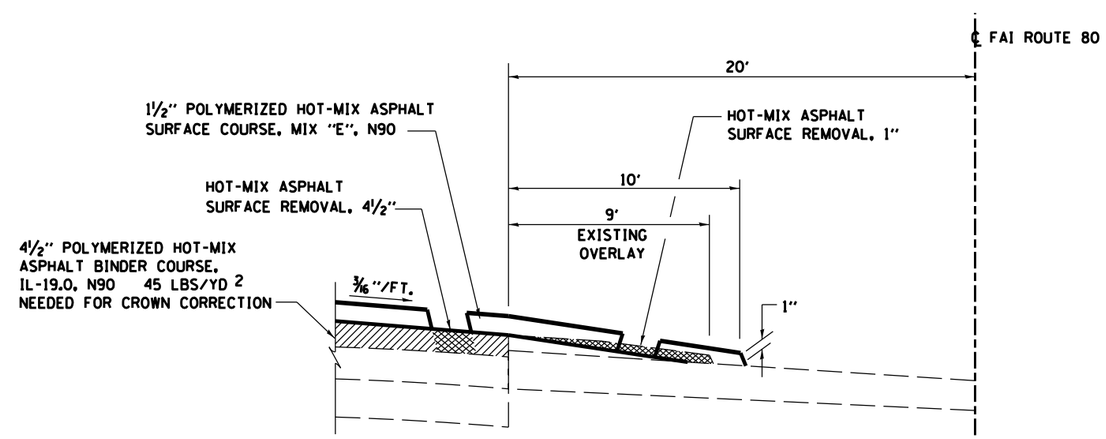

SECTION A-A

FILE NAME = $FILEL$	USER NAME = $USER$	DESIGNED -	REVISED -	STATE OF ILLINOIS DEPARTMENT OF TRANSPORTATION	RESURFACING DETAILS AT STAGING CROSSOVER			F.A.I. RTE.	SECTION	COUNTY	TOTAL SHEETS / SHEET NO.
		DRAWN -	REVISED -					80	(50-4,5)RS-4	LASALLE	54 / 29
	PLOT SCALE = $SCALE$	CHECKED -	REVISED -							CONTRACT NO. 66A35	
	PLOT DATE = $DATE$	DATE -	REVISED -		SCALE:	SHEET NO. OF SHEETS	STA. TO STA.		ILLINOIS FED. AID PROJECT		