CONCRETE COLLARS FOR PIPE OR BOX CULVERT EXTENSIONS

Bill of Materials

	DIMENSIONS		h Bar	U Bar		EXPANSION BOLTS	CONCRETE COLLAR	REINF. BARS
STATION	X	Y	No.	No.	Length	No.	Cu. Yd	LBS
	2	1	2	2	4	4	0.3	6
					Total	4	0.3	6

All h Bars 18 Long

General Notes

Concrete Collars shall be constructed of Class SI Concrete in accordance with Section 503 of the Standard Specifications

Reinforcement bars shall conform to Section 508 of the Standard Specifications.

The concrete will be paid for at the contract unit price per cubic yard for CONCRETE COLLAR. Reinforcement will be paid for at the contract unit price per pound for REINFORCEMENT BARS. Expansion Bolts, when required, will be paid for at the contract unit price each for EXPANSION BOLTS of the size indicated, which price shall include furnishing, drilling holes, and installing the expansion bolts complete in place. These bolts shall extend at least 8 inches into the new concrete.

ALL DIMENSIONS ARE IN INCHES UNLESS OTHERWISE NOTED.

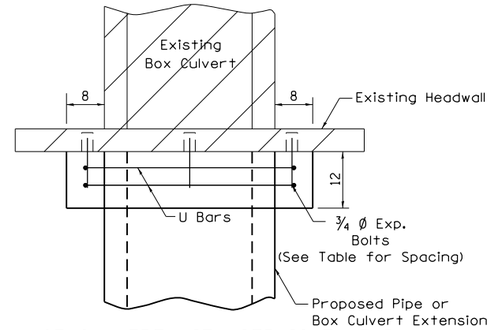

PLAN OF CULVERT WITH STRAIGHT HEADWALL

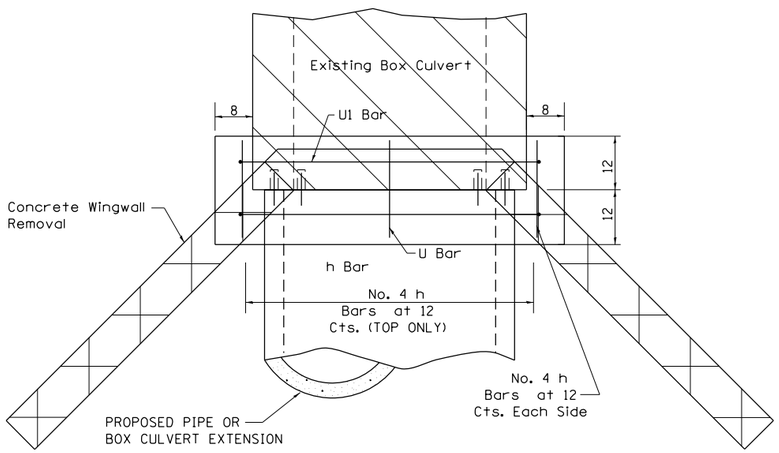

PLAN OF CULVERT WITH ANGLED WING WALLS

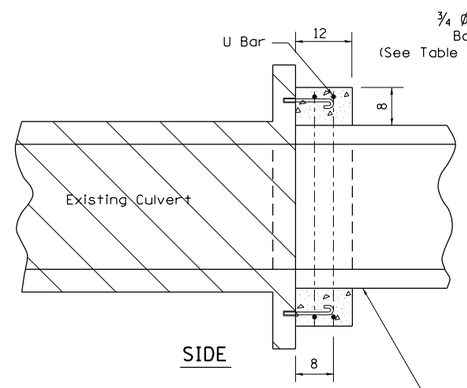

SIDE

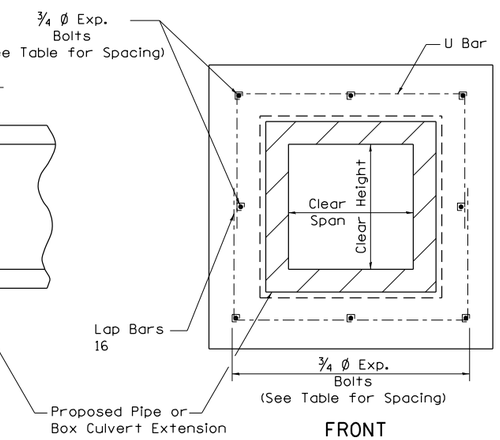

FRONT

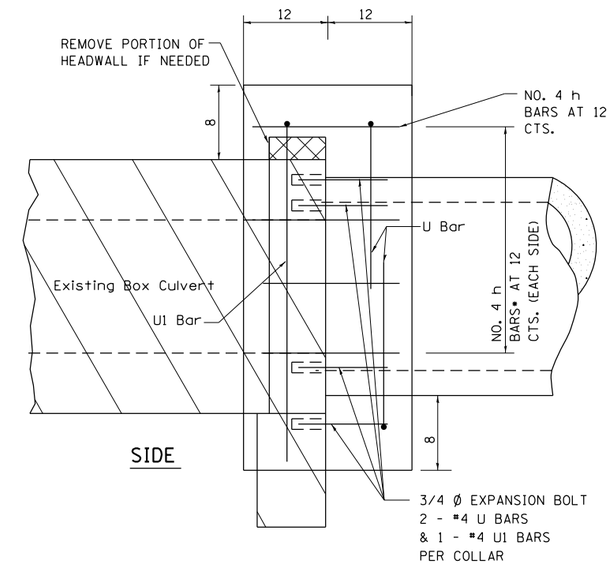

SIDE

PLACEMENT DETAILS FOR EXPANSION BOLTS

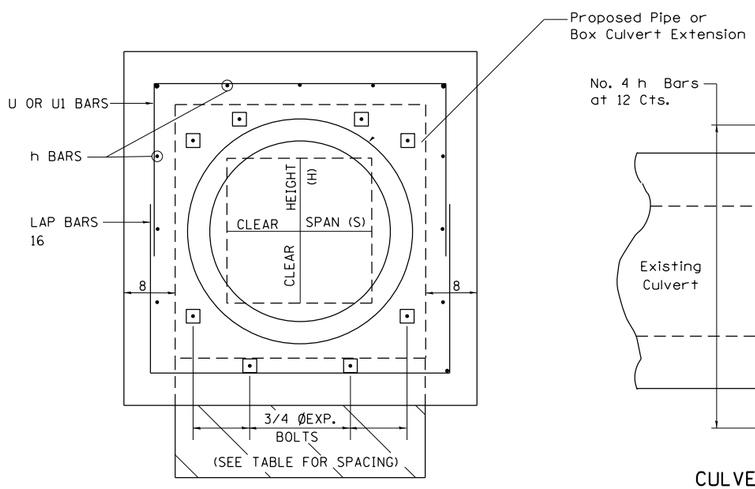

FRONT

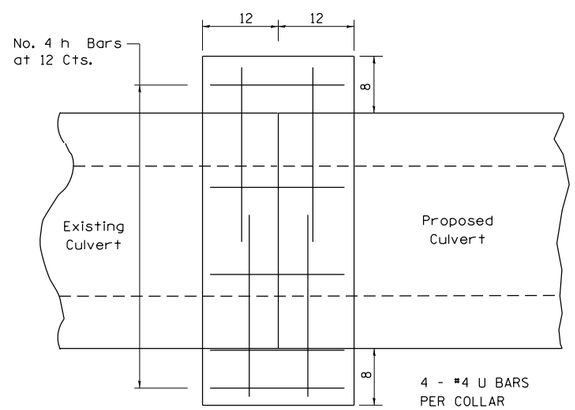

CULVERT CONNECTION WITHOUT EXISTING HEADWALL

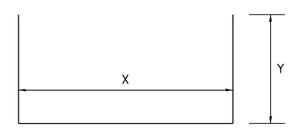

(#4) U BAR

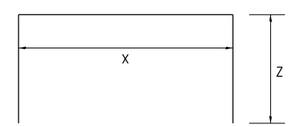

(#4) U1 BAR

H OR S	NUMBER OF EXPANSION BOLTS REQUIRED PER SIDE			
	EXTENSIONS < 15'		EXTENSIONS > 15'	
	NUMBER	SPACING	NUMBER	SPACING
24	*		*	
30	2	18	2	18
36	2	24	2	24
48	3	18	3	18
60	4	16	3	24
72	5	15	4	20
84	5	18	4	24
96	6	15	5	21
108	6	19	5	24
120	7	18	6	21
132	8	17	6	24
144	8	19	7	22

* MINIMUM ONE PER SIDE