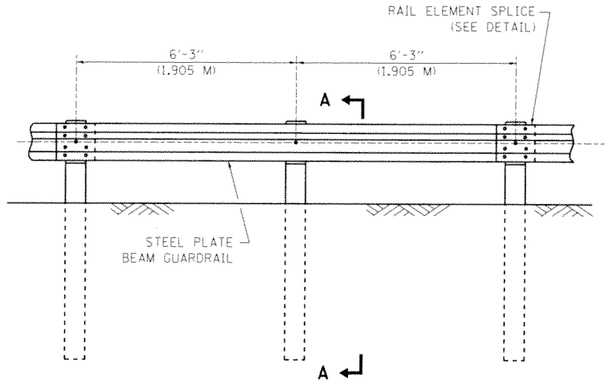

ELEVATION

TYPE A

6'-3" (1.905 M) TYPICAL POST SPACING

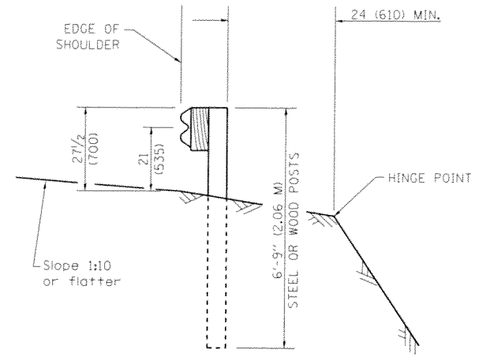

SECTION A-A

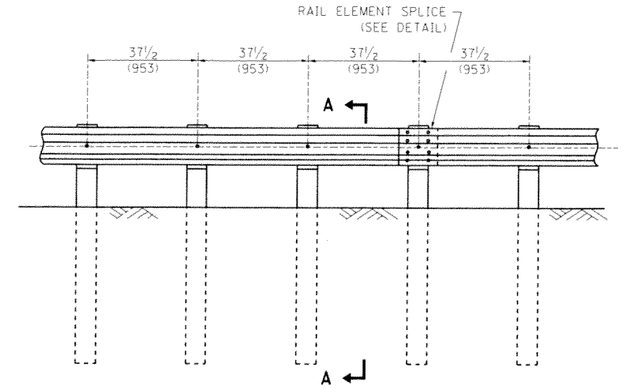

ELEVATION

TYPE A

37½ (953) CLOSED POST SPACING

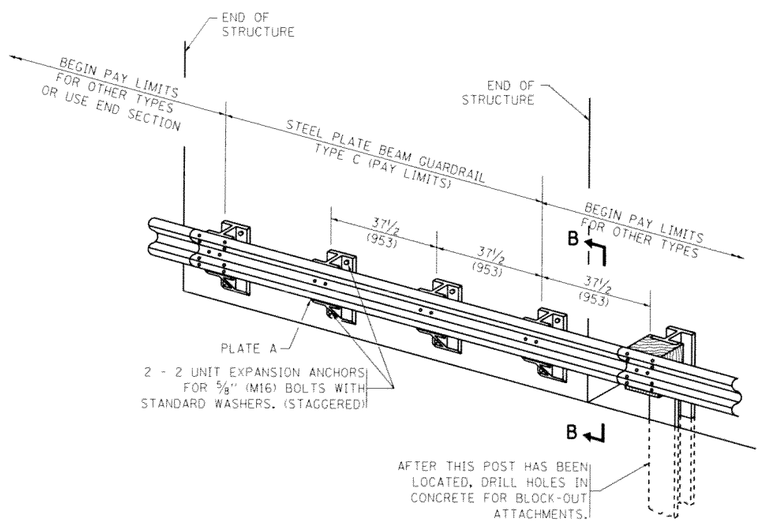

TYPE C

37½ (953) BLOCK-OUT SPACING

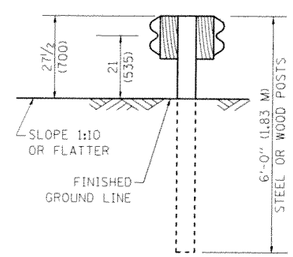

SECTION C-C

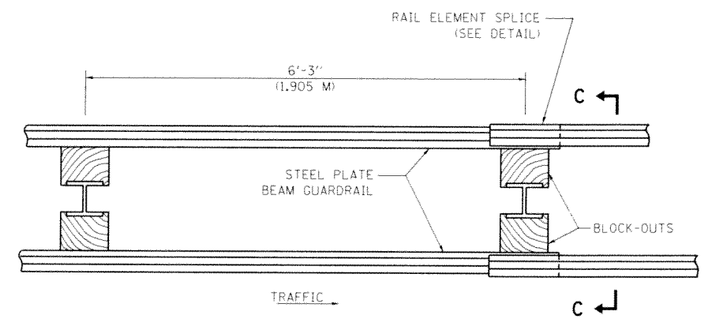

PLAN

TYPE D

DOUBLE STEEL PLATE BEAM GUARDRAIL
6'-3" (1.905 M) TYPICAL POST SPACING

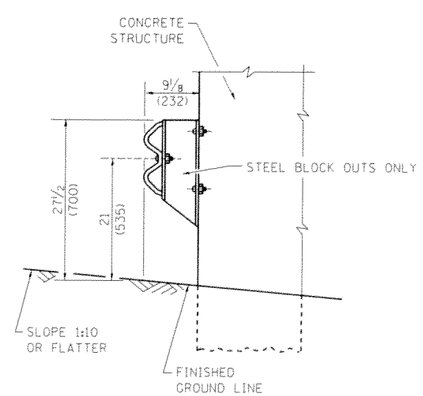

SECTION B-B

GENERAL NOTES

ALL SLOPE RATIOS ARE EXPRESSED AS UNITS OF VERTICAL DISPLACEMENT TO UNITS OF HORIZONTAL DISPLACEMENT (V:H).

ALL DIMENSIONS ARE IN INCHES (MILLIMETERS) UNLESS OTHERWISE SHOWN.

THE EXISTING STEEL POSTS MAY BE DRILLED TO MATCH THE BOLT PATTERN SHOWN HEREIN FOR THE WOOD BLOCK-OUT, OR A NEW STEEL POST SHALL BE PROVIDED.

THIS DETAIL IS APPLICABLE TO THE GUARDRAIL SYSTEM USED PRIOR TO JANUARY 1, 2007. FOR DETAILS ON THE MIDWEST GUARDRAIL SYSTEM, SEE STANDARD 630001.

FILE NAME = c:\pw_work\pwidot\steedpa\d0329923\Dist_Std.dgn	USER NAME = steedpa	DESIGNED -	REVISED - 10-31-06	STATE OF ILLINOIS DEPARTMENT OF TRANSPORTATION	REMOVE AND REERECT STEEL PLATE BEAM GUARDRAIL	F.A.P. RTE.	SECTION	COUNTY	TOTAL SHEETS / SHEET NO.
		DRAWN -	REVISED -			557	2013-0481	KANE	24 / 15
	PLOT SCALE = 100.0000 ' / in.	CHECKED -	REVISED -			BM-21		CONTRACT NO. 60X02	
	PLOT DATE = 3/20/2014	DATE -	REVISED -		SCALE: NONE / SHEET NO. 1 OF 4 SHEETS / STA. / TO STA.	FED. ROAD DIST. NO. 1	ILLINOIS	FED. AID PROJECT	