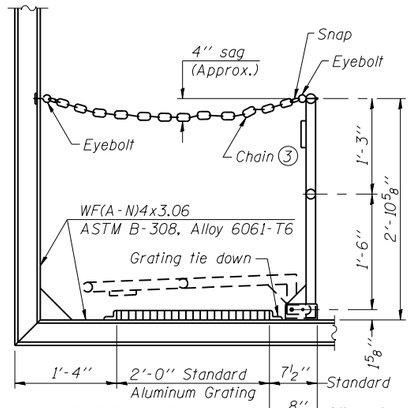

SIDE ELEVATION

(Showing Safety Chain W/O Sign)

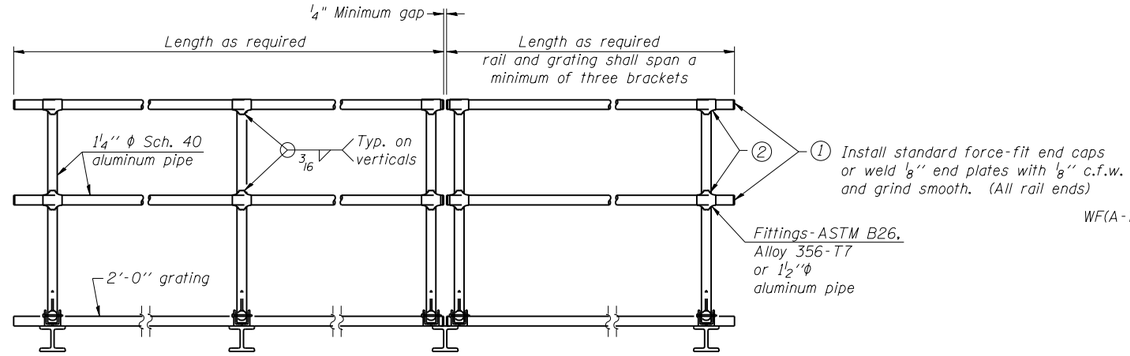

FRONT ELEVATION

② Horizontal handrail member shall be continuous thru fitting. Provide 7/16'' ϕ hole in fitting for 3/8'' ϕ bolt. Field drill 7/16'' ϕ hole in horizontal rail member. Provide locknut and two stainless steel washers for bolt. (Use 5/16'' eyebolts in 7/16'' ϕ holes on top rail at ends only.)

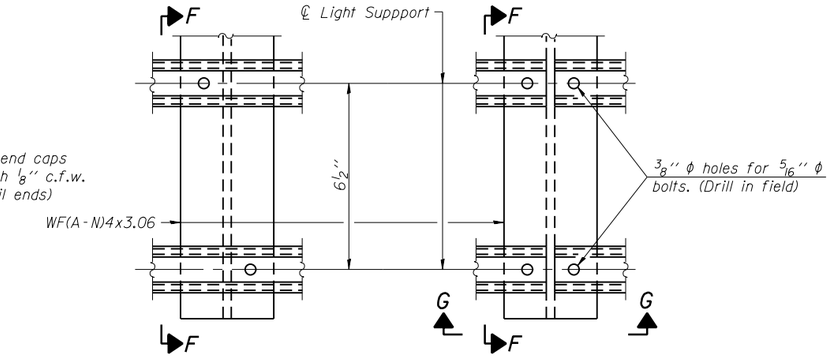

DETAIL F

DETAIL G

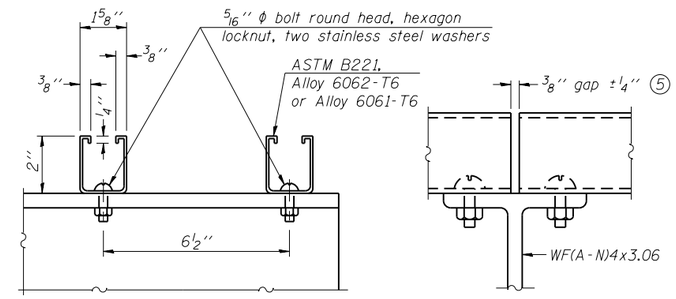

SECTION F-F

SECTION G-G

LIGHTING FIXTURE MOUNTS (IF REQUIRED)

⑤ Field cut ends of light support channels shall be free of burrs or hazardous projections and coated with zinc-rich primer or equivalent.

HANDRAIL DETAILS

Handrail pipe shall be ASTM B241 or B429, Alloy 6063-T6 or Alloy 6061-T6.

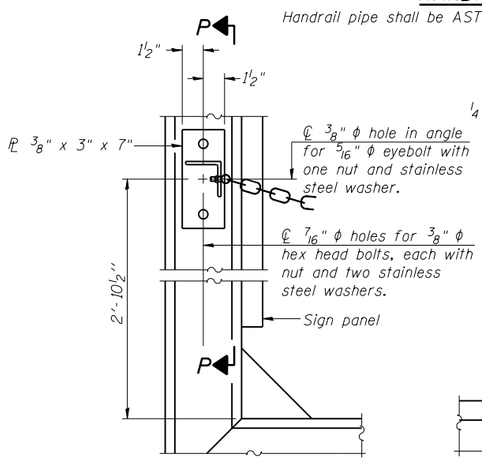

ALTERNATE SAFETY CHAIN ATTACHMENT

(With Sign Present)

Items not shown same as "Side Elevation" of "Handrail Details"

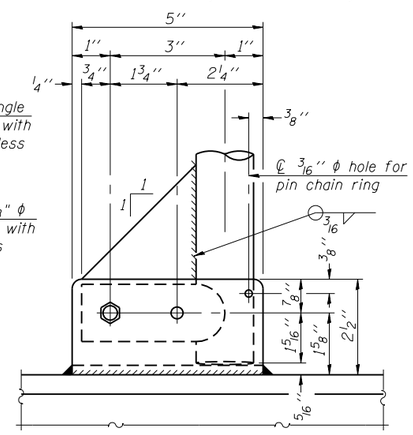

SIDE ELEVATION

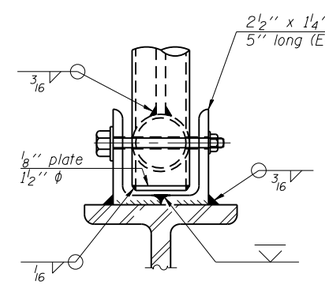

FRONT ELEVATION

Details not shown same as "ELEVATION" at right.

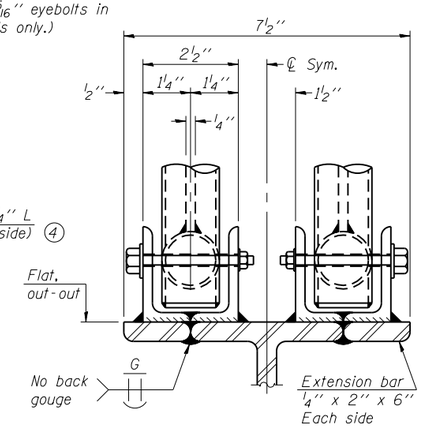

ELEVATION AT HANDRAIL JOINT ④

Details not shown same as "FRONT ELEVATION"

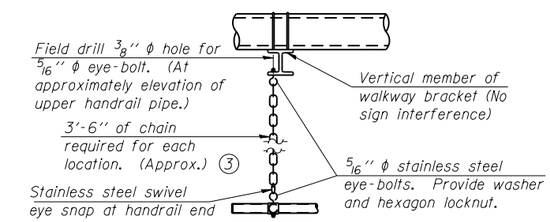

SAFETY CHAIN

One required for each end of each walkway.

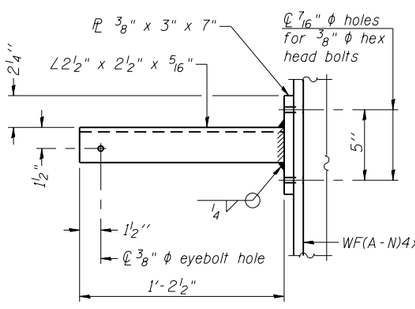

SECTION P-P

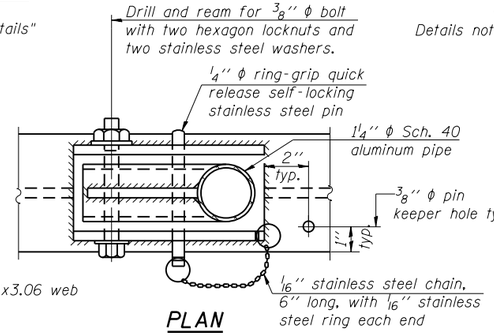

PLAN

DETAIL E HANDRAIL HINGE

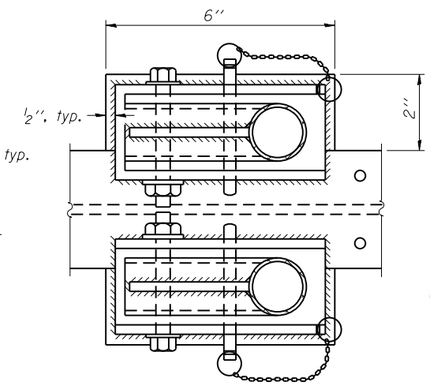

PLAN AT HANDRAIL JOINT

Details not shown same as "PLAN"

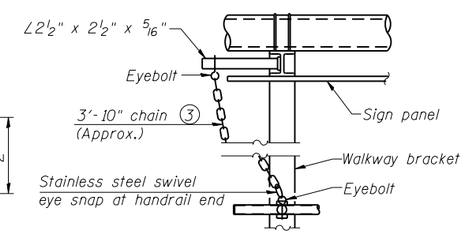

ALTERNATE SAFETY CHAIN ATTACHMENT

Details not shown similar to "Safety Chain" Details
(Walkway omitted for clarity)

③ 3/16'' Type 304L stainless steel chain, approximately 12 links per foot.

④ Extrusions may be used in lieu of the details shown, with approval of the Engineer.

OSC-A-8 6-1-12

Ciorba Group, Inc. CONSULTING ENGINEERS 5507 North Cumberland Avenue Suite 100 Chicago, Illinois 60656 Tel 773.775.4400 Fax 773.775.4014 Email chicago@ciorba.com	USER NAME = jattanaseo	DESIGNED - NG	REVISED -
		CHECKED - BWS	REVISED -
	PLOT SCALE = 0:2.0000 ':' / in.	DRAWN - RD	REVISED -
	PLOT DATE = 1/31/2014	CHECKED - BWS	REVISED -

STATE OF ILLINOIS
DEPARTMENT OF TRANSPORTATION

CANTILEVER SIGN STRUCTURES – HANDRAIL DETAILS
ALUMINUM TRUSS & STEEL POST

SHEET NO. S-8 OF S-26 SHEETS

F.A.I. RTE.	SECTION	COUNTY	TOTAL SHEETS	SHEET NO.
VAR.	•	••	45	27
• D-2 OVD SIN STR REPL 14-27		CONTRACT NO. 46288		
		ILLINOIS FED. AID PROJECT		

•• WINNEBAGO & OGLE

N:\PROJ\00200080.00\00200080.01\Design\Structural\CAD\SN-021-CN_-S008.dgn