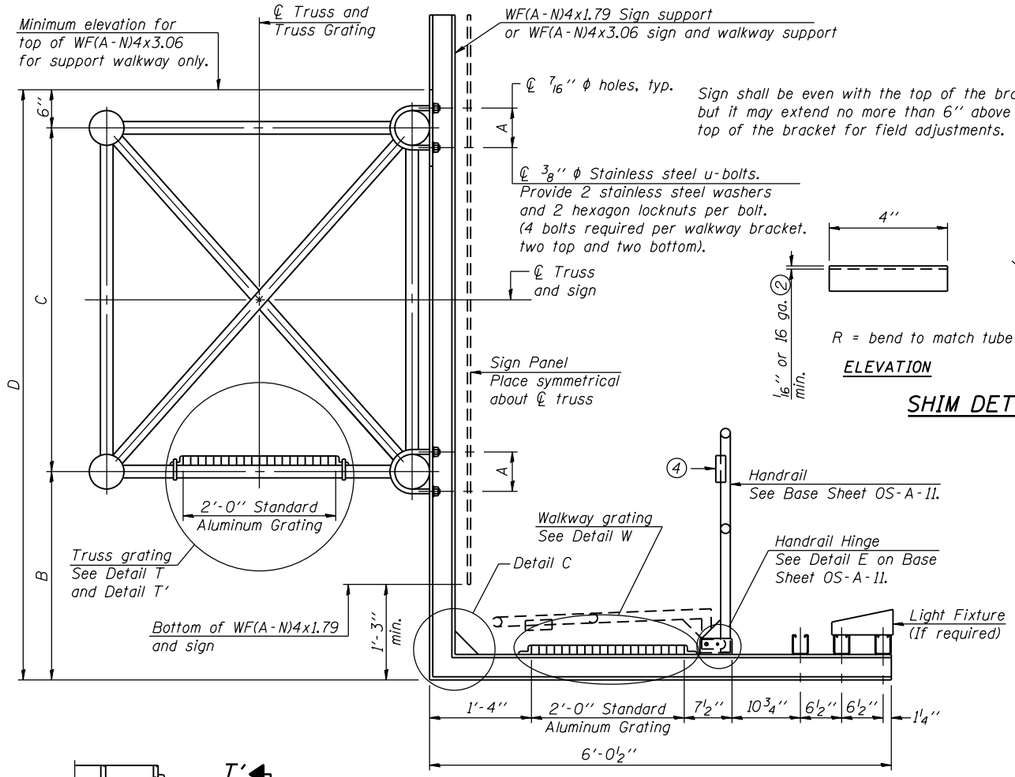

SECTION B-B

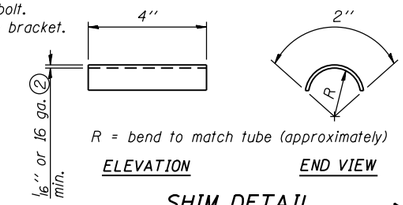

SHIM DETAIL

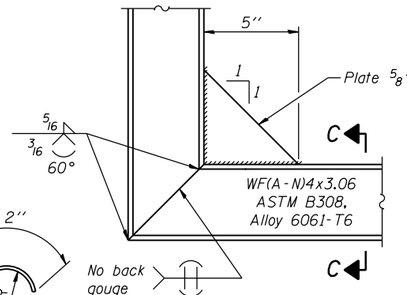

DETAIL C

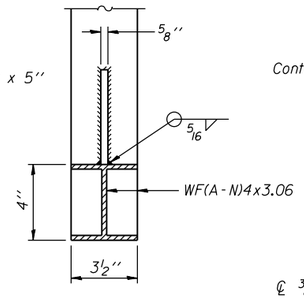

SECTION C-C

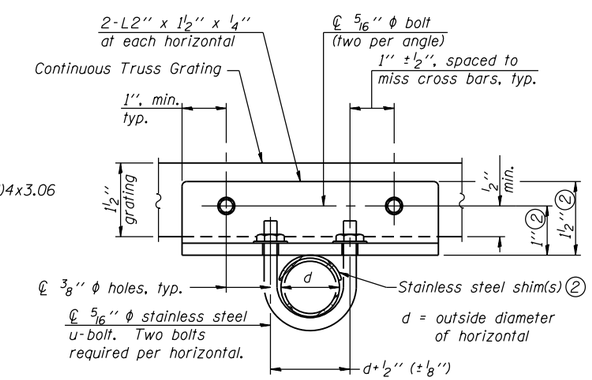

SECTION T-T

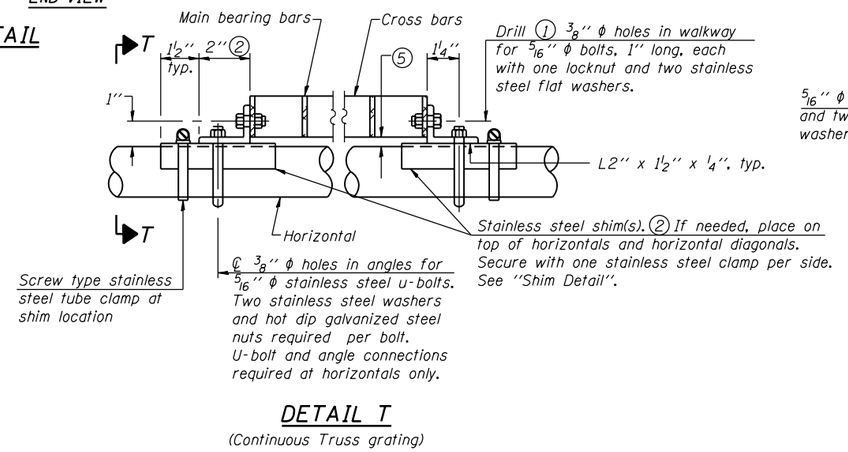

DETAIL T

(Continuous Truss grating)

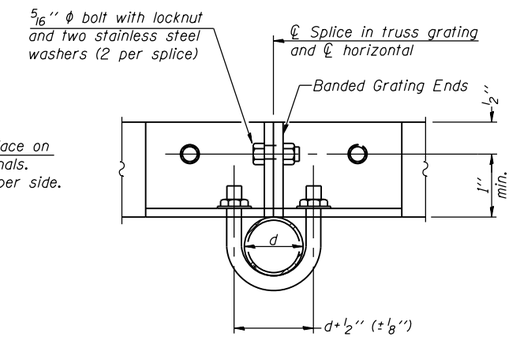

SECTION T'-T'

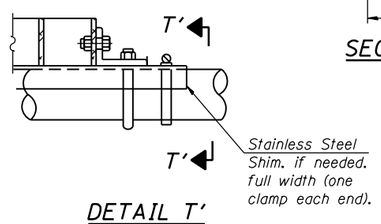

DETAIL T'

(Truss grating splice)
Details not shown same as Detail T.
Alternate materials may be used subject to the Engineer's review and approval.

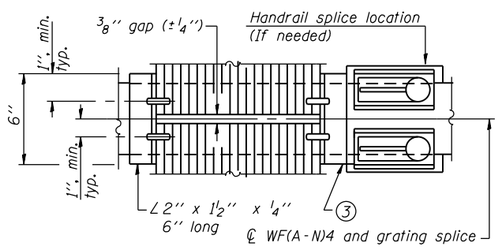

(AT WALKWAY GRATING SPLICE)

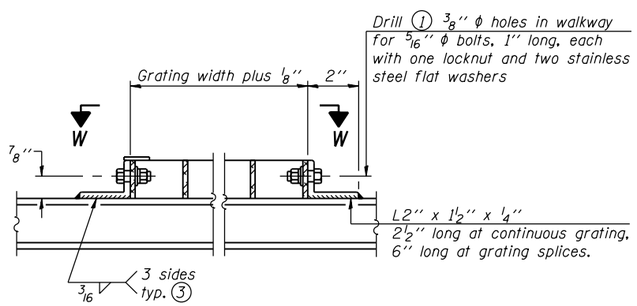

DETAIL W

(Walkway grating)

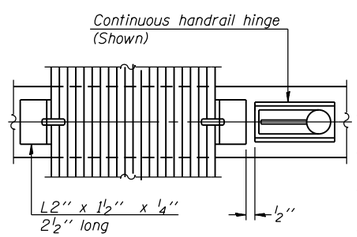

(CONTINUOUS WALKWAY GRATING)

SECTION W-W

SPECIFICATIONS FOR STANDARD ALUMINUM GRATING

Main Bearing Bars shall be 3/16" x 1½" on 1 3/16" centers and conform to ASTM B221 Alloy 6061-T6.

Cross bars shall be 3/16" x 1½" on 4" centers and conform to ASTM B221 Alloy 6063-T5 or 6061-T6.

OR

Aluminum Grating with modified "T" sections for main bearing bars shall meet the following requirements:

Main bars shall conform to ASTM B221 Alloy 6061-T6 and have a minimum section modulus equal to 0.0705 in.³ per bar, a depth of 1½", spaced on 1 3/16" centers.

Cross bars shall conform to ASTM B221 Alloy 6063-T5 or T-42 and spaced on 4" centers.

D2 INV. NO.	Structure Number	Station	A	⑥ B	C	⑥ D
SN-101	2S081I088R015.3		7 "	4'-10½"	5'-3"	10'-7½"
SN-104	2S081I088L016.0		6 "	5'-3"	4'-6"	10'-3"
SN-126	2S081S005R011.2		5½"	3'-9"	4'-6"	8'-9"
SN-147	2S081S092L028.0		5½"	5'-0"	4'-6"	10'-0"

① Drilling holes in grating may be done in shop or field, based on Contractor's preference and subject to accurate alignment.

② Stainless steel shims shall be placed as shown in Detail T if needed to compensate for alignment variations between horizontal and diagonal pipes beyond adjustment provided by angles. Thicker shims may be used subject to shims performing properly.

③ If Handrail Joint present, weld angle to WF(A-N)4 and ¼" extension bars. (See Base Sheet OS-A-11.)

④ PL ⅛" x ½" x 2" welded to handrail posts to protect locations that contact grating.

⑤ Tube to grating gap may vary from 0 to ½", max. to align walkway, allow for camber, etc.

⑥ Based on actual height of tallest sign given on OS-A-1.

OS-A-10 6-1-12

HBM ENGINEERING GROUP, LLC. CONSULTING & DESIGN INSPECTION & RATING RESEARCH & TESTING
4415 WEST HARRISON ST. SUITE 231 HILLSIDE, IL 60162 PHONE: (708) 236-0900 FAX: (708) 236-0901

USER NAME =	DESIGNED - JMG	REVISED -
	CHECKED - JJS	REVISED -
PLOT SCALE =	DRAWN - AI	REVISED -
PLOT DATE = 3/12/2014	CHECKED - MAI	REVISED -

STATE OF ILLINOIS
DEPARTMENT OF TRANSPORTATION

OVERHEAD SIGN STRUCTURES
ALUMINUM WALKWAY DETAILS

Sheet No. 8 of 11

F.A. RTE.	SECTION	COUNTY	TOTAL SHEETS	SHEET NO.
VAR.	•	ROCK ISLAND	45	37
• D-2 OVD SIN STR REPL 14-26		CONTRACT NO. 46287		
		ILLINOIS FED. AID PROJECT		