CONTRACT #97382

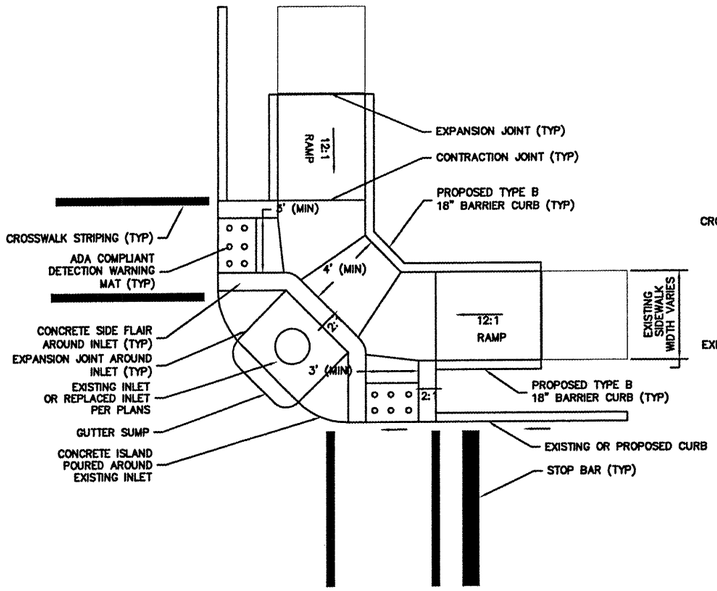

RESIDENTIAL ADA RAMPS AT CORNERS
PLAN VIEW
(N.T.S.)

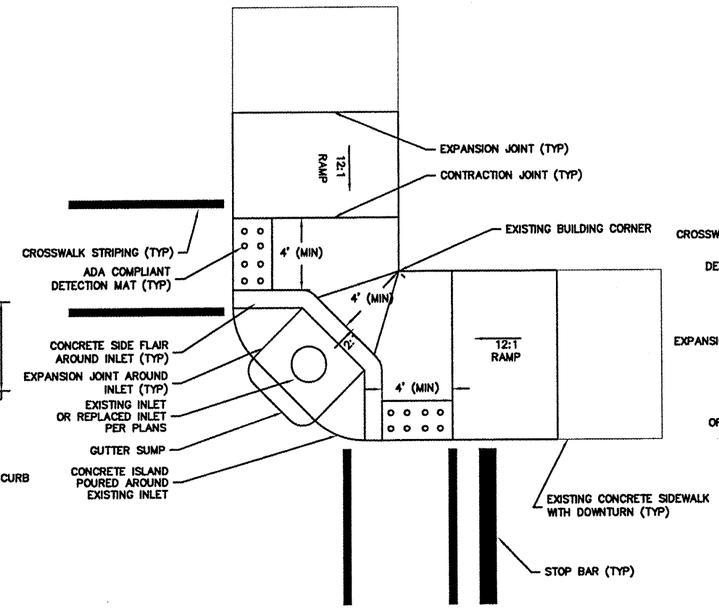

COMMERCIAL ADA RAMPS WITH DEPRESSED SIDEWALK AT CORNER
PLAN VIEW
(N.T.S.)

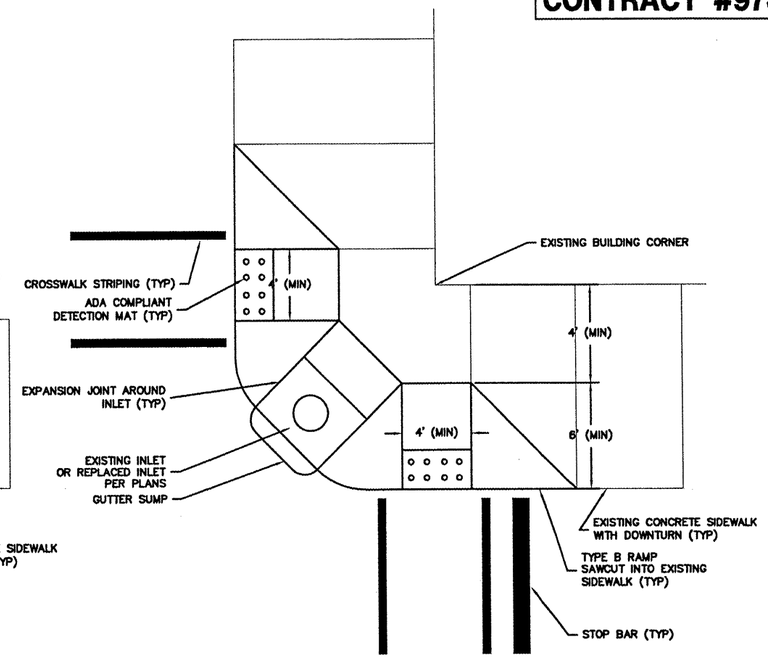

COMMERCIAL ADA RAMPS WITH TYPE B RAMPS AT CORNER
PLAN VIEW
(N.T.S.)

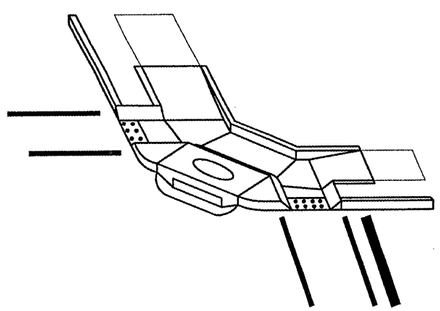

RESIDENTIAL ADA RAMPS AT CORNERS
ISOMETRIC VIEW
(N.T.S.)

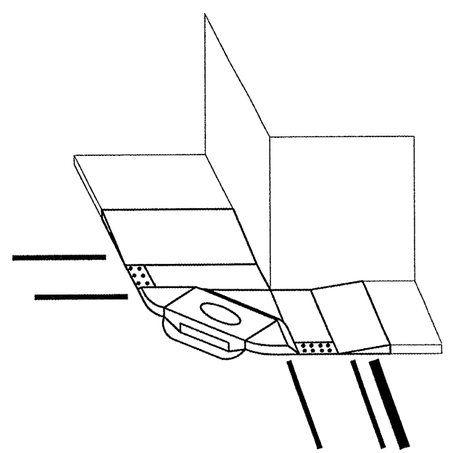

COMMERCIAL ADA RAMPS WITH DEPRESSED SIDEWALK AT CORNER
ISOMETRIC VIEW
(N.T.S.)

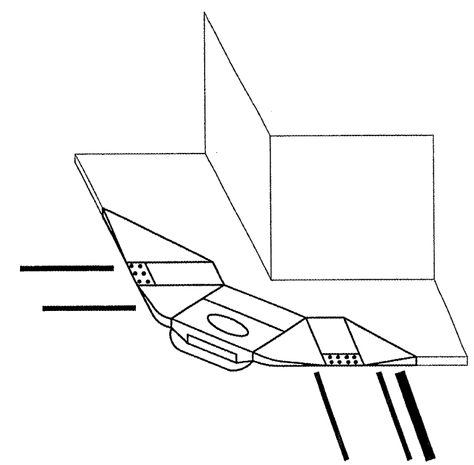

COMMERCIAL ADA RAMPS WITH TYPE B RAMPS AT CORNER
ISOMETRIC VIEW
(N.T.S.)

NOTES:

1. SPECIAL ADA RAMPS ARE SHOWN IN THE PLAN DETAILS DUE TO THE LOCATION OF THE EXISTING STORM WATER INLETS TYPICALLY LOCATED ON THE CORNERS OF THE STREET.
2. ALL ADA RAMPS SHALL BE CONSTRUCTED TO DRAIN TO THE GUTTERLINE AND RUN TO THE INLET (EITHER EXISTING OR PROPOSED).

FILE NAME $FILEL$	USER NAME = $USER$	DESIGNED — KJW	REVISED —
		DRAWN — JMA	REVISED —
	PLOT SCALE = 1:1	CHECKED —	REVISED —
	PLOT DATE = 4-9-09	DATE — 4-9-09	REVISED —

CITY OF EAST SAINT LOUIS
9TH STREET RESURFACING

MISCELLANEOUS DETAILS

SCALE: N.T.S. | SHEET NO. 10 OF 11 SHEETS | STA. ____ TO STA. ____

F.A.U. RTE.	SECTION	COUNTY	TOTAL SHEETS	SHEET NO.
9214	08-00218-00 RS	ST. CLAIR	11	10
		CONTRACT NO. _____		

FED. ROAD DIST. NO. _ | ILLINOIS | FED. AID PROJECT

PLAN — SURVEYED / PLOTTED / ALIGNMENT CHECKED / DATA VERIFIED / CADD FILE NAME / NOTE BOOK NO. / BY / DATE

PROFILE — SURVEYED / PLOTTED / GRADES CHECKED / DATA VERIFIED / STRUCTURE NOTATIONS CHKD / NOTE BOOK NO. / BY / DATE