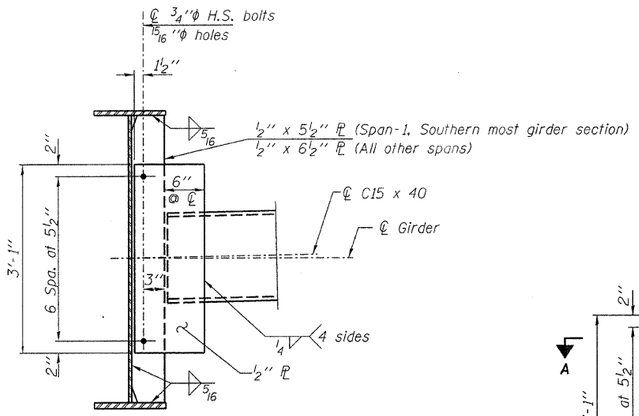

INTERIOR DIAPHRAGMS (D)

(60-required)

Note:
Two hardened washers required for each set of oversized holes.

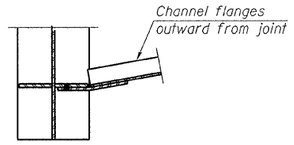

SECTION A-A

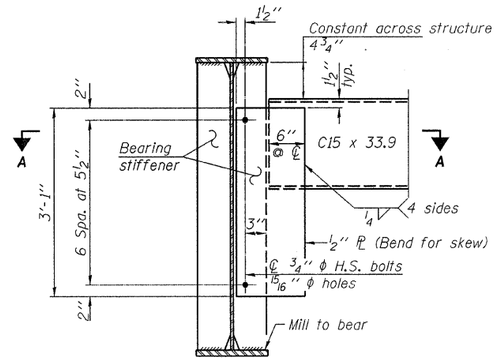

END DIAPHRAGMS AT ABUTMENTS (D_1)

(6-required)

Note: Two hardened washers required for each set of oversized holes.

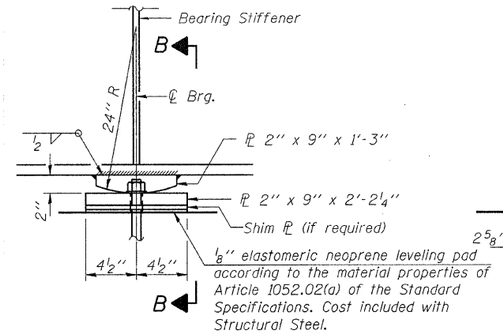

ELEVATION AT PIER

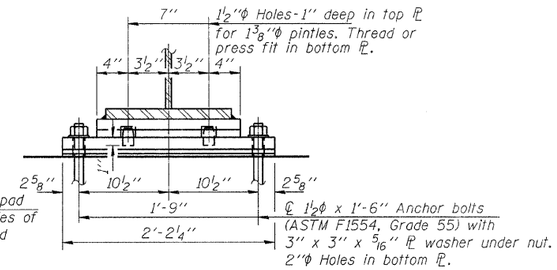

SECTION B-B

FIXED BEARING AT PIERS 1, 2 & 3

(12 - required)

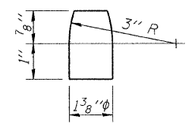

PINTLE

Notes:

Anchor bolts shall be ASTM F1554 all-thread (or an Engineer-approved alternate material) of the grade(s) and diameter(s) specified. ASTM A307 Grade C anchor bolts may be used in lieu of ASTM F1554 Grade 55 (Fy=55ksi). The corresponding specified grade of AASHTO M314 anchor bolts may be used in lieu of ASTM F1554.

Anchor bolts at fixed bearings may be either cast in place or installed in holes drilled after the supported member is in place.

Drilled and set anchor bolts shall be installed according to Article 521.06 of the Standard Specifications.

Two 1/8 in. adjusting shims shall be provided for each bearing in addition to all other plates or shims and placed as shown on bearing details.

The structural steel plates of the fixed bearings, including pintles, shall conform to the requirements of AASHTO M270 Grade 50W.

For additional structural steel details see sheets 23 thru 25.

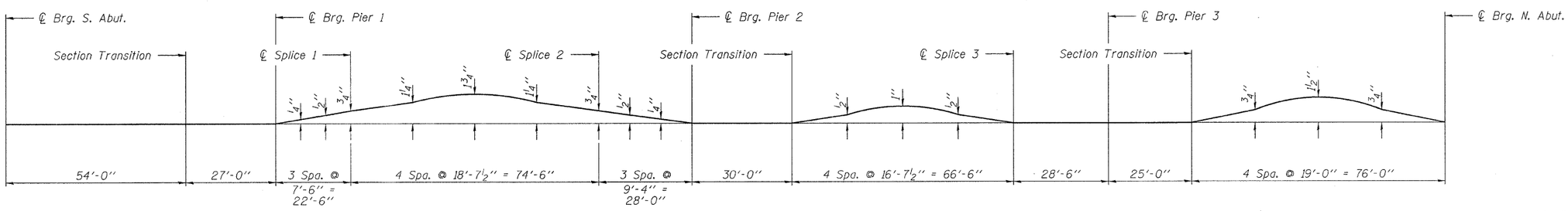

CAMBER DIAGRAM

BILL OF MATERIAL

Item	Unit	Total
Anchor Bolts, 1 1/2"	Each	24

DESIGNED -	M.D.C.
CHECKED -	S.M.S.
DRAWN -	D.A.B.
CHECKED -	M.G.B.

STRUCTURAL STEEL DETAILS
STRUCTURE NO. 074-3296

HAMPTON, LENZINI & RENWICK, INC.
CIVIL & STRUCTURAL ENGINEERS
LAND SURVEYORS
HLR
3085 STEVENSON DRIVE, SUITE 201
SPRINGFIELD, ILLINOIS 62703
(217) 546-3400

PROJECT NUMBER: 12-75-0001-1 | DATE: 12/22/08

T.R.	SECTION	COUNTY	TOTAL SHEETS	SHEET NO.
154	03-06130-00-BR	PIATT	57	26
SANGAMON ROAD DISTRICT		CONTRACT NO. 91385		
FED. ROAD DIST. NO.	ILLINOIS	FED. AID PROJECT		