6-12-09 Letting, Item 173

CONTRACT NO. 72A76

F.A.P. RTE.	SECTION	COUNTY	TOTAL SHEETS	SHEET NO.
614	*	CASS,MASON	351	1

* 144(B-1, B-2)

STATE OF ILLINOIS
DEPARTMENT OF TRANSPORTATION
DIVISION OF HIGHWAYS

PROPOSED HIGHWAY PLANS

FAP ROUTE 614 (IL 78)
SECTION 144(B-1, B-2)
PROJECT: ACF-BRF-0614(031)
CASS AND MASON COUNTIES
C-96-514-08

INDEX OF SHEETS

SHT NO.	DESCRIPTION
1	COVER SHEET
2	GENERAL NOTES AND COMMITMENTS
3-7	SUMMARY OF QUANTITIES
8-12	SCHEDULE OF QUANTITIES
13-23	TYPICAL CROSS SECTIONS
24-28	SURVEY LAYOUT INFORMATION
29-50	TRAFFIC CONTROL & PROTECTION AND STAGING DETAILS
51	PPP LINE DIAGRAM
52-67	PLAN & PROFILE SHEETS
68-69	RELOCATION PAVEMENT CONNECTER DETAILS
70-72	BOAT RAMP & PARKING AREA LAYOUT & ELEVATION DETAILS
73-75	BOAT RAMP AND PARKING AREA TYPICAL SECTIONS AND DETAILS
76-77	BOAT RAMP PROFILES
78-79	ACCESS GATE DETAILS
80-83	ENTRANCE DETAILS
84	BRIDGE APPROACH PIPE DRAIN OUTLET AND RIPRAP SWALE DETAILS
85	BUTT JOINT AND FILLSLOPE STEPPING DETAILS
86	FIELD TILE REPLACEMENT DETAILS
87	PERMANENT EROSION PROTECTION DETAILS
88-99	STORM WATER POLLUTION AND PREVENTION PLAN
100-103	BRIDGE APPROACH PAVEMENT DETAILS
104	BIG LAKE FILL DETAILS
105	TEMPORARY BRIDGE TRAFFIC SIGNAL DETAILS
106-107	BRIDGE REPAIR DETAIL SN 009-0006
108-136	BRIDGE DETAILS (SN 063-0500) -- WOLF LAKE
137-222	BRIDGE DETAILS (SN 009-0510) -- SANGAMON RIVER
223-226	BOX CULVERT DETAILS (SN 009-2509)
227-328	CROSS SECTIONS - FAP 614 (IL 78)
329-342	CROSS SECTIONS - SANGAMON RIVER, NORTH BANK
343-351	CROSS SECTIONS - SANGAMON RIVER, SOUTH BANK

LIST OF STANDARDS

000001-05	606006-02	701301-03
001001-02	609001-04	701306-02
001006	609006-04	701311-03
280001-04	630001-08	701321-10
~~420401-07~~	630301-05	701326-03
420701-02	631031-07	701331-03
442201-04	635006-03	701901-01
515001-03	635011-02	704001-05
542301-02	666001-01	720001-01
542401-01	701001-02	720006-02
601101-01	701006-03	728001-01
602301-02	701011-02	780001-02
604036-02	701201-03	781001-03

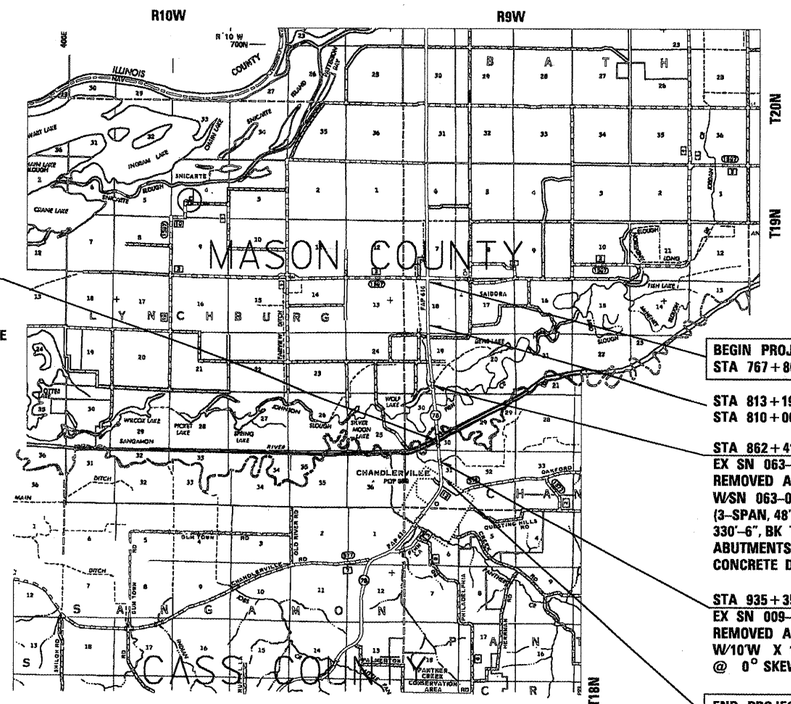

LOCATION MAP

0 1 2 3 4 5 MILES

SCALE

STA 913+26.00
EX SN 009-0005 TO BE REMOVED AND REPLACED W/SN 009-0510 (12 SPAN, 54" & 66" WEB PLATE GIRDER, 1820'-0", BK TO BK ABUTMENTS, 39'-2" O TO O CONCRETE DECK, SKEWED 25° RT FWD)

BEGIN PROJECT
STA 767+80.00

STA 813+19.00 BK =
STA 810+00.00 AH

STA 862+41.25
EX SN 063-0007 TO BE REMOVED AND REPLACED W/SN 063-0500 (3-SPAN, 48" WEB PLATE GIRDERS, 330'-6", BK TO BK ABUTMENTS, 39'-2" O TO O CONCRETE DECK @0° SKEW)

STA 935+35.00
EX SN 009-0006 TO BE REMOVED AND REPLACED W/10'W X 10'H R.C. BOX CULVERT @ 0° SKEW (SN 009-2509)

END PROJECT
STA 953+00.00

TRAFFIC DATA

ADT (2007) =	1,450
PV (88%) =	1,276
SU (6%) =	87
MU (6%) =	87
ADT (2029) =	1,950

NET PROJECT LENGTH = 18,839.00 FEET = 3.568 MILES
TOTAL PROJECT LENGTH = 18,839.00 FEET = 3.568 MILES

D-96-506-07

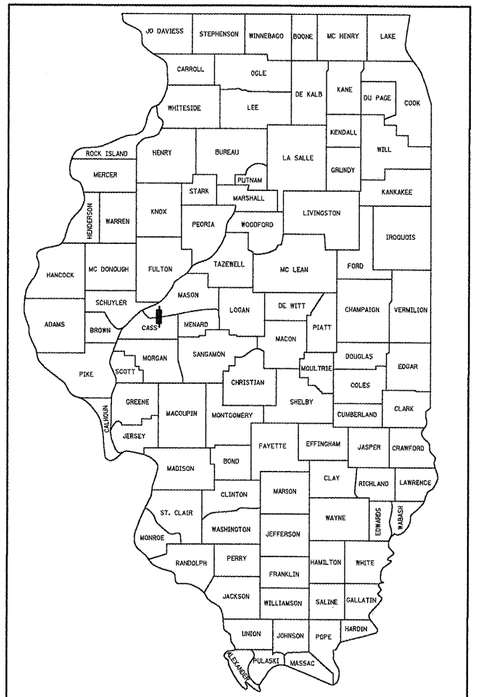

LOCATION OF SECTION INDICATED THUS:-

Coombe-Bloxdorf P.C.
-CIVIL ENGINEERS-
-STRUCTURAL ENGINEERS-
-LAND SURVEYORS-
Design Firm License No. 184-002703

STATE OF ILLINOIS
DEPARTMENT OF TRANSPORTATION
DIVISION OF HIGHWAYS

SUBMITTED March 27 2009
Roger L. Driskel
DEPUTY DIRECTOR OF HIGHWAYS, REGION ENGINEER
May 8, 2009
Charles J. Ingersoll
ENGINEER OF DESIGN AND ENVIRONMENT
May 8, 2009
Christine M. Reed
DIRECTOR OF HIGHWAYS, CHIEF ENGINEER

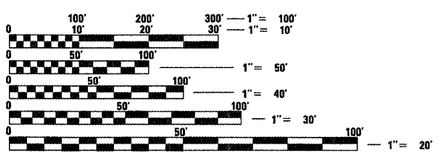

FULL SIZE PLANS HAVE BEEN PREPARED USING STANDARD ENGINEERING SCALES. REDUCED SIZED PLANS WILL NOT CONFORM TO STANDARD SCALES. IN MAKING MEASUREMENTS ON REDUCED PLANS, THE ABOVE SCALES MAY BE USED.

J.U.L.I.E.
JOINT UTILITY LOCATION INFORMATION FOR EXCAVATION
1-800-892-0123

COOMBE BLOXDORF MARY 43208 REGISTERED PROFESSIONAL ENGINEER OF ILLINOIS
Mary Coombe Bloxdorf 3/27/09
Exp. 11/30/09

PRINTED BY THE AUTHORITY OF THE STATE OF ILLINOIS

CONTRACT NO. 72A76

PROJECT ENGINEER: JOHN NEGANGARD; (217) 782-6990
SQUAD LEADER: VINCE MADONIA; (217) 785-9046

GENERAL NOTES

1. ALL ELEVATIONS REFER TO U.S.G.S. MEAN SEA LEVEL DATUM.

2. WHERE SECTION OR SUBSECTION MONUMENTS ARE ENCOUNTERED, THE ENGINEER SHALL BE NOTIFIED BEFORE SUCH MONUMENTS ARE REMOVED. THE CONTRACTOR SHALL PROTECT AND CAREFULLY PRESERVE ALL MONUMENTS UNTIL AN AUTHORIZED SURVEYOR OR AGENT HAS WITNESSED OR OTHERWISE REFERENCED THEIR LOCATION. THE CONTRACTOR WILL BE RESPONSIBLE FOR HAVING AN AUTHORIZED SURVEYOR RE-ESTABLISH ANY SECTION OR SUBSECTION MONUMENTS DESTROYED BY HIS OPERATIONS. THIS WORK WILL BE PAID FOR IN ACCORDANCE WITH ARTICLE 109.04.

3. ANY REFERENCE TO A STANDARD IN THESE PLANS SHALL BE INTERPRETED TO MEAN THE EDITION AS INDICATED BY THE SUB-NUMBER LISTED OR THE COPY OF THE STANDARD INCLUDED IN THESE PLANS.

4. ABANDONED UNDERGROUND UTILITIES THAT CONFLICT WITH CONSTRUCTION SHALL BE DISPOSED OUTSIDE THE LIMITS OF RIGHT OF WAY ACCORDING TO ARTICLE 202.03 OF THE STANDARD SPECIFICATIONS AND AS DIRECTED BY THE ENGINEER. THIS WORK WILL NOT BE PAID FOR SEPARATELY BUT SHALL BE INCLUDED IN THE COST OF EARTH EXCAVATION AND NO ADDITIONAL COMPENSATION WILL BE ALLOWED.

5. ALL DISTURBED UNSURFACED AREAS WITHIN THE ROW AND EASEMENTS SHALL BE SEEDED, FERTILIZED, AND MULCHED AS SHOWN IN THE PLANS, SPECIAL PROVISIONS, AND AS DIRECTED BY THE ENGINEER. SEEDING WILL NOT BE PERMITTED AT ANY TIME WHEN THE GROUND IS FROZEN, WET OR IN AN UNTILLABLE CONDITION.

6. FERTILIZER NUTRIENTS SHALL BE APPLIED TO BOTH THE SEEDED AREAS AND THE AREAS COVERED WITH EROSION CONTROL BLANKET.

7. DO NOT INCLUDE MULCH OR EMULSIFIED ASPHALT ON EROSION CONTROL BLANKET AREAS.

8. BEFORE ORDERING PIPE CULVERTS OR PIPE DRAINS, THE CONTRACTOR SHALL CONSULT THE ENGINEER FOR EXACT LENGTHS.

9. PROTECTIVE COAT SHALL BE APPLIED TO THE SURFACE OF NEW CONCRETE ACCORDING TO SECTION 503 OF THE STANDARD SPECIFICATIONS.

10. ALL TREES, BRUSH AND SHRUBS WITHIN THE CONSTRUCTION LIMITS WILL BE REMOVED IN ACCORDANCE WITH THE STANDARD SPECIFICATIONS. TREES ALONG THE EDGE OF RIGHT OF WAY, OUTSIDE THE CONSTRUCTION LIMITS SHALL BE SAVED IF, IN THE OPINION OF THE ENGINEER, THEY DO NOT INTERFERE WITH CONSTRUCTION OPERATIONS. THE CONTRACTOR WILL PROTECT ALL REMAINING TREES FROM DAMAGE DUE TO HIS OPERATIONS.

11. TREE REMOVAL, ACRES AS SHOWN IN THE TREE REMOVAL SCHEDULE HAVE BEEN MEASURED FROM RIGHT OF WAY TO RIGHT OF WAY BETWEEN THE STATION LIMITS NOTED IN THE SCHEDULE. THE ACTUAL QUANTITY REMOVED SHALL BE ADJUSTED AS NECESSARY SO THAT TREES BEYOND THE CONSTRUCTION LIMITS WHICH ARE OUTSIDE OF THE CLEAR ZONE CAN BE LEFT IN PLACE AS DIRECTED BY THE ENGINEER.

12. IN ACCORDANCE WITH STATE OF ILLINOIS P.A. 86-0674, THE CONTRACTOR IS TO NOTIFY ALL UTILITY COMPANIES NOT MORE THAN 14 DAYS NOR LESS THAN 48 HOURS (EXCLUSIVE OF SATURDAYS, SUNDAYS, AND HOLIDAYS) IN ADVANCE OF THE START OF EXCAVATION OR DEMOLITION.

    J.U.L.I.E. TELEPHONE NUMBER
    1-800-892-0123

    KNOWN UTILITIES LOCATED WITHIN THE LIMITS OF THIS IMPROVEMENT ARE:

    CASS TELEPHONE COMPANY
    CASS CABLE
    AMEREN CIPS (GAS & ELECTRIC)
    FRONTIER COMMUNICATIONS
    MENARD ELECTRIC CO-OPERATIVE

13. ALL EXISTING FENCE WITHIN THE PROPOSED RIGHT-OF-WAY SHALL BE REMOVED. THE COST OF THE FENCE REMOVAL WILL BE INCLUDED IN THE COST OF EARTH EXCAVATION.

14. THE LOCATION OF BURIED AND ABOVE GROUND UTILITIES SHOWN ARE APPROXIMATE, AND ARE SHOWN FOR CONTRACTOR INFORMATIONAL USE ONLY, AND ARE NOT TO BE REFERENCED FOR CONSTRUCTION PURPOSES. THE IMPLIED PRESENCE OR ABSENCE OF UTILITIES IS NOT TO BE CONSTRUED BY THE OWNER, ENGINEER, CONTRACTOR, OR SUBCONTRACTORS TO BE AN ACCURATE AND COMPLETE REPRESENTATION OF UTILITIES THAT MAY OR MAY NOT EXIST ON THE CONSTRUCTION SITE. BURIED AND ABOVE GROUND UTILITY LOCATIONS, IDENTIFICATION, AND MARKING ARE THE SOLE RESPONSIBILITY OF THE CONTRACTOR. REROUTING, DISCONNECTION, PROTECTION, ETC. OF ANY UTILITIES MUST BE COORDINATED BETWEEN THE CONTRACTOR, UTILITY COMPANY, AND OWNER. SITE SAFETY, INCLUDING THE AVOIDANCE OF HAZARDS ASSOCIATED WITH BURIED AND ABOVE GROUND UTILITIES, REMAINS THE SOLE RESPONSIBILITY OF THE CONTRACTOR.

15. THE FOLLOWING MIXTURE REQUIREMENTS ARE APPLICABLE FOR THIS PROJECT:

NEW MAINLINE PAVEMENT AND RESURFACING — WIDENING AND DRIVEWAY PAVING

MIXTURE USE(S)	HMA FULL DEPTH BIND (LOWER LIFTS)	HMA FULL DEPTH BIND (TOP LIFT)	HMA FULL DEPTH SURFACE	HMA SURFACE (RESURFACING)	MACH METH LEVEL BIND	HMA SHOULDERS	HMA BASE CSE, HMA BASE CSE WID, PATCHING	INCIDENTAL BIT SURFACING
AC/PG	PG 64-22	SBS-PG 64-28	SBS-PG 64-28	SBS-PG 64-22	PG 64-22	PG 58-22	PG 58-22	PG 64-22
DESIGN AIR VOIDS	4.0% @ N DESIGN=50	4.0% @ N DESIGN=50	4.0% @ N DESIGN=50	4.0% @ N DESIGN=50	4.0% @ N DESIGN=50	2.0% @ N DESIGN=30	2.0% @ N DESIGN=50	4.0% @ N DESIGN=50
MIX COMPOSITION: (GRADATION MIXTURE)	IL-19.0	IL-19.0	IL-9.5 OR 12.5	IL-9.5 OR 12.5	IL-9.5	BAM (OTHER)	IL-19.0	IL-9.5 OR 12.5
FRICTION AGGREGATE	N/A	N/A	MIX "C"	MIX "C"	N/A	N/A	N/A	MIX "C"

16. AN EMULSIFIED ASPHALT PRIME SHALL BE REQUIRED FOR THE PRIMING OF THE MAINLINE PAVEMENT TO BE RESURFACED. THE AREA PRIMED SHALL BE LIMITED TO THAT WHICH WILL BE COVERED WITH HMA THAT SAME DAY.

17. EXISTING RAISED REFLECTIVE PAVEMENT MARKERS SHALL BE REMOVED PRIOR TO RESURFACING.

18. THE FOLLOWING RATES OF APPLICATION HAVE BEEN ASSUMED IN CALCULATING PLAN QUANTITIES:

AGGREGATE (SURFACE, BASE, SUBBASE, OR BACKFILL)	2.05 TON/CUBIC YARD
ROCKFILL	1.89 TON/CUBIC YARD
STONE DUMPED RIPRAP	1.50 TON/CUBIC YARD
BITUMINOUS MATERIALS (PRIME COAT)	0.00038 TON/SQUARE YARD (ON PAVEMENT)
BITUMINOUS MATERIALS (PRIME COAT)	0.001425 TON/SQUARE YARD (ON AGGREGATE)
BITUMINOUS MATERIALS (COVER & SEAL COAT)	0.001425 TON/SQUARE YARD
COVER COAT AGGREGATE	0.01 TON/SQUARE YARD
SEAL COAT AGGREGATE	0.01 TON/SQUARE YARD
AGGREGATE (PRIME COAT)	0.002 TON/SQUARE YARD
BITUMINOUS SURFACE/BINDER (112 LBS)	0.056 TON/SQUARE YARD•INCH
BITUMINOUS SURFACE MIX D OR E (120 LBS)	0.060 TON/SQUARE YARD•INCH
NITROGEN FERTILIZER NUTRIENT	90 LBS/ACRE
PHOSPHOROUS FERTILIZER NUTRIENT	90 LBS/ACRE
POTASSIUM FERTILIZER NUTRIENT	90 LBS/ACRE
AGRICULTURE GROUND LIMESTONE	2 TON/ACRE
MULCH	2 TON/ACRE
LIME FOR MODIFIED SOILS, 12"	40 LBS/SQUARE YARD

19. ALL DETAILS IN THE PLANS SHALL GOVERN CONSTRUCTION OF THIS PROJECT, AND IN CASE OF CONFLICT WITH ANY STANDARD DRAWINGS INCLUDED. THE SAID DETAILS SHALL TAKE PRECEDENCE AND GOVERN.

20. ALL PERMANENT AND TEMPORARY SIDE SLOPES SHALL BE CAPPED WITH A MINIMUM OF 8 FT OF UNRESTRICTED SOIL MEASURED HORIZONTALLY. THE PROPOSED RIPRAP ARMOR THICKNESS IS NOT CONSIDERED PART OF THE CAP. SEE THE DETAIL FOR CAPPING RESTRICTED FILL ON SHEET 104 IN THESE PLANS.

COMMITMENTS

THE FIELD/RESIDENT ENGINEER SHALL CONTACT DISTRICT 6 STUDIES & PLANS AT 217-782-6990 CONCERNING ANY MAJOR PLAN CHANGES TO MAKE SURE NO PREVIOUS COMMITMENTS (NOT LISTED) WERE MADE AFFECTING THE DESIGN, AND TO ALLOW IMPROVEMENTS IN THE DESIGN FOR FUTURE PROJECTS

SEEDING SHALL BE COMPLETED AS DESIGNATED IN THE STORM WATER POLLUTION PREVENTION PLAN. ALL AREAS OF POTENTIAL FOR EROSION SHALL BE SEEDED BY OCTOBER 1, AND SHALL NOT BE REOPENED UNTIL AFTER THE WINTER SHUT DOWN PERIOD (SEE SWPPP).

ROADS SHALL BE OPENED AT ALL TIMES TO PROVIDE FARMERS ACCESS TO NECESSARY FARM FIELDS.

INDIVIDUAL 404 PERMIT

DUST CONTROL WILL BE HANDLED PROPERLY BY IDOT'S CONTRACTOR. WATER TRUCKS SHALL BE PROVIDED TO KEEP DUST FROM THE PREGRADE FROM BLOWING NEAR HOMES.

AGREEMENT WITH IDNR ON RAMP & PARKING AREA JURISDICTION

STORM WATER POLLUTION PREVENTION PLAN REQUIRED FOR NPDES PERMIT BY IEPA.

SWPPP/ NPDES PERMIT

DISTRICT SIX

EXAMINED March 20 20 09
Samuel Hearn
OPERATIONS ENGINEER

EXAMINED March 25 20 09
Samuel Hearn
PROGRAM IMPLEMENTATION ENGINEER

EXAMINED March 27 20 09
PROGRAM DEVELOPMENT ENGINEER

D-96-506-07

FILE NAME = K:\07\07021\v8-ns\shtcover.dgn	USER NAME = CFC__	DESIGNED -	REVISED -	STATE OF ILLINOIS DEPARTMENT OF TRANSPORTATION	GENERAL NOTES AND COMMITMENTS	F.A.P RTE.	SECTION	COUNTY	TOTAL SHEETS	SHEET NO.
		DRAWN -	REVISED -			614	144(B-1, B-2)	CASS, MASON	351	2
	PLOT SCALE = 50.0000 ' / IN.	CHECKED -	REVISED -					CONTRACT NO. 72A76		
	PLOT DATE = 03/26/2009	DATE -	REVISED -		SCALE: SHEET NO. OF SHEETS STA. TO STA.	FED. ROAD DIST. NO.	ILLINOIS	FED. AID PROJECT		

ILLINOIS DEPARTMENT OF TRANSPORTATION

SUMMARY OF QUANTITIES

LOCATION OF WORK				RURAL 80% Federal 20% State CASS COUNTY CONSTRUCTION TYPE CODE				RURAL 80% Federal 20% State MASON COUNTY CONSTRUCTION TYPE CODE		
CODE NO.	ITEM	UNIT	TOTAL	ROADWAY I000	PR SN 009-2509 X071-2A	PR SN 009-0510 X028-2A		ROADWAY I000	PR SN 063 0500 X071-2A	
20100500	TREE REMOVAL, ACRES	ACRE	18.9	11.9	0.0	0.0	0.0	7.0	0.0	0.0
20200100	EARTH EXCAVATION	CU YD	84523	39963	0	0	0	44560	0	0
20201200	REMOVAL AND DISPOSAL OF UNSUITABLE MATERIAL	CU YD	9300	1800	0	0	0	7500	0	0
20300100	CHANNEL EXCAVATION	CU YD	19557	14566	0	0	0	4991	0	0
20400800	FURNISHED EXCAVATION	CU YD	163043	74441	0	0	0	88602	0	0
20700400	POROUS GRANULAR EMBANKMENT, SPECIAL	CU YD	351	0	0	169	0	0	182	0
20800150	TRENCH BACKFILL	CU YD	57	16	0	0	0	41	0	0
21101615	TOPSOIL FURNISH AND PLACE, 4"	SQ YD	131498	51982	0	0	0	79516	0	0
25000200	SEEDING, CLASS 2	ACRE	27.25	10.75	0	0	0	16.50	0	0
25000400	NITROGEN FERTILIZER NUTRIENT	POUND	2445	967	0	0	0	1478	0	0
25000500	PHOSPHORUS FERTILIZER NUTRIENT	POUND	2445	967	0	0	0	1478	0	0
25000600	POTASSIUM FERTILIZER NUTRIENT	POUND	2445	967	0	0	0	1478	0	0
25000700	AGRICULTURAL GROUND LIMESTONE	TON	54.4	21.5	0.0	0.0	0.0	32.9	0.0	0.0
Δ 25000750	MOWING	ACRE	27.25	10.75	0	0	0	16.50	0	0
25100115	MULCH, METHOD 2	ACRE	27.25	10.75	0	0	0	16.50	0	0
25101005	HEAVY DUTY EXCELSIOR BLANKET	SQ YD	250	100	0	0	0	150	0	0
28000200	EARTH EXCAVATION FOR EROSION CONTROL	CU YD	46	11	0	0	0	35	0	0
28000250	TEMPORARY EROSION CONTROL SEEDING	POUND	10868	4296	0	0	0	6572	0	0
28000400	PERIMETER EROSION BARRIER	FOOT	11765	5505	0	0	0	6260	0	0
28000500	INLET AND PIPE PROTECTION	EACH	10	5	0	0	0	5	0	0
28000600	SEEDING, CLASS 7	ACRE	27.25	10.75	0	0	0	16.50	0	0
28001000	AGGREGATE (EROSION CONTROL)	TON	222	84	0	0	0	138	0	0
28100107	STONE RIPRAP, CLASS A4	SQ YD	1311	0	0	0	0	0	1311	0
28100109	STONE RIPRAP, CLASS A5	SQ YD	3273	0	0	3273	0	0	0	0
28100807	STONE DUMPED RIPRAP, CLASS A4	TON	10566	5529	0	0	0	5037	0	0
28100809	STONE DUMPED RIPRAP, CLASS A5	TON	3559	3559	0	0	0	0	0	0
28200200	FILTER FABRIC	SQ YD	31044	15802	0	3273	0	10658	1311	0
30200650	PROCESSING MODIFIED SOIL 12"	SQ YD	22178	10883	0	0	0	11295	0	0
30201500	LIME	TON	443.6	217.7	0.0	0.0	0.0	225.9	0.0	0.0
31100910	SUB-BASE GRANULAR MATERIAL, TYPE A 12"	SQ YD	2679	0	0	0	0	2679	0	0
31101000	SUB-BASE GRANULAR MATERIAL, TYPE B	TON	1670	0	0	0	0	1670	0	0
31101900	SUB-BASE GRANULAR MATERIAL, TYPE C	TON	2277	1207	0	0	0	1070	0	0
35501332	HOT-MIX ASPHALT BASE COURSE, 12"	SQ YD	2652	943	0	0	0	1709	0	0
35600724	HOT-MIX ASPHALT BASE COURSE WIDENING, 12"	SQ YD	641	44	0	0	0	597	0	0
35800100	PREPARATION OF BASE	SQ YD	331	100	0	0	0	231	0	0
35800200	AGGREGATE BASE REPAIR	TON	14	4	0	0	0	10	0	0
40200100	AGGREGATE SURFACE COURSE, TYPE A	TON	986	0	0	0	0	986	0	0
40200800	AGGREGATE SURFACE COURSE, TYPE B	TON	2318	1607	0	0	0	711	0	0

Δ - Non-participating

D-96-506-07

FILE NAME = c:\pw_work\PWIDOT\LAUGHLINRL\d0134498\sheet500.dgn	USER NAME = laughlinrl	DESIGNED -	REVISED -	STATE OF ILLINOIS DEPARTMENT OF TRANSPORTATION	SUMMARY OF QUANTITIES	F.A.P RTE.	SECTION	COUNTY	TOTAL SHEETS	SHEET NO.
	PLOT SCALE = 100.0000 ' / IN.	DRAWN -	REVISED -			614	144(B-1, B-2)	CASS, MASON	351	3
	PLOT DATE = Mar-31-2009 07:28:27AM	CHECKED -	REVISED -					CONTRACT NO. 72A76		
		DATE -	REVISED -		SCALE: SHEET NO. 1 OF 5 SHEETS STA. TO STA.	FED. ROAD DIST. NO.	ILLINOIS	FED. AID PROJECT		

ILLINOIS DEPARTMENT OF TRANSPORTATION

SUMMARY OF QUANTITIES

LOCATION OF WORK				RURAL 80% Federal 20% State CASS COUNTY CONSTRUCTION TYPE CODE				RURAL 80% Federal 20% State MASON COUNTY CONSTRUCTION TYPE CODE		
CODE NO.	ITEM	UNIT	TOTAL	ROADWAY 1000	PR SN 009-2509 X071-2A	PR SN 009-0510 X028-2A		ROADWAY 1000	PR SN 063 0500 X071-2A	
40300400	BITUMINOUS MATERIALS (COVER AND SEAL COATS)	TON	15	0	0	0	0	15	0	0
40300600	SEAL COAT AGGREGATE	TON	106	0	0	0	0	106	0	0
40600200	BITUMINOUS MATERIALS (PRIME COAT)	TON	18.9	1.0	0	0	0	17.9	0	0
40600300	AGGREGATE (PRIME COAT)	TON	59.0	5.1	0	0	0	53.9	0	0
40600625	LEVELING BINDER (MACHINE METHOD), N50	TON	1029	41	0	0	0	988	0	0
40600895	CONSTRUCTING TEST STRIP	EACH	8	4	0	0	0	4	0	0
40600982	HOT-MIX ASPHALT SURFACE REMOVAL - BUTT JOINT	SQ YD	1197	585	0	0	0	612	0	0
40600990	TEMPORARY RAMP	SQ YD	579	92	0	0	0	487	0	0
40603060	HOT-MIX ASPHALT BINDER COURSE, IL-19.0, N50	TON	2908	926	0	0	0	1982	0	0
40603510	POLYMERIZED HOT-MIX ASPHALT SURFACE COURSE, MIX "C", N50	TON	2528	201	0	0	0	2327	0	0
40701951	HOT-MIX ASPHALT PAVEMENT (FULL-DEPTH), 13 1/2"	SQ YD	12986	5953	0	0	0	7033	0	0
40800050	INCIDENTAL HOT-MIX ASPHALT SURFACING	TON	471	229	0	0	0	242	0	0
42000300	PORTLAND CEMENT CONCRETE PAVEMENT 8"	SQ YD	469	0	0	0	0	469	0	0
42001165	BRIDGE APPROACH PAVEMENT	SQ YD	360	120	0	0	0	240	0	0
42001400	BRIDGE APPROACH PAVEMENT (SPECIAL)	SQ YD	120	0	0	0	0	120	0	0
42001430	BRIDGE APPROACH PAVEMENT CONNECTOR (FLEXIBLE)	SQ YD	24	0	0	0	0	24	0	0
42001200	PAVEMENT FABRIC	SQ YD	469	0	0	0	0	469	0	0
44000100	PAVEMENT REMOVAL	SQ YD	12564	5255	0	0	0	7309	0	0
44000198	HOT-MIX ASPHALT SURFACE REMOVAL - VARIABLE DEPTH	SQ YD	28464	1993	0	0	0	26471	0	0
44000700	APPROACH SLAB REMOVAL	SQ YD	680	340	0	0	0	340	0	0
44004250	PAVED SHOULDER REMOVAL	SQ YD	560	133	0	0	0	427	0	0
44200144	PAVEMENT PATCHING, TYPE II, 12 INCH	SQ YD	402	30	0	0	0	372	0	0
44200148	PAVEMENT PATCHING, TYPE III, 12 INCH	SQ YD	180	0	0	0	0	180	0	0
44200150	PAVEMENT PATCHING, TYPE IV, 12 INCH	SQ YD	60	0	0	0	0	60	0	0
48101200	AGGREGATE SHOULDERS, TYPE B	TON	1675	461	0	0	0	1214	0	0
48203021	HOT-MIX ASPHALT SHOULDERS, 6"	SQ YD	608	183	0	0	0	425	0	0
48203029	HOT-MIX ASPHALT SHOULDERS, 8"	SQ YD	13575	2795	0	0	0	10780	0	0
48203100	HOT-MIX ASPHALT SHOULDERS	TON	271	46	0	0	0	225	0	0
50100300	REMOVAL OF EXISTING STRUCTURES NO. 1	EACH	1	0	0	0	0	0	1	0
50100400	REMOVAL OF EXISTING STRUCTURES NO. 2	EACH	1	0	0	1	0	0	0	0
50100500	REMOVAL OF EXISTING STRUCTURE NO. 3	EACH	1	0	1	0	0	0	0	0
50104650	SLOPE WALL REMOVAL	SQ YD	4200	3400	0	0	0	800	0	0
50105210	REMOVE EXISTING CULVERTS	FOOT	236	78	0	0	0	158	0	0
50200100	STRUCTURE EXCAVATION	CU YD	1189	0	0	1043	0	0	146	0
50200300	COFFERDAM EXCAVATION	CU YD	595	0	0	595	0	0	0	0
50200900	COFFERDAM (PIER 4)	EACH	1	0	0	1	0	0	0	0
50201000	COFFERDAM (PIER 5)	EACH	1	0	0	1	0	0	0	0
50300100	FLOOR DRAINS	EACH	10	0	0	10	0	0	0	0

ILLINOIS DEPARTMENT OF TRANSPORTATION
SUMMARY OF QUANTITIES

LOCATION OF WORK				RURAL 80% Federal 20% State CASS COUNTY CONSTRUCTION TYPE CODE				RURAL 80% Federal 20% State MASON COUNTY CONSTRUCTION TYPE CODE		
CODE NO.	ITEM	UNIT	TOTAL	ROADWAY 1000	PR SN 009-2509 X071-2A	PR SN 009-0510 X028-2A		ROADWAY 1000	PR SN 063-0500 X071-2A	
50300225	CONCRETE STRUCTURES	CU YD	1645.8	0.0	0.0	1556.1	0.0	0.0	89.7	0.0
50300255	CONCRETE SUPERSTRUCTURE	CU YD	2708.6	0.0	0.0	2264.1	0.0	0.0	444.5	0.0
50300260	BRIDGE DECK GROOVING	SQ YD	8095	0	0	6814	0	0	1281	0
50300265	SEAL COAT CONCRETE	CU YD	243	0	0	243	0	0	0	0
50300280	CONCRETE ENCASEMENT	CU YD	42.6	0.0	0.0	36.0	0.0	0.0	6.6	0.0
50300300	PROTECTIVE COAT	SQ YD	10358	0	0	8759	0	0	1599	0
50500105	FURNISHING AND ERECTING STRUCTURAL STEEL	L SUM	1	0	0	0.88	0	0	0.12	0
X0326090	ERECTING STRUCTURAL STEEL	POUND	107,680	0	107,680		0	0	0	0
50500505	STUD SHEAR CONNECTORS	EACH	20988	0	0	17064	0	0	3924	0
50800105	REINFORCEMENT BARS	POUND	73880	0	41680	20150	0	0	12050	0
50800205	REINFORCEMENT BARS, EPOXY COATED	POUND	922090	0	0	763920	0	0	158170	0
50800515	BAR SPLICERS	EACH	1257	0	0	82	0	0	1175	0
51200958	FURNISHING METAL SHELL PILES 14" X 0.250"	FOOT	85	0	0	85	0	0	0	0
51201900	FURNISHING STEEL PILES HP14X89	FOOT	11300	0	0	10560	0	0	740	0
51202905	DRIVING PILES	FOOT	11300	0	0	10560	0	0	740	0
51203900	TEST PILE STEEL HP14X89	EACH	4	0	0	2	0	0	2	0
51204550	PILE LOAD TEST	EACH	1	0	0	1	0	0	0	0
51204650	PILE SHOES	EACH	138	0	0	126	0	0	12	0
51205200	TEMPORARY SHEET PILING	SQ FT	2427	0	2196	0	0	0	231	0
51500100	NAME PLATES	EACH	2	0	0	1	0	0	1	0
51602000	PERMANENT CASING	FOOT	876	0	0	432	0	0	444	0
* 51603000	DRILLED SHAFT IN SOIL	CU YD	541.6	0.0	0.0	372.0	0.0	0.0	169.6	0.0
* 51604000	DRILLED SHAFT IN ROCK	CU YD	64.8	0.0	0.0	46.0	0.0	0.0	18.8	0.0
52000110	PREFORMED JOINT STRIP SEAL	FOOT	42	0	0	42	0	0	0	0
52000224	FINGER PLATE EXPANSION JOINT, 7"	FOOT	80	0	0	80	0	0	0	0
52000228	FINGER PLATE EXPANSION JOINT, 8"	FOOT	40	0	0	40	0	0	0	0
52000600	FABRIC REINFORCED ELASTOMERIC TROUGH	FOOT	141	0	0	141	0	0	0	0
52100010	ELASTOMERIC BEARING ASSEMBLY, TYPE I	EACH	6	0	0	6	0	0	0	0
52100020	ELASTOMERIC BEARING ASSEMBLY, TYPE II	EACH	18	0	0	18	0	0	0	0
52100030	ELASTOMERIC BEARING ASSEMBLY, TYPE III	EACH	12	0	0	12	0	0	0	0
52100520	ANCHOR BOLTS, 1"	EACH	24	0	0	0	0	0	24	0
52100530	ANCHOR BOLTS, 1 1/4"	EACH	24	0	0	0	0	0	24	0
52100540	ANCHOR BOLTS, 1 1/2"	EACH	180	0	0	180	0	0	0	0
54003000	CONCRETE BOX CULVERTS	CU YD	210.4	0.0	210.4	0.0	0.0	0.0	0.0	0.0
54200637	PIPE CULVERTS, TYPE 1, CORRUGATED STEEL OR ALUMINUM CULVERT PIPE 12"	FOOT	104	0	0	0	0	104	0	0
54200640	PIPE CULVERTS, TYPE 1, CORRUGATED STEEL OR ALUMINUM CULVERT PIPE 15"	FOOT	501	45	0	0	0	456	0	0
54200649	PIPE CULVERTS, TYPE 1, CORRUGATED STEEL OR ALUMINUM CULVERT PIPE 24"	FOOT	140	0	0	0	0	140	0	0
54200673	PIPE CULVERTS, TYPE 1, CORRUGATED STEEL OR ALUMINUM CULVERT PIPE 48"	FOOT	182	0	0	0	0	182	0	0

*SPECIALTY ITEMS

Rev.

FILE NAME = c:\pw_work\PWIDOT\LAUGHLINRL\d0134498\sht500.dgn	USER NAME = laughlinrl	DESIGNED -	REVISED -
	PLOT SCALE = 100.0000 ' / IN.	DRAWN -	REVISED -
	PLOT DATE = Mar-31-2009 07:28:38AM	CHECKED -	REVISED -
		DATE -	REVISED -

STATE OF ILLINOIS
DEPARTMENT OF TRANSPORTATION

SUMMARY OF QUANTITIES

SCALE: | SHEET NO. 3 OF 5 SHEETS | STA. | TO STA.

F.A.P RTE.	SECTION	COUNTY	TOTAL SHEETS	SHEET NO.
614	144(B-1, B-2)	CASS, MASON	351	5

CONTRACT NO. 72A76

FED. ROAD DIST. NO. | ILLINOIS | FED. AID PROJECT

ILLINOIS DEPARTMENT OF TRANSPORTATION

SUMMARY OF QUANTITIES

LOCATION OF WORK				RURAL 80% Federal 20% State CASS COUNTY CONSTRUCTION TYPE CODE				RURAL 80% Federal 20% State MASON COUNTY CONSTRUCTION TYPE CODE		
CODE NO.	ITEM	UNIT	TOTAL	ROADWAY 1000	PR SN 009-2509 X071-2A	PR SN 009-0510 X028-2A		ROADWAY 1000	PR SN 063 0500 X071-2A	
54200885	PIPE CULVERTS, TYPE 1, CORRUGATED STEEL OR ALUMINUM CULVERT PIPE 60"	FOOT	160	160	0	0	0	0	0	0
5421A015	PIPE CULVERTS, CLASS A, TYPE 1 15" (TEMPORARY)	FOOT	244	84	0	0	0	160	0	0
54215547	METAL END SECTIONS 12"	EACH	4	1	0	0	0	3	0	0
54215550	METAL END SECTIONS 15"	EACH	12	0	0	0	0	12	0	0
54215559	METAL END SECTIONS 24"	EACH	4	0	0	0	0	4	0	0
54215583	METAL END SECTIONS 48"	EACH	4	0	0	0	0	4	0	0
54215595	METAL END SECTIONS 60"	EACH	4	4	0	0	0	0	0	0
55019500	STORM SEWERS, TYPE 1, REINFORCED CONCRETE CULVERT, STORM DRAIN, AND SEWER PIPE, CLASS IV 12"	FOOT	75	41	0	0	0	34	0	0
58700300	CONCRETE SEALER	SQ FT	2400	0	0	2400	0	0	0	0
59100100	GEOCOMPOSITE WALL DRAIN	SQ YD	168	0	0	76	0	0	92	0
60103500	PIPE DRAINS, CORRUGATED STEEL 12"	FOOT	11	11	0	0	0	0	0	0
60109580	PIPE UNDERDRAINS FOR STRUCTURES 4"	FOOT	324	0	0	168	0	0	156	0
60218400	MANHOLES, TYPE A, 4'-DIAMETER, TYPE 1 FRAME, CLOSED LID	EACH	1	0	0	0	0	1	0	0
60236200	INLETS, TYPE A, TYPE 8 GRATE	EACH	1	0	0	0	0	1	0	0
60900240	TYPE C INLET BOX, STANDARD 609006	EACH	6	2	0	0	0	4	0	0
61100500	EXPLORATION TRENCH 52" DEPTH	FOOT	1200	600	0	0	0	600	0	0
60100915	PIPE DRAINS 6"	FOOT	1200	600	0	0	0	600	0	0
61100605	MISCELLANEOUS CONCRETE	CU YD	50	25	0	0	0	25	0	0
* 63000001	STEEL PLATE BEAM GUARD RAIL, TYPE A, 6 FOOT POSTS	FOOT	2732.5	1375.0	0	0	0	1357.5	0	0
* 63100085	TRAFFIC BARRIER TERMINAL, TYPE 6	EACH	8	2	0	0	0	6	0	0
* 63100167	TRAFFIC BARRIER TERMINAL, TYPE 1 (SPECIAL) TANGENT	EACH	8	2	0	0	0	6	0	0
63200310	GUARDRAIL REMOVAL	FOOT	2224	1164	0	0	0	1060	0	0
66201120	CONCRETE SHOULDER CURB	FOOT	35	10	0	0	0	25	0	0
66600105	FURNISHING AND ERECTING RIGHT-OF-WAY MARKERS	EACH	48	29	0	0	0	19	0	0
67000400	ENGINEER'S FIELD OFFICE, TYPE A	CAL MO	30	18	0	0	0	12	0	0
67000600	ENGINEER'S FIELD LABORATORY	CAL MO	30	18	0	0	0	12	0	0
67100100	MOBILIZATION	L SUM	1	0.5	0	0	0	0.5	0	0
70100450	TRAFFIC CONTROL AND PROTECTION, STANDARD 701201	L SUM	1	0.5	0	0	0	0.5	0	0
70100460	TRAFFIC CONTROL AND PROTECTION, STANDARD 701306	L SUM	1	0.5	0	0	0	0.5	0	0
70100500	TRAFFIC CONTROL AND PROTECTION, STANDARD 701326	L SUM	1	0.5	0	0	0	0.5	0	0
70101000	TRAFFIC CONTROL AND PROTECTION, STANDARD 701331 (SPECIAL)	EACH	1	1	0	0	0	0	0	0
70101205	TRAFFIC CONTROL AND PROTECTION, STANDARD 701321 (SPECIAL)	EACH	2	1	0	0	0	1	0	0
70103815	TRAFFIC CONTROL SURVEILLANCE	CAL DA	20	10	0	0	0	10	0	0
70106500	TEMPORARY BRIDGE TRAFFIC SIGNALS	EACH	2	1	0	0	0	1	0	0
70106800	CHANGEABLE MESSAGE SIGN	CAL MO	2	0	0	0	0	2	0	0
70300100	SHORT-TERM PAVEMENT MARKING	FOOT	7914	2484	0	0	0	5430	0	0
70300230	TEMPORARY PAVEMENT MARKING - LINE 5"	FOOT	43909	10350	0	0	0	33559	0	0

*Specialty Items

ILLINOIS DEPARTMENT OF TRANSPORTATION

SUMMARY OF QUANTITIES

LOCATION OF WORK				RURAL 80% Federal 20% State CASS COUNTY CONSTRUCTION TYPE CODE				RURAL 80% Federal 20% State MASON COUNTY CONSTRUCTION TYPE CODE		
CODE NO.	ITEM	UNIT	TOTAL	ROADWAY 1000	PR SN 009-2509 X071-2A	PR SN 009-0510 X028-2A		ROADWAY 1000	PR SN 063 0500 X071-2A	
70301000	WORK ZONE PAVEMENT MARKING REMOVAL	SQ FT	876	276	0	0	0	600	0	0
70400100	TEMPORARY CONCRETE BARRIER	FOOT	1588	788	0	0	0	800	0	0
70400200	RELOCATE TEMPORARY CONCRETE BARRIER	FOOT	800	0	0	0	0	800	0	0
70500100	TEMPORARY STEEL PLATE BEAM GUARD RAIL, TYPE A	FOOT	325	325	0	0	0	0	0	0
* 72000100	SIGN PANEL - TYPE 1	SQ FT	35	9	0	0	0	26	0	0
* 72800100	TELESCOPING STEEL SIGN SUPPORT	FOOT	132	24	0	0	0	108	0	0
* 78001100	PAINT PAVEMENT MARKING - LETTERS AND SYMBOLS	SQ FT	5	0	0	0	0	5	0	0
* 78001120	PAINT PAVEMENT MARKING - LINE 5"	FOOT	722	0	0	0	0	722	0	0
* 78001150	PAINT PAVEMENT MARKING - LINE 12"	FOOT	420	0	0	0	0	420	0	0
* 78100100	RAISED REFLECTIVE PAVEMENT MARKER	EACH	238	59	0	0	0	179	0	0
* 78200410	GUARDRAIL MARKERS, TYPE A	EACH	37	20	0	0	0	17	0	0
* 78200520	BARRIER WALL MARKERS, TYPE B	EACH	22	18	0	0	0	4	0	0
* 78201000	TERMINAL MARKER - DIRECT APPLIED	EACH	8	2	0	0	0	6	0	0
78300100	PAVEMENT MARKING REMOVAL	SQ FT	9281	4312	0	0	0	4969	0	0
78300200	RAISED REFLECTIVE PAVEMENT MARKER REMOVAL	EACH	238	59	0	0	0	179	0	0
X0320870	BRACED EXCAVATION	CY YD	399	0	0	399	0	0	0	0
X0323236	TEMPORARY INLET	EACH	4	2	0	0	0	2	0	0
X0323716	ACCESS GATE, DOUBLE, 30 FOOT	EACH	1	0	0	0	0	1	0	0
X0323830	DRAINAGE SCUPPERS, DS-11	EACH	38	0	0	32	0	0	6	0
X0323988	TEMPORARY SOIL RETENTION SYSTEM	SQ FT	60	0	0	0	0	0	60	0
X0325607	GROUND STABILIZATION GEOSYNTHETIC	SQ YD	9000	9000	0	0	0	0	0	0
X5020501	UNDERWATER STRUCTURE EXCAVATION PROTECTION - LOCATION 1	EACH	1	0	0	1	0	0	0	0
X7050165	TEMPORARY TRAFFIC BARRIER TERMINAL, TYPE 1 (SPECIAL)	EACH	2	2	0	0	0	0	0	0
X7200201	WIDTH RESTRICTION SIGNING	L SUM	1	0	0	0	0	1	0	0
* X7800620	URETHANE PAVEMENT MARKING - LINE 5"	FOOT	43909	10350	0	0	0	33559	0	0
* X7800680	URETHANE PAVEMENT MARKING - LINE 24"	FOOT	30	0	0	0	0	30	0	0
* XX005519	STONE DUMPED RIPRAP, CLASS A4 (SPECIAL)	TON	292	0	0	0	0	292	0	0
XX005569	MAILBOX REMOVAL AND REINSTALLATION	EACH	1	0	0	0	0	1	0	0
* X2054505	ROCKFILL (SPECIAL)	TON	17339	0	0	0	0	17339	0	0
Z0001900	ASBESTOS BEARING PAD REMOVAL	EACH	636	0	240	176	0	0	220	0
Z0030260	IMPACT ATTENUATORS, TEMPORARY (FULLY REDIRECTIVE, NARROW), TEST LEVEL 3	EACH	4	2	0	0		2	0	
Z0030330	IMPACT ATTENUATORS, RELOCATE (FULLY REDIRECTIVE), TEST LEVEL 3	EACH	2	0	0	0	0	2	0	
Z0047600	PUMPING	MONTH	1	0	0	0	0	1	0	0
* Z0054515	ROCK FILL - EMBANKMENT	TON	19200	11200	0	0	0	8000	0	0
* Z0054517	ROCKFILL - FOUNDATION	TON	300	0	300	0	0	0	0	0
X0323718	PUMP POND DRY	L SUM	1	1	0	0	0	0	0	0
X0326483	TEMPORARY DITCH	CU YD	1600	0	0	0	0	1600	0	0
Z0013798	CONSTRUCTION LAYOUT	L SUM	1.0	1.0						

* Specialty Items

FILE NAME = c:\pw_work\PWIDOT\LAUGHLINRL\d0134498\sheet500.dgn	USER NAME = laughlinrl	DESIGNED -	REVISED -	STATE OF ILLINOIS DEPARTMENT OF TRANSPORTATION	SUMMARY OF QUANTITIES	F.A.P RTE. 614	SECTION 144(B-1, B-2)	COUNTY CASS, MASON	TOTAL SHEETS 351 / SHEET NO. 7
	PLOT SCALE = 100.0000 ' / IN.	DRAWN -	REVISED -						CONTRACT NO. 72A76
	PLOT DATE = Mar-31-2009 07:28:50AM	CHECKED -	REVISED -		SCALE: SHEET NO. 5 OF 5 SHEETS STA. TO STA.	FED. ROAD DIST. NO.	ILLINOIS	FED. AID PROJECT	
		DATE -	REVISED -						

SUMMARY OF EARTHWORK						
	1	2	3	4	5	6
LOCATION	THEORETICAL		ADJUSTED	EXCESS (BORROW)	CUMMULATIVE EXCESS (BORROW)	FURNISHED EXCAVATION
	CUT (BANK)	FILL (COMPACTED)	FILL * 1.25 (BANK)			
	CU YD	CU YD	CU YD	CU YD	CU YD	CU YD
PRE-STAGE I (MASON COUNTY)						
STA 864+50 TO STA 867+50	47	0	0	47	47	(39)
SUBTOTAL PRE-STAGE I	**47**	**0**	**0**	**47**	**47**	**(39)**
STAGE I (MASON COUNTY)						
STA 853+00 TO STA 869+20	2090	2686	3277	(1187)	(1187)	972
STA 869+20 TO STA 874+00	615	7448	9087	(8472)	(9658)	6944
SUBTOTAL STAGE I (WOLF LAKE)	**2705**	**10134**	**12363**	**(9658)**	**(9658)**	**7916**
STAGE II (MASON COUNTY)						
STA 853+00 TO STA 869+20	680	4144	5056	(4376)	(4376)	3586
STA 869+20 TO STA 874+00	25	2377	2900	(2875)	(7251)	2357
SUBTOTAL STAGE II (WOLF LAKE)	**705**	**6521**	**7956**	**(7251)**	**(7251)**	**5943**
STAGE I/II (MASON COUNTY)						
STA 874+00 TO STA 885+00	2513	24130	29439	(26926)	(26926)	22069
STA 885+00 TO STA 901+00	4720	53017	64681	(59961)	(86886)	49147
STA 901+00 TO STA 907+00	18464.8	18706.5	22822	(4357)	(91243)	3565
SUBTOTAL STAGE I/II (MASON CO.)	**25698**	**95854**	**116941**	**(91243)**	**(91243)**	**74781**
STAGE I/II (CASS COUNTY)						
STA 907+00 TO STA 918+00	7110.2	526.9	643	6467	6467	(5303)
STA 918+00 TO STA 937+50	6744	65775	80246	(73502)	(67034)	60245
STA 937+50 TO STA 948+00	963	20175	24614	(23651)	(90685)	19385
STA 948+00 TO STA 955+00	771	746	910	(139)	(90824)	114
SUBTOTAL STAGE I/II (CASS CO.)	**15588**	**87223**	**106412**	**(90824)**		**74441**
STAGE III (MASON COUNTY)						
STA 867+50 TO STA 878+50	356	453	553	(197)	(197)	161
STA 878+50 TO STA 892+00	1844	370	451	1393	1196	(1142)
STA 892+00 TO STA 905+50	9013	8530	10407	(1394)	(198)	1139
STA 905+50 TO STA 907+00	4192.6	0	0	4193	3995	(3438)
SUBTOTAL STAGE III (MASON CO.)	**15406**	**9353**	**11411**	**3995**	**3995**	**(3280)**
STAGE III (CASS COUNTY)						
STA 907+00 TO STA 923+00	15981	159	194	15787	15787	(12945)
STA 923+00 TO STA 939+50	6578	9810	11968	(5390)	10396	4416
STA 939+50 TO STA 950+50	1814	2324	2835	(1021)	9375	837
STA 950+50 TO STA 955+00	2	323	394	(392)	8983	321
SUBTOTAL STAGE III (CASS CO.)	**24375**	**12616**	**15392**	**8983**	**8983**	**(7371)**
NORTH BANK (CASS COUNTY)						
STA 16+50 TO STA 20+50	11977	1	1	11976	11976	(9820)
SUBTOTAL NORTH BANK (CASS CO.)	**11977**	**1**	**1**	**11976**	**11976**	**(9820)**
NORTH BANK (MASON COUNTY)						
STA 20+50 TO STA 25+00	4991	108	132	4860	4860	(3985)
SUBTOTAL NORTH BANK (MASON CO.)	**4991**	**108**	**132**	**4860**	**4860**	**(3985)**
SOUTH BANK (CASS COUNTY)						
STA 25+00 TO STA 35+00	2589	64	78	2511	2511	(2059)
SUBTOTAL SOUTH BANK (CASS CO.)	**2589**	**64**	**78**	**2511**	**2511**	**(2059)**
EARTHWORK TOTALS						
SUBTOTAL FOR MASON COUNTY	**49,552**	**121,970**	**148,803**	**(99,251)**		**88,602**
SUBTOTAL FOR CASS COUNTY	**54,529**	**99,904**	**121,883**	**(67,354)**		**74,441**
EARTHWORK TOTALS	**104,081**	**221,873**	**270,686**	**(166,605)**		**163,042**

NOTE: NORTH BANK AND SOUTH BANK EARTH EXCAVATION PAID FOR AS CHANNEL EXCAVATION.

NOTE: STAGE III, N. BANK, AND S. BANK EXCESS IS NOT USED IN COMPUTING REQUIRED FURNISHED EXCAVATION. THE EXCESS WILL BE CONSIDERED WASTE.

EARTHWORK NOTES:
A MASS DIAGRAM FOR THE EARTHWORK IS NOT INCLUDED IN THESE PLANS AND WILL NOT BE AVAILABLE TO THE CONTRACTOR. THE EARTHWORK SCHEDULE HAS BEEN INCLUDED IN THESE PLANS TO TAKE THE PLACE OF THE NEED FOR A MASS DIAGRAM. THE SCHEDULE GIVES QUANTITIES IN "COLUMN 5" FOR EXCESS EXCAVATION OR BORROW REQUIRED IN EACH SPECIFIED AREA ALONG THE LIMITS OF THE PROJECT. IT SHALL BE THE RESPONSIBILITY OF THE CONTRACTOR TO DETERMINE THE REQUIRED HAUL DISTANCES AND QUANTITIES FROM THE INFORMATION GIVEN.

THE QUANTITIES SHOWN IN THE SCHEDULE INCLUDES ALL MAINLINE, SIDEROAD, AND ENTRANCE QUANTITIES IN EACH SPECIFIED AREA.

A SHRINKAGE OF 18% WAS USED TO DETERMINE THE EXCESS AND BORROW QUANTITIES.
SHRINKAGE FACTOR = 1.00/(1.00-0.18) = 1.0/0.82 = 1.22

COLUMN 3 = COLUMN 2 X 1.22 (SHRINKAGE FACTOR)
COLUMN 4 = COLUMN 1 - COLUMN 3
COLUMN 6 = COLUMN 2 - (COLUMN 1 * 0.82)

PAY ITEM SUMMARY	CHANNEL EXCAVATION (CY)	EARTH EXCAVATION (CY)	FURNISHED EXCAVATION (CY)
MASON COUNTY	4,991	44,560	88,602
CASS COUNTY	14,566	39,963	74,441
TOTAL	19,557	84,523	163,042

EARTHWORK QUANTITIES:
CHANNEL EXCAVATION = COLUMN 1 (IN N. BANK & IN S. BANK ONLY) = 19,557 CY
EARTH EXCAVATION = COLUMN 1- CHANNEL EXCAVATION = 84,523 CY
FURNISHED EXCAVATION = COLUMN 6 = 163,042 CY

SLOPEWALL REMOVAL SCHEDULE	
APPROX. LOCATION	SLOPEWALL TO BE REMOVED
	SQ YD
LT STA 898+00 to STA 904+00	800
SUBTOTAL MASON COUNTY	*800*
LT STA 917+20 TO STA 929+90	1693
RT STA 917+20 TO STA 930+00	1707
SUBTOTAL CASS COUNTY	*3400*
TOTAL	**4200**

TRENCH BACKFILL SCHEDULE		
APPROX. LOCATION	PIPE DIAMETER	TRENCH BACKFILL
	IN	CU YD
IL 78		
884+50	15	8.11
892+00	15	8.11
SUBTOTAL MASON COUNTY		*16.22*
927+00	15	8.11
939+00	15	8.11
SUBTOTAL CASS COUNTY		*16.22*
SUBTOTAL IL 78		**32.44**
898+60	15	8.11
899+00	15	8.11
902+00	15	8.11
SUBTOTAL - BOAT RAMP ACCESS		**24.33**
TOTAL		**57**

BRIDGE APPROACH PAVEMENT SCHEDULE		
LOCATION STA TO STA	WIDTH	BR APPR PVT
	FT	SQ. YD
STA 864+06.50 TO STA 864+36.5	36	120
STA 903+86.55 TO STA 904+16.88	36	120
SUBTOTAL MASON COUNTY		240
STA 922+35.45 TO STA 922+65.45	36	120
SUBTOTAL CASS COUNTY		120
TOTAL		**360**

BRIDGE APPROACH PAVEMENT (SPECIAL) SCHEDULE		
LOCATION STA TO STA	WIDTH	BR APPR PVT (SPECIAL)
	FT	SQ. YD
STA 860+46.00 TO STA 860+76.00	36	120
SUBTOTAL MASON COUNTY		120
TOTAL		**120**

PIPE DRAIN SCHEDULE			
LOCATION (STATION)	OFFSET	12" CORRUGATED STEEL	12" METAL END SECTION
		FT	EACH
922+70	Varies Rt.	11	1
TOTALS		**11**	**1**

ESTIMATED QUANTITIES FOR FIELD TILE REPLACEMENT			
APPROX. LOCATION	EXPLORATION TRENCH, 52" DEPTH	PIPE DRAINS	MISCELLANEOUS CONCRETE
	FOOT	FOOT	CU YD
SUBTOTAL MASON COUNTY	600.00	600	25
SUBTOTAL CASS COUNTY	600.00	600	25
TOTAL	**1200**	**1200**	**50**

BRIDGE APPROACH PAVEMENT CONNECTOR (FLEXIBLE) SCHEDULE		
LOCATION STA TO STA	WIDTH	BR APPR PVT CONN (FLEX)
	FT	SQ. YD
STA 864+36.50 TO STA 864+42.50	36	24
SUBTOTAL MASON COUNTY		24
TOTAL		**24**

TEMPORARY CONCRETE BARRIER SCHEDULE		
LOCATION	TEMP CONC BARRIER	TEMP CONC BARRIER, RELOCATE
	FT	FT
STAGE I WOLF LAKE		
STA 858+00 T0 STA 866+00	800	
STAGE II WOLF LAKE		
STA 858+00 TO STA 866+00		800
STAGE II BIG LAKE OVERFLOW		
STA 929+01.5 TO STA 936+89.0	787.5	
TOTALS	**1587.5**	**800**

D-96-506-07

FILE NAME = c:\pw_work\PWIDOT\LAUGHLINRL\d0134498\sht Sched.dgn
USER NAME = laughlinrl
PLOT SCALE = 100.0000 ' / IN.
PLOT DATE = Mar-31-2009 07:48:16AM
DESIGNED -
DRAWN -
CHECKED -
DATE -
REVISED -
REVISED -
REVISED -
REVISED -

STATE OF ILLINOIS
DEPARTMENT OF TRANSPORTATION

SCHEDULE OF QUANTITIES

SCALE: | SHEET NO. 1 OF 5 SHEETS | STA. | TO STA.

F.A.P RTE.	SECTION	COUNTY	TOTAL SHEETS	SHEET NO.
614	144(B-1, B-2)	CASS, MASON	351	8
		CONTRACT NO. 72A76		

FED. ROAD DIST. NO. | ILLINOIS | FED. AID PROJECT

SEEDING SCHEDULE										
LOCATION	SEEDING CLASS 2	NITROGEN FERTILIZER NUTRIENT	PHOSPHOROUS FERTILIZER NUTRIENT	POTASSIUM FERTILIZER NUTRIENT	AGRICULTURAL GROUND LIMESTONE	MULCH METHOD 2	SEEDING CLASS 7	MOWING	TEMPORARY EROSION CONTROL SEEDING	TOPSOIL FURNISH AND PLACE, 4"
	ACRE	LB	LB	LB	TON	ACRE	ACRE	ACRE	LB	SQ YD
STA 854+00 TO STA 871+00	3.868	348.120	348.120	348.120	7.736	3.868	3.868	3.868	1547	18721.12
STA 871+00 TO STA 882+00	4.357	392.130	392.130	392.130	8.714	4.357	4.357	4.357	1743	21087.88
STA 882+00 TO STA 898+38	4.943	444.870	444.870	444.870	9.886	4.943	4.943	4.943	1977	23924.12
STA 898+38 TO STA 907+00	3.261	293.490	293.490	293.490	6.522	3.261	3.261	3.261	1304	15783.24
SUBTOTAL MASON COUNTY	*16.500*	*1478.750*	*1478.750*	*1478.750*	*32.9*	*16.500*	*16.500*	*16.500*	*6571.600*	*79516*
STA 907+00 TO STA 909+00	0.722	64.980	64.980	64.980	1.444	0.722	0.722	0.722	289	3494.48
STA 909+00 TO STA 932+00	4.428	398.520	398.520	398.520	8.856	4.4280	4.428	4.428	1771	21431.52
STA 932+00 TO STA 944+00	3.345	301.050	301.050	301.050	6.690	3.3450	3.345	3.345	1338	16189.8
STA 944+00 TO STA 955+00	2.245	202.050	202.050	202.050	4.490	2.2450	2.245	2.245	898	10865.8
SUBTOTAL CASS COUNTY	*10.750*	*966.750*	*966.750*	*966.750*	*21.5*	*10.750*	*10.750*	*10.750*	*4296.000*	*51982*
TOTALS	**27.25**	**2445.50**	**2445.50**	**2445.50**	**54.4**	**27.25**	**27.25**	**27.25**	**10868**	**131498**

IMPACT ATTENUATORS, TEMPORARY (FULLY REDIRECTIVE, NARROW), TEST LEVEL 3		
LOCATION	IMPACT ATTENUATOR	IMPACT ATTENUATOR, RELOCATE
	EACH	EACH
STAGE I WOLF LAKE		
STA 858+00	1	
STA 866+00	1	
STAGE II WOLF LAKE		
STA 858+00		1
STA 866+00		1
STAGE II BIG LAKE OVERFLOW		
STA 929+01.50	1	
STA 936+89.00	1	
TOTALS	**4**	**2**

CULVERT REMOVAL SCHEDULE				
STATION	OFFSET	TYPE	SIZE (IN)	LENGTH (FT)
869+20	78' Rt.	4'x4' RC Box Culvert		28
885+00	138' Lt.	CMP	36"	49
885+00	146' Lt.	CMP	18"	41
885+00	42' Rt.	CMP	24"	40
SUBTOTAL MASON COUNTY				*158*
920+95	Varies Rt.	CMP	24"	48
934+50	90' Lt.	CMP	36"	30
SUBTOTAL CASS COUNTY				*78*
TOTAL				**236**

ROCKFILL-SPECIAL	
LOCATION	ROCKFILL - SPECIAL
	TON
STAGE I STA 859+00 TO STA 868+00	8796.1
STAGE II STA 859+00 TO STA 864+00	1942.9
SUBTOTAL MASON COUNTY	*10739.0*
TOTAL	**10739**

TREE REMOVAL SCHEDULE	
LOCATION	TREE REMOVAL
	ACRE
STA 898+38 TO STA 902+00	3.04
STA 902+00 TO STA 907+00	4.00
SUBTOTAL MASON COUNTY	*7.0*
STA 907+00 TO STA 911+00, STA 912+15 TO STA 914+30	5.45
STA 920+30 TO STA 920+80, STA 930+50 TO STA 932+00	1.31
STA 932+00 TO STA 934+60, STA 936+50 TO STA 937+50, STA 938+0 TO STA 940+70	5.05
SUBTOTAL CASS COUNTY	*11.8*
TOTAL	**18.9**

PAVEMENT PATCHING SCHEDULE			
APPROX. LOCATION	PAVEMENT PATCHING, TY 2, 12"	PAVEMENT PATCHING, TY 3, 12"	PAVEMENT PATCHING, TY 4, 12"
	SQ YD	SQ YD	SQ YD
WOLF LAKE	312	180	60
STA 884+50	15		
STA 892+00	15		
STA 899+00	15		
STA 902+00	15		
SUBTOTAL MASON COUNTY	*372*	*180*	*60*
STA 927+00	15		
STA 939+00	15		
SUBTOTAL CASS COUNTY	*30*	*0*	*0*
TOTAL	**402**	**180**	**60**

PAVED SHOULDER REMOVAL				
LOCATION	LENGTH CALCULATION	SHOULDER WIDTH LT	SHOUDLER WIDTH RT	PAVED SHLD REM
		FOOT	FOOT	SQ YD
STA 857+00 TO STA 872+00	360	4	4	320.00
STA 872+00 TO STA 887+00	478.96	2		106.44
SUBTOTAL MASON COUNTY				*426.44*
STA 932+00 TO STA 947+00	300	2		66.67
STA 947+00 TO STA 952+70	300	2		66.67
SUBTOTAL CASS COUNTY				*133.33*
TOTAL				**560**

STONE DUMPED RIPRAP SCHEDULE					
STATION	LT/RT	STONE DUMPED RIPRAP, CL A4	STONE DUMPED RIPRAP, CL A4, SP	STONE DUMPED RIPRAP, CL A5	FILTER FABRIC
		TON	TON	TON	SQ YD
859+06 to 861+50	LT		152		303
858+45 to 861+50	RT		127		254
863+70 to 864+45	RT		14		27
884+50	LT	28			55
892+00	LT	48			96
898+56 to 906+64	LT	3416			6832
903+97 to 906+67	RT	1546			3091
SUBTOTAL MASON COUNTY		*5037*	*292*	*0*	*10658*
906+97 to 908+67	RT	560			1120
906+64 to 909+10	LT			1617	2156
908+67 to 910+48	RT			1142	1522
913+00	LT			233	311
913+00	RT			567	756
921+90 to 924+72	RT	422			843
925+29 to 937+50	RT	2389			4777
929+90 to 936+80	LT	2116			4232
940+11 to 941+31	LT	43			85
SUBTOTAL CASS COUNTY		*5529*	*0*	*3559*	*15802*
TOTAL		**10566**	**292**	**3559**	**26460**

GUARDRAIL REMOVAL SCHEDULE	
LOCATION	GUARDRAIL REMOVAL (FOOT)
LT 858+52 to 859+30	78
RT 858+29 to 859+30	101
LT 864+10 to 866+45	235
RT 864+10 to 866+00	190
LT 905+90 to 907+68	178
RT 904+90 to 907+68	278
SUBTOTAL MASON COUNTY	*1060*
LT 917+38 to 920+13	278
RT 917+38 to 919+13	178
LT 928+50 to 929+90	140
RT 927+75 to 929+90	214
LT 936+00 to 938+15	214
RT 936+00 to 937+40	140
SUBTOTAL CASS COUNTY	*1164*
TOTAL	**2224**

GUARDRAIL SCHEDULE						
LOCATION	S.P.B.G.R. TYPE A	TRAFFIC BARRIER TERMINAL TYPE 1 SPECIAL (TANGENT)	TRAFFIC BARRIER TERMINAL TYPE 6	BARRIER WALL MARKERS	GUARDRAIL MARKERS - CRYSTAL	TERMINAL MARKERS DIRECT APPLIED
	FT	EACH	EACH	EACH	EACH	EACH
Lt 857+94.75 to 860+76	187.5	1	1			1
Rt 858+24.75 to 860+76	157.5	1	1			1
SN 063-0500				4		
Lt. 864+06.50 to 867+12.75	212.5	1	1		4	1
Rt. 864+06.50 to 867+12.75	212.5	1	1		4	1
Lt 899+00 to 904+05	412.5	1	1		6	1
Rt 901+50 to 904+27	175	1	1		3	1
SUBTOTAL MASON COUNTY	*1357.5*	*6*	*6*	*4*	*17*	*6*
SN 009-0510				*18*		
Lt 922+28 to 936+00	1275	1	1		17	1
Rt 922+42 to 924+38	100	1	1		3	1
SUBTOTAL CASS COUNTY	*1375.0*	*2*	*2*	*18*	*20*	*2*
TOTALS	**2732.5**	**8**	**8**	**22**	**37**	**8**

TEMPORARY GUARDRAIL SCHEDULE		
LOCATION	TEMPORARY GUARDRAIL	TEMPORARY TERMINAL SECTION, TY-1, SP.
	(FT)	(EACH)
STA 919+20 TO STA 922+45	325	2
TOTALS	**325**	**2**

DRAINAGE SCHEDULE

LOCATION (STATION)	OFFSET	PIPE CULVERTS CS/A T-1 12"	CS/A T-1 15"	CS/A T-1 24"	CS/A T-2 48"	CS/A T-2 60"	TEMP CS/A T-1 15"	METAL END SECTIONS 12"	15"	24"	48"	60"	STORM SEWER 12" RCCP
		FT	FT	FT	FT	FT	FT	EACH	EACH	EACH	EACH	EACH	FT
IL 78													
854+38	27.5' Lt.		42						1				
854+85	Varies Lt.		70						1				
854+96	28' Rt.		96						2				
857+01	Varies Rt.		48						2				
857+13	Varies Lt.		113						2				
857+90	25.6' Rt.		87						2				
858+80	Varies Lt.			74						2			
859+90	Varies Rt.			66						2			
864+25	Varies Lt.	40						1					
864+46.5	Varies Lt.	14											
864+46.5	Varies Rt.	10						1					
869+20	Varies Rt.				96						2		
884+50	Varies Lt.						40						
885+00	78' Rt.				86						2		
892+00	Varies Lt.						40						
898+60			See Boat Ramp Access Road- Mason Co. (below)										
899+00			See Boat Ramp Access Road- Mason Co. (below)										
902+00			See Boat Ramp Access Road- Mason Co. (below)										
903+84	0' Rt.												34
903+89	Varies Rt.	40						1					
SUBTOTAL MASON COUNTY		*104*	*456*	*140*	*182*	*0*	*80*	*3*	*10*	*4*	*4*	*0*	*34*
922+61	0' Rt.												41
925+00	88' Rt.					80						2	
925+00	96.5' Lt.					80						2	
927+00	0' Rt.						40						
939+00	Varies Lt.						40						
SUBTOTAL CASS COUNTY		*0*	*0*	*0*	*0*	*160*	*80*	*0*	*0*	*0*	*0*	*4*	*41*
SUBTOTALS - IL 78		**104**	**456**	**140**	**182**	**160**	**160**	**3**	**10**	**4**	**4**	**4**	**75**
BOAT RAMP ACCESS ROADS - MASON CO.													
898+60 (1+45)	Varies Lt.		45						2				
899+00 (1+85)	Varies Lt.						44						
902+00 (4+85)	Varies Lt.						40						
SUBTOTALS - BOAT RAMP ACCESS		**0**	**45**	**0**	**0**	**0**	**84**	**0**	**2**	**0**	**0**	**0**	**0**
TOTALS		**104**	**501**	**140**	**182**	**160**	**244**	**3**	**12**	**4**	**4**	**4**	**75**

ESTIMATED QUANTITIES FOR GEOTECHNICAL WORK

THE FOLLOWING ARE ESTIMATED QUANTITIES FOR CORRECTING GEOTECHNICAL PROBLEMS. THESE QUANTITIES MAY BE REDUCED, INCREASED, OR DELETED BY THE ENGINEER BASED ON ACTUAL FIELD CONDITIONS. NO WORK INVOLVING THESE QUANTITIES SHALL BE PERFORMED WITHOUT APPROVAL AND DIRECTION OF THE ENGINEER.

THE FOLLOWING ARE ESTIMATED QUANTITIES FOR GROUND IMPROVEMENT PRIOR TO PLACING CONCRETE BOX CULVERTS.

Pay Item	LOCATION	QUANTITY
ROCKFILL - FOUNDATION	STA 935+35	300 Tons

THE FOLLOWING ARE ESTIMATED QUANTITIES FOR GROUND IMPROVEMENT PRIOR TO PLACING EMBANKMENT.

PAY ITEM	APPROXIMATE LOCATION	QUANTITY
TEMPORARY DITCH*	Various: 869+40 to 897+30	1,600 cubic yards
PUMPING	Various: 869+40 to 897+30	1 month
REMOVAL AND DISPOSAL OF UNSUITABLE MATERIAL	859+50 to 861+25	3,500 cubic yards
	Various: 869+40 to 897+30	4,000 cubic yards
	934+80 to 936+80	1,800 cubic yards
GROUND STABILIZATION GEOSYNTHETIC	931+00 to 936+00	9,000 square yards
ROCKFILL - EMBANKMENT	931+00 to 936+00	11,200 Tons
	Various: 869+40 to 897+30	8,000 Tons
ROCKFILL-SPECIAL**	859+50 to 861+25	6,600 Tons

THE FOLLOWING ARE ESTIMATED QUANTITIES FOR PROTECTING THE CHANDLERVILLE LEVEE.

PAY ITEM	APPROXIMATE LOCATION	QUANTITY
TEMPORARY SHEET PILING	935+75 to 936+00	2196 SQ FT

* Earth Excavation required for Temporary Ditch Construction in Area 1.
** Rockfill-Special required to replace any removal and disposal of unsuitable material.

DRAINAGE STRUCTURE SCHEDULE

LOCATION (STATION)	OFFSET	INLET T-A W/ T-8G	TEMP INLET T-A W/ T-8G	INLET T-C STD 609006	4' MANHOLE, TY A w/ TY 1 FR & CL
		EACH	EACH	EACH	EACH
854+55	27.5' Lt.	1			
864+46.5	29.3' Lt				1
864+46.5	15' Lt			1	
864+46.5	15' Rt			1	
899+00	29' Lt.		1		
902+00	29' Lt.		1		
903+84	15' Lt			1	
904+02	15' Rt			1	
SUBTOTAL MASON COUNTY		*1*	*2*	*4*	*1*
922+52	15' Lt			1	
922+70	15' Rt			1	
927+00	28' Lt		1		
939+00	28' Lt		1		
SUBTOTAL CASS COUNTY		*0*	*2*	*2*	*0*
TOTALS		**1**	**4**	**6**	**1**

PERMANENT EROSION CONTROL

APPROX. LOCATION	AGGREGATE (EROSION CONTROL)	EARTH EX FOR EROSION CONTROL
	TON	CU YD
STA 855+71, 28' LT.	4.3	3.56
STA 855+86, 29' RT	4.3	3.56
STA 859+47, 60' RT	11.9	
STA 860+76, 83' RT	11.9	
STA 861+14, 84' RT	11.9	
STA 864+20, 250' LT	4.3	3.56
STA 864+38, 76' RT	11.9	
STA 864+56, 77' RT	4.3	3.56
STA 864+81, 157' RT	4.3	3.56
STA 865+73, 78' RT	4.3	3.56
STA 869+98, 89' LT	4.3	3.56
STA 870+09, 74' RT	4.3	3.56
STA 885+64, 79' RT	4.3	3.56
STA 885+64, 120' LT	4.3	3.56
STA 902+97, 61' LT	11.9	
STA 903+53, 69' LT	11.9	
STA 906+05, 113' RT	11.9	
STA 906+91, 196' LT	11.9	
SUBTOTAL MASON COUNTY	*138.2*	*35.56*
STA 907+18, 196' LT	11.9	
STA 907+43, 196' LT	11.9	
STA 924+32, 87' RT	11.9	
STA 934+43, 91' LT	11.9	
STA 934+49, 61' RT	11.9	
STA 935+30, 120' RT	11.9	
STA 937+33, 110'LT	4.3	3.56
STA 939+00, 52' RT	4.3	3.56
STA 946+30, 54' RT	4.3	3.56
SUBTOTAL CASS COUNTY	*84.3*	*10.67*
TOTAL	**222.5**	**46**

HEAVY DUTY EXCELSIOR BLANKET

LOCATION	TOTAL
MASON COUNTY	150
CASS COUNTY	100
TOTAL	**250**

SIGNING SCHEDULE

LOCATION	SIGN MESSAGE	SIGN PANEL T-1	TELESCOPING STEEL SIGN SUPPORT
		SQ FT	FOOT
RT STA 874+00	S-CURVE AHEAD SIGN (W1-5)	9.0	24.0
BOAT RAMP PARKING AREA	HANDICAPPED PARKING SIGNS (R7-8)	2.25	36.0
BOAT RAMP ACCESS STA 0+45	STOP SIGN (R1-1)	9.0	24.0
BOAT RAMP ACCESS STA 0+45	CROSS TRAFFIC DOES NOT STOP (2C-50)	6.0	24.0
SUBTOTAL MASON COUNTY		*26.3*	*108.0*
LT STA 952+00	S-CURVE AHEAD SIGN (W1-5)	9.0	24.0
SUBTOTAL CASS COUNTY		*9.0*	*24.0*
TOTAL		**35**	**132**

RESURFACING SCHEDULE (BOAT RAMP ACCESS ROAD PAVEMENT)

LOCATION STATION TO STATION		SUB-BASE GRANULAR MATERIAL, TY. B, 5"	AGG. SURF. COURSE, TY. A, 3"	BIT MATL PRIME COAT	BIT MATL COVER & SEAL COATS (2 APPS TTL)	COVER AND SEAL COAT AGG (2 APPS TTL)	HMA BINDER COURSE, IL 19.0, N50	HMA SURFACE COURSE, MIX "C", N50
		TON	TON	TON	TON	TON	TON	TON
0+12	0+54	64.83	38.09				30.70	18.24
0+54	1+40	77.70	45.55				36.65	21.75
1+40	1+65	13.89	8.01				6.39	3.76
1+65	2+38	92.45	54.44	0.46	0.93	6.49	0	0
2+38	2+60.5	34.31	20.00	0.17	0.34	2.41	0	0
2+60.5	4+76	230.71	132.97	1.15	2.31	16.21	0	0
4+76	4+98.5	34.31	20.00	0.17	0.34	2.41	0	0
4+98.5	5+71	91.48	54.28	0.46	0.92	6.43	0	0
5+71	7+01	69.53	40.10	0.35	0.70	4.88	0	0
7+01	8+54	359.23	213.57	1.80	3.60	25.23	0	0
8+54	10+21.5	601.50	358.67	3.01	6.02	42.25	0	0
TOTALS		**1670**	**986**	**7.6**	**15**	**106**	**74**	**44**

TEMPORARY EROSION CONTROL - ESTIMATED QUANTITIES SCHEDULE

ITEMS	UNIT	MASON COUNTY	CASS COUNTY	TOTAL
INLET AND PIPE PROTECTION	EACH	5	5	10
PERIMETER EROSION BARRIER	FT	6259.9	5505	11765

Rev.

FILE NAME = c:\pw_work\PWIDOT\LAUCHLINRL\d0134498\sheetSched.dgn
USER NAME = laughlinrl
PLOT SCALE = 100.0000 ' / IN.
PLOT DATE = Mar-31-2009 07:48:36AM

DESIGNED - | REVISED -
DRAWN - | REVISED -
CHECKED - | REVISED -
DATE - | REVISED -

STATE OF ILLINOIS
DEPARTMENT OF TRANSPORTATION

SCHEDULE OF QUANTITIES

SCALE: | SHEET NO. 3 OF 5 SHEETS | STA. | TO STA.

F.A.P RTE.	SECTION	COUNTY	TOTAL SHEETS	SHEET NO.
614	144(B-1, B-2)	CASS, MASON	351	10
		CONTRACT NO. 72A76		

FED. ROAD DIST. NO. | ILLINOIS | FED. AID PROJECT

FURNISHING ROW MARKER SCHEDULE

LOCATION (STATION)	OFFSET	FURNISHING ROW MARKER
		(EACH)
858+00	40' LT	1
858+25	40' RT	1
859+00	65' RT	1
860+00	130' LT	1
862+00	130' RT	1
870+00	130' LT	1
870+99.99	130' RT	1
870+99.99	150' LT	1
876+26.29	150' LT	1
876+26.29	130' RT	1
881+26.26	170' LT	1
881+26.26	110' RT	1
886+52.56	170' LT	1
886+52.56	110' RT	1
895+00	110' RT	1
897+00	150' RT	1
898+00	170' LT	1
900+00	220' LT	1
906+00	270' LT	1
SUBTOTAL MASON COUNTY		*19*
909+00	150' RT	1
910+00	340' RT	1
912+00	270' LT	1
913+50	170' LT	1
915+00	340' RT	1
916+00	100' RT	1
919+00	100' RT	1
920+00	190' RT	1
926+00	190' RT	1
927+00	120' RT	1
934+00	120' RT	1
935+00	140' RT	1
936+00	170' LT	1
936+24.34	104.90' LT	1
936+24.34	140' RT	1
936+80	104.90' LT	1
937+00	140' LT	1
939+00	140' RT	1
940+00	80' RT	1
942+35.21	140' LT	1
942+35.21	80' RT	1
944+00	120' LT	1
949+00	100' LT	1
950+07.56	70' LT	1
950+07.56	80' RT	1
952+00	80' RT	1
952+50	40' RT	1
953+00	70' LT	1
954+00	40' LT	1
SUBTOTAL CASS COUNTY		*29*
TOTALS		**48**

SHORT TERM PAVEMENT MARKING SCHEDULE

LOCATION STATION TO STATION	LENGTH FT	SHORT TERM (3 APPS) FT
SHORT-TERM STA 767+80 TO STA 813+19.00 BK	4539	1361.7
SHORT-TERM STA 810+00 AH TO STA 854+00	4400	1320
4" SKIP-DASH CENTERLINE STA 856+10 TO STA 907+00	5090	1527
SHORT-TERM EDGE LINES STA 856+10 TO STA 953+00	5090	1221.6
SUBTOTAL MASON COUNTY		*5430.3*
4" SKIP-DASH CENTERLINE STA 907+00 TO STA 953+00	4600	1380
SHORT-TERM EDGE LINES STA 907+00 TO STA 953+00	4600	1104
SUBTOTAL CASS COUNTY		*2484*
TOTAL		**7914**

RAISED REFLECTIVE PAVEMENT MARKER SCHEDULE

LOCATION (STATION TO STATION)	LENGTH	R.R.P.M. CRYSTAL	R.R.P.M. REMOVAL
	FT	EACH	EACH
STA 767+80 TO STA 813+19.00 BK	4539	57	57
STA 810+00.00 AH TO STA 854+00	4400	55	55
STA 854+00 TO STA 857+00	300	4	4
STA 857+00 TO STA 872+00	1500	19	19
STA 872+00 TO STA 887+00	1500	19	19
STA 887+00 TO STA 902+00	1500	19	19
STA 902+00 TO STA 907+00	500	6	6
SUBTOTAL MASON COUNTY		*179*	*179*
STA 907+00 TO STA 917+00	1000	13	13
STA 917+00 TO STA 932+00	1500	19	19
STA 932+00 TO STA 947+00	1500	19	19
STA 947+00 TO STA 953+00	600	8	8
SUBTOTAL CASS COUNTY		*59*	*59*
TOTAL		**238**	**238**

BOAT RAMP CONCRETE SCHEDULE

LOCATION	PVT FABRIC	PCC PVT, 8"
	SQ YD	SQ YD
BOAT RAMP #1	237.0	237.0
BOAT RAMP #2	231.9	231.9
TOTAL	**469**	**469**

PAVEMENT MARKING REMOVAL SCHEDULE

LOCATION	LENGTH	REMOVAL
STATION TO STATION	FT	SQ FT
CENTERLINES (5") STA 854+00 TO STA 907+00	5300	552.08
EDGE LINES (5") STA 854+00 TO STA 907+00	5300	4416.67
SUBTOTAL MASON COUNTY		*4968.75*
CENTERLINES (5") STA 907+00 TO STA 953+00	4600	479.17
EDGE LINES (5") STA 907+00 TO STA 953+00	4600	3833.33
SUBTOTAL CASS COUNTY		*4312.50*
TOTAL		**9281**

PAVEMENT MARKING SCHEDULE

LOCATION (STATION TO STATION)	LENGTH	5" PAINT YELLOW LN SOLID	12" PAINT YELLOW LN SOLID CHEVRON	PAINT LTRS & SYMBOLS	5" URETHANE YELLOW LN SKIP-DASH	5" URETHANE WHITE LN SOLID	5" URETHANE YELLOW LN SOLID	24" URETHANE WHITE LN SOLID	5" TEMP PVT MARKING LN
	FT	FT	FT	SQ FT	FT	FT	FT	FT	FT
STA 767+80 TO STA 813+19 BK	4539				1135	9078	1072		11285
STA 810+00 AH TO STA 854+00	4400				1100	8800	449		10349
STA 854+00 TO STA 857+00	300				75	600			675
STA 857+00 TO STA 872+00	1500				375	3000			3375
STA 872+00 TO STA 887+00	1500				375	3000			3375
STA 887+00 TO STA 902+00	1500				375	3000			3375
STA 902+00 TO STA 907+00	500				125	1000			1125
BOAT RAMP PARKING AREA		722	420	4.6					
BOAT RAMP STA 0+27.00								30	
SUBTOTAL MASON COUNTY		*722*	*420*	*4.6*	*3560*	*28478*	*1521*	*30*	*33559*
STA 907+00 TO STA 917+00	1000				250	2000			2250
STA 917+00 TO STA 932+00	1500				375	3000			3375
STA 932+00 TO STA 947+00	1500				375	3000			3375
STA 947+00 TO STA 953+00	600				150	1200			1350
SUBTOTAL CASS COUNTY					*1150*	*9200*	*0*		*10350*
TOTAL		**722**	**420**	**5**	**43909**			**30**	**43909**

APPROACH SLAB REMOVAL SCHEDULE

APPROX. STATION	WIDTH	APPROXIMATE LOCATION	APPROACH SLAB REMOVAL
	FT		SQ. YD
859+00	34	EX SN 063-0007	113.33
865+00	34	EX SN 063-0007	113.33
903+85	34	EX SN 009-0005	113.33
SUBTOTAL MASON COUNTY			*340.00*
917+50	34	EX SN 009-0005	113.33
929+90	34	EX SN 009-0006	113.33
936+00	34	EX SN 009-0006	113.33
SUBTOTAL CASS COUNTY			*340.00*
TOTAL			**680**

PPP ENTRANCE IMPROVEMENT SCHEDULE (STA 767+80 TO STA 854+00)

TYPE	WIDTH (FT)	LENGTH (FT)	AGG. SURF. CSE. TYPE B TON	INC. BIT. SURFACING TON	BIT. SURF. REMOVAL - BUTT JOINT SQ YD
SIDE ROAD	55	9		6.70	64.00
SIDE ROAD	55	9		6.70	64.00
PRIVATE ENT.	24	14	3.1	6.9	
M.B. TURNOUT		7		3.80	
PRIVATE ENT.		14	3.1	6.9	
PRIVATE ENT.		14	3.1	6.9	
COM. ENTRANCE		14	2.1	24.2	
M.B. TURNOUT		9		12.7	
COM. ENTRANCE		14	2.1	24.2	
TOTAL			**14**	**99**	**128**

ENTRANCE IMPROVEMENT SCHEDULE

LOCATION	TYPE OF ENTRANCE	EX MATERIAL TYPE	WIDTH	RT OFFSET	MB REM & RELOCATE	LENGTH (FROM EOP/HMA SHLD TO LIMITS OF IMPROVEMENT)	PR HMA CONC. THICKNESS	HMA SURF REM - BUTT JOINT	PREP OF BASE	AGG BASE REPAIR	AGG SURF COURSE, TY-B	BIT. MAT'L PR. CT.	AGG. PR. CT.	INCIDENTAL HMA SURF.
(LT/RT) / (STATION)	(FE/CE/PE/MB)	EARTH/AGG/ HMA/PCC	FOOT	FOOT	EACH	FOOT	INCH	SQ YD	SQ YD	TON	TON	TON	TON	TON
LT STA 854+38	PE	AGG	24			22	3.5		28.44	1.21	34.69			5.58
LT STA 854+85	PE/MB LEAD	HMA	16	30	1	22	3.5	117.00			39.97	0.044	0.234	22.93
RT STA 854+96	CE	HMA	24			22	8	70.67				0.027	0.141	31.66
RT STA 857+01	CE	HMA	26			22	8	67.49				0.026	0.135	30.24
LT STA 857+13	PE/MB LEAD	HMA	16	60		22	3.5	66.53			22.73	0.025	0.133	13.04
RT STA 857+90	CE	HMA	35			22	8	87.92				0.033	0.176	39.39
RT STA 869+20	FE	AGG	24			112			28.44	1.21	104.84			
LT STA 869+32	FE	AGG	24			112			28.44	1.21	111.76			
LT STA 885+00	FE	AGG	24			152			28.44	1.21	147.52			
RT STA 885+00	FE	AGG	24			95			28.44	1.21	88.19			
LT STA 897+98	FE	AGG	20			65			24.89	1.06	45.49			
LT STA 897+98	FE	AGG	16			65			21.33	0.91	43.03			
LT STA 897+98	FE	AGG	16			65			21.33	0.91	44.35			
RT STA 898+10	FE	AGG	16			132			21.33	0.91	82.11			
LT STA 902+10 - STA 908+00	TEMP ACCESS	AGG	VAR						0.00	0.00	842.38			
SUBTOTAL MASON COUNTY					*1*			*409.61*	*231.11*	*9.85*	*1607.07*	*0.16*	*0.82*	*142.83*
LT STA 908+00 TO RT STA 908+50	TEMP ACCESS	AGG	VAR						0.00	0.00	65.40			
RT STA 921+00	TEMP ACCESS	AGG	VAR						0.00	0.00	55.09			
RT STA 925+00	FE	AGG	24			172			28.44	1.21	160.31			
LT STA 925+00	FE	AGG	24			172			28.44	1.21	160.31			
LT STA 936+37	FE	AGG	16			86.9			21.33	0.91	53.26			
LT STA 936+37 - STA 938+70	TEMP ACCESS	AGG	VAR						0.00	0.00	163.04			
RT STA 937+80	TEMP ACCESS	AGG	VAR						0.00	0.00	102.73			
RT STA 937+86	FE	AGG	16			100			21.33	0.91	57.72			
LT STA 949+72	CE	HMA	24			50	8	512.35				0.195	1.025	229.53
SUBTOTAL CASS COUNTY					*0*			*512.35*	*99.56*	*4.25*	*697.37*	*0.195*	*1.025*	*229.53*
TOTAL					**1**			**922**	**331**	**14**	**2304**	**0.4**	**1.8**	**372**

RESURFACING SCHEDULE (MAINLINE PAVEMENT)

LOCATION STATION TO STATION	HMA SURF REM, BUTT JOINT	HMA SURF REM, VD	BIT (PRIME COAT)	AGG (PRIME COAT)	LVL BINDER MM N50	BND CSE, IL-19.0, N50, VD	HMA SURF CSE, MIX C, N50 1-1/2"
	SQ YD	SQ YD	TON	TON	TON	TON	TON
STA 767+80 TO STA 768+10	73.3		0.03	0.15			6.2
STA 768+10 TO STA 813+19 BK		11022.03	4.19	22.04	466		925.81
STA 810+00 AH TO STA 854+00		10755.56	4.09	21.51	451.73		903.47
STA 854+00 TO STA 857+00		733.3	0.28	1.47	31.10		61.60
STA 857+00 TO STA 859+00		488.9	0.19	0.98	20.7		41.10
STA 859+00 TO STA 860+ 76					18.21		36.14
864+06.50 TO STA 872+00		1866.3	0.71	3.73		803	162.86
STA 872+00 TO STA 879+00		1604.7	0.61	3.21		1105.70	145.6
SUBTOTAL FROM ENTRANCES	538.0		0.20	0.80			
SUBTOTAL FROM BOAT RAMP ACCESS ROAD			7.6			74.00	44
SUBTOTAL MASON COUNTY	*611.3*	*26470.8*	*17.9*	*53.9*	*987.7*	*1982.2*	*2326.8*
STA 932+00 TO STA 947+00		666.7	0.25	1.33		744.10	67.2
STA 947+00 TO STA 952+70		1326.7	0.50	2.65	41.25	181.80	127.4
STA 952+70 TO STA 953+00	73.3		0.03	0.15			6.2
SUBTOTAL FROM ENTRANCES	512.0		0.20	1.00			
SUBTOTAL CASS COUNTY	*585.3*	*1993.4*	*1.0*	*5.1*	*41.3*	*925.9*	*200.8*
TOTALS	**1197**	**28464**	**19**	**59**	**1029**	**2908**	**2528**

HMA BASE COURSE/WIDENING 12"

LOCATION STATION TO STATION	SUB-BASE GRAN MATERIAL, TY A 12"	HMA BASE COURSE, 12"	HMA BASE COURSE WIDENING, 12"
	SQ YD	SQ YD	SQ YD
STA 857+00 TO STA 872+00	2678.7	989	418
STA 872+00 TO STA 887+00	0	720	179
SUBTOTAL MASON COUNTY	*2678.7*	*1709*	*597*
STA 932+00 TO STA 947+00	0	710	0
STA 947+00 TO STA 952+70	0	233	44
SUBTOTAL CASS COUNTY	*0*	*943*	*44*
TOTALS	**2679**	**2652**	**641**

HMA SHOULDER SCHEDULE

LOCATION (STATION TO STATION)	HMA SHOULDER 6"	HMA SHOULDER 8"	HMA SHOULDER, VAR. DEPTH
	SQ YD	SQ YD	TON
STA 767+80 TO STA 813+19 BK		4034.7	
STA 810+00 AH TO STA 854+00		3911.1	
STA 854+00 TO STA 854+30	0	14.8	0
STA 854+30 TO STA 857+00	0	389.6	0
STA 857+00 TO STA 872+00	124.4	265.0	149.1
STA 872+00 TO STA 887+00	300.0	533.3	75.8
STA 887+00 TO STA 902+00	0	1383.4	0
STA 902+00 TO STA 907+00	0	248.0	0
SUBTOTAL MASON COUNTY	*424.4*	*10779.9*	*224.9*
STA 917+00 TO STA 932+00	0	1245.3	0
STA 932+00 TO STA 947+00	100.0	1550.0	25.3
STA 947+00 TO STA 952+70	83.3	0	21.1
STA 952+70 TO STA 953+00	0	0	0
SUBTOTAL CASS COUNTY	*183.3*	*2795.3*	*46.4*
TOTAL	**608**	**13575**	**271**

CONCRETE SHOULDER CURB SCHEDULE

LOCATION (STATION TO STATION)	CONCRETE SHOULDER CURB (5")
	FT
STA 864+36.50 TO STA 864+51.50	15
STA 903+78 TO STA 903+88	10
SUBTOTAL MASON COUNTY	*25*
STA 922+66 TO STA 922+76	10
SUBTOTAL CASS COUNTY	*10*
TOTAL	**35**

WORK ZONE PAVEMENT MARKING REMOVAL SCHEDULE

LOCATION STATION TO STATION	LENGTH (FT)	REMOVAL (SQ FT)
SHORT-TERM STA 767+80 TO STA 813+19 AH	4539	150
SHORT-TERM STA 810+00 AH TO STA 854+00	4400	145
SHORT-TERM EDGE LINES STA 856+10 TO STA 907+00 PRIOR TO SURF CSE	5090	135.73
SHORT-TERM SKIP-DASH STA 856+10 TO STA 907+00 PRIOR TO SURF CSE	5090	169.67
SUBTOTAL MASON COUNTY		*600.40*
SHORT-TERM EDGE LINES STA 907+00 TO STA 953+00 PRIOR TO SURF CSE	4600	122.67
SHORT-TERM SKIP-DASH STA 907+00 TO STA 953+00 PRIOR TO SURF CSE	4600	153.33
SUBTOTAL CASS COUNTY		*276.00*
TOTAL		**876**

LIME MODIFIED SOILS SCHEDULE

STATION TO STATION LOCATION	PROCESSING MODIFIED SOIL, 12"	LIME
	SQ YD	TON
STA 857+00 TO STA 872+00	77.80	1.56
STA 872+00 TO STA 887+00	4351.50	87.03
STA 887+00 TO STA 902+00	6061.10	121.22
STA 902+00 TO STA 907+00	804.10	16.08
SUBTOTAL MASON COUNTY	*11294.50*	*225.9*
STA 907+00 TO STA 917+00	0	0
STA 917+00 TO STA 932+00	4305.90	86.12
STA 932+00 TO STA 947+00	6163.90	123.28
STA 947+00 TO STA 952+70	413.30	8.27
SUBTOTAL CASS COUNTY	*10883.10*	*217.7*
TOTALS	**22178**	**443.6**

SUB-BASE GRANULAR MATERIAL, TYPE C SCHEDULE

LOCATION (STATION TO STATION)	SUB-BASE WIDTH	SUB-BASE GRAN MTL TY C, VAR DEPTH
	FT	TON
STA 854+00 TO STA 854+30	0	0.00
STA 854+30 TO STA 857+00	0	0.00
STA 857+00 TO STA 872+00	5.2	19.70
STA 872+00 TO STA 887+00	Varies	389.60
STA 887+00 TO STA 902+00	Varies	573.30
STA 902+00 TO STA 907+00	6.2 ave	87.60
SUBTOTAL MASON COUNTY		*1070.20*
STA 917+00 TO STA 932+00	7.2 ave	510.60
STA 932+00 TO STA 947+00	Varies	665.90
STA 947+00 TO STA 952+70	Varies	30.00
STA 952+70 TO STA 953+00	0	0.00
SUBTOTAL CASS COUNTY		*1206.50*
TOTAL		**2277**

ACCESS GATE, DOUBLE 30' SCHEDULE

APPROX. LOCATION	ACCESS GATE, DBL 30'
	EACH
STA 6+00 BOAT RAMP ACCESS	1
TOTAL	**1**

AGGREGATE SHOULDER SCHEDULE

LOCATION (STATION TO STATION)	AGG SHLD WIDTH	AGG SHLD, TY B, VAR DEPTH
	FT	TON
STA 767+80 TO STA 813+19 BK	3	280.01
STA 810+00 AH TO STA 854+00	3	271.44
STA 854+00 TO STA 854+30	4	3.11
STA 854+30 TO STA 857+00	4	2.99
STA 857+00 TO STA 872+00	4	171.5
STA 872+00 TO STA 887+00	4	227.8
STA 887+00 TO STA 902+00	4	227.8
STA 902+00 TO STA 907+00	4	28.2
SUBTOTAL MASON COUNTY		*1212.85*
STA 917+00 TO STA 932+00	4	141.8
STA 932+00 TO STA 947+00	4	227.8
STA 947+00 TO STA 952+70	4	86.65
STA 952+70 TO STA 953+00	4	4.55
SUBTOTAL CASS COUNTY		*460.8*
TOTAL		**1675**

PAVEMENT REMOVAL SCHEDULE

STATION	PAVEMENT REMOVAL LENGTH	PAVEMENT REMOVAL
	FT	SQ YD
STA 857+00 TO STA 872+00	122	298.22
STA 875+50 TO STA 880+50	500	611.11
STA 880+50 TO STA 887+00	650	1588.89
STA 887+00 TO STA 902+00	1500	3666.67
STA 902+00 TO STA 906+68	468	1144.00
SUBTOTAL MASON COUNTY		*7308.89*
STA 917+40 TO STA 929+90	1250	3055.56
STA 936+00 TO STA 941+50	550	1344.44
STA 941+50 TO STA 948+50	700	855.56
SUBTOTAL CASS COUNTY		*5255.56*
TOTAL		**12564**

HMA FULL DEPTH PAVEMENT SCHEDULE

LOCATION STATION TO STATION	HMA FULL DEPTH PAVEMENT, 13-1/2"
	SQ YD
STA 872+00 TO STA 887+00	2329.3
STA 887+00 TO STA 902+00	4183.3
STA 902+00 TO STA 907+00	520.1
SUBTOTAL MASON COUNTY	*7032.7*
STA 907+00 TO STA 932+00	2606.2
STA 932+00 TO STA 947+00	3346.7
SUBTOTAL CASS COUNTY	*5952.9*
TOTALS	**12986**

TEMPORARY RAMP SCHEDULE

APPROX. STATION	WIDTH	APPROXIMATE LOCATION	TEMP RAMP
	FT		SQ. YD
854+00	22	BEGINNING OF JOB	12.22
859+00	34	WOLF LAKE N. BR APPROACH	132.22
859+00	34	BR. OMISSION	75.56
865+00	34	BR. OMISSION	75.56
898+00	100	BOAT RAMP ACCESS RD	111.11
903+85	36	BR. OMISSION	80.00
SUBTOTAL MASON COUNTY			*486.67*
922+85	36	BR. OMISSION	80.00
953+00	22	END OF JOB	12.22
SUBTOTAL CASS COUNTY			*92.22*
TOTAL			**579**

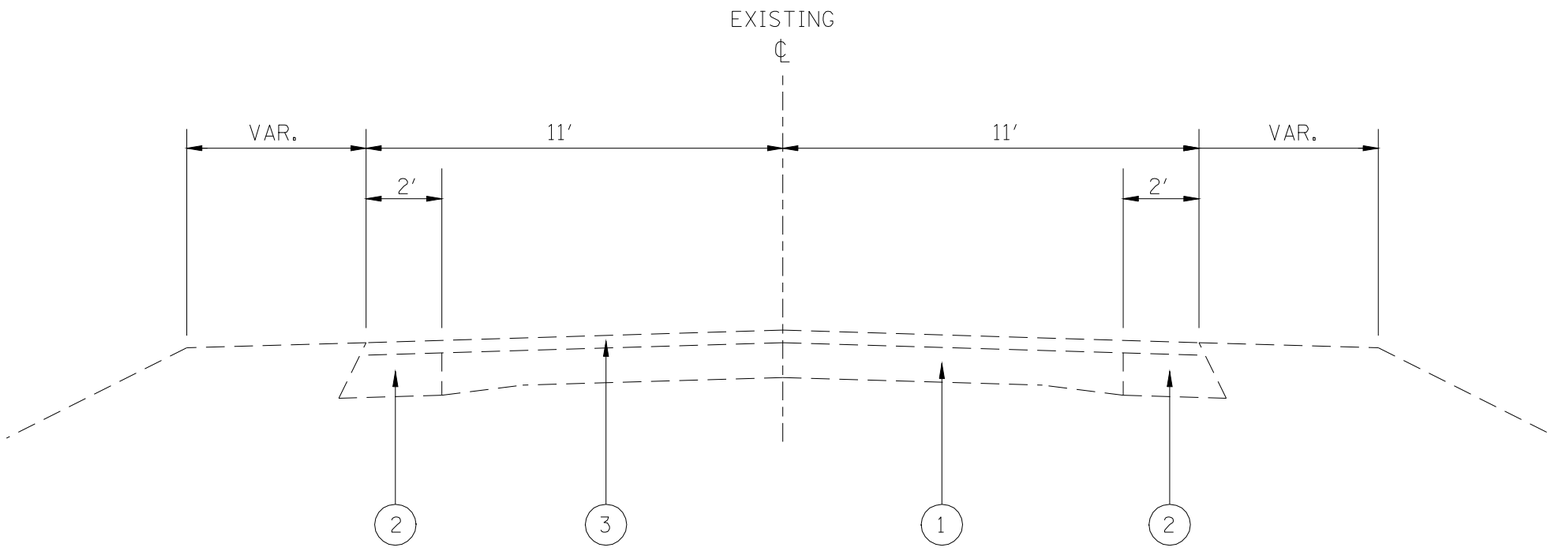

FAP 614 - EX TYPICAL SECTION

STA 854+00.00 TO STA 857+69.3
STA 857+69.3 TO STA 859+31.1 - EX HMA SHOULDERS (LT & RT) (4)
STA 859+31.1 TO STA 864+09.1 - EX SN 063-0007
STA 864+09.1 TO STA 865+10.0 - EX HMA SHOULDERS (LT & RT) (4)
STA 865+10.0 TO STA 901+77.5(LT), 904+02.0(RT)
STA 901+77.5(LT), 904+02.0(RT) TO STA 907+66.7 - EX HMA SHOULDERS (LT & RT) (4)
STA 907+66.7 TO STA 917+36.7 - EX SN 009-0005
STA 917+36.7 TO STA 921+92.5(RT), 923+36.1(LT) - EX HMA SHOULDERS (LT & RT) (4)
STA 921+92.5(RT), 923+36.1(LT) TO STA 928+25.5
STA 928+25.5 TO STA 929+88.4 - EX HMA SHOULDERS (LT & RT) (4)
STA 929+88.4 TO STA 935+98.3 - EX SN 009-0006
STA 935+98.3 TO STA 937+55.6(RT), 938+89.2(LT) - EX HMA SHOULDERS (LT & RT) (4)
STA 937+55.6(RT), 938+89.2(LT) TO STA 948+97.3
STA 948+97.3 TO STA 951+13.2 - EX SE TRANS.
STA 951+13.2 TO STA 953+00.00 - EX FULL SE = 6.0% (RT)

LEGEND

(1) EX PCC PAVEMENT (9-6-9)
(2) EX BASE COURSE WIDENING, 8″
(3) EX HMA RESURFACING, 6″ (± 2″)
(4) EX HMA SHOULDER/WIDENING, 12″ ±
(5) PR HMA SURFACE REMOVAL - VAR. DEPTH
(6) PR ROCKFILL - SPECIAL
(7) PR EARTH EMBANKMENT
(8) PR STONE DUMPED RIPRAP, CLASS A4
(9) PR TOP SOIL PLACEMENT, 4″
(10) PR LIME MODIFIED SOILS, 12″
(11) PR SUB-BASE GRANULAR MATERIAL, TYPE A, 12″
(12) PR HMA FULL DEPTH PAVEMENT, 13 1/2″
(13) PR HMA BASE COURSE/WIDENING, 12″
(14) PR SUB-BASE GRANULAR MATERIAL, TYPE C, VAR. DEPTH
(15) PR LEVELING BINDER (MACHINE METHOD), VAR. DEPTH
- WHEN LESS THAN 2 1/4″ THICK
PR HMA BINDER COURSE, VAR. DEPTH
- WHEN GREATER THAN AND EQUAL TO 2 1/4″ THICK
(16) PR HMA SURFACE COURSE, 1 1/2″
(17) PR HMA SHOULDERS, 6″
(18) PR HMA SHOULDERS, 8″
(19) PR HMA SHOULDERS, VAR. DEPTH
(20) PR AGGREGATE SHOULDER, TYPE B, 3″ (MIN.) & VAR DEPTH
(21) PR PAVEMENT MARKING, LINE - 5″
(22) PR REMOVAL AND DISPOSAL OF UNSUITABLE MATERIAL

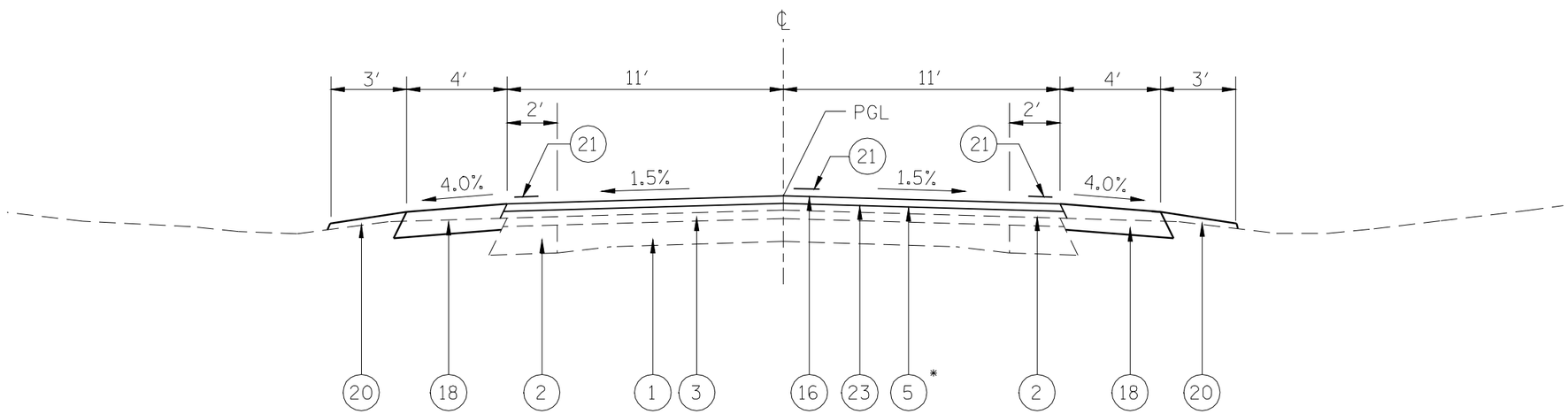

FAP 614 - TYPICAL SECTION #1

STA 767+80.00 TO STA 813+19.00 BK
STA EQU.: 813+19.00 BK = 810+00.00 AH
STA 810+00.00 AH TO STA 854+00.00

* SEE SCHEDULES FOR PROPOSED LOCATIONS

LEGEND

1. EX PCC PAVEMENT (9-6-9)
2. EX BASE COURSE WIDENING, 8″
3. EX HMA RESURFACING, 6″ (± 2″)
4. EX HMA SHOULDER/WIDENING, 12″ ±
5. PR HMA SURFACE REMOVAL - VAR. DEPTH
6. PR ROCKFILL - SPECIAL
7. PR EARTH EMBANKMENT
8. PR STONE DUMPED RIPRAP, CLASS A4
9. PR TOP SOIL PLACEMENT, 4″
10. PR LIME MODIFIED SOILS, 12″
11. PR SUB-BASE GRANULAR MATERIAL, TYPE A, 12″
12. PR HMA FULL DEPTH PAVEMENT, 13 1/2″
13. PR HMA BASE COURSE/WIDENING, 12″
14. PR SUB-BASE GRANULAR MATERIAL, TYPE C, VAR. DEPTH
15. PR LEVELING BINDER (MACHINE METHOD), VAR. DEPTH
    - WHEN LESS THAN 2 1/4″ THICK
    PR HMA BINDER COURSE, VAR. DEPTH
    - WHEN GREATER THAN AND EQUAL TO 2 1/4″ THICK
16. PR HMA SURFACE COURSE, 1 1/2″
17. PR HMA SHOULDERS, 6″
18. PR HMA SHOULDERS, 8″
19. PR HMA SHOULDERS, VAR. DEPTH
20. PR AGGREGATE SHOULDER, TYPE B, 3″ (MIN.) & VAR DEPTH
21. PR PAVEMENT MARKING, LINE - 5″
22. PR REMOVAL AND DISPOSAL OF UNSUITABLE MATERIAL
23. PR LEVELING BINDER, 3/4″

FILE NAME = c:\pw_work\PWIDOT\LAUGHLINRL\d0134498\sttypical.dgn	USER NAME = laughlinrl	DESIGNED -	REVISED -	STATE OF ILLINOIS DEPARTMENT OF TRANSPORTATION	TYPICAL SECTIONS			F.A.P RTE.	SECTION	COUNTY	TOTAL SHEETS / SHEET NO.
		DRAWN -	REVISED -					614	144(B-1)	CASS, MASON	351 / 14
	PLOT SCALE = 40.0000 ′ / IN.	CHECKED -	REVISED -							CONTRACT NO. 72A76	
	PLOT DATE = Mar-31-2009 07:49:06AM	DATE -	REVISED -		SCALE:	SHEET NO. 2 OF 11 SHEETS	STA. TO STA.	FED. ROAD DIST. NO.	ILLINOIS	FED. AID PROJECT	

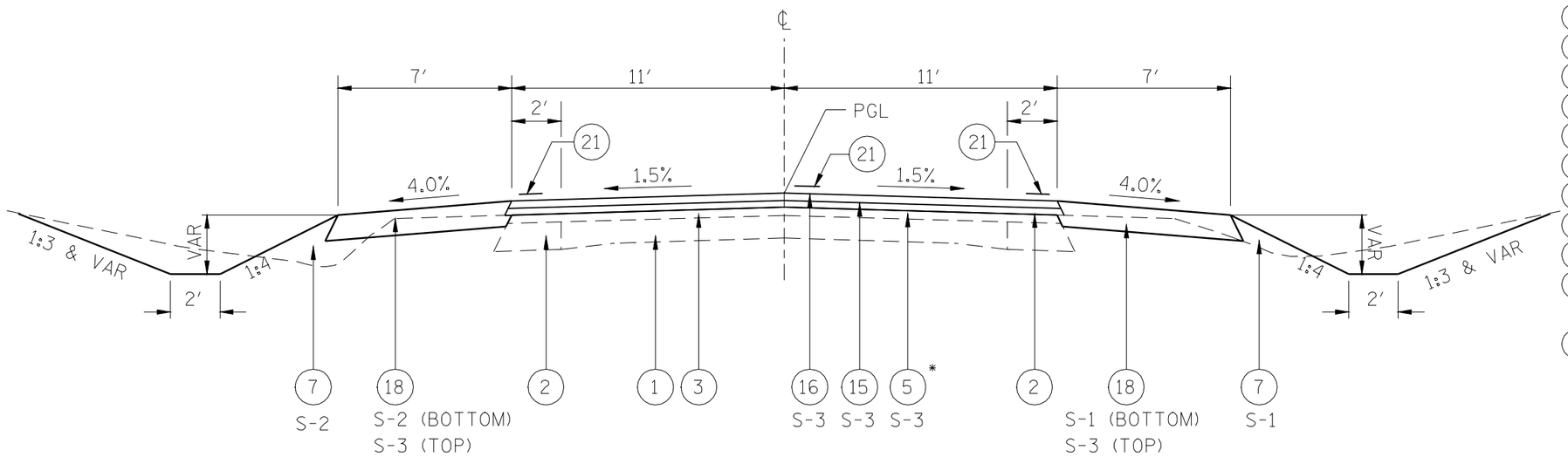

FAP 614 - TYPICAL SECTION #2

STA 854+00.00 TO STA 854+11.00 - USE 4′ HMA SHLDS. & 3′ AGG. SHLDS. INSTEAD OF 7′ HMA SHLDS.
RT STA 854+11.00 TO RT STA 854+69.00 - USE 4′ HMA SHLD. & 3′ AGG. SHLD. INSTEAD OF 7′ HMA SHLD.
LT STA 854+11.00 TO LT STA 854+69.00
STA 854+69.00 TO STA 857+40.00

* SEE SCHEDULES FOR PROPOSED LOCATIONS

LEGEND

1. EX PCC PAVEMENT (9-6-9)
2. EX BASE COURSE WIDENING, 8″
3. EX HMA RESURFACING, 6″ (± 2″)
4. EX HMA SHOULDER/WIDENING, 12″ ±
5. PR HMA SURFACE REMOVAL - VAR. DEPTH
6. PR ROCKFILL - SPECIAL
7. PR EARTH EMBANKMENT
8. PR STONE DUMPED RIPRAP, CLASS A4
9. PR TOP SOIL PLACEMENT, 4″
10. PR LIME MODIFIED SOILS, 12″
11. PR SUB-BASE GRANULAR MATERIAL, TYPE A, 12″
12. PR HMA FULL DEPTH PAVEMENT, 13 1/2″
13. PR HMA BASE COURSE/WIDENING, 12″
14. PR SUB-BASE GRANULAR MATERIAL, TYPE C, VAR. DEPTH
15. PR LEVELING BINDER (MACHINE METHOD), VAR. DEPTH
    - WHEN LESS THAN 2 1/4″ THICK
    PR HMA BINDER COURSE, VAR. DEPTH
    - WHEN GREATER THAN AND EQUAL TO 2 1/4″ THICK
16. PR HMA SURFACE COURSE, 1 1/2″
17. PR HMA SHOULDERS, 6″
18. PR HMA SHOULDERS, 8″
19. PR HMA SHOULDERS, VAR. DEPTH
20. PR AGGREGATE SHOULDER, TYPE B, 3″ (MIN.) & VAR DEPTH
21. PR PAVEMENT MARKING, LINE - 5″
22. PR REMOVAL AND DISPOSAL OF UNSUITABLE MATERIAL

S-1 REFERS TO STAGE I
S-2 REFERS TO STAGE II
S-3 REFERS TO STAGE III

FILE NAME = c:\pw_work\PWIDOT\LAUGHLINRL\d0134498\sttypical.dgn	USER NAME = laughlinrl	DESIGNED -	REVISED -	STATE OF ILLINOIS DEPARTMENT OF TRANSPORTATION	TYPICAL SECTIONS			F.A.P RTE.	SECTION	COUNTY	TOTAL SHEETS / SHEET NO.
		DRAWN -	REVISED -					614	144(B-1)	CASS, MASON	351 / 15
	PLOT SCALE = 40.0000 ′ / IN.	CHECKED -	REVISED -							CONTRACT NO. 72A76	
	PLOT DATE = Mar-31-2009 07:49:08AM	DATE -	REVISED -		SCALE:	SHEET NO. 3 OF 11 SHEETS	STA. TO STA.	FED. ROAD DIST. NO.	ILLINOIS	FED. AID PROJECT	

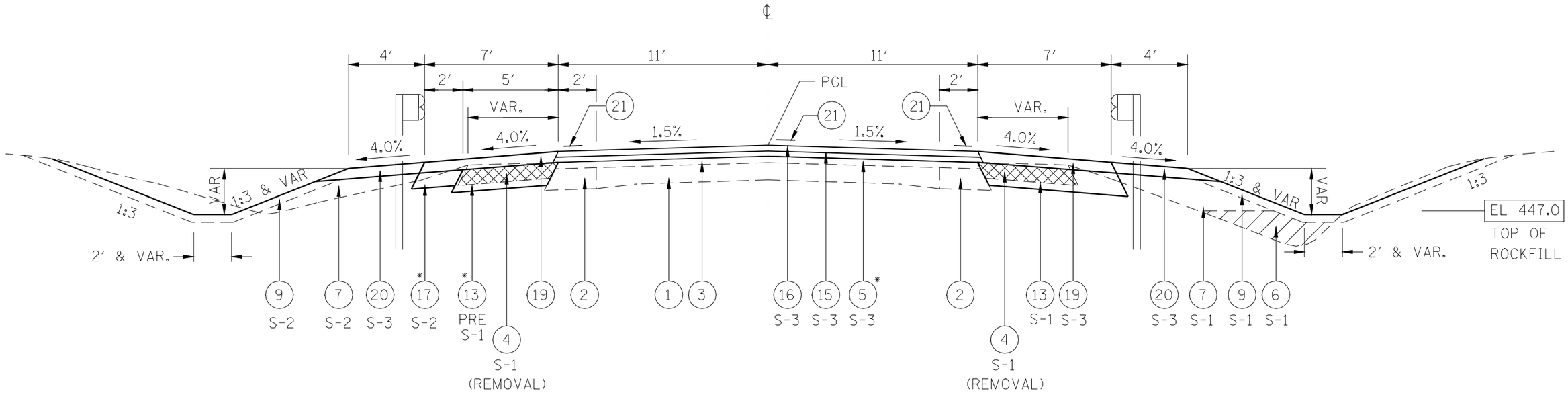

FAP 614 - TYPICAL SECTION #3

STA 857+40.00 TO STA 859+00.00
STA 864+36.50 TO STA 867+00.00

* SEE SCHEDULES FOR PROPOSED LOCATIONS

LEGEND

1. EX PCC PAVEMENT (9-6-9)
2. EX BASE COURSE WIDENING, 8″
3. EX HMA RESURFACING, 6″ (± 2″)
4. EX HMA SHOULDER/WIDENING, 12″ ±
5. PR HMA SURFACE REMOVAL - VAR. DEPTH
6. PR ROCKFILL - SPECIAL
7. PR EARTH EMBANKMENT
8. PR STONE DUMPED RIPRAP, CLASS A4
9. PR TOP SOIL PLACEMENT, 4″
10. PR LIME MODIFIED SOILS, 12″
11. PR SUB-BASE GRANULAR MATERIAL, TYPE A, 12″
12. PR HMA FULL DEPTH PAVEMENT, 13 1/2″
13. PR HMA BASE COURSE/WIDENING, 12″
14. PR SUB-BASE GRANULAR MATERIAL, TYPE C, VAR. DEPTH
15. PR LEVELING BINDER (MACHINE METHOD), VAR. DEPTH
    - WHEN LESS THAN 2 1/4″ THICK
    PR HMA BINDER COURSE, VAR. DEPTH
    - WHEN GREATER THAN AND EQUAL TO 2 1/4″ THICK
16. PR HMA SURFACE COURSE, 1 1/2″
17. PR HMA SHOULDERS, 6″
18. PR HMA SHOULDERS, 8″
19. PR HMA SHOULDERS, VAR. DEPTH
20. PR AGGREGATE SHOULDER, TYPE B, 3″ (MIN.) & VAR DEPTH
21. PR PAVEMENT MARKING, LINE - 5″
22. PR REMOVAL AND DISPOSAL OF UNSUITABLE MATERIAL

S-1 REFERS TO STAGE I
S-2 REFERS TO STAGE II
S-3 REFERS TO STAGE III

FILE NAME = c:\pw_work\PWIDOT\LAUGHLINRL\d0134498\sttypical.dgn	USER NAME = laughlinrl	DESIGNED -	REVISED -	STATE OF ILLINOIS DEPARTMENT OF TRANSPORTATION	TYPICAL SECTIONS	F.A.P RTE. 614	SECTION 144(B-1)	COUNTY CASS, MASON	TOTAL SHEETS 351	SHEET NO. 16
	PLOT SCALE = 40.0000 ′/ IN.	DRAWN -	REVISED -					CONTRACT NO. 72A76		
	PLOT DATE = Mar-31-2009 07:49:10AM	CHECKED -	REVISED -							
		DATE -	REVISED -		SCALE: SHEET NO. 4 OF 11 SHEETS STA. TO STA.	FED. ROAD DIST. NO.	ILLINOIS	FED. AID PROJECT		

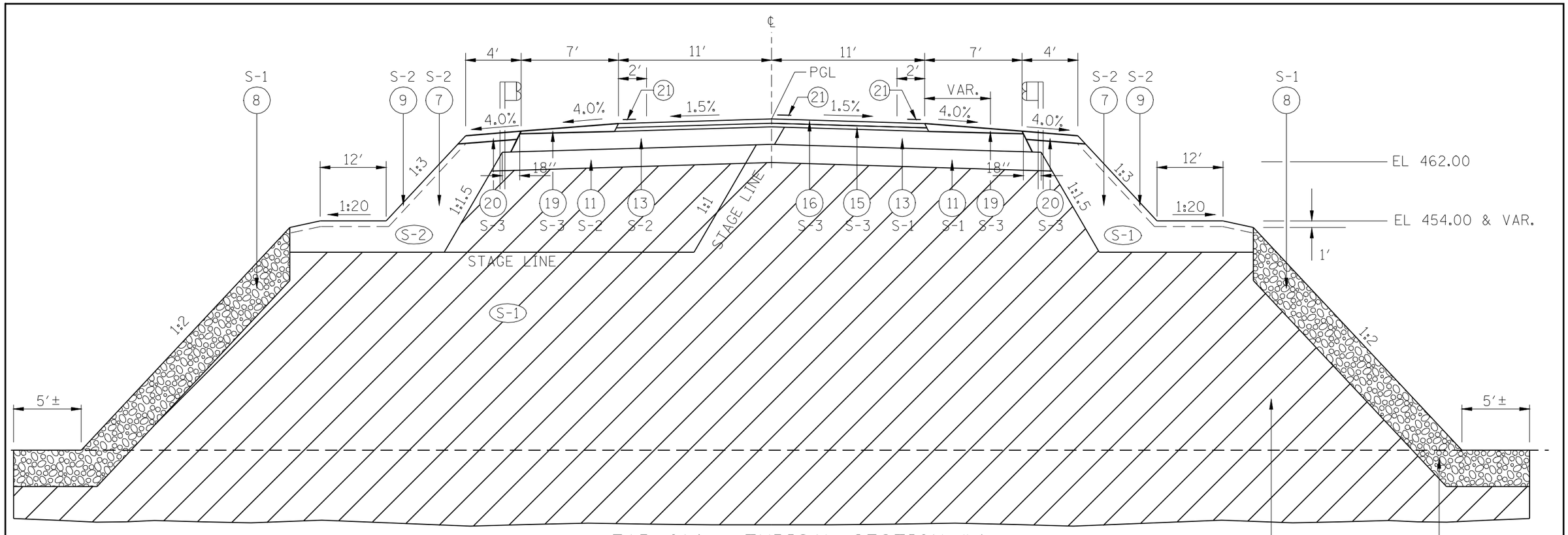

FAP 614 - TYPICAL SECTION #4

STA 859+00.00 TO STA 860+46.00
STA 860+46.00 TO STA 860+76.00 - PR BR APPR PAVT (SPECIAL) (SEE DETAILS)
STA 860+76.00 TO STA 864+06.50 - PR SN 063-0500 - SEE STRUCTURE DETAILS
STA 864+06.50 TO STA 864+36.50 - PR BR APPR PAVT (SEE DETAILS)
STA 864+36.50 TO STA 864+42.50 - PR BRIDGE APPROACH PAVT CONNECTOR (SEE DETAILS)

LEGEND

1. EX PCC PAVEMENT (9-6-9)
2. EX BASE COURSE WIDENING, 8″
3. EX HMA RESURFACING, 6″ (± 2″)
4. EX HMA SHOULDER/WIDENING, 12″ ±
5. PR HMA SURFACE REMOVAL - VAR. DEPTH
6. PR ROCKFILL - SPECIAL
7. PR EARTH EMBANKMENT
8. PR STONE DUMPED RIPRAP, CLASS A4
9. PR TOP SOIL PLACEMENT, 4″
10. PR LIME MODIFIED SOILS, 12″
11. PR SUB-BASE GRANULAR MATERIAL, TYPE A, 12″
12. PR HMA FULL DEPTH PAVEMENT, 13 1/2″
13. PR HMA BASE COURSE/WIDENING, 12″
14. PR SUB-BASE GRANULAR MATERIAL, TYPE C, VAR. DEPTH
15. PR LEVELING BINDER (MACHINE METHOD), VAR. DEPTH
    - WHEN LESS THAN 2 1/4″ THICK
    PR HMA BINDER COURSE, VAR. DEPTH
    - WHEN GREATER THAN AND EQUAL TO 2 1/4″ THICK
16. PR HMA SURFACE COURSE, 1 1/2″
17. PR HMA SHOULDERS, 6″
18. PR HMA SHOULDERS, 8″
19. PR HMA SHOULDERS, VAR. DEPTH
20. PR AGGREGATE SHOULDER, TYPE B, 3″ (MIN.) & VAR DEPTH
21. PR PAVEMENT MARKING, LINE - 5″
22. PR REMOVAL AND DISPOSAL OF UNSUITABLE MATERIAL

NOTE: EX PAVEMENT AND EX BRIDGE ARE NOT SHOWN ON TYPICAL SECTION, BUT REQUIRE REMOVAL

STA 859+00.00 TO STA 859+31.00 - EX PAVEMENT REMOVAL
STA 859+31.00 TO STA 864+09.00 - EX SN 063-0007 REMOVAL
STA 864+09.00 TO STA 865+00.00 - EX PAVEMENT REMOVAL

S-1 REFERS TO STAGE I
S-2 REFERS TO STAGE II
S-3 REFERS TO STAGE III

FILE NAME = c:\pw_work\PWIDOT\LAUGHLINRL\d0134498\sttypical.dgn	USER NAME = laughlinrl	DESIGNED -	REVISED -	STATE OF ILLINOIS DEPARTMENT OF TRANSPORTATION	TYPICAL SECTIONS	F.A.P RTE.	SECTION	COUNTY	TOTAL SHEETS	SHEET NO.
	PLOT SCALE = 40.0000 ′ / IN.	DRAWN -	REVISED -			614	144(B-1)	CASS, MASON	351	17
	PLOT DATE = Mar-31-2009 07:49:12AM	CHECKED -	REVISED -					CONTRACT NO. 72A76		
		DATE -	REVISED -		SCALE: SHEET NO. 5 OF 11 SHEETS STA. TO STA.	FED. ROAD DIST. NO.	ILLINOIS	FED. AID PROJECT		

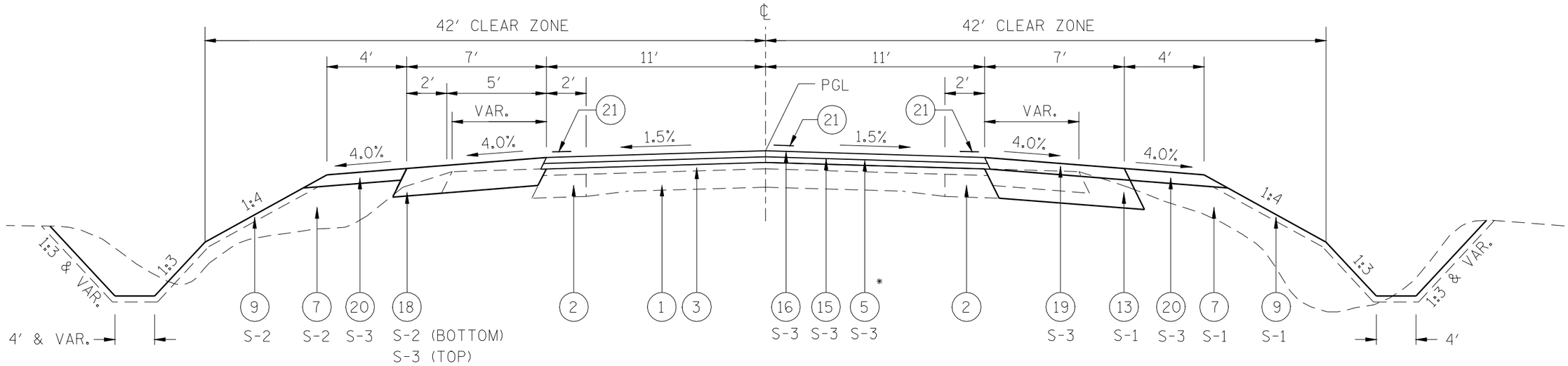

FAP 614 - TYPICAL SECTION #5

STA 867+00.00 TO STA 868+50.00 - TRANS. HMA SHLD. WIDTHS FROM 7.0' TO 4.0'
STA 868+50.00 TO STA 870+99.99 - USE 4.0' WIDE HMA SHLDS INSTEAD OF 7.0' WIDE

* SEE SCHEDULES FOR PROPOSED LOCATIONS

LEGEND

1. EX PCC PAVEMENT (9-6-9)
2. EX BASE COURSE WIDENING, 8''
3. EX HMA RESURFACING, 6'' (± 2'')
4. EX HMA SHOULDER/WIDENING, 12'' ±
5. PR HMA SURFACE REMOVAL - VAR. DEPTH
6. PR ROCKFILL - SPECIAL
7. PR EARTH EMBANKMENT
8. PR STONE DUMPED RIPRAP, CLASS A4
9. PR TOP SOIL PLACEMENT, 4''
10. PR LIME MODIFIED SOILS, 12''
11. PR SUB-BASE GRANULAR MATERIAL, TYPE A, 12''
12. PR HMA FULL DEPTH PAVEMENT, 13 1/2''
13. PR HMA BASE COURSE/WIDENING, 12''
14. PR SUB-BASE GRANULAR MATERIAL, TYPE C, VAR. DEPTH
15. PR LEVELING BINDER (MACHINE METHOD), VAR. DEPTH
    - WHEN LESS THAN 2 1/4'' THICK PR HMA BINDER COURSE, VAR. DEPTH
    - WHEN GREATER THAN AND EQUAL TO 2 1/4'' THICK
16. PR HMA SURFACE COURSE, 1 1/2''
17. PR HMA SHOULDERS, 6''
18. PR HMA SHOULDERS, 8''
19. PR HMA SHOULDERS, VAR. DEPTH
20. PR AGGREGATE SHOULDER, TYPE B, 3'' (MIN.) & VAR DEPTH
21. PR PAVEMENT MARKING, LINE - 5''
22. PR REMOVAL AND DISPOSAL OF UNSUITABLE MATERIAL

S-1 REFERS TO STAGE I
S-2 REFERS TO STAGE II
S-3 REFERS TO STAGE III

FILE NAME = c:\pw_work\PWIDOT\LAUGHLINRL\d0134498\sttypical.dgn	USER NAME = laughlinrl	DESIGNED -	REVISED -	STATE OF ILLINOIS DEPARTMENT OF TRANSPORTATION	TYPICAL SECTIONS	F.A.P RTE. 614	SECTION 144(B-1)	COUNTY CASS, MASON	TOTAL SHEETS 351	SHEET NO. 18
	PLOT SCALE = 40.0000 '/ IN.	DRAWN -	REVISED -					CONTRACT NO. 72A76		
	PLOT DATE = Mar-31-2009 07:49:14AM	CHECKED -	REVISED -							
		DATE -	REVISED -		SCALE: SHEET NO. 6 OF 11 SHEETS STA. TO STA.	FED. ROAD DIST. NO.	ILLINOIS	FED. AID PROJECT		

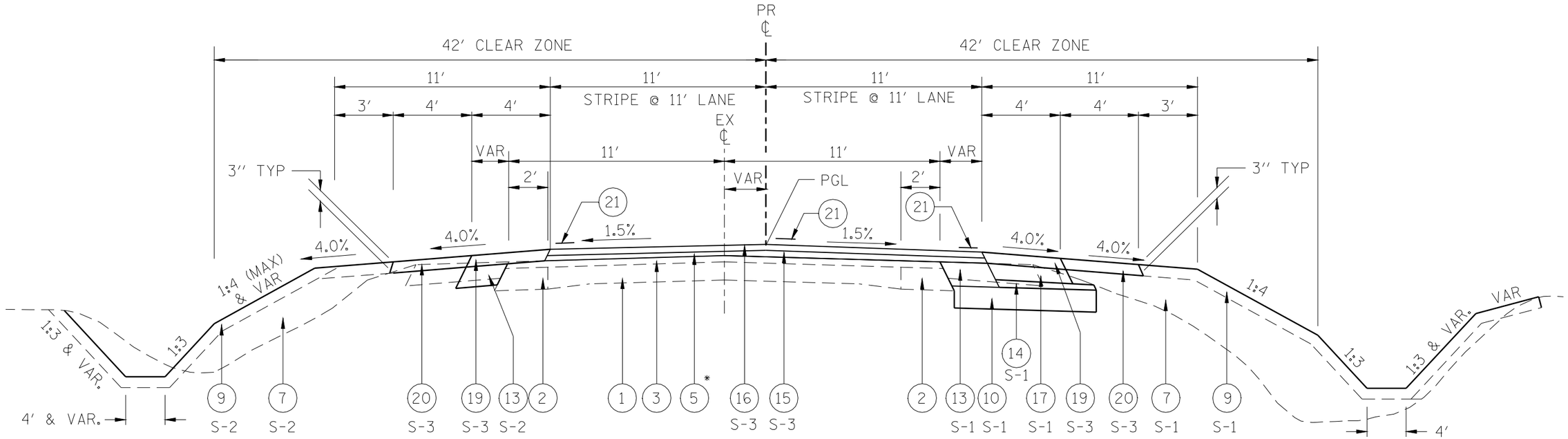

FAP 614 - TYPICAL SECTION #6

STA 870+99.99 TO STA 874+21.04

* SEE SCHEDULES FOR PROPOSED LOCATIONS

LEGEND

1. EX PCC PAVEMENT (9-6-9)
2. EX BASE COURSE WIDENING, 8″
3. EX HMA RESURFACING, 6″ (± 2″)
4. EX HMA SHOULDER/WIDENING, 12″ ±
5. PR HMA SURFACE REMOVAL - VAR. DEPTH
6. PR ROCKFILL - SPECIAL
7. PR EARTH EMBANKMENT
8. PR STONE DUMPED RIPRAP, CLASS A4
9. PR TOP SOIL PLACEMENT, 4″
10. PR LIME MODIFIED SOILS, 12″
11. PR SUB-BASE GRANULAR MATERIAL, TYPE A, 12″
12. PR HMA FULL DEPTH PAVEMENT, 13 1/2″
13. PR HMA BASE COURSE/WIDENING, 12″
14. PR SUB-BASE GRANULAR MATERIAL, TYPE C, VAR. DEPTH
15. PR LEVELING BINDER (MACHINE METHOD), VAR. DEPTH
    - WHEN LESS THAN 2 1/4″ THICK PR HMA BINDER COURSE, VAR. DEPTH
    - WHEN GREATER THAN AND EQUAL TO 2 1/4″ THICK
16. PR HMA SURFACE COURSE, 1 1/2″
17. PR HMA SHOULDERS, 6″
18. PR HMA SHOULDERS, 8″
19. PR HMA SHOULDERS, VAR. DEPTH
20. PR AGGREGATE SHOULDER, TYPE B, 3″ (MIN.) & VAR DEPTH
21. PR PAVEMENT MARKING, LINE - 5″
22. PR REMOVAL AND DISPOSAL OF UNSUITABLE MATERIAL

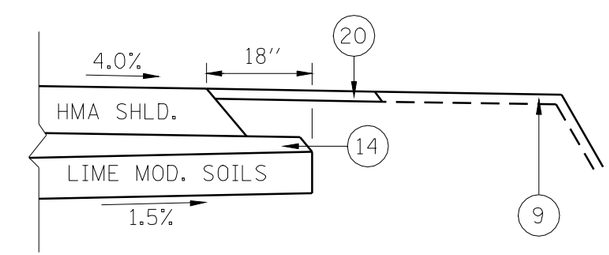

LIMITS OF LIME MODIFIED SOILS

S-1 REFERS TO STAGE I
S-2 REFERS TO STAGE II
S-3 REFERS TO STAGE III

FILE NAME = c:\pw_work\PWIDOT\LAUGHLINRL\d0134498\sttypical.dgn	USER NAME = laughlinrl	DESIGNED -	REVISED -	STATE OF ILLINOIS DEPARTMENT OF TRANSPORTATION	TYPICAL SECTIONS	F.A.P RTE.	SECTION	COUNTY	TOTAL SHEETS	SHEET NO.
		DRAWN -	REVISED -			614	144(B-1)	CASS, MASON	351	19
	PLOT SCALE = 40.0000 ′ / IN.	CHECKED -	REVISED -					CONTRACT NO. 72A76		
	PLOT DATE = Mar-31-2009 07:49:16AM	DATE -	REVISED -		SCALE: SHEET NO. 7 OF 11 SHEETS STA. TO STA.	FED. ROAD DIST. NO.	ILLINOIS	FED. AID PROJECT		

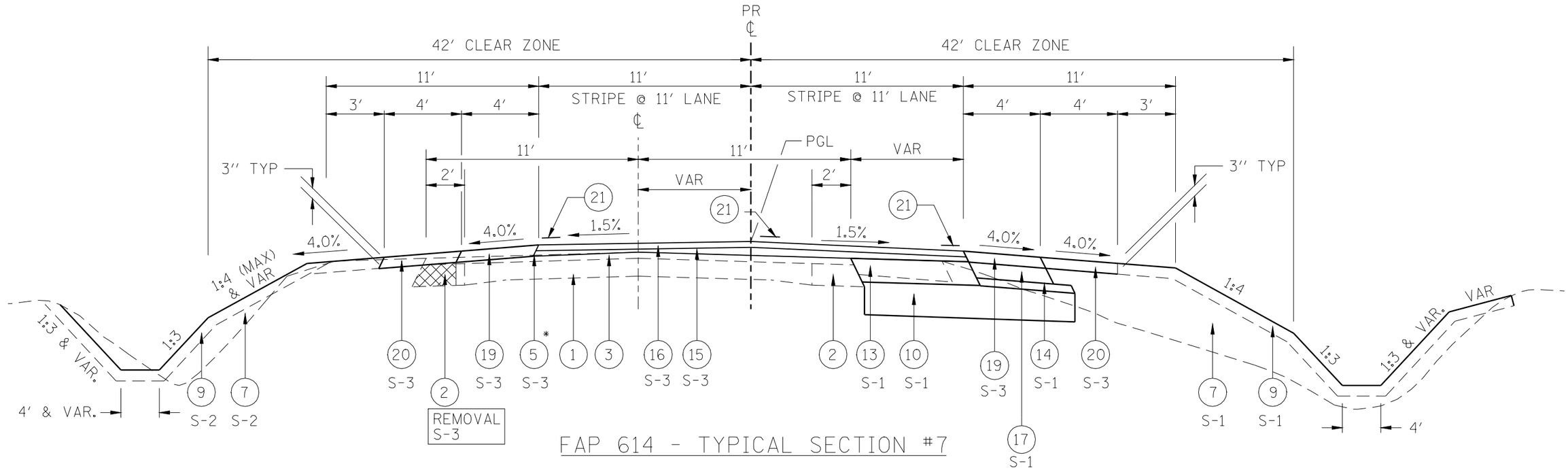

FAP 614 - TYPICAL SECTION #7

STA 874+21.04 TO STA 877+00.00
STA 877+00.00 TO STA 879+00.00 - TRANS. PAVT. WIDTH FROM 22.0′ TO 24.0′;
TRANS. HMA SHLD. WIDTHS FROM 4.0′ TO 3.0′
STA 944+00.00 TO STA 948+50.00 - PR PVT. WIDTH = 24.0′ (STRIPE & 12.0′ LANES) INSTEAD OF 22.0′; PR HMA SHLD. WIDTHS = 3.0′
STA 948+50.00 TO STA 950+00.00 - TRANS. PVT. WIDTH FROM 24.0′ TO 22.0′; INSTEAD OF 4.0′ (TOTAL SHLD. WIDTHS = 10.0′ INSTEAD OF 11.0′)
TRANS. HMA SHLD. WIDTHS FROM 3.0′ TO 1.0′;
MAINTAIN 4.0′ PR AGG. SHLD. WIDTHS;
TRANS. TOTAL SHLD. WIDTHS 10.0′ TO 5.0′

* SEE SCHEDULES FOR PROPOSED LOCATIONS

LEGEND

1. EX PCC PAVEMENT (9-6-9)
2. EX BASE COURSE WIDENING, 8″
3. EX HMA RESURFACING, 6″ (± 2″)
4. EX HMA SHOULDER/WIDENING, 12″ ±
5. PR HMA SURFACE REMOVAL - VAR. DEPTH
6. PR ROCKFILL - SPECIAL
7. PR EARTH EMBANKMENT
8. PR STONE DUMPED RIPRAP, CLASS A4
9. PR TOP SOIL PLACEMENT, 4″
10. PR LIME MODIFIED SOILS, 12″
11. PR SUB-BASE GRANULAR MATERIAL, TYPE A, 12″
12. PR HMA FULL DEPTH PAVEMENT, 13 1/2″
13. PR HMA BASE COURSE/WIDENING, 12″
14. PR SUB-BASE GRANULAR MATERIAL, TYPE C, VAR. DEPTH
15. PR LEVELING BINDER (MACHINE METHOD), VAR. DEPTH
    - WHEN LESS THAN 2 1/4″ THICK
    PR HMA BINDER COURSE, VAR. DEPTH
    - WHEN GREATER THAN AND EQUAL TO 2 1/4″ THICK
16. PR HMA SURFACE COURSE, 1 1/2″
17. PR HMA SHOULDERS, 6″
18. PR HMA SHOULDERS, 8″
19. PR HMA SHOULDERS, VAR. DEPTH
20. PR AGGREGATE SHOULDER, TYPE B, 3″ (MIN.) & VAR DEPTH
21. PR PAVEMENT MARKING, LINE - 5″
22. PR REMOVAL AND DISPOSAL OF UNSUITABLE MATERIAL

S-1 REFERS TO STAGE I
S-2 REFERS TO STAGE II
S-3 REFERS TO STAGE III

NOTE: STA 948+73.25 TO STA 950+56.40 IS IN SE TRANS., SLOPE PAVEMENT ACCORDINGLY

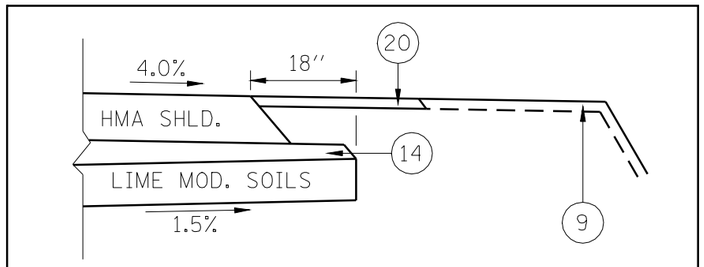

LIMITS OF LIME MODIFIED SOILS

FILE NAME = c:\pw_work\PWIDOT\LAUGHLINRL\d0134498\sttypical.dgn	USER NAME = laughlinrl	DESIGNED -	REVISED -	STATE OF ILLINOIS DEPARTMENT OF TRANSPORTATION	TYPICAL SECTIONS	F.A.P RTE.	SECTION	COUNTY	TOTAL SHEETS	SHEET NO.
	PLOT SCALE = 40.0000 ′/ IN.	DRAWN -	REVISED -			614	144(B-1)	CASS, MASON	351	20
	PLOT DATE = Mar-31-2009 07:49:18AM	CHECKED -	REVISED -					CONTRACT NO. 72A76		
		DATE -	REVISED -		SCALE: SHEET NO. 8 OF 11 SHEETS STA. TO STA.	FED. ROAD DIST. NO.	ILLINOIS	FED. AID PROJECT		

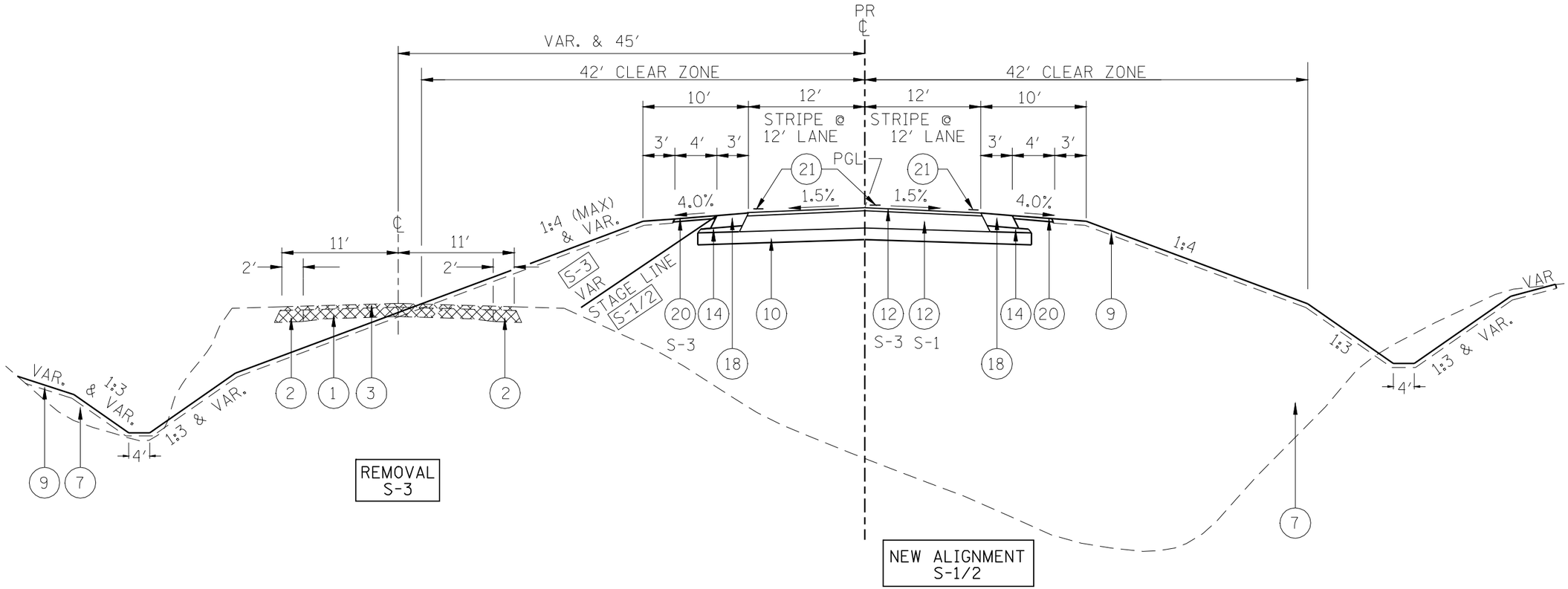

FAP 614 - TYPICAL SECTION #8

STA 879+00.00 TO STA 895+50.00
STA 895+50.00 TO STA 897+00.00 - TRANS. HMA SHLD. WIDTHS FROM 3.0' TO 6.0';
MAINTAIN 10.0' TOTAL SHLD. WIDTH AND 4.0' AGG. SHLD. WIDTH

S-1 REFERS TO STAGE I
S-2 REFERS TO STAGE II
S-3 REFERS TO STAGE III

LEGEND

1. EX PCC PAVEMENT (9-6-9)
2. EX BASE COURSE WIDENING, 8''
3. EX HMA RESURFACING, 6'' (± 2'')
4. EX HMA SHOULDER/WIDENING, 12'' ±
5. PR HMA SURFACE REMOVAL - VAR. DEPTH
6. PR ROCKFILL - SPECIAL
7. PR EARTH EMBANKMENT
8. PR STONE DUMPED RIPRAP, CLASS A4
9. PR TOP SOIL PLACEMENT, 4''
10. PR LIME MODIFIED SOILS, 12''
11. PR SUB-BASE GRANULAR MATERIAL, TYPE A, 12''
12. PR HMA FULL DEPTH PAVEMENT, 13 1/2''
13. PR HMA BASE COURSE/WIDENING, 12''
14. PR SUB-BASE GRANULAR MATERIAL, TYPE C, VAR. DEPTH
15. PR LEVELING BINDER (MACHINE METHOD), VAR. DEPTH
    - WHEN LESS THAN 2 1/4'' THICK
    PR HMA BINDER COURSE, VAR. DEPTH
    - WHEN GREATER THAN AND EQUAL TO 2 1/4'' THICK
16. PR HMA SURFACE COURSE, 1 1/2''
17. PR HMA SHOULDERS, 6''
18. PR HMA SHOULDERS, 8''
19. PR HMA SHOULDERS, VAR. DEPTH
20. PR AGGREGATE SHOULDER, TYPE B, 3'' (MIN.) & VAR DEPTH
21. PR PAVEMENT MARKING, LINE - 5''
22. PR REMOVAL AND DISPOSAL OF UNSUITABLE MATERIAL

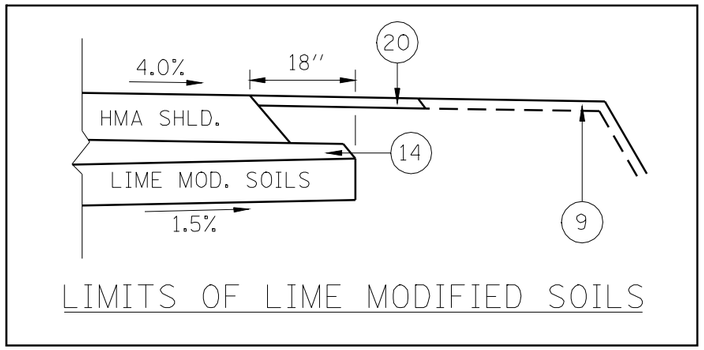

LIMITS OF LIME MODIFIED SOILS

FILE NAME = c:\pw_work\PWIDOT\LAUGHLINRL\d0134498\sttypical.dgn	USER NAME = laughlinrl	DESIGNED -	REVISED -	STATE OF ILLINOIS DEPARTMENT OF TRANSPORTATION	TYPICAL SECTIONS	F.A.P RTE. 614	SECTION 144(B-1)	COUNTY CASS, MASON	TOTAL SHEETS 351	SHEET NO. 21
	PLOT SCALE = 40.0000 '/ IN.	DRAWN -	REVISED -					CONTRACT NO. 72A76		
	PLOT DATE = Mar-31-2009 07:49:20AM	CHECKED -	REVISED -							
		DATE -	REVISED -		SCALE: SHEET NO. 9 OF 11 SHEETS STA. TO STA.	FED. ROAD DIST. NO.	ILLINOIS	FED. AID PROJECT		

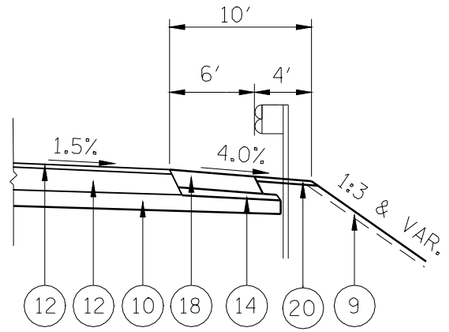

PR GUARDRAIL SECTION

(SEE SCHEDULE FOR LOCATIONS)

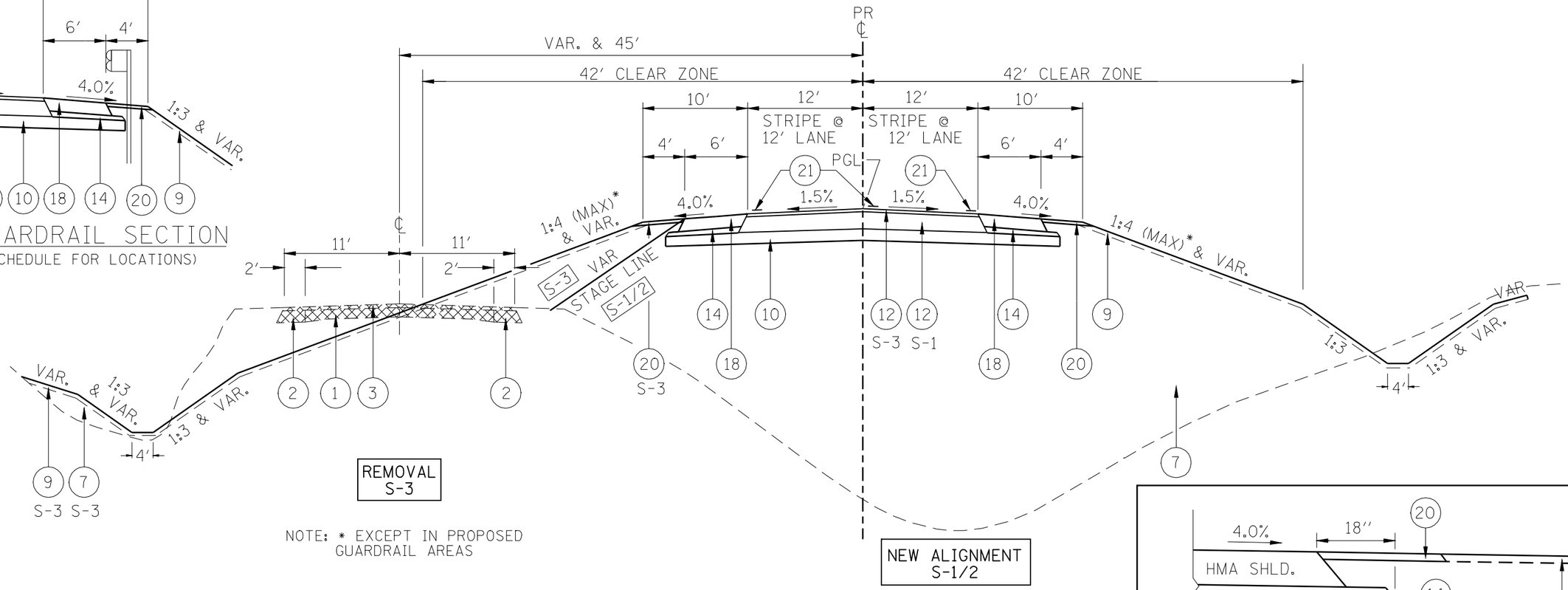

NOTE: * EXCEPT IN PROPOSED GUARDRAIL AREAS

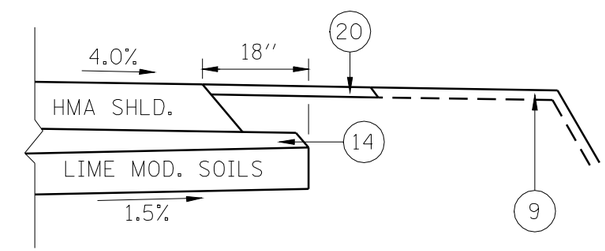

LIMITS OF LIME MODIFIED SOILS

FAP 614 - TYPICAL SECTION #9

STA 897+00.00	TO	STA 903+86.55	
STA 903+86.55	TO	STA 904+16.55	- PR BR. APPR. PAVT (STD 420401)
STA 904+16.00	TO	STA 922+36.00	- PR SN 009-0510 (SEE DETAILS)
STA 922+35.45	TO	STA 922+65.45	- PR BR. APPR PAVT. (STD 420401)
STA 922+65.45	TO	STA 942+50.00	- EX SN 009-0006 REMOVAL WITHIN RANGE - SEE PR SN 009-2509 DETAILS
STA 942+50.00	TO	STA 944+00.00	- TRANS. HMA SHLD. WIDTHS FROM 6.0' TO 3.0'; MAINTAIN 10.0' TOTAL SHOULDER WIDTH AND 4.0' AGG. SHLD. WIDTH

LEGEND

1. EX PCC PAVEMENT (9-6-9)
2. EX BASE COURSE WIDENING, 8''
3. EX HMA RESURFACING, 6'' (± 2'')
4. EX HMA SHOULDER/WIDENING, 12'' ±
5. PR HMA SURFACE REMOVAL - VAR. DEPTH
6. PR ROCKFILL - SPECIAL
7. PR EARTH EMBANKMENT
8. PR STONE DUMPED RIPRAP, CLASS A4
9. PR TOP SOIL PLACEMENT, 4''
10. PR LIME MODIFIED SOILS, 12''
11. PR SUB-BASE GRANULAR MATERIAL, TYPE A, 12''
12. PR HMA FULL DEPTH PAVEMENT, 13 1/2''
13. PR HMA BASE COURSE/WIDENING, 12''
14. PR SUB-BASE GRANULAR MATERIAL, TYPE C, VAR. DEPTH
15. PR LEVELING BINDER (MACHINE METHOD), VAR. DEPTH
    - WHEN LESS THAN 2 1/4'' THICK PR HMA BINDER COURSE, VAR. DEPTH
    - WHEN GREATER THAN AND EQUAL TO 2 1/4'' THICK
16. PR HMA SURFACE COURSE, 1 1/2''
17. PR HMA SHOULDERS, 6''
18. PR HMA SHOULDERS, 8''
19. PR HMA SHOULDERS, VAR. DEPTH
20. PR AGGREGATE SHOULDER, TYPE B, 3'' (MIN.) & VAR DEPTH
21. PR PAVEMENT MARKING, LINE - 5''
22. PR REMOVAL AND DISPOSAL OF UNSUITABLE MATERIAL

NOTE: EX BRIDGE (SN 009-0006) IS NOT SHOWN ON TYPICAL SECTION, BUT REQUIRE REMOVAL

S-1 REFERS TO STAGE I
S-2 REFERS TO STAGE II
S-3 REFERS TO STAGE III

FILE NAME = c:\pw_work\PWIDOT\LAUGHLINRL\d0134498\sttypical.dgn	USER NAME = laughlinrl	DESIGNED -	REVISED -
		DRAWN -	REVISED -
	PLOT SCALE = 40.0000 '/ IN.	CHECKED -	REVISED -
	PLOT DATE = Mar-31-2009 07:49:22AM	DATE -	REVISED -

STATE OF ILLINOIS
DEPARTMENT OF TRANSPORTATION

TYPICAL SECTIONS

SCALE: | SHEET NO. 10 OF 11 SHEETS | STA. | TO STA.

F.A.P RTE.	SECTION	COUNTY	TOTAL SHEETS	SHEET NO.
614	144(B-1)	CASS, MASON	351	22

CONTRACT NO. 72A76

FED. ROAD DIST. NO. | ILLINOIS | FED. AID PROJECT

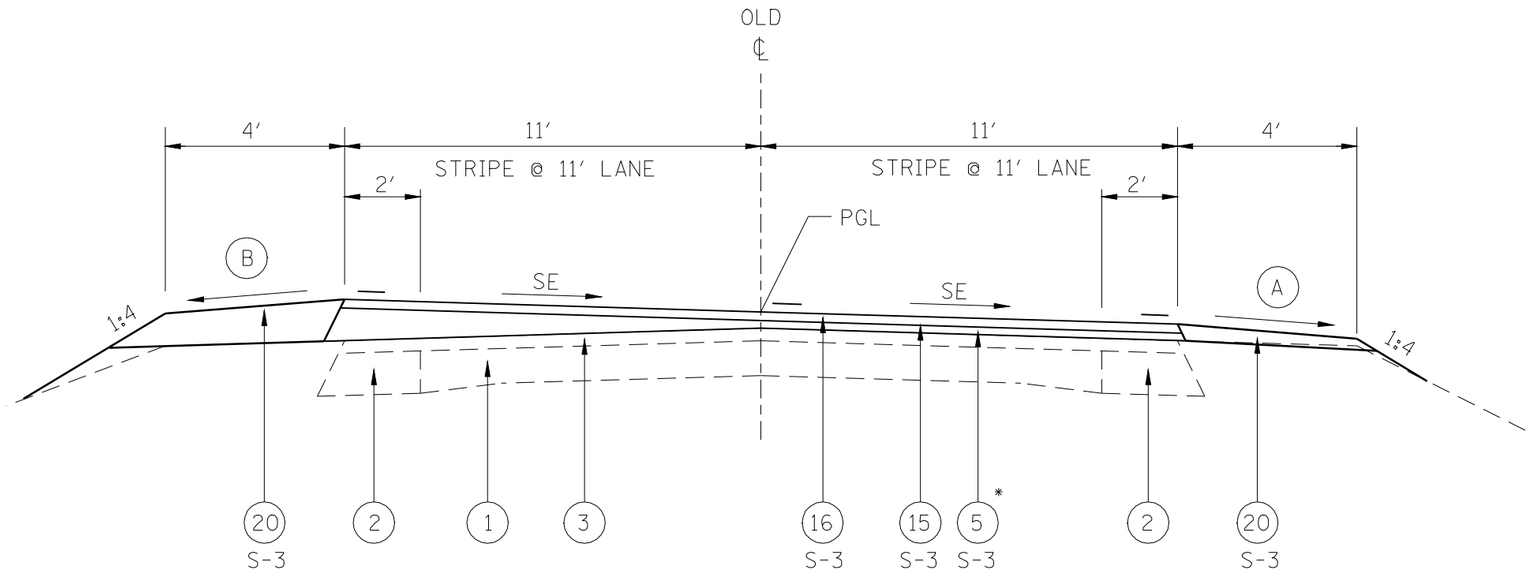

FAP 614 - TYPICAL SECTION #10

STA 950+00.00 TO STA 953+00.00

NOTE: STA 948+73.25 TO STA 950+56.40 IS IN SE TRANS., AND
STA 950+56.40 TO STA 953+00.00 IS IN FULL SE = 4.0%
- SLOPE PAVEMENT AND SHOULDERS ACCORDINGLY

* SEE SCHEDULES FOR PROPOSED LOCATIONS

SHLD SLOPES IN SE:

(A) LOW SIDE - SLOPE SHOULDER SAME AS SE, BUT NOT LESS THAN 4.0%

(B) HIGH SIDE - SLOPE SHOULDER AT 4.0%, WHEN PAVEMENT SLOPE IS LESS THAN 4.0%. WHEN SE EXCEEDS 4.0%, SLOPE SHLD. NOT TO EXCEED ALGEBRAIC DIFFERENCE OF 8.0% BETWEEN PAVEMENT AND SHOULDER.

LEGEND

(1) EX PCC PAVEMENT (9-6-9)
(2) EX BASE COURSE WIDENING, 8″
(3) EX HMA RESURFACING, 6″ (± 2″)
(4) EX HMA SHOULDER/WIDENING, 12″ ±
(5) PR HMA SURFACE REMOVAL - VAR. DEPTH
(6) PR ROCKFILL - SPECIAL
(7) PR EARTH EMBANKMENT
(8) PR STONE DUMPED RIPRAP, CLASS A4
(9) PR TOP SOIL PLACEMENT, 4″
(10) PR LIME MODIFIED SOILS, 12″
(11) PR SUB-BASE GRANULAR MATERIAL, TYPE A, 12″
(12) PR HMA FULL DEPTH PAVEMENT, 13 1/2″
(13) PR HMA BASE COURSE/WIDENING, 12″
(14) PR SUB-BASE GRANULAR MATERIAL, TYPE C, VAR. DEPTH
(15) PR LEVELING BINDER (MACHINE METHOD), VAR. DEPTH
- WHEN LESS THAN 2 1/4″ THICK
PR HMA BINDER COURSE, VAR. DEPTH
- WHEN GREATER THAN AND EQUAL TO 2 1/4″ THICK
(16) PR HMA SURFACE COURSE, 1 1/2″
(17) PR HMA SHOULDERS, 6″
(18) PR HMA SHOULDERS, 8″
(19) PR HMA SHOULDERS, VAR. DEPTH
(20) PR AGGREGATE SHOULDER, TYPE B, 3″ (MIN.) & VAR DEPTH
(21) PR PAVEMENT MARKING, LINE - 5″
(22) PR REMOVAL AND DISPOSAL OF UNSUITABLE MATERIAL

S-1 REFERS TO STAGE I
S-2 REFERS TO STAGE II
S-3 REFERS TO STAGE III

FILE NAME = c:\pw_work\PWIDOT\LAUGHLINRL\d0134498\sttypical.dgn	USER NAME = laughlinrl	DESIGNED -	REVISED -	STATE OF ILLINOIS DEPARTMENT OF TRANSPORTATION	TYPICAL SECTIONS	F.A.P RTE.	SECTION	COUNTY	TOTAL SHEETS / SHEET NO.
	PLOT SCALE = 40.0000 ′/ IN.	DRAWN -	REVISED -			614	144(B-1)	CASS, MASON	351 / 23
	PLOT DATE = Mar-31-2009 07:49:24AM	CHECKED -	REVISED -					CONTRACT NO. 72A76	
		DATE -	REVISED -		SCALE: / SHEET NO. 11 OF 11 SHEETS / STA. / TO STA.	FED. ROAD DIST. NO.	ILLINOIS	FED. AID PROJECT	

NO
X-TIES
AVAILABLE

POT 35+00.00
(S.BANK SANG. RIV.)

NO
X-TIES
AVAILABLE

POT 898+00.00
(PR IL 78)

POT 0+00.00
(ACCESS RD)

NO
X-TIES
AVAILABLE

PC 0+62.00
(ACCESS RD)

NO
X-TIES
AVAILABLE

PI 1+02.00
(ACCESS RD)

NO
X-TIES
AVAILABLE

PT 1+24.83
(ACCESS RD)

NO
X-TIES
AVAILABLE

PI 7+34.21
(ACESS RD.)

NO
X-TIES
AVAILABLE

PI 8+45.12
(ACCESS RD.)

NO
X-TIES
AVAILABLE

POT 12+15.48
(ACCESS RD.)

NO
X-TIES
AVAILABLE

POT 12+15.48
(ACCESS RD.)

NO
X-TIES
AVAILABLE

POT 5+
(ACCESS RD) =

POT 100+00.00
(SEC. BOATRAMP)

NO
X-TIES
AVAILABLE

POT 102+00.00
(SEC. BOATRAMP)

NOTE:
HORIZONTAL CONTROL POINTS WITH NO TIES WILL BE
FLAGGED BY DISTRICT SURVEYS PRIOR TO CONSTRUCTION
ALONG WITH TEMPORARY BENCHMARK FOR VERTICAL CONTROL.

D-96-506-07

FILE NAME = c:\pw_work\PWIDOT\LAUGHLINRL\d0134498\htxties.dgn	USER NAME = laughlinrl	DESIGNED -	REVISED -
		DRAWN -	REVISED -
	PLOT SCALE = 100.0000 ' / IN.	CHECKED -	REVISED -
	PLOT DATE = Mar-31-2009 07:49:26AM	DATE -	REVISED -

STATE OF ILLINOIS
DEPARTMENT OF TRANSPORTATION

HORIZONTAL CONTROL
TIE POINTS

SCALE: | SHEET NO. OF SHEETS | STA. TO STA.

F.A.P RTE.	SECTION	COUNTY	TOTAL SHEETS	SHEET NO.
614	144(B-1, B-2)	CASS, MASON	351	24

CONTRACT NO. 72A76

FED. ROAD DIST. NO. | ILLINOIS | FED. AID PROJECT

PROPOSED ALIGNMENT CROSS TIES :

NO X-TIES AVAILABLE
PC STA 870+99.99
(PR IL 78)

NO X-TIES AVAILABLE
PI STA 873.63.18
(PR IL 78)

NO X-TIES AVAILABLE
PT STA 876 = 86.29
(PR IL 78)

NO X-TIES AVAILABLE
PC STA 881+86.26
(PR IL 78)

NO X-TIES AVAILABLE
PI STA 883+89.46
(PR IL 78)

NO X-TIES AVAILABLE
PT STA 886+52.56

NO X-TIES AVAILABLE
PC 936+24.34

NO X-TIES AVAILABLE
PI 939+29.82

NO X-TIES AVAILABLE
PT 942+35.31

NO X-TIES AVAILABLE
PC 950+07.56

NO X-TIES AVAILABLE
PI 955+44.29

NO X-TIES AVAILABLE
PI 960+29.18

NO X-TIES AVAILABLE
POT 907+00.00
(PR IL 78)=

POT 20+00.00
(N.BANK SANG. RIV.)

NO X-TIES AVAILABLE
POT 15+00.00
(N.BANK SANG. RIV.)

NO X-TIES AVAILABLE
POT 25+00.00
(N.BANK SANG. RIV.)

NO X-TIES AVAILABLE
POT 913+
(PR IL 78)=

POT 30+00.00
(S.BANK SANG. RIV.)

NO X-TIES AVAILABLE
POT 25+00.00
(S.BANK SANG. RIV.)

NOTE:
HORIZONTAL CONTROL POINTS WITH NO TIES WILL BE FLAGGED BY DISTRICT SURVEYS PRIOR TO CONSTRUCTION ALONG WITH TEMPORARY BENCHMARK FOR VERTICAL CONTROL.

D-96-506-07

FILE NAME = c:\pw_work\PWIDOT\LAUGHLINRL\d0134498\htxties.dgn	USER NAME = laughlinrl	DESIGNED -	REVISED -	STATE OF ILLINOIS DEPARTMENT OF TRANSPORTATION	HORIZONTAL CONTROL TIE POINTS	F.A.P RTE.	SECTION	COUNTY	TOTAL SHEETS	SHEET NO.
		DRAWN -	REVISED -			614	144(B-1, B-2)	CASS, MASON	351	25
	PLOT SCALE = 100.0000 ' / IN.	CHECKED -	REVISED -					CONTRACT NO. 72A76		
	PLOT DATE = Mar-31-2009 07:49:28AM	DATE -	REVISED -		SCALE: SHEET NO. OF SHEETS STA. TO STA.	FED. ROAD DIST. NO.	ILLINOIS	FED. AID PROJECT		

EXISTING ALIGNMENT CROSS TIES :

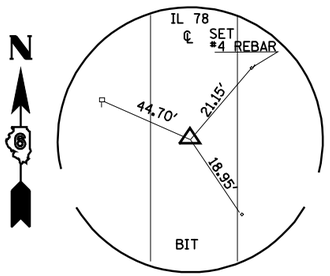

POT STA 827+71.438
SET: PK NAIL INSCHLD "X"

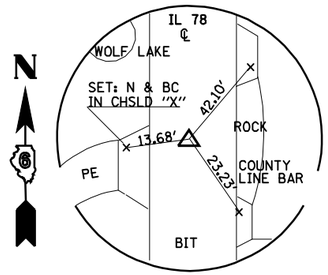

POT STA 857+31.192
SET: PK NAIL INSCHLD "X"

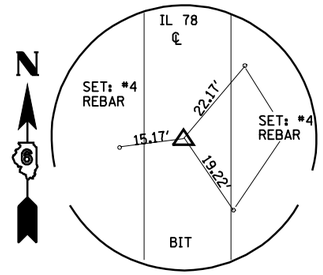

PI STA 886+90.947
(EX IL 78)
SET: PK NAIL INSCHLD "X"

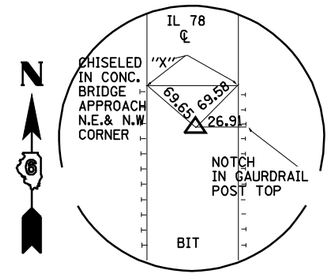

POT STA 906+98.714
(EX IL78)
SET: PK NAIL INSCHLD "X"

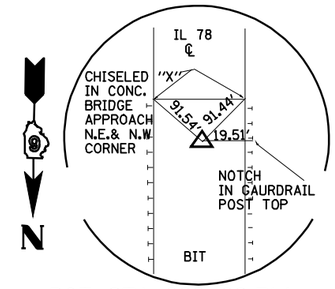

POT STA 928+98.714
(EX IL 78)
SET: PK NAIL INSCHLD "X"

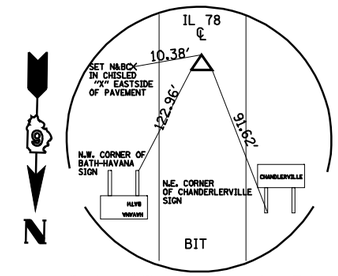

P.C. STA 950+60.836=
POT STA 950+62.476
(PR IL 78)
SET: PK NAIL INSCHLD "X"

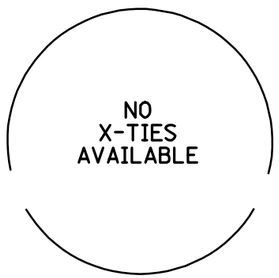

PT STA 827+71.438
SET: PK NAIL INSCHLD "X"

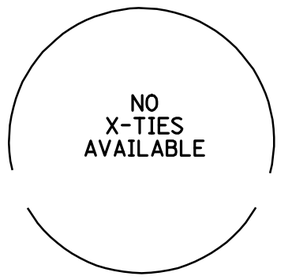

PT STA 827+71.438
SET: PK NAIL INSCHLD "X"

NOTE:
HORIZONTAL CONTROL POINTS WITH NO TIES WILL BE
FLAGGED BY DISTRICT SURVEYS PRIOR TO CONSTRUCTION
ALONG WITH TEMPORARY BENCHMARK FOR VERTICAL CONTROL.

D-96-506-07

FILE NAME = c:\pw_work\PWIDOT\LAUGHLINRL\d0134498\sntxties.dgn	USER NAME = laughlinrl	DESIGNED -	REVISED -	STATE OF ILLINOIS DEPARTMENT OF TRANSPORTATION	HORIZONTAL CONTROL TIE POINTS			F.A.P RTE.	SECTION	COUNTY	TOTAL SHEETS	SHEET NO.
		DRAWN -	REVISED -					614	144(B-1, B-2)	CASS, MASON	351	26
	PLOT SCALE = 100.0000 ' / IN.	CHECKED -	REVISED -							CONTRACT NO. 72A76		
	PLOT DATE = Mar-31-2009 07:49:30AM	DATE -	REVISED -		SCALE:	SHEET NO. OF SHEETS	STA. TO STA.	FED. ROAD DIST. NO.	ILLINOIS	FED. AID PROJECT		

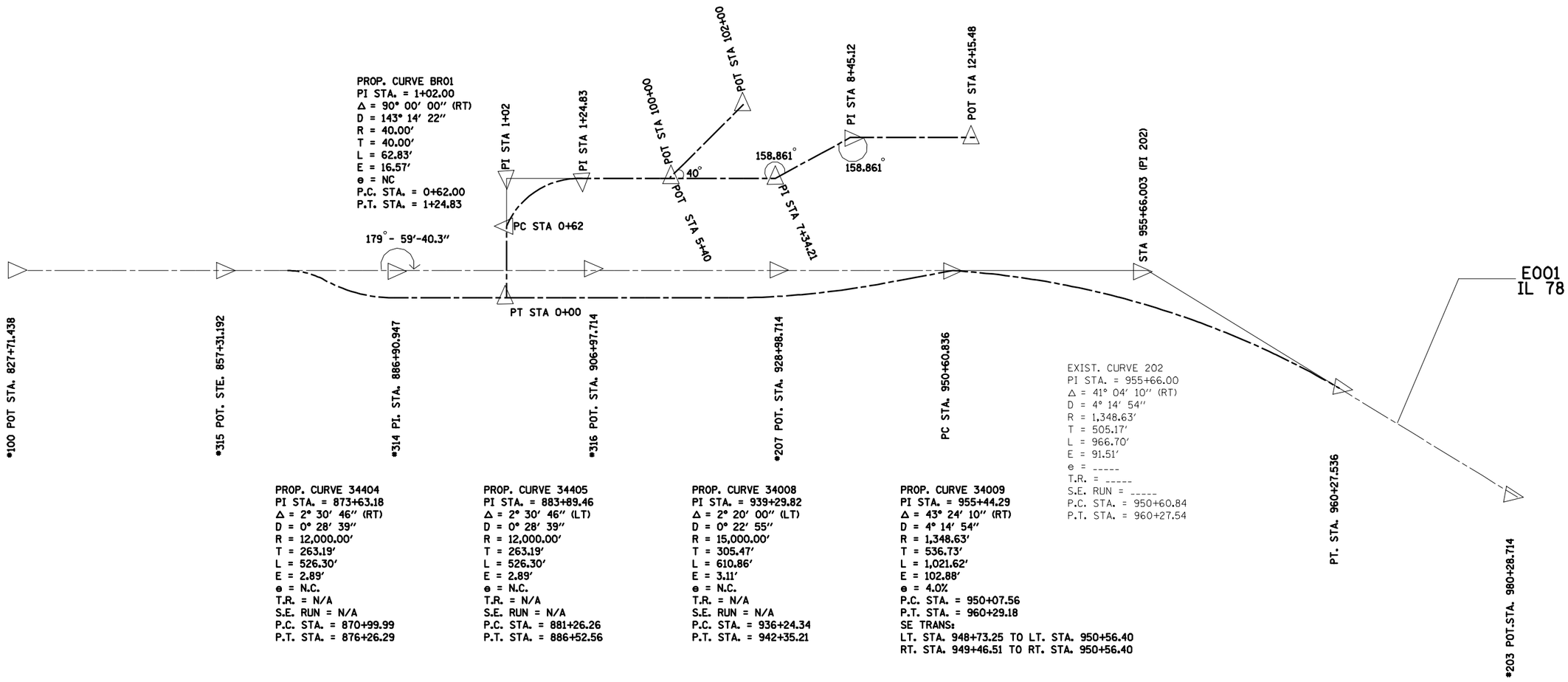

D-96-506-07

FILE NAME = c:\pw_work\PWIDOT\LAUGHLINRL\d0134498\ptxties.dgn	USER NAME = laughlnrl	DESIGNED -	REVISED -	STATE OF ILLINOIS DEPARTMENT OF TRANSPORTATION	HORIZONTAL CONTROL TIE POINTS	F.A.P RTE.	SECTION	COUNTY	TOTAL SHEETS	SHEET NO.
		DRAWN -	REVISED -			614	144(B-1, B-2)	CASS, MASON	351	27
	PLOT SCALE = 100.0000 ′ / IN.	CHECKED -	REVISED -					CONTRACT NO. 72A76		
	PLOT DATE = Mar-31-2009 07:49:31AM	DATE -	REVISED -		SCALE: SHEET NO. OF SHEETS STA. TO STA.	FED. ROAD DIST. NO.	ILLINOIS	FED. AID PROJECT		

BENCH MARK DESCRIPTIONS:

BM TJM, #1 : SET A CHSLD " □ " IN TOP OF S.W. ABUT. WING WALL
OF BRIDGE # (063-0007); ON IL 78 1.72 MILES NORTH OF ILLINI ST.
IN CHANDLERVILLE, BRIDGE OVER WOLF LAKE.
NAVD 88 ELEV= 462.64 FT

BM TJM, #2 :SET A " 60 D SPIKE NAIL" IN WEST FACE OF P.P. SET ON EAST
SIDE± IL 78; 1100 SOUTH OF BRIDGE #063-0007 1.32MILES NORTH OF ILLINI ST.
IN CHANDLERVILLE.
NAVD 88 ELEV= 456.29 FT

BM TJM, #3 :SET A " 60 D SPIKE NAIL" IN WEST FACE OF P.P. SET ON EAST
± SIDE IL 78; NORTH OF NORTH LEVEE OF SANGAMON 1.14 MILES NORTH
OF ILLINI ST. IN CHANDLERVILLE.
NAVD 88 ELEV= 457.05 FT

BM TJM, #4 : SET A CHSLD " □ " IN TOP OF N.W. ABUT. WING WALL
OF BRIDGE # (063-0006); ON IL 78 0.47 MILES NORTH OF ILLINI ST.
IN CHANDLERVILLE, BRIDGE OVER SNAGAMON RIVER OVERFLOW.
NAVD 88 ELEV= 464.94 FT

BM TJM, #5 : SET A " 60 D SPIKENAIL " IN WEST FACE OF P.P. SET ON EAST SIDEOF IL 78; 1100 SOUTH
OF BRIDGE # (063-0006); 0.16 MILES NORTH OF ILLINI ST. IN CHANDLERVILLE.
NAVD 88 ELEV= 453.58 FT

D-96-506-07

FILE NAME = c:\pw_work\PWIDOT\LAUGHLINRL\d0134498\sntxtsea.dgn	USER NAME = laughlinrl	DESIGNED -	REVISED -	STATE OF ILLINOIS DEPARTMENT OF TRANSPORTATION	VERTICAL CONTROL BENCHMARKS	F.A.P RTE.	SECTION	COUNTY	TOTAL SHEETS	SHEET NO.
		DRAWN -	REVISED -			614	144(B-1, B-2)	CASS, MASON	351	28
	PLOT SCALE = 100.0000 ' / IN.	CHECKED -	REVISED -					CONTRACT NO. 72A76		
	PLOT DATE = Mar-31-2009 07:49:33AM	DATE -	REVISED -		SCALE: SHEET NO. OF SHEETS STA. TO STA.	FED. ROAD DIST. NO.	ILLINOIS	FED. AID PROJECT		

LEGEND

- WORK AREA
- SIGN
- TYPE III BARRICADE
- DRUM WITH STEADY BURNING LIGHT
- TRAFFIC SIGNAL
- TYPE C BIDIRECTIONAL REFLECTOR
- TEMPORARY CONCRETE BARRIER (STD 704001)
- IMPACT ATTENUATOR
- STEADY BURNING LIGHTS AND DOUBLE VERTICAL PANELS
- DOUBLE VERTICAL PANEL

TEMPORARY SIGNAL PHASE DIAGRAM

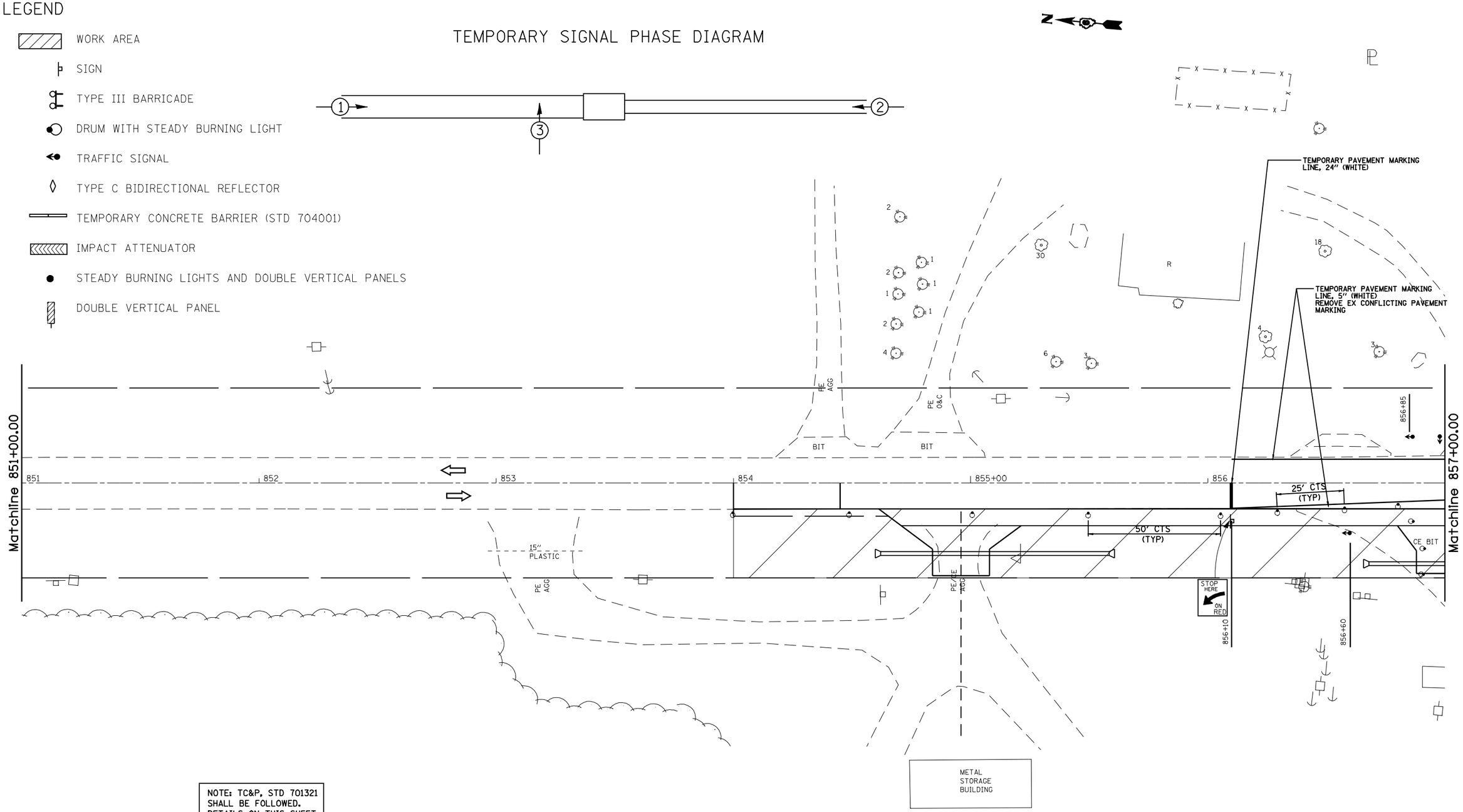

NOTE: TC&P, STD 701321 SHALL BE FOLLOWED. DETAILS ON THIS SHEET SHOWS EXACT LOCATION OF THOSE ITEMS AND MODIFIES THE STANDARD DETAILS TO FIT JOB CONDITIONS

FILE NAME = c:\pw_work\PWIDOT\LAUGHLINRL\d0134498\planstage1.dgn	USER NAME = laughlinrl	DESIGNED -	REVISED -	STATE OF ILLINOIS DEPARTMENT OF TRANSPORTATION	TRAFFIC CONTROL DETAILS (STAGE 1) AT WOLF LAKE	F.A.P RTE.	SECTION	COUNTY	TOTAL SHEETS / SHEET NO.
	PLOT SCALE = 40.0000 ' / IN.	DRAWN -	REVISED -			614	144(B-1,B-2)	CASS, MASON	351 / 29
	PLOT DATE = Mar-31-2009 07:49:37AM	CHECKED -	REVISED -					CONTRACT NO. 72A76	
		DATE -	REVISED -		SCALE: SHEET NO. OF SHEETS STA. 851+00 TO STA. 857+00	FED. ROAD DIST. NO.	ILLINOIS	FED. AID PROJECT	

PRE-STAGE 1 CONSTRUCTION:

1. INSTALL ALL NECESSARY ITEMS IN ACCORDANCE WITH TRAFFIC CONTROL AND PROTECTION STANDARD 701326 TO CONSTRUCT WIDENING.
2. CONSTRUCT HOT-MIX ASPHALT BASE COURSE WIDENING LEFT OF CENTERLINE.
3. INSTALL TEMPORARY TRAFFIC SIGNALS, TEMPORARY CONCRETE BARRIER, AND OTHER TRAFFIC CONTROL IN ACCORDANCE WITH STANDARD 701321 AND STAGE 1 TRAFFIC DETAILS.

STAGE 1 CONSTRUCTION @ WOLF LAKE:

1. SHIFT TRAFFIC TO LEFT (NORTHBOUND) LANE.
2. REMOVE EXISTING GUARDRAIL, BRIDGE RAILS, DECK BEAMS, TOP PORTIONS OF ABUTMENTS AND PIERS, AND PAVEMENT (AS NECESSARY) RIGHT OF CENTERLINE.
3. INSTALL STAGE I STRUCTURE AND ROADWAY ITEMS, RIGHT OF CENTERLINE.
4. INSTALL STEEL PLATE BEAM GUARDRAIL AND TERMINAL SECTIONS, RIGHT OF CENTERLINE.

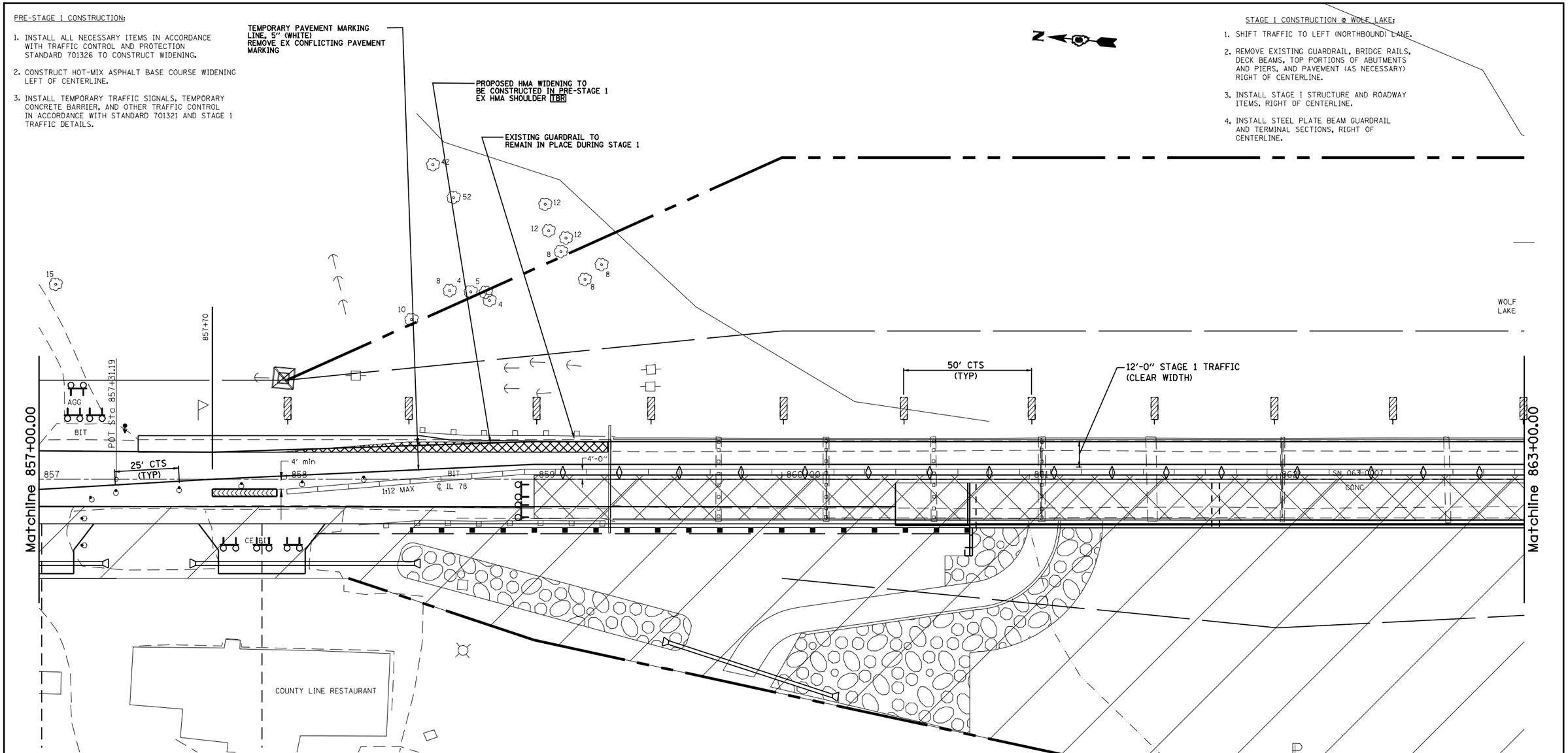

LEGEND

- WORK AREA
- SIGN
- TYPE III BARRICADE
- DRUM WITH STEADY BURNING LIGHT
- TRAFFIC SIGNAL
- TYPE C BIDIRECTIONAL REFLECTOR
- TEMPORARY CONCRETE BARRIER (STD 704001)
- IMPACT ATTENUATOR
- STEADY BURNING LIGHTS AND DOUBLE VERTICAL PANELS
- DOUBLE VERTICAL PANEL

NOTE: TC&P, STD 701321 SHALL BE FOLLOWED. DETAILS ON THIS SHEET SHOWS EXACT LOCATION OF THOSE ITEMS AND MODIFIES THE STANDARD DETAILS TO FIT JOB CONDITIONS

TEMPORARY SIGNAL PHASE DIAGRAM

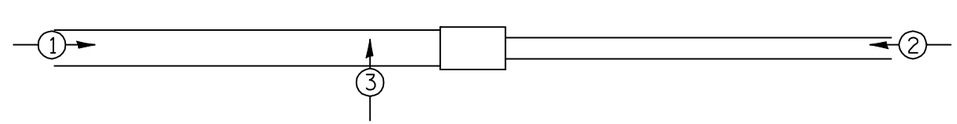

FILE NAME = c:\pw_work\PWIDOT\LAUGHLINRL\d0134498\planstage1.dgn	USER NAME = laughlinrl	DESIGNED -	REVISED -	STATE OF ILLINOIS DEPARTMENT OF TRANSPORTATION	TRAFFIC CONTROL DETAILS (STAGE 1) AT WOLF LAKE	F.A.P RTE.	SECTION	COUNTY	TOTAL SHEETS	SHEET NO.
	PLOT SCALE = 40.0000 ' / IN.	DRAWN -	REVISED -			614	144(B-1,B-2)	CASS, MASON	351	30
	PLOT DATE = Mar-31-2009 07:49:40AM	CHECKED -	REVISED -					CONTRACT NO. 72A76		
		DATE -	REVISED -		SCALE: SHEET NO. OF SHEETS STA. 857+00 TO STA. 863+00	FED. ROAD DIST. NO.	ILLINOIS	FED. AID PROJECT		

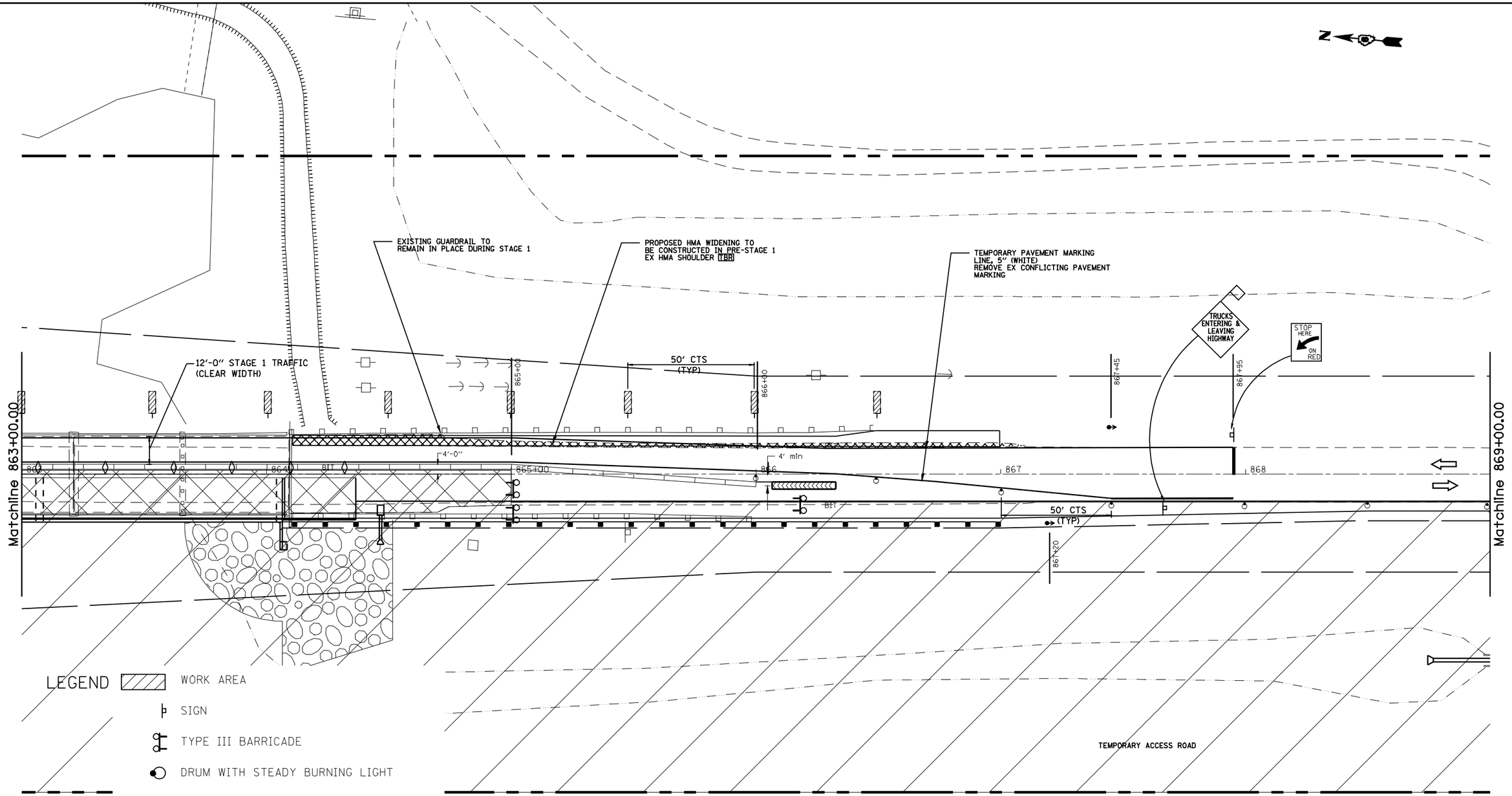

LEGEND

- WORK AREA
- SIGN
- TYPE III BARRICADE
- DRUM WITH STEADY BURNING LIGHT
- TRAFFIC SIGNAL
- TYPE C BIDIRECTIONAL REFLECTOR
- TEMPORARY CONCRETE BARRIER (STD 704001)
- IMPACT ATTENUATOR
- STEADY BURNING LIGHTS AND DOUBLE VERTICAL PANELS
- DOUBLE VERTICAL PANEL

NOTE: TC&P, STD 701321 SHALL BE FOLLOWED. DETAILS ON THIS SHEET SHOWS EXACT LOCATION OF THOSE ITEMS AND MODIFIES THE STANDARD DETAILS TO FIT JOB CONDITIONS

TEMPORARY SIGNAL PHASE DIAGRAM

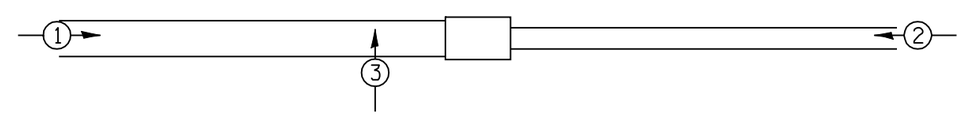

FILE NAME = c:\pw_work\PWIDOT\LAUGHLINRL\d0134498\planstage1.dgn	USER NAME = laughlinrl	DESIGNED -	REVISED -	STATE OF ILLINOIS DEPARTMENT OF TRANSPORTATION	TRAFFIC CONTROL DETAILS (STAGE 1) AT WOLF LAKE	F.A.P RTE.	SECTION	COUNTY	TOTAL SHEETS / SHEET NO.
	PLOT SCALE = 40.0000 ' / IN.	DRAWN -	REVISED -			614	144(B-1,B-2)	CASS, MASON	351 / 31
	PLOT DATE = Mar-31-2009 07:49:43AM	CHECKED -	REVISED -					CONTRACT NO. 72A76	
		DATE -	REVISED -		SCALE: SHEET NO. OF SHEETS STA. 863+00 TO STA. 869+00	FED. ROAD DIST. NO.	ILLINOIS	FED. AID PROJECT	

LEGEND

- WORK AREA
- SIGN
- TYPE III BARRICADE
- DRUM WITH STEADY BURNING LIGHT
- TRAFFIC SIGNAL
- TYPE C BIDIRECTIONAL REFLECTOR
- TEMPORARY CONCRETE BARRIER (STD 704001)
- IMPACT ATTENUATOR
- STEADY BURNING LIGHTS AND DOUBLE VERTICAL PANELS
- DOUBLE VERTICAL PANEL

NOTE: TC&P, STD 701321 SHALL BE FOLLOWED. DETAILS ON THIS SHEET SHOWS EXACT LOCATION OF THOSE ITEMS AND MODIFIES THE STANDARD DETAILS TO FIT JOB CONDITIONS

TEMPORARY SIGNAL PHASE DIAGRAM

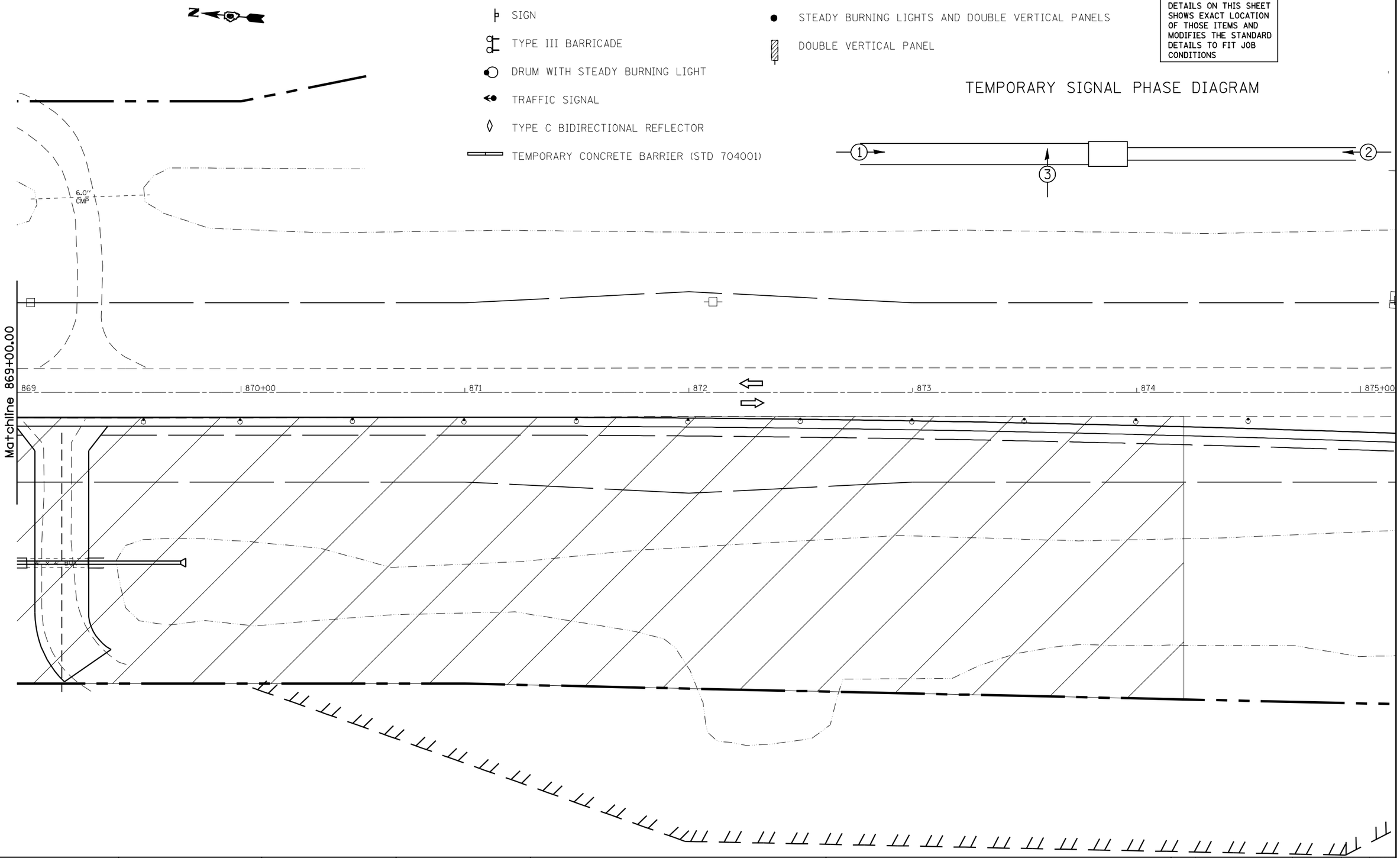

FILE NAME = c:\pw_work\PWIDOT\LAUGHLINRL\d0134498\planstage1.dgn	USER NAME = laughlinrl	DESIGNED -	REVISED -	STATE OF ILLINOIS DEPARTMENT OF TRANSPORTATION	TRAFFIC CONTROL DETAILS (STAGE 1) AT WOLF LAKE			F.A. RTE.	SECTION	COUNTY	TOTAL SHEETS	SHEET NO.
		DRAWN -	REVISED -					614	144(B-1,B-2)	CASS, MASON	351	32
	PLOT SCALE = 40.0000 ' / IN.	CHECKED -	REVISED -							CONTRACT NO. 72A76		
	PLOT DATE = Mar-31-2009 07:49:46AM	DATE -	REVISED -		SCALE:	SHEET NO. OF SHEETS	STA. 869+00 TO STA. 875+00	FED. ROAD DIST. NO.	ILLINOIS	FED. AID PROJECT		

LEGEND

- WORK AREA
- SIGN
- TYPE III BARRICADE
- DRUM WITH STEADY BURNING LIGHT
- TRAFFIC SIGNAL
- TYPE C BIDIRECTIONAL REFLECTOR
- TEMPORARY CONCRETE BARRIER (STD 704001)
- IMPACT ATTENUATOR
- STEADY BURNING LIGHTS AND DOUBLE VERTICAL PANELS
- DOUBLE VERTICAL PANEL

TEMPORARY SIGNAL PHASE DIAGRAM

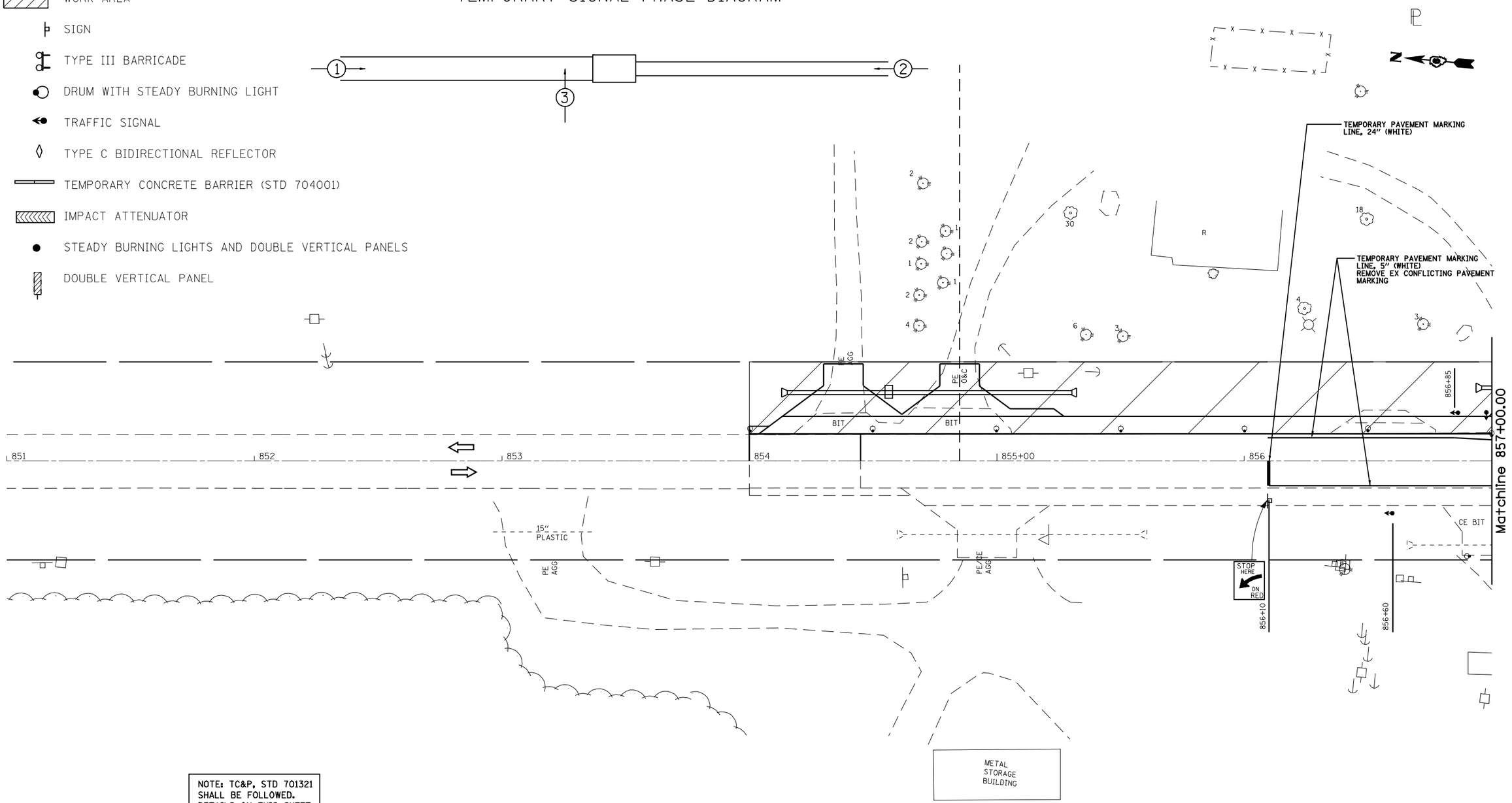

NOTE: TC&P, STD 701321 SHALL BE FOLLOWED. DETAILS ON THIS SHEET SHOWS EXACT LOCATION OF THOSE ITEMS AND MODIFIES THE STANDARD DETAILS TO FIT JOB CONDITIONS

FILE NAME = c:\pw_work\PWIDOT\LAUGHLINRL\d0134498\planstage2.dgn	USER NAME = laughlinrl	DESIGNED -	REVISED -	STATE OF ILLINOIS DEPARTMENT OF TRANSPORTATION	TRAFFIC CONTROL DETAILS (STAGE 2) AT WOLF LAKE	F.A.P RTE.	SECTION	COUNTY	TOTAL SHEETS	SHEET NO.
	PLOT SCALE = 40.0000 ' / IN.	CHECKED -	REVISED -			614	144(B-1,B-2)	CASS, MASON	351	33
	PLOT DATE = Mar-31-2009 07:49:49AM	DATE -	REVISED -		SCALE: SHEET NO. OF SHEETS STA. 851+00 TO STA. 857+00	CONTRACT NO. 72A76				
						FED. ROAD DIST. NO.	ILLINOIS	FED. AID PROJECT		

STAGE 2 CONSTRUCTION @ WOLF LAKE:

1. RELOCATE TEMPORARY CONCRETE BARRIER AND OTHER TRAFFIC CONTROL ITEMS IN ACCORDANCE WITH STANDARD 701321 AND STAGE 2 TRAFFIC CONTROL DETAILS
2. SHIFT TRAFFIC TO RIGHT (SOUTHBOUND) LANE
3. REMOVE EXISTING GUARDRAIL, BRIDGE RAILS, DECK BEAMS, TOP PORTION OF ABUTMENTS AND PIERS, AND PAVEMENT (AS NECESSARY) LEFT OF CENTERLINE
4. INSTALL STAGE II ROADWAY AND STRUCTURE ITEMS, LEFT OF CENTERLINE.
5. INSTALL STEEL PLATE BEAM GUARDRAIL AND TERMINAL SECTIONS, LEFT OF CENTERLINE
6. REMOVE TRAFFIC CONTROL ITEM ASSOCIATED WITH STANDARD 701321 AND RESTORE TWO-LANE, TWO-WAY TRAFFIC

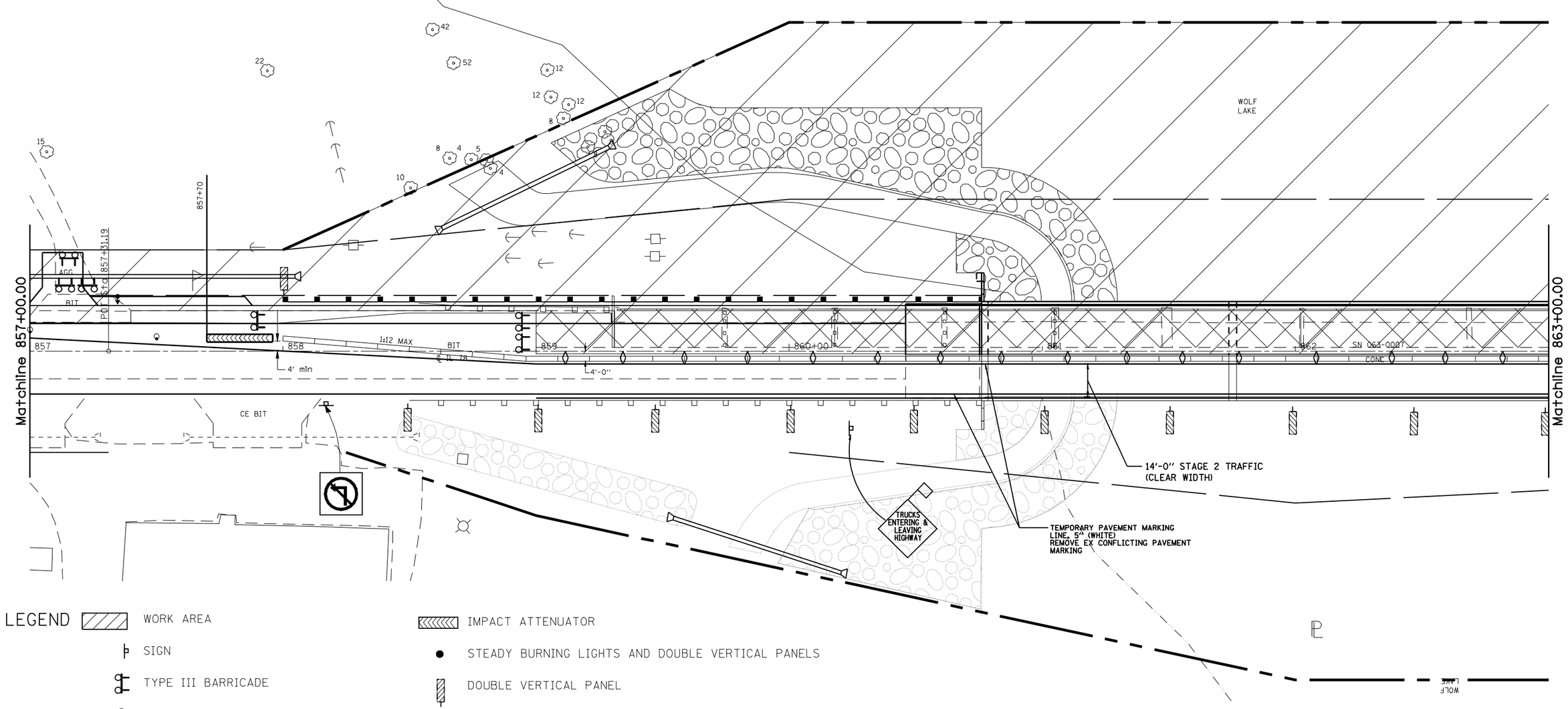

LEGEND

- WORK AREA
- SIGN
- TYPE III BARRICADE
- DRUM WITH STEADY BURNING LIGHT
- TRAFFIC SIGNAL
- TYPE C BIDIRECTIONAL REFLECTOR
- TEMPORARY CONCRETE BARRIER (STD 704001)
- IMPACT ATTENUATOR
- STEADY BURNING LIGHTS AND DOUBLE VERTICAL PANELS
- DOUBLE VERTICAL PANEL

TEMPORARY SIGNAL PHASE DIAGRAM

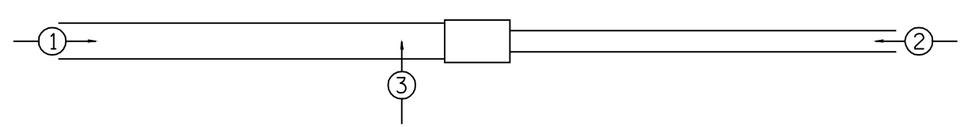

NOTE: TC&P, STD 701321 SHALL BE FOLLOWED. DETAILS ON THIS SHEET SHOWS EXACT LOCATION OF THOSE ITEMS AND MODIFIES THE STANDARD DETAILS TO FIT JOB CONDITIONS

FILE NAME = c:\pw_work\PWIDOT\LAUGHLINRL\d0134498\planstage2.dgn	USER NAME = laughlinrl	DESIGNED -	REVISED -
		DRAWN -	REVISED -
	PLOT SCALE = 40.0000 ' / IN.	CHECKED -	REVISED -
	PLOT DATE = Mar-31-2009 07:49:52AM	DATE -	REVISED -

STATE OF ILLINOIS
DEPARTMENT OF TRANSPORTATION

TRAFFIC CONTROL DETAILS (STAGE 2)
AT WOLF LAKE

SCALE: | SHEET NO. OF SHEETS | STA. 857+00 TO STA. 863+00

F.A.P RTE.	SECTION	COUNTY	TOTAL SHEETS	SHEET NO.
614	144(B-1,B-2)	CASS, MASON	351	34
		CONTRACT NO. 72A76		

FED. ROAD DIST. NO. | ILLINOIS | FED. AID PROJECT

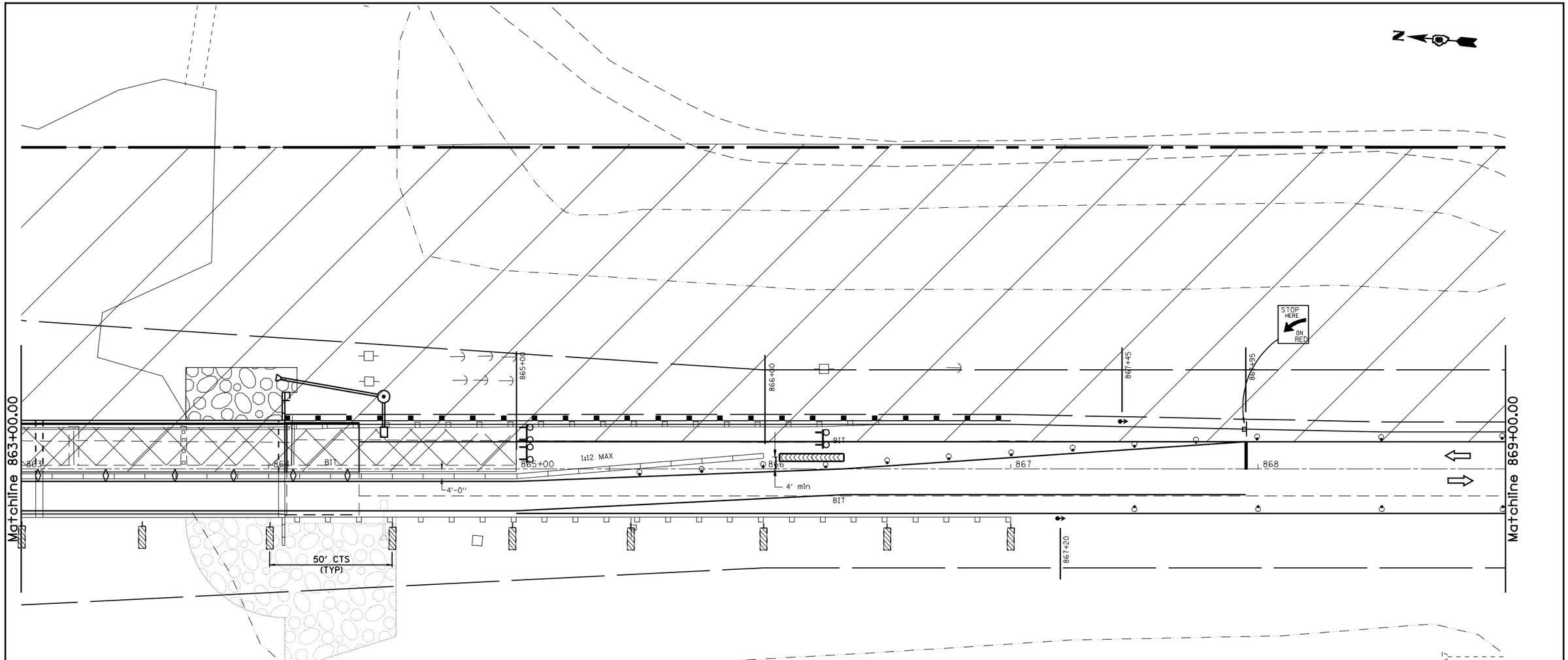

LEGEND

- WORK AREA
- SIGN
- TYPE III BARRICADE
- DRUM WITH STEADY BURNING LIGHT
- TRAFFIC SIGNAL
- TYPE C BIDIRECTIONAL REFLECTOR
- TEMPORARY CONCRETE BARRIER (STD 704001)
- IMPACT ATTENUATOR
- STEADY BURNING LIGHTS AND DOUBLE VERTICAL PANELS
- DOUBLE VERTICAL PANEL

NOTE: TC&P, STD 701321 SHALL BE FOLLOWED. DETAILS ON THIS SHEET SHOWS EXACT LOCATION OF THOSE ITEMS AND MODIFIES THE STANDARD DETAILS TO FIT JOB CONDITIONS

TEMPORARY SIGNAL PHASE DIAGRAM

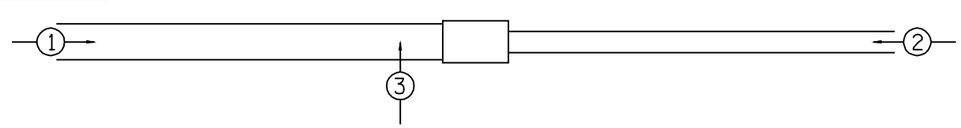

FILE NAME = c:\pw_work\PWIDOT\LAUGHLINRL\d0134498\planstage2.dgn	USER NAME = laughlinrl	DESIGNED -	REVISED -	STATE OF ILLINOIS DEPARTMENT OF TRANSPORTATION	TRAFFIC CONTROL DETAILS (STAGE 2) AT WOLF LAKE	F.A.P RTE.	SECTION	COUNTY	TOTAL SHEETS / SHEET NO.
	PLOT SCALE = 40.0000 ' / IN.	DRAWN -	REVISED -			614	144(B-1,B-2)	CASS, MASON	351 / 35
	PLOT DATE = Mar-31-2009 07:49:56AM	CHECKED -	REVISED -					CONTRACT NO. 72A76	
		DATE -	REVISED -		SCALE: SHEET NO. OF SHEETS STA. 863+00 TO STA. 869+00	FED. ROAD DIST. NO.	ILLINOIS	FED. AID PROJECT	

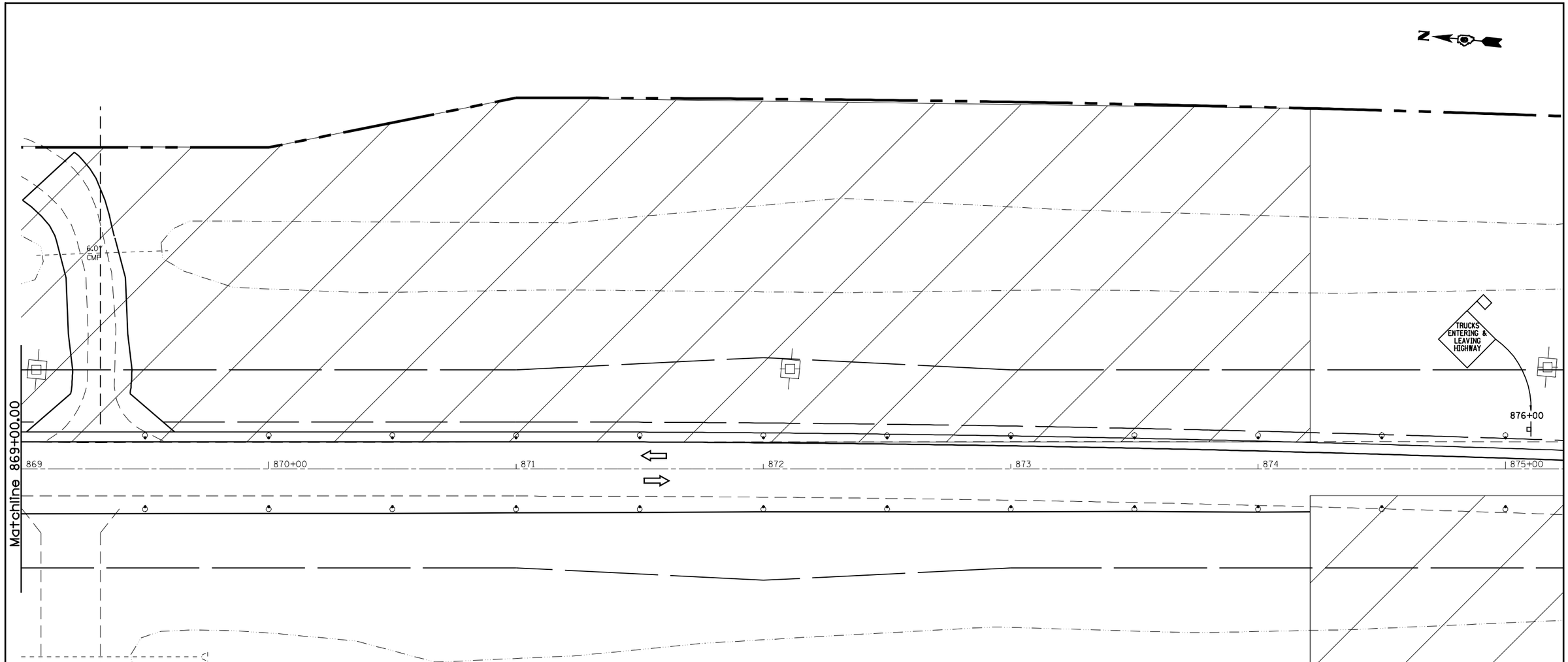

LEGEND

- WORK AREA
- SIGN
- TYPE III BARRICADE
- DRUM WITH STEADY BURNING LIGHT
- TRAFFIC SIGNAL
- TYPE C BIDIRECTIONAL REFLECTOR
- TEMPORARY CONCRETE BARRIER (STD 704001)
- IMPACT ATTENUATOR
- STEADY BURNING LIGHTS AND DOUBLE VERTICAL PANELS
- DOUBLE VERTICAL PANEL

NOTE: TC&P, STD 701321 SHALL BE FOLLOWED. DETAILS ON THIS SHEET SHOWS EXACT LOCATION OF THOSE ITEMS AND MODIFIES THE STANDARD DETAILS TO FIT JOB CONDITIONS

TEMPORARY SIGNAL PHASE DIAGRAM

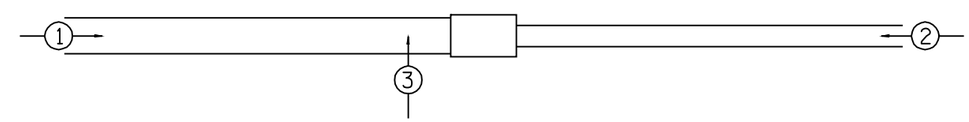

FILE NAME = c:\pw_work\PWIDOT\LAUGHLINRL\d0134498\planstage2.dgn	USER NAME = laughlinrl	DESIGNED -	REVISED -	STATE OF ILLINOIS DEPARTMENT OF TRANSPORTATION	TRAFFIC CONTROL DETAILS (STAGE 2) AT WOLF LAKE	F.A.P RTE.	SECTION	COUNTY	TOTAL SHEETS	SHEET NO.
	PLOT SCALE = 40.0000 ' / IN.	DRAWN -	REVISED -			614	144(B-1,B-2)	CASS, MASON	351	36
	PLOT DATE = Mar-31-2009 07:49:59AM	CHECKED -	REVISED -					CONTRACT NO. 72A76		
		DATE -	REVISED -		SCALE: SHEET NO. OF SHEETS STA. 869+00 TO STA. 875+00	FED. ROAD DIST. NO.	ILLINOIS	FED. AID PROJECT		

NORTHERN AGRICULTURE, LLC
PARCEL NO. 6426122 A, B, C, TE1 & TE2

NORTHERN AGRICULTURE, LLC
PARCEL NO. 6246122 A, B, C, TE1 & TE2

SCALE IN FEET: 50 0 25 50 100

SEQUENCE OF CONSTRUCTION

AFTER STAGE I AND II AT WOLF LAKE ARE COMPLETE, CONSTRUCT WIDENING FOR THE SOUTH PAVEMENT CONNECTOR UNDER TCP STANDARD 701326.

SET UP TRAFFIC CONTROL UNDER STANDARD 701006 TO CONSTRUCT THE REALIGNED PAVEMENT, WHILE MAINTAINING 2-WAY TRAFFIC ON THE EXISTING PAVEMENT.

CONSTRUCT PROPOSED SN 009-0510 ON NEW ALIGNMENT.

CONSTRUCT LT PART OF BOAT ACCESS FOR PRIMARY BOAT RAMP AND TEMPORARY ACCESS ROAD AS SHOWN. ALSO CONSTRUCT TEMPORARY ACCESS ROAD UNDER SN 009-0510 FROM BOAT RAMP ACCESS AREA.

INSTALL TEMPORARY DRAINAGE AND ACCESS AS SHOWN. RECONSTRUCT ENTRANCES ON NEW ALIGNMENT.

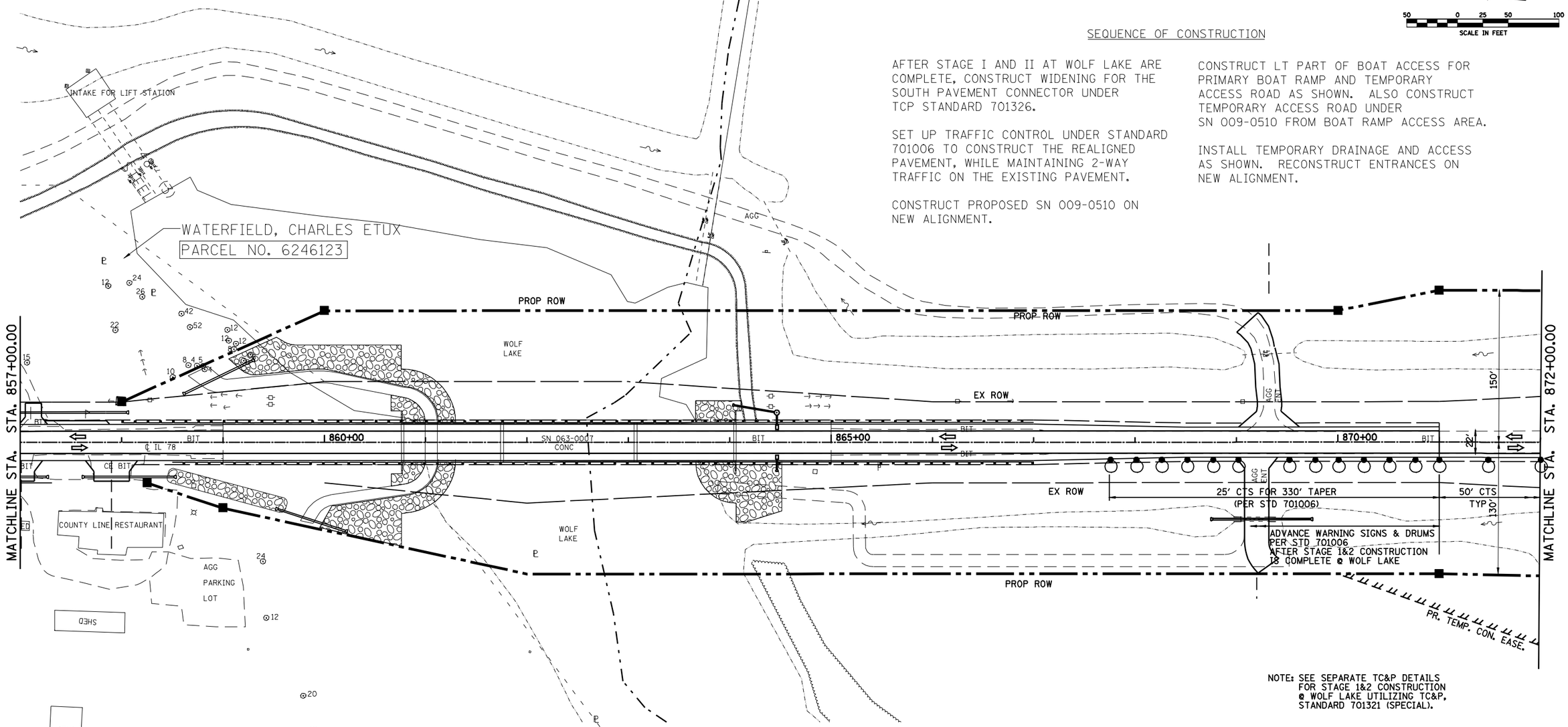

NOTE: SEE SEPARATE TC&P DETAILS FOR STAGE 1&2 CONSTRUCTION @ WOLF LAKE UTILIZING TC&P, STANDARD 701321 (SPECIAL).

LEGEND

- WORK AREA
- SIGN
- TYPE III BARRICADE
- DRUM WITH STEADY BURNING LIGHT
- TRAFFIC SIGNAL
- TYPE C BIDIRECTIONAL REFLECTOR
- TEMPORARY CONCRETE BARRIER (STD 704001)
- IMPACT ATTENUATOR
- STEADY BURNING LIGHTS AND DOUBLE VERTICAL PANELS
- DOUBLE VERTICAL PANEL

MICHAEL G BUTLER
PARCEL NO. 6246124
& 6246124TE

NORTHERN AGRICULTURE, LLC
PARCEL NO. 6246122 A, B, C, TE1 & TE2

FILE NAME = c:\pw_work\PWIDOT\LAUGHLINRL\d0134498\planstage1&2south.dgn	USER NAME = laughlinrl	DESIGNED -	REVISED -
		DRAWN -	REVISED -
	PLOT SCALE = 100.0000 ' / IN.	CHECKED -	REVISED -
	PLOT DATE = Mar-31-2009 07:50:03AM	DATE -	REVISED -

STATE OF ILLINOIS
DEPARTMENT OF TRANSPORTATION

TRAFFIC CONTROL DETAILS
(STAGE 1 & 2 SOUTH)

SCALE: | SHEET NO. OF SHEETS | STA. 857+00 TO STA. 872+00

F.A.P RTE.	SECTION	COUNTY	TOTAL SHEETS	SHEET NO.
614	144(B-1,B-2)	CASS, MASON	351	37
		CONTRACT NO. 72A76		

FED. ROAD DIST. NO. | ILLINOIS | FED. AID PROJECT

ADDITIONAL NOTES FOR CONSTRUCTION OF THE RIVER BRIDGE AND CULVERT

REMOVE SOUTHBOUND PORTION OF EXISTING STRUCTURE 009-0006 PRIOR TO PLACING ANY FILL.

REMOVE SOIL TO 2 FT BELOW EXISTING GROUND AROUND PILE SUPPORTING NORTHBOUND LANES AND REPLACE WITH LOOSE SAND. PLACE FILL, INCLUDING SAND AROUND NORTHBOUND PILES, TO 2 FT ABOVE EXISTING GROUND AS SHOWN ON THE DETAILS FOR BIG LAKE FILL ON SHEET 104 AND AS DESCRIBED IN THE SPECIAL PROVISION FOR STAGED FILL CONSTRUCTION.

CONSTRUCT PROPOSED EMBANKMENT WITH TEMPORARY 1.5H:1V EAST SLOPE, INCLUDING 8 FT UNRESTRICTED SOIL CAP AS SHOWN ON THE DETAILS ON SHEET 104.

STAGED CONSTRUCTION OF THE CULVERT (SN 009-2509) SHALL NOT BE ALLOWED. SEE THE DETAIL FOR STAGE I FILL AROUND THE CULVERT ON SHEET 104.

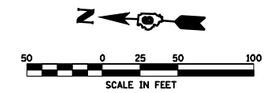

NORTHERN AGRICULTURE, LLC
PARCEL NO. 6246122 A, B, C, TE1 & TE2

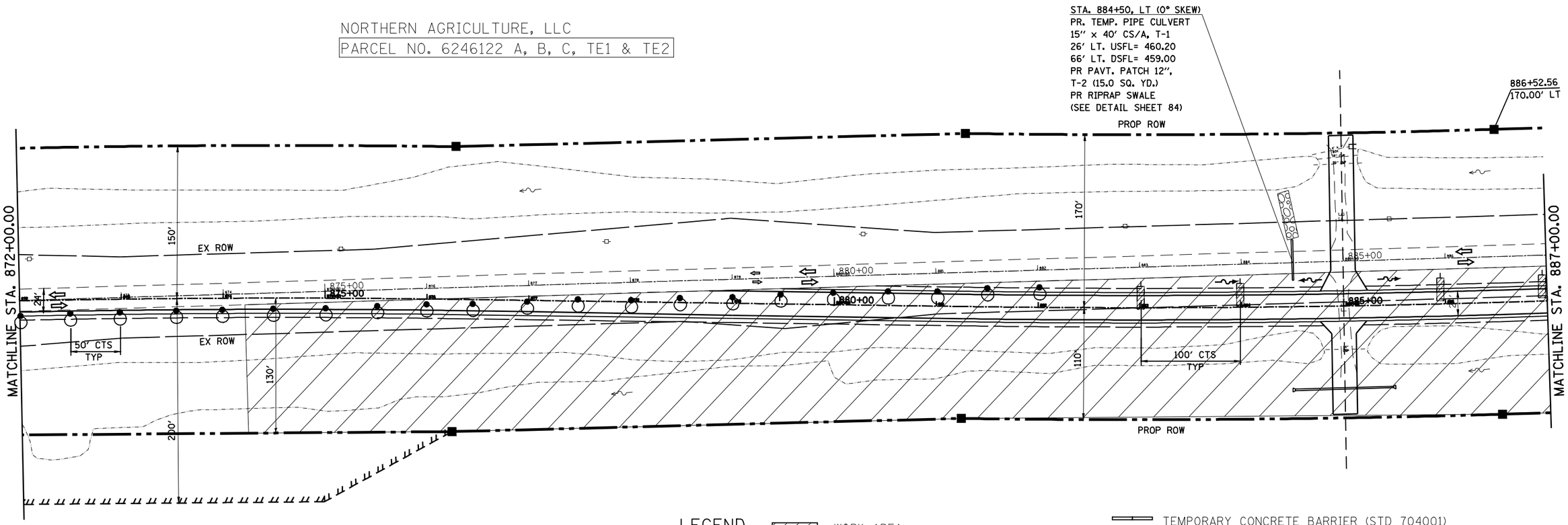

LEGEND

- WORK AREA
- SIGN
- TYPE III BARRICADE
- DRUM WITH STEADY BURNING LIGHT
- TRAFFIC SIGNAL
- TYPE C BIDIRECTIONAL REFLECTOR
- TEMPORARY CONCRETE BARRIER (STD 704001)
- IMPACT ATTENUATOR
- STEADY BURNING LIGHTS AND DOUBLE VERTICAL PANELS
- DOUBLE VERTICAL PANEL

NORTHERN AGRICULTURE, LLC
PARCEL NO. 6246122 A, B, C, TE1 & TE2

FILE NAME = c:\pw_work\PWIDOT\LAUGHLINRL\d0134498\planstage1&2south.dgn	USER NAME = laughlinrl	DESIGNED -	REVISED -	STATE OF ILLINOIS DEPARTMENT OF TRANSPORTATION	TRAFFIC CONTROL DETAILS (STAGE 1 & 2 SOUTH)	F.A.P RTE.	SECTION	COUNTY	TOTAL SHEETS / SHEET NO.
	PLOT SCALE = 100.0000 ' / IN.	DRAWN -	REVISED -			614	144(B-1,B-2)	CASS, MASON	351 / 38
	PLOT DATE = Mar-31-2009 07:50:07AM	CHECKED -	REVISED -					CONTRACT NO. 72A76	
		DATE -	REVISED -		SCALE: SHEET NO. OF SHEETS STA. 872+00 TO STA. 887+00	FED. ROAD DIST. NO.	ILLINOIS	FED. AID PROJECT	

NORTHERN AGRICULTURE, LLC
PARCEL NO. 6246122 A. B. C. TE1 & TE2

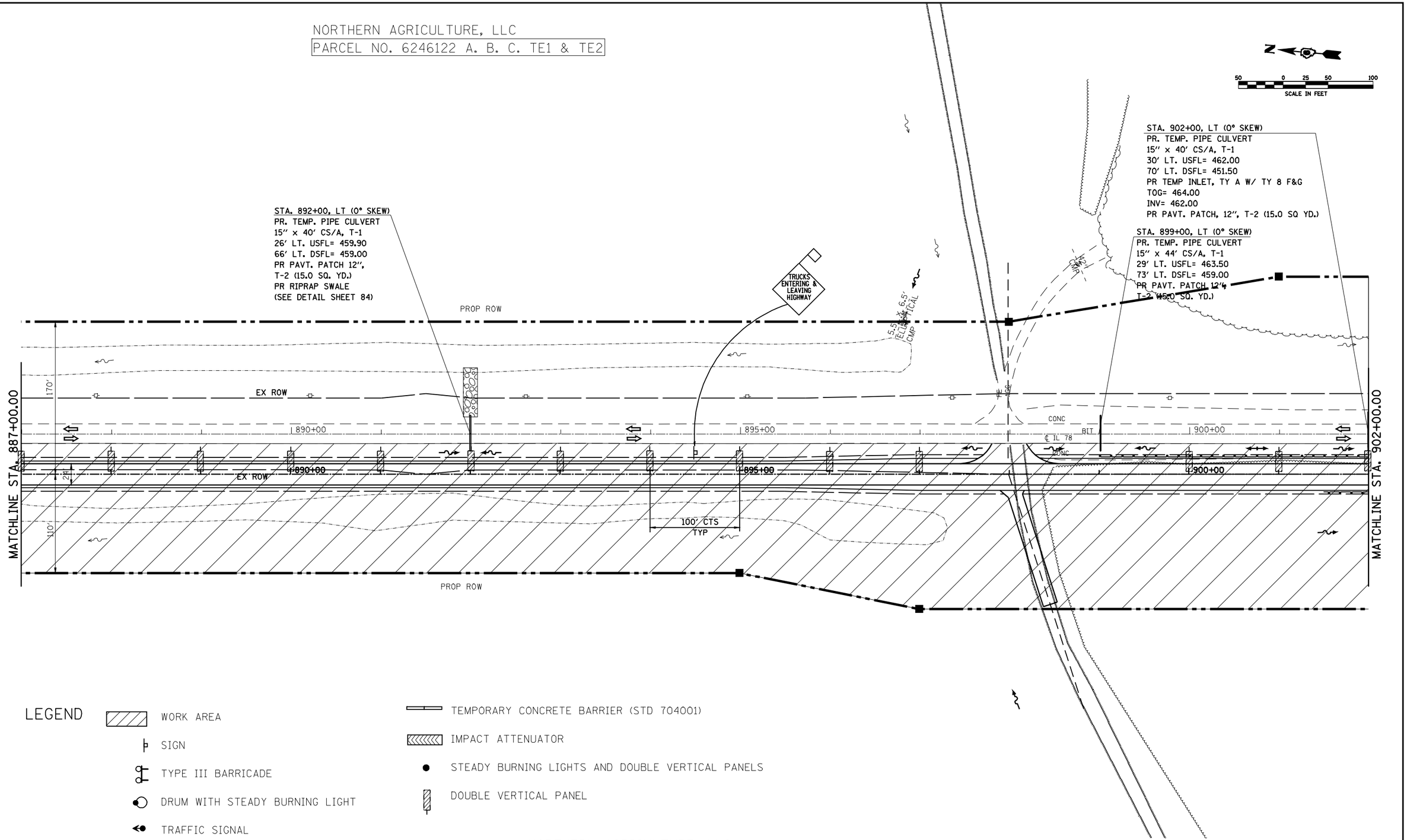

LEGEND

- WORK AREA
- SIGN
- TYPE III BARRICADE
- DRUM WITH STEADY BURNING LIGHT
- TRAFFIC SIGNAL
- TYPE C BIDIRECTIONAL REFLECTOR
- TEMPORARY CONCRETE BARRIER (STD 704001)
- IMPACT ATTENUATOR
- STEADY BURNING LIGHTS AND DOUBLE VERTICAL PANELS
- DOUBLE VERTICAL PANEL

NORTHERN AGRICULTURE, LLC
PARCEL NO. 6246122 A, B, C, TE1 & TE2

FILE NAME = c:\pw_work\PWIDOT\LAUGHLINRL\d0134498\planstage1&2south.dgn	USER NAME = laughlinrl	DESIGNED -	REVISED -
		DRAWN -	REVISED -
	PLOT SCALE = 100.0000 ' / IN.	CHECKED -	REVISED -
	PLOT DATE = Mar-31-2009 07:50:10AM	DATE -	REVISED -

STATE OF ILLINOIS
DEPARTMENT OF TRANSPORTATION

TRAFFIC CONTROL DETAILS
(STAGE 1 & 2 SOUTH)

SCALE: | SHEET NO. OF SHEETS | STA. 887+00 TO STA. 902+00

F.A.P RTE.	SECTION	COUNTY	TOTAL SHEETS	SHEET NO.
614	144(B-1,B-2)	CASS, MASON	351	39
		CONTRACT NO. 72A76		

FED. ROAD DIST. NO. | ILLINOIS | FED. AID PROJECT

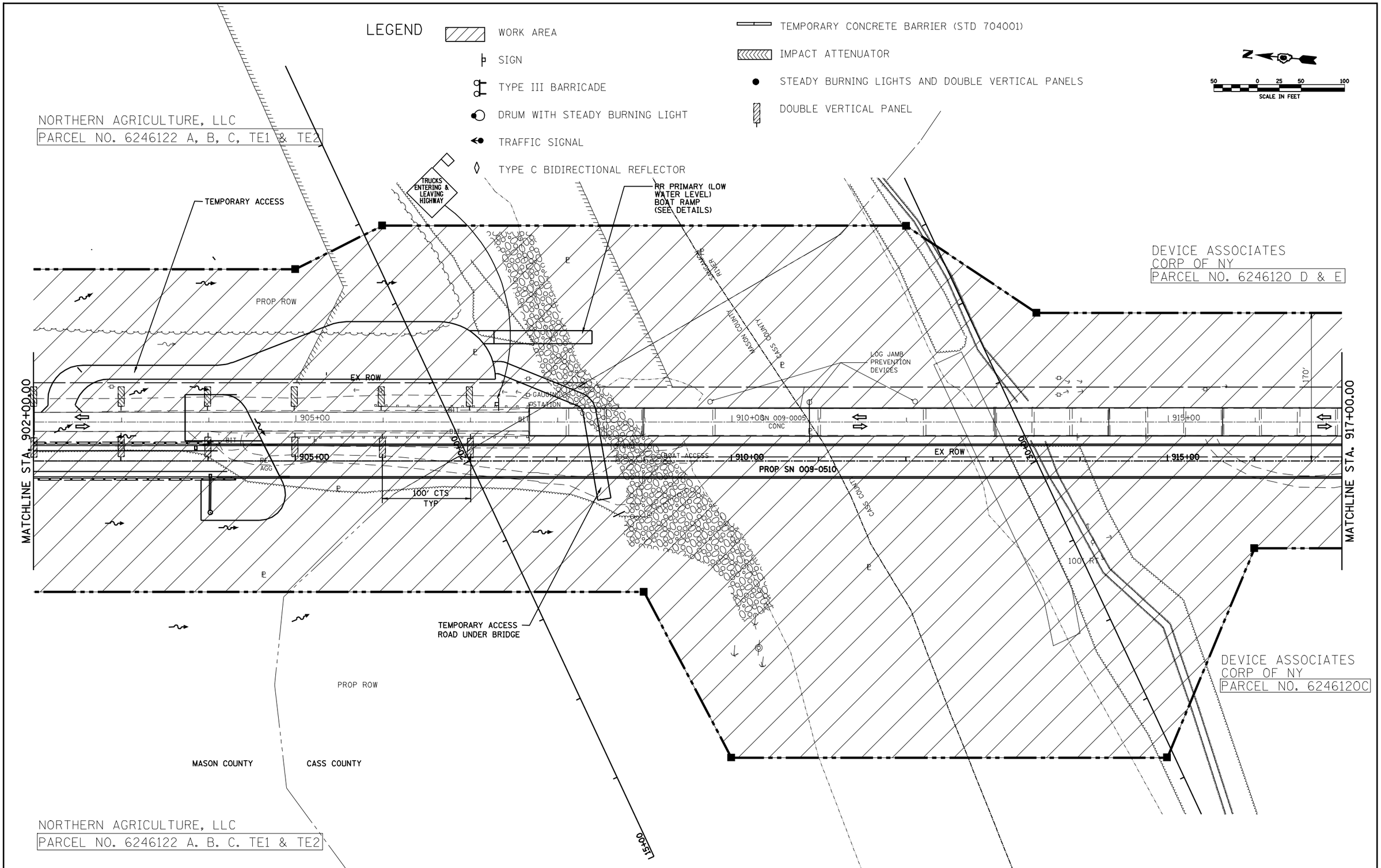

FILE NAME = c:\pw_work\PWIDOT\LAUGHLINRL\d0134498\planstage1&2south.dgn	USER NAME = laughlinrl	DESIGNED -	REVISED -
	PLOT SCALE = 100.0000 ' / IN.	DRAWN -	REVISED -
	PLOT DATE = Mar-31-2009 07:50:14AM	CHECKED -	REVISED -
		DATE -	REVISED -

STATE OF ILLINOIS
DEPARTMENT OF TRANSPORTATION

TRAFFIC CONTROL DETAILS
(STAGE 1 & 2 SOUTH)

SCALE: | SHEET NO. OF SHEETS | STA. 902+00 TO STA. 917+00

F.A.P RTE.	SECTION	COUNTY	TOTAL SHEETS	SHEET NO.
614	144(B-1,B-2)	CASS, MASON	351	40

CONTRACT NO. 72A76

FED. ROAD DIST. NO. | ILLINOIS | FED. AID PROJECT

DEVICE ASSOCIATES
CORP OF NY
PARCEL NO. 6246120 D & E

LEGEND

- WORK AREA
- SIGN
- TYPE III BARRICADE
- DRUM WITH STEADY BURNING LIGHT
- TRAFFIC SIGNAL
- TYPE C BIDIRECTIONAL REFLECTOR
- TEMPORARY CONCRETE BARRIER (STD 704001)
- IMPACT ATTENUATOR
- STEADY BURNING LIGHTS AND DOUBLE VERTICAL PANELS
- DOUBLE VERTICAL PANEL

SCALE IN FEET: 50 0 25 50 100

STA. 927+00, LT (0° SKEW)
PR. TEMP. PIPE CULVERT
15" x 40' CS/A, T-1
30' LT. USFL= 461.90
70' LT. DSFL= 460.00
PR TEMP INLET, TY A W/ TY 8 P&G
TOG= 463.90
INV= 461.90
PR PAVT. PATCH, 12", T-2 (15.0 SQ YD.)

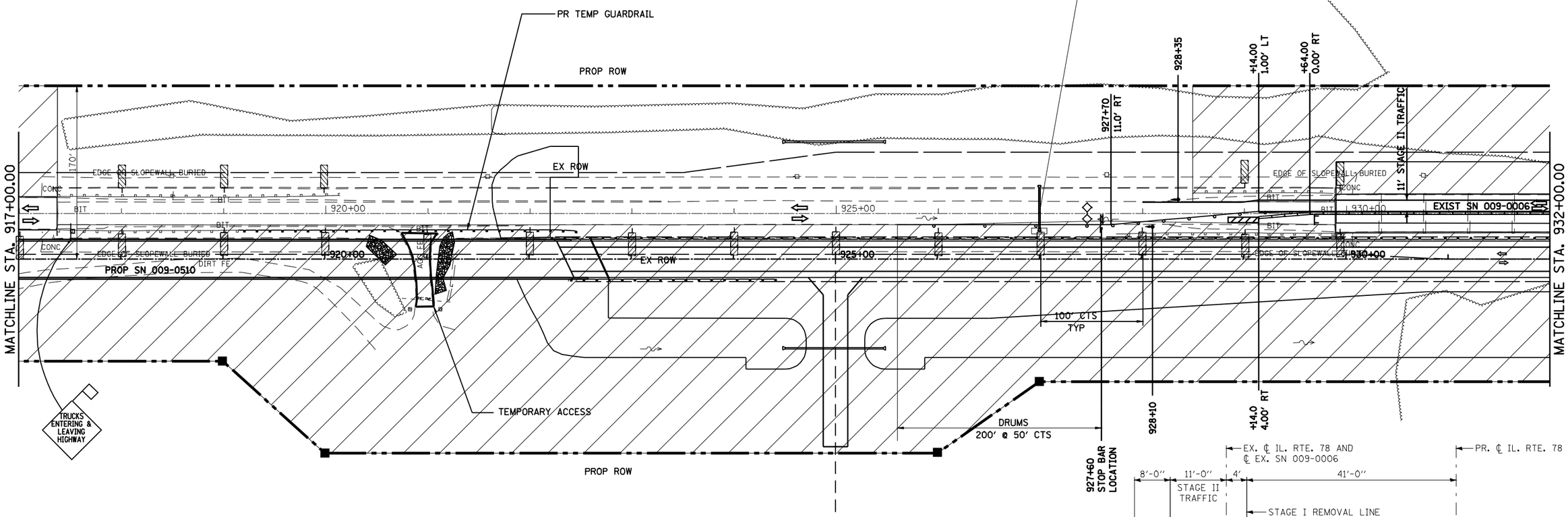

DEVICE ASSOCIATES
CORP OF NY
PARCEL NO. 6246120 C

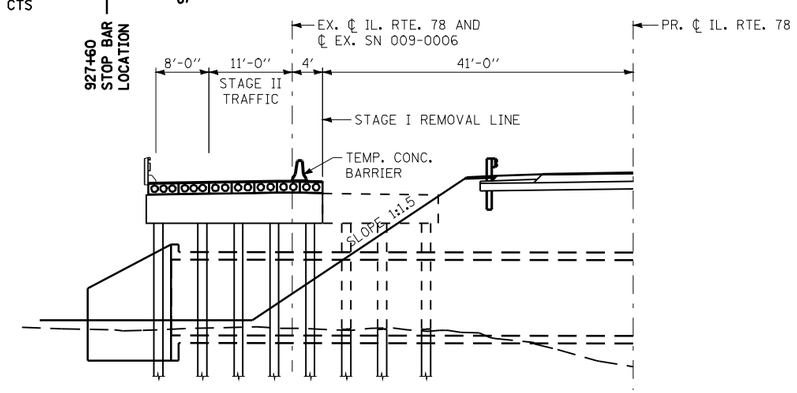

TYPICAL SECTION STAGE 2 TRAFFIC

FILE NAME = c:\pw_work\PWIDOT\LAUGHLINRL\d0134498\planstage1&2south.dgn	USER NAME = laughlinrl	DESIGNED -	REVISED -	STATE OF ILLINOIS DEPARTMENT OF TRANSPORTATION	TRAFFIC CONTROL DETAILS (STAGE 1 & 2 SOUTH)	F.A.P RTE.	SECTION	COUNTY	TOTAL SHEETS / SHEET NO.
		DRAWN -	REVISED -			614	144(B-1,B-2)	CASS, MASON	351 / 41
	PLOT SCALE = 100.0000 ' / IN.	CHECKED -	REVISED -					CONTRACT NO. 72A76	
	PLOT DATE = Mar-31-2009 07:50:18AM	DATE -	REVISED -		SCALE: SHEET NO. OF SHEETS STA. 917+00 TO STA. 932+00	FED. ROAD DIST. NO.	ILLINOIS	FED. AID PROJECT	

DEVICE ASSOCIATES
CORP OF NY
PARCEL NO. 6246120 A & B

VILLAGE OF CHANDLERVILLE
PARCEL NO. 6246119 A & B

N

50 0 25 50 100
SCALE IN FEET

THE EXISTING POND SHOULD BE DRAINED. SEE THE SPECIAL PROVISION FOR PUMP POND DRY. AN ESTIMATED QUANTITY FOR REMOVAL AND DISPOSAL OF UNSUITABLE MATERIAL IS INCLUDED IN THE PLANS.

THE RT TEMPORARY DITCH (SHOWN ON THE PROFILE SHEET 63 AND ON THE CROSS SECTIONS STA 930+00 TO 935+00) SHALL BE MODIFIED SO THAT IT DRAINS INTO THE POND DRAINAGE SUMP. SEE SPECIAL PROVISION FOR TEMPORARY DITCH.

STA. 939+00, LT (0° SKEW)
PR. TEMP. PIPE CULVERT
15" x 40' CS/A, T-1
26' LT. USFL= 461.30
66' LT. DSFL= 460.00
PR TEMP INLET, TY A W/ TY 8 F&G
TOG= 463.30
INV= 461.30
PR PAVT. PATCH, 12", T-2 (15.0 SQ YD.)

+39.00
0.00' LT
936+89
1.0' LT
938+43
938+93
STOP BAR
LOCATION

18" CMP
15" STEEL
36" CMP
EX ROW
1X STAGE II TRAFFIC
CONC
AGG
SN 009-0806
CONC
℄ IL 78
935+
935+
POND
100' CTS
TYP
50' CTS FOR 300' TAPER
PROP ROW
140'
940+00
940+00
945+00
945+00
EX ROW
50' CTS
TYP
80'
100' CTS
TYP
PROP ROW
TRUCKS ENTERING & LEAVING HIGHWAY
MATCHLINE STA. 932+00.00
MATCHLINE STA. 947+00.00
TEMPORARY ACCESS

RICHARD B. AND FREDA BROWN
PARCEL NO. 6246118

REMOVAL AND REPLACEMENT OF WEAK SOILS WITH ROCKFILL FOUNDATION MAY BE REQUIRED BENEATH THE CULVERT. THE ENGINEER WILL DETERMINE THE REQUIRED DEPTH FOLLOWING EXCAVATION TO PLAN GRADE. SEE THE SPECIAL PROVISION FOR ROCKFILL - FOUNDATION.

THE FILL AROUND THE CULVERT SHALL CONSIST OF UNRESTRICTED SOIL. SEE THE DETAIL FOR SECTION THROUGH CULVERT FILL - STA 935+35 ON SHEET 104.

+89.00
4.00' RT
938+18
938+33
11.0' RT

60' TEMPORARY SHEET PILING THE ENGINEER MAY ADJUST THE LOCATION AND QUANTITY OF TEMPORARY SHEET PILING TO MATCH FIELD CONDITIONS. SEE SHEET 85 FOR TEMP. SHEET PILE DETAILS.

DEVICE ASSOCIATES
CORP OF NY
PARCEL NO. 6246120 A & B

LEGEND

- WORK AREA
- SIGN
- TYPE III BARRICADE
- DRUM WITH STEADY BURNING LIGHT
- TRAFFIC SIGNAL
- TYPE C BIDIRECTIONAL REFLECTOR
- TEMPORARY CONCRETE BARRIER (STD 704001)
- IMPACT ATTENUATOR
- STEADY BURNING LIGHTS AND DOUBLE VERTICAL PANELS
- DOUBLE VERTICAL PANEL

FILE NAME = c:\pw_work\PWIDOT\LAUGHLINRL\d0134498\planstage1&2south.dgn	USER NAME = laughlinrl	DESIGNED -	REVISED -
		DRAWN -	REVISED -
	PLOT SCALE = 100.0000 ' / IN.	CHECKED -	REVISED -
	PLOT DATE = Mar-31-2009 07:50:22AM	DATE -	REVISED -

STATE OF ILLINOIS
DEPARTMENT OF TRANSPORTATION

TRAFFIC CONTROL DETAILS
(STAGE 1 & 2 SOUTH)

SCALE: | SHEET NO. OF SHEETS | STA. 932+00 TO STA. 947+00

F.A.P RTE.	SECTION	COUNTY	TOTAL SHEETS	SHEET NO.
614	144(B-1,B-2)	CASS, MASON	351	42

CONTRACT NO. 72A76

FED. ROAD DIST. NO. | ILLINOIS | FED. AID PROJECT

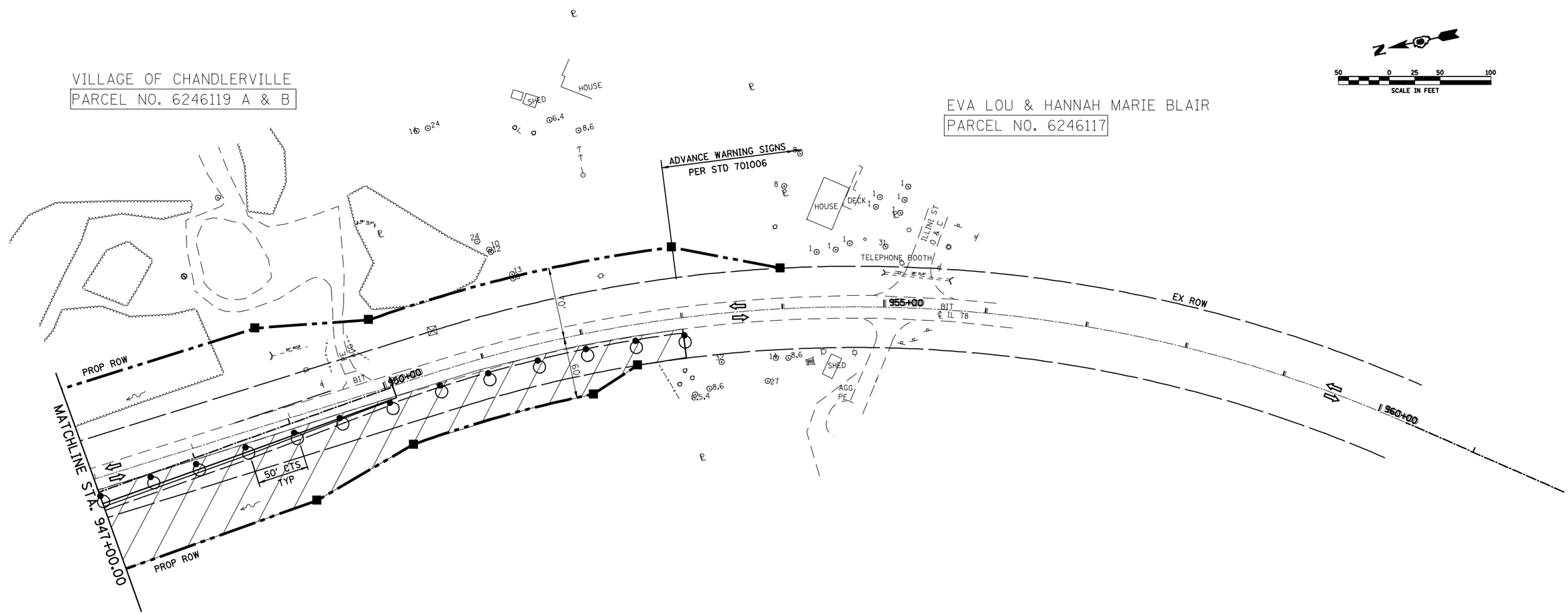

LEGEND

- WORK AREA
- SIGN
- TYPE III BARRICADE
- DRUM WITH STEADY BURNING LIGHT
- TRAFFIC SIGNAL
- TYPE C BIDIRECTIONAL REFLECTOR
- TEMPORARY CONCRETE BARRIER (STD 704001)
- IMPACT ATTENUATOR
- STEADY BURNING LIGHTS AND DOUBLE VERTICAL PANELS
- DOUBLE VERTICAL PANEL

FILE NAME = c:\pw_work\PWIDOT\LAUGHLINRL\d0134498\planstage1&2south.dgn	USER NAME = laughlinrl	DESIGNED -	REVISED -	STATE OF ILLINOIS DEPARTMENT OF TRANSPORTATION	TRAFFIC CONTROL DETAILS (STAGE 1 & 2 SOUTH)	F.A.P RTE.	SECTION	COUNTY	TOTAL SHEETS	SHEET NO.
		DRAWN -	REVISED -			614	144(B-1,B-2)	CASS, MASON	351	43
	PLOT SCALE = 100.0000 ' / IN.	CHECKED -	REVISED -					CONTRACT NO. 72A76		
	PLOT DATE = Mar-31-2009 07:50:27AM	DATE -	REVISED -		SCALE: SHEET NO. OF SHEETS STA. 947+00 TO STA. 955+00	FED. ROAD DIST. NO.	ILLINOIS	FED. AID PROJECT		

STAGE 3 CONSTRUCTION @ WOLF LAKE:

NOTES:

BEFORE BEGINNING THIS STAGE, STAGE 1 & 2 SHALL BE COMPLETE ON THE IL 78 REALIGNMENT SECTION OVER THE SANGAMON RIVER AND TRAFFIC SWITCHED ON TO THE REALIGNMENT. ALSO, ADEQUATE SETTLEMENT TIME SHALL BE ALLOWED, PER SPECIAL PROVISIONS, FOR THE WOLF LAKE ROCKFILL AREA PRIOR TO PLACING FINAL LIFTS OF HMA BINDER AND SURFACE COURSES

1. CONSTRUCT FINAL LIFTS OF HMA BINDER AND SURFACE COURSES, COMPLETE ENTRANCE WORK, PLACE AGGREGATE SHOULDERS, AND COMPLETE FINAL PAVEMENT MARKINGS AND RAISED REFLECTIVE PAVEMENT MARKERS USING APPROPRIATE TRAFFIC CONTROL AND PROTECTION

2. ALSO, COMPLETE REMOVAL OF OLD PAVEMENT AND TEMPORARY DRAINAGE PIPES. DO FINAL DITCH GRADING AND SHAPING, SEEDING, AND OTHER MISCELLANEOUS WORK AS SHOWN IN THE PLANS.

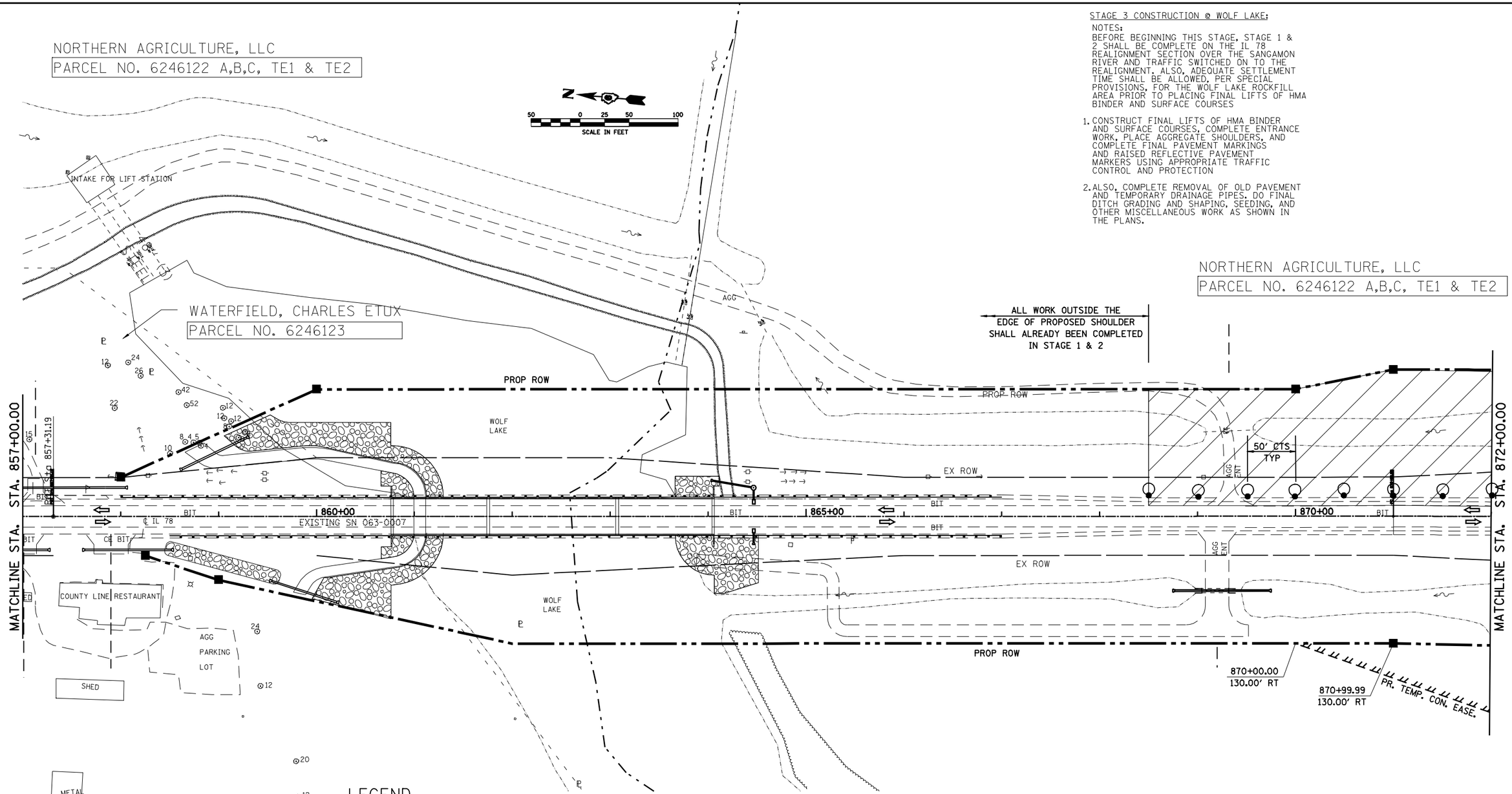

LEGEND

- WORK AREA
- SIGN
- TYPE III BARRICADE
- DRUM WITH STEADY BURNING LIGHT
- TRAFFIC SIGNAL
- TYPE C BIDIRECTIONAL REFLECTOR
- TEMPORARY CONCRETE BARRIER (STD 704001)
- IMPACT ATTENUATOR
- STEADY BURNING LIGHTS AND DOUBLE VERTICAL PANELS
- DOUBLE VERTICAL PANEL

FILE NAME = c:\pw_work\PWIDOT\LAUGHLINRL\d0134498\planstage3south.dgn	USER NAME = laughlinrl	DESIGNED -	REVISED -
		DRAWN -	REVISED -
	PLOT SCALE = 100.0000 ' / IN.	CHECKED -	REVISED -
	PLOT DATE = Mar-31-2009 07:50:30AM	DATE -	REVISED -

STATE OF ILLINOIS
DEPARTMENT OF TRANSPORTATION

TRAFFIC CONTROL DETAILS
(STAGE 3 SOUTH)

SCALE: | SHEET NO. OF SHEETS | STA. 857+00 TO STA. 872+00

F.A.P RTE.	SECTION	COUNTY	TOTAL SHEETS	SHEET NO.
614	144(B-1,B-2)	CASS, MASON	351	44

CONTRACT NO. 72A76

FED. ROAD DIST. NO. | ILLINOIS | FED. AID PROJECT

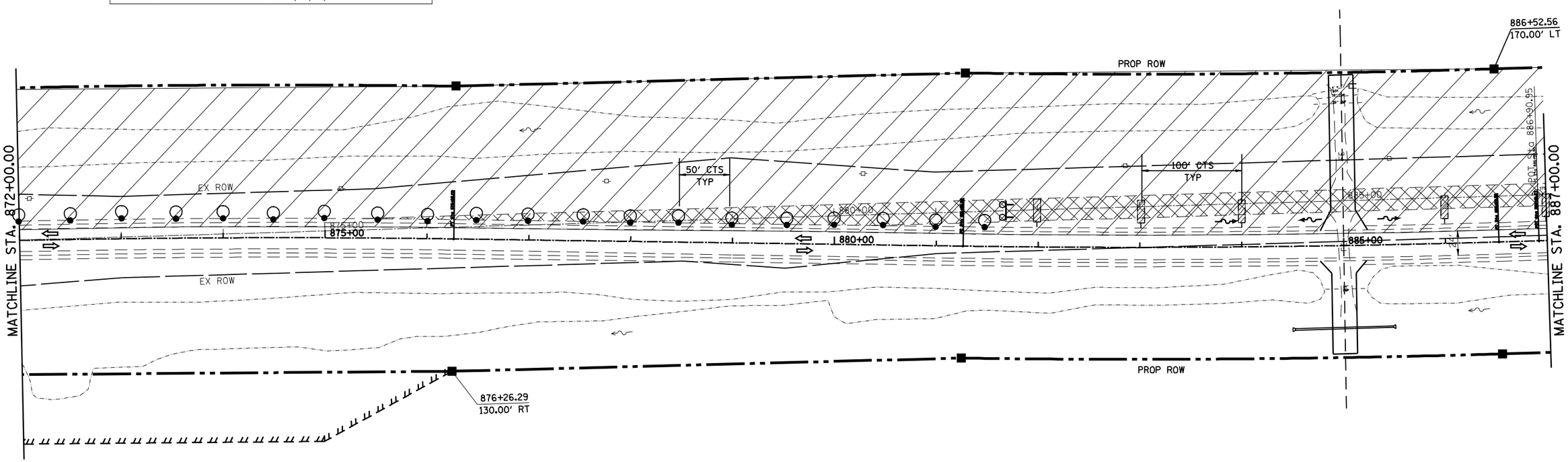

LEGEND

- WORK AREA
- SIGN
- TYPE III BARRICADE
- DRUM WITH STEADY BURNING LIGHT
- TRAFFIC SIGNAL
- TYPE C BIDIRECTIONAL REFLECTOR
- TEMPORARY CONCRETE BARRIER (STD 704001)
- IMPACT ATTENUATOR
- STEADY BURNING LIGHTS AND DOUBLE VERTICAL PANELS
- DOUBLE VERTICAL PANEL

NORTHERN AGRICULTURE, LLC
PARCEL NO. 6246122 A,B,C, TE1 & TE2

FILE NAME = c:\pw_work\PWIDOT\LAUGHLINRL\d0134498\planstage3south.dgn	USER NAME = laughlinrl	DESIGNED -	REVISED -
		DRAWN -	REVISED -
	PLOT SCALE = 100.0000 ' / IN.	CHECKED -	REVISED -
	PLOT DATE = Mar-31-2009 07:50:34AM	DATE -	REVISED -

STATE OF ILLINOIS
DEPARTMENT OF TRANSPORTATION

TRAFFIC CONTROL DETAILS
(STAGE 3 SOUTH)

SCALE: | SHEET NO. OF SHEETS | STA. 872+00 TO STA. 887+00

F.A.P RTE.	SECTION	COUNTY	TOTAL SHEETS	SHEET NO.
614	144(B-1,B-2)	CASS, MASON	351	45

CONTRACT NO. 72A76

FED. ROAD DIST. NO. | ILLINOIS | FED. AID PROJECT

NORTHERN AGRICULTURE, LLC
PARCEL NO. 6246122 A,B,C, TE1 & TE2

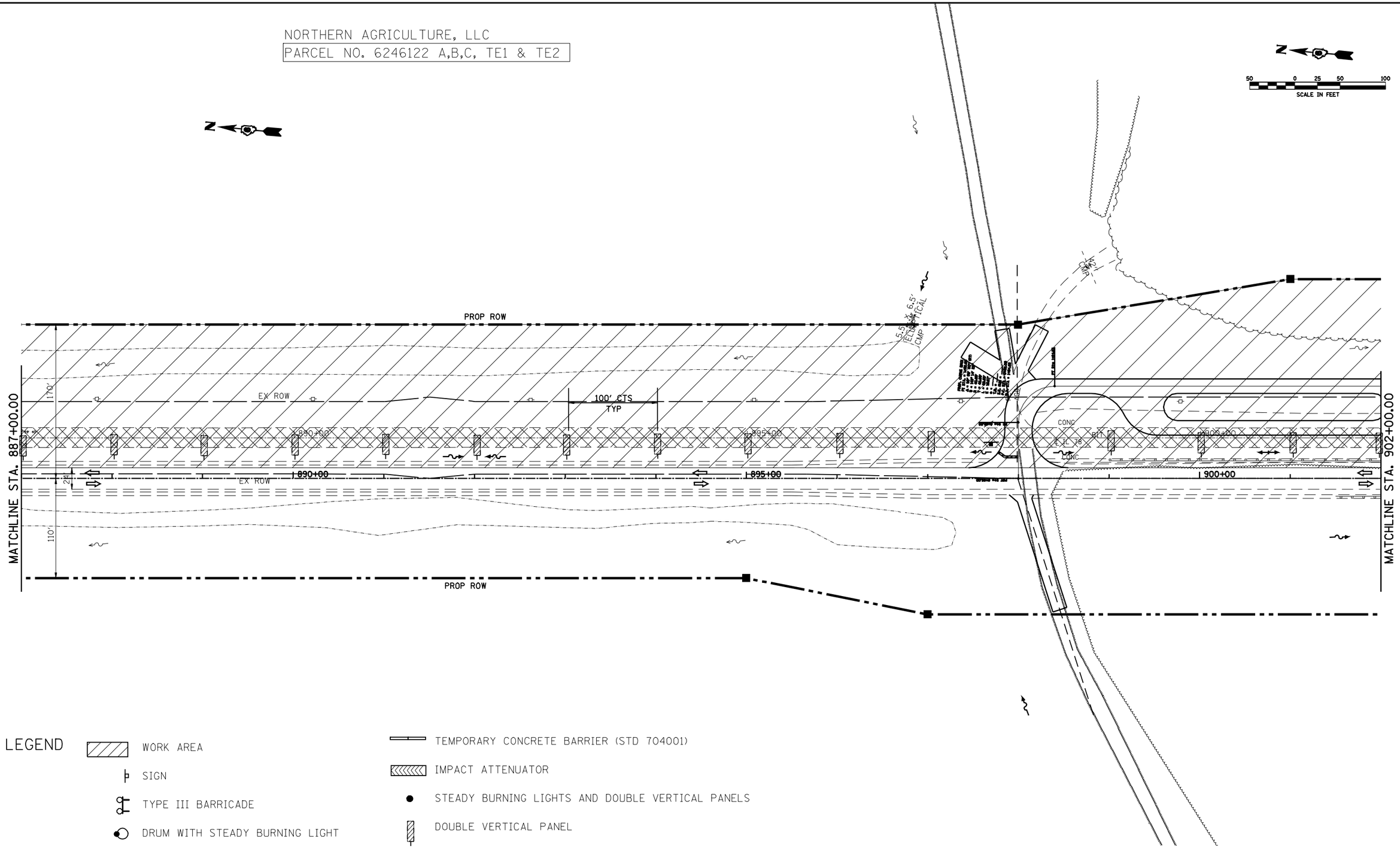

LEGEND

- WORK AREA
- SIGN
- TYPE III BARRICADE
- DRUM WITH STEADY BURNING LIGHT
- TRAFFIC SIGNAL
- TYPE C BIDIRECTIONAL REFLECTOR
- TEMPORARY CONCRETE BARRIER (STD 704001)
- IMPACT ATTENUATOR
- STEADY BURNING LIGHTS AND DOUBLE VERTICAL PANELS
- DOUBLE VERTICAL PANEL

NORTHERN AGRICULTURE, LLC
PARCEL NO. 6246122 A,B,C, TE1 & TE2

FILE NAME = c:\pw_work\PWIDOT\LAUGHLINRL\d0134498\planstage3south.dgn	USER NAME = laughlinrl	DESIGNED -	REVISED -
		DRAWN -	REVISED -
	PLOT SCALE = 100.0000 ' / IN.	CHECKED -	REVISED -
	PLOT DATE = Mar-31-2009 07:50:38AM	DATE -	REVISED -

STATE OF ILLINOIS
DEPARTMENT OF TRANSPORTATION

TRAFFIC CONTROL DETAILS
(STAGE 3 SOUTH)

SCALE: | SHEET NO. OF SHEETS | STA. 887+00 TO STA. 902+00

F.A.P RTE.	SECTION	COUNTY	TOTAL SHEETS	SHEET NO.
614	144(B-1,B-2)	CASS, MASON	351	46

CONTRACT NO. 72A76

FED. ROAD DIST. NO. | ILLINOIS | FED. AID PROJECT

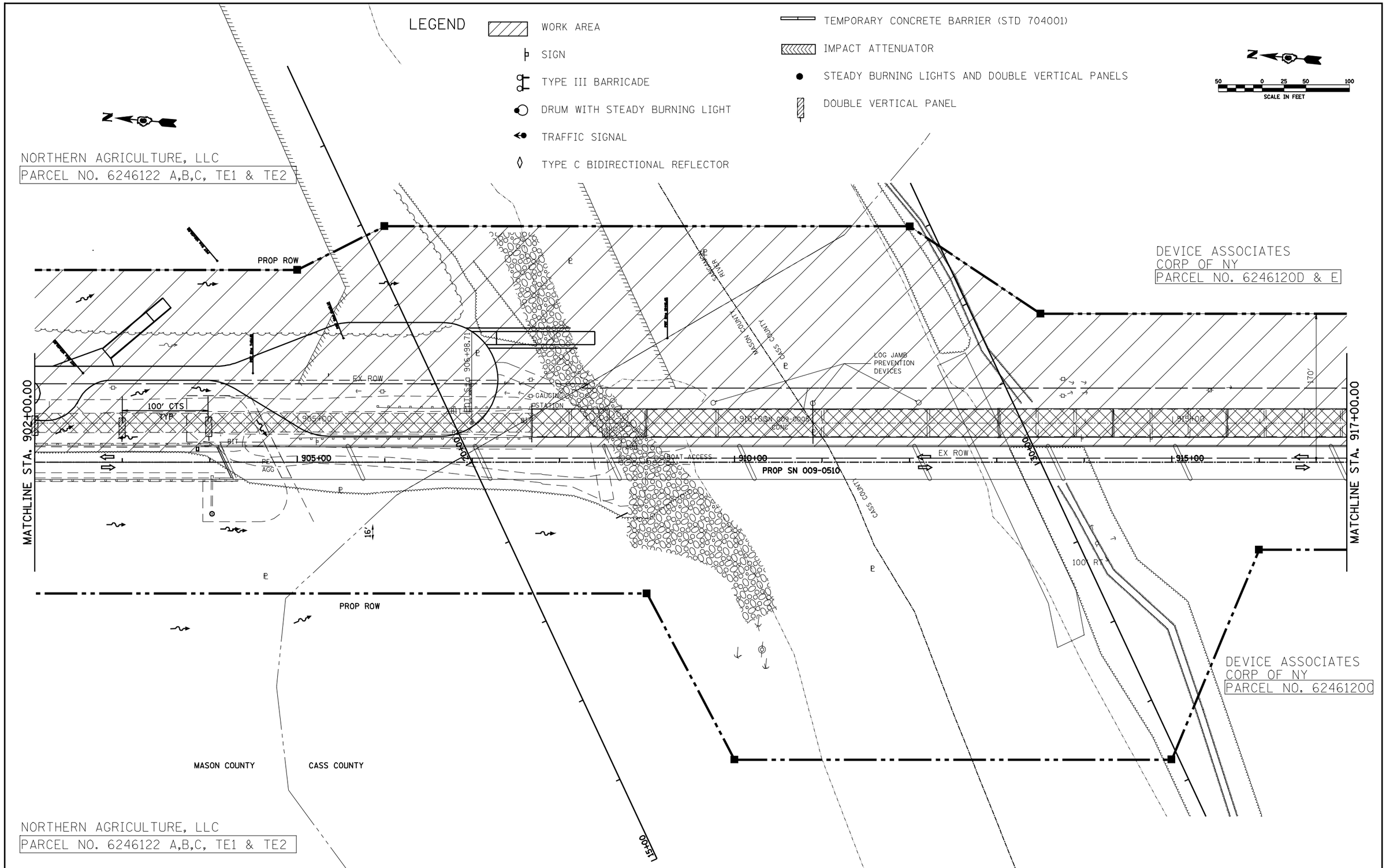

FILE NAME = c:\pw_work\PWIDOT\LAUGHLINRL\d0134498\planstage3south.dgn	USER NAME = laughlinrl	DESIGNED -	REVISED -
		DRAWN -	REVISED -
	PLOT SCALE = 100.0000 ' / IN.	CHECKED -	REVISED -
	PLOT DATE = Mar-31-2009 07:50:41AM	DATE -	REVISED -

STATE OF ILLINOIS
DEPARTMENT OF TRANSPORTATION

TRAFFIC CONTROL DETAILS
(STAGE 3 SOUTH)

SCALE: | SHEET NO. OF SHEETS | STA. 902+00 TO STA. 917+00

F.A.P RTE.	SECTION	COUNTY	TOTAL SHEETS	SHEET NO.
614	144(B-1,B-2)	CASS, MASON	351	47
		CONTRACT NO. 72A76		
FED. ROAD DIST. NO.	ILLINOIS	FED. AID PROJECT		

LEGEND

- WORK AREA
- SIGN
- TYPE III BARRICADE
- DRUM WITH STEADY BURNING LIGHT
- TRAFFIC SIGNAL
- TYPE C BIDIRECTIONAL REFLECTOR
- TEMPORARY CONCRETE BARRIER (STD 704001)
- IMPACT ATTENUATOR
- STEADY BURNING LIGHTS AND DOUBLE VERTICAL PANELS
- DOUBLE VERTICAL PANEL

DEVICE ASSOCIATES
CORP OF NY
PARCEL NO. 6246120 D & E

N

50 0 25 50 100
SCALE IN FEET

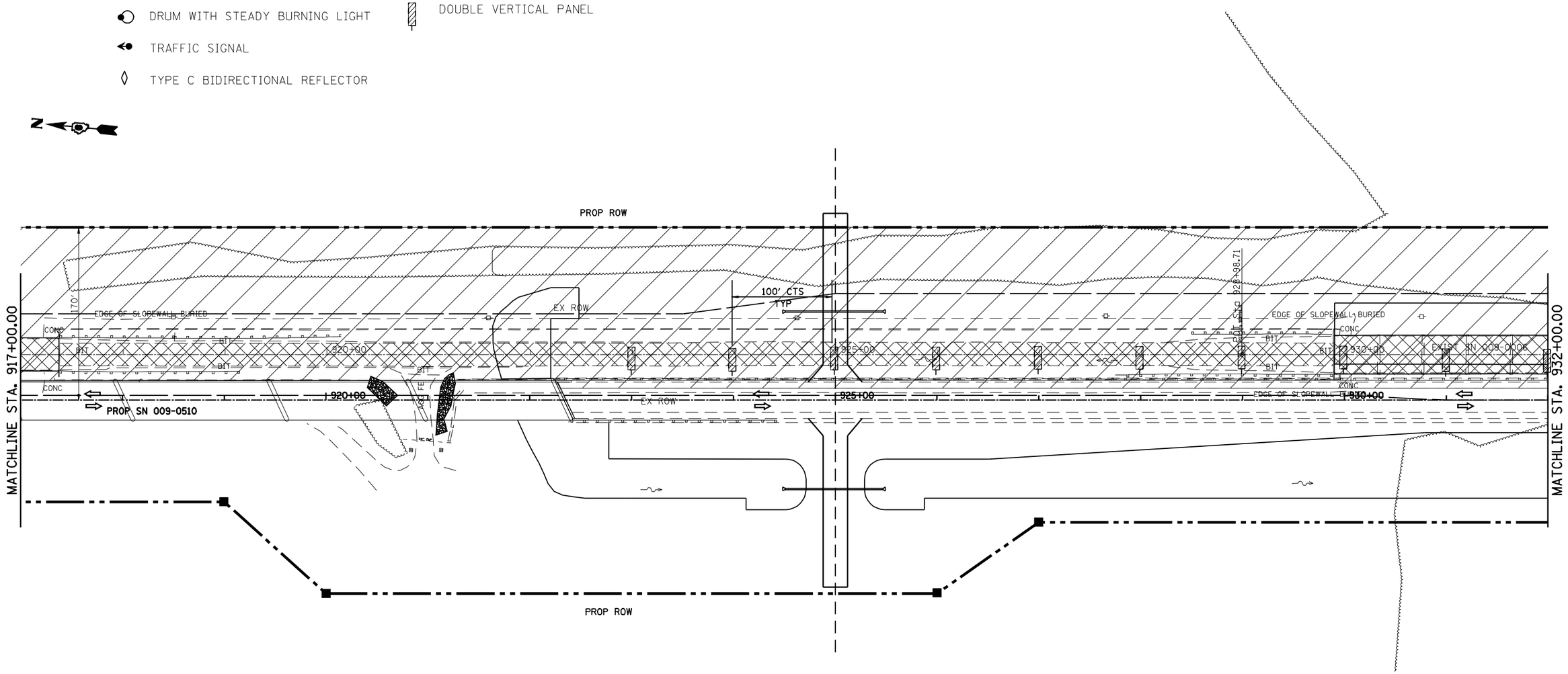

DEVICE ASSOCIATES
CORP OF NY
PARCEL NO. 6246120C

FILE NAME = c:\pw_work\PWIDOT\LAUGHLINRL\d0134498\planstage3south.dgn	USER NAME = laughlinrl	DESIGNED -	REVISED -	STATE OF ILLINOIS DEPARTMENT OF TRANSPORTATION	TRAFFIC CONTROL DETAILS (STAGE 3 SOUTH)	F.A.P RTE.	SECTION	COUNTY	TOTAL SHEETS / SHEET NO.
		DRAWN -	REVISED -			614	144(B-1,B-2)	CASS, MASON	351 / 48
	PLOT SCALE = 100.0000 ' / IN.	CHECKED -	REVISED -					CONTRACT NO. 72A76	
	PLOT DATE = Mar-31-2009 07:50:45AM	DATE -	REVISED -		SCALE: SHEET NO. OF SHEETS STA. 917+00 TO STA. 932+00	FED. ROAD DIST. NO.	ILLINOIS	FED. AID PROJECT	

DEVICE ASSOCIATES
CORP OF NY
PARCEL NO. 6246120A & B

VILLAGE OF CHANDLERVILLE
PARCEL NO. 6246119A & B

N

50 0 25 50 100
SCALE IN FEET

MATCHLINE STA. 932+00.00

MATCHLINE STA. 947+00.00

18" CMP

15" STEEL

36" CMP

EX ROW

PROP ROW

CONC

AGG

BIT

100' CTS TYP

50' CTS TYP

140'

80'

935+00

940+00

945+00

POND

RICHARD B. AND FREDA BROWN
PARCEL NO. 6246118

DEVICE ASSOCIATES
CORP OF NY
PARCEL NO. 6246120A & B

LEGEND

- WORK AREA
- SIGN
- TYPE III BARRICADE
- DRUM WITH STEADY BURNING LIGHT
- TRAFFIC SIGNAL
- TYPE C BIDIRECTIONAL REFLECTOR
- TEMPORARY CONCRETE BARRIER (STD 704001)
- IMPACT ATTENUATOR
- STEADY BURNING LIGHTS AND DOUBLE VERTICAL PANELS
- DOUBLE VERTICAL PANEL

FILE NAME = c:\pw_work\PWIDOT\LAUGHLINRL\d0134498\planstage3south.dgn	USER NAME = laughlinrl	DESIGNED -	REVISED -
		DRAWN -	REVISED -
	PLOT SCALE = 100.0000 ' / IN.	CHECKED -	REVISED -
	PLOT DATE = Mar-31-2009 07:50:49AM	DATE -	REVISED -

STATE OF ILLINOIS
DEPARTMENT OF TRANSPORTATION

TRAFFIC CONTROL DETAILS
(STAGE 3 SOUTH)

SCALE: | SHEET NO. OF SHEETS | STA. 932+00 TO STA. 947+00

F.A.P RTE.	SECTION	COUNTY	TOTAL SHEETS	SHEET NO.
614	144(B-1,B-2)	CASS, MASON	351	49

CONTRACT NO. 72A76

FED. ROAD DIST. NO. | ILLINOIS | FED. AID PROJECT

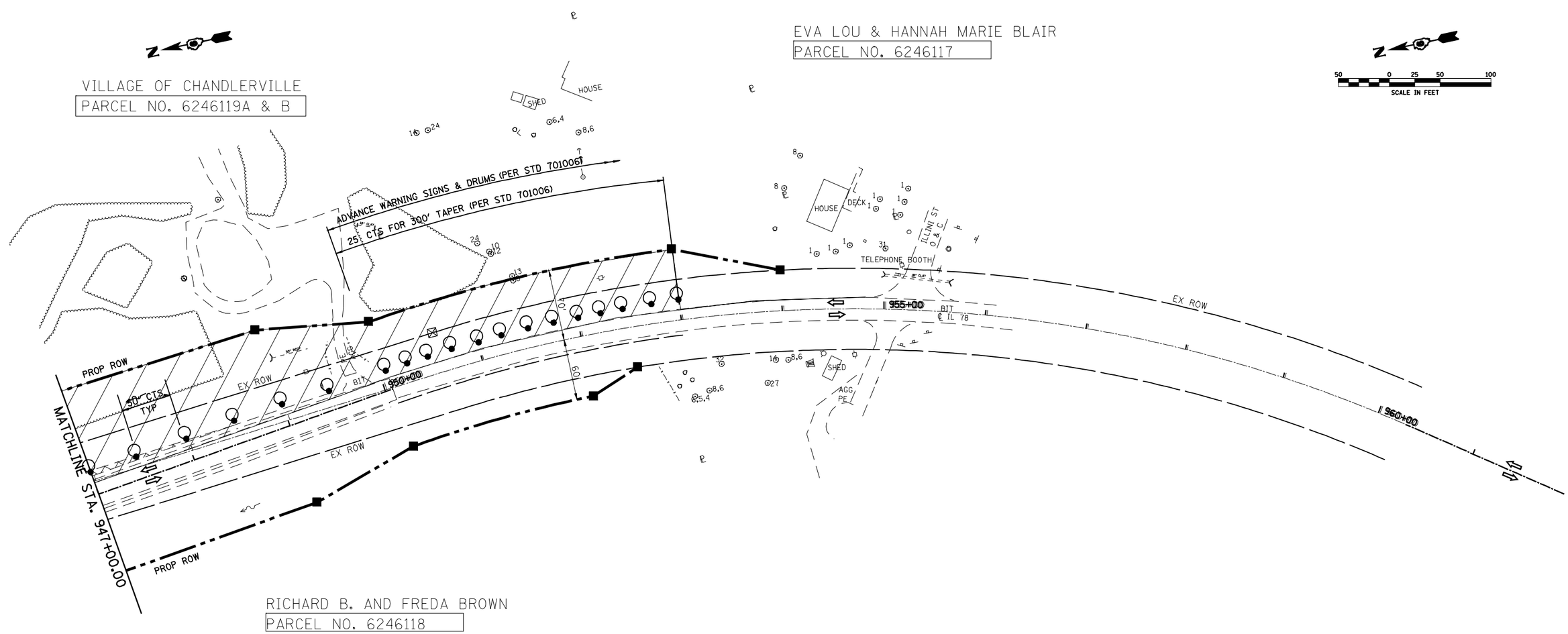

LEGEND

- WORK AREA
- SIGN
- TYPE III BARRICADE
- DRUM WITH STEADY BURNING LIGHT
- TRAFFIC SIGNAL
- TYPE C BIDIRECTIONAL REFLECTOR
- TEMPORARY CONCRETE BARRIER (STD 704001)
- IMPACT ATTENUATOR
- STEADY BURNING LIGHTS AND DOUBLE VERTICAL PANELS
- DOUBLE VERTICAL PANEL

FILE NAME = c:\pw_work\PWIDOT\LAUGHLINRL\d0134498\planstage3south.dgn	USER NAME = laughlinrl	DESIGNED -	REVISED -	STATE OF ILLINOIS DEPARTMENT OF TRANSPORTATION	TRAFFIC CONTROL DETAILS (STAGE 3 SOUTH)	F.A.P RTE.	SECTION	COUNTY	TOTAL SHEETS	SHEET NO.
		DRAWN -	REVISED -			614	144(B-1,B-2)	CASS, MASON	351	50
	PLOT SCALE = 100.0000 ' / IN.	CHECKED -	REVISED -					CONTRACT NO. 72A76		
	PLOT DATE = Mar-31-2009 07:50:53AM	DATE -	REVISED -		SCALE: SHEET NO. OF SHEETS STA. 947+00 TO STA. 955+00	FED. ROAD DIST. NO.	ILLINOIS	FED. AID PROJECT		

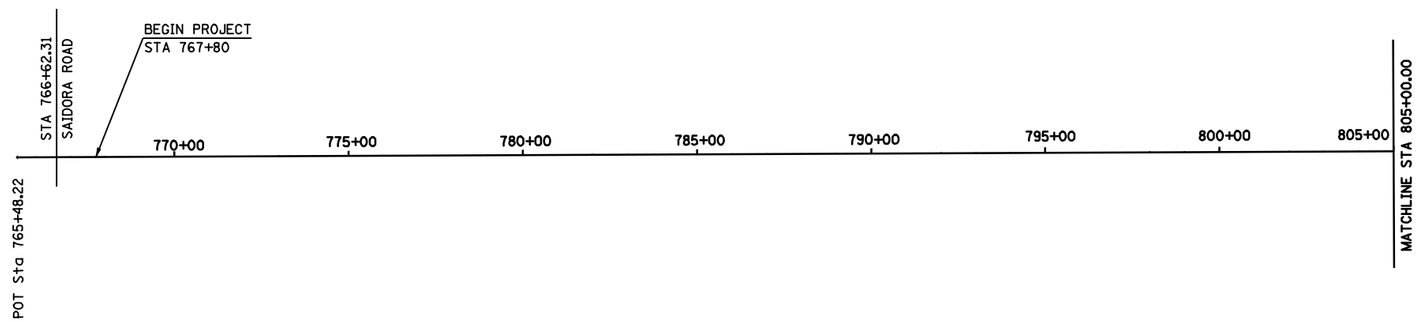

PROP. CURVEC1
PI STA. =819+93.05
Δ =5° 03′ 20″ (LT)
D =0° 30′ 02″
R =11,448.49′
T =505.40′
L =1,010.14′
E =11.15′
e = N.C.
T.R. = _____
S.E. RUN = _____
P.C. STA =814+87.65
P.T. STA =824+97.79

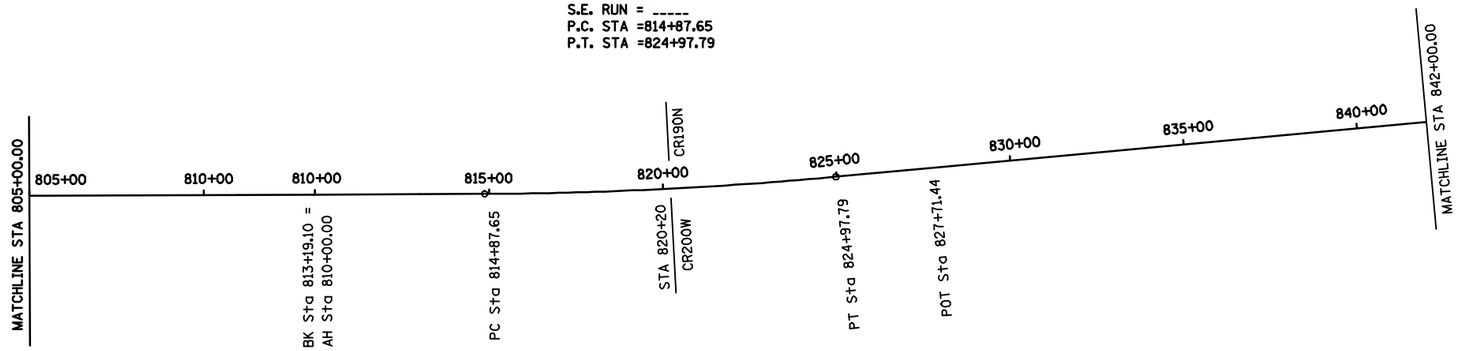

SEE THE PLAN SHEETS THAT FOLLOW
FOR THE REST OF THE PPP PROJECT
(STA 767+80.00 TO STA 854+00)
AS WELL AS THE 3R PROJECT
(STA 854+00 TO STA 953+00 TO THE SOUTH

FILE NAME = c:\pw_work\PWIDOT\LAUGHLINRL\d0134498\Sht3Palign.dgn	USER NAME = laughlinrl	DESIGNED -	REVISED -	STATE OF ILLINOIS DEPARTMENT OF TRANSPORTATION	LINE DIAGRAM STA 765+48 TO STA 842+00			F.A.P RTE.	SECTION	COUNTY	TOTAL SHEETS / SHEET NO.
	PLOT SCALE = 100.0000 ′ / IN.	DRAWN -	REVISED -					614	144(B-1, B-2)	CASS, MASON	351 / 51
	PLOT DATE = Mar-31-2009 07:51:02AM	CHECKED -	REVISED -							CONTRACT NO. 72A76	
		DATE -	REVISED -		SCALE:	SHEET NO. OF SHEETS	STA. TO STA.		ILLINOIS	FED. AID PROJECT	

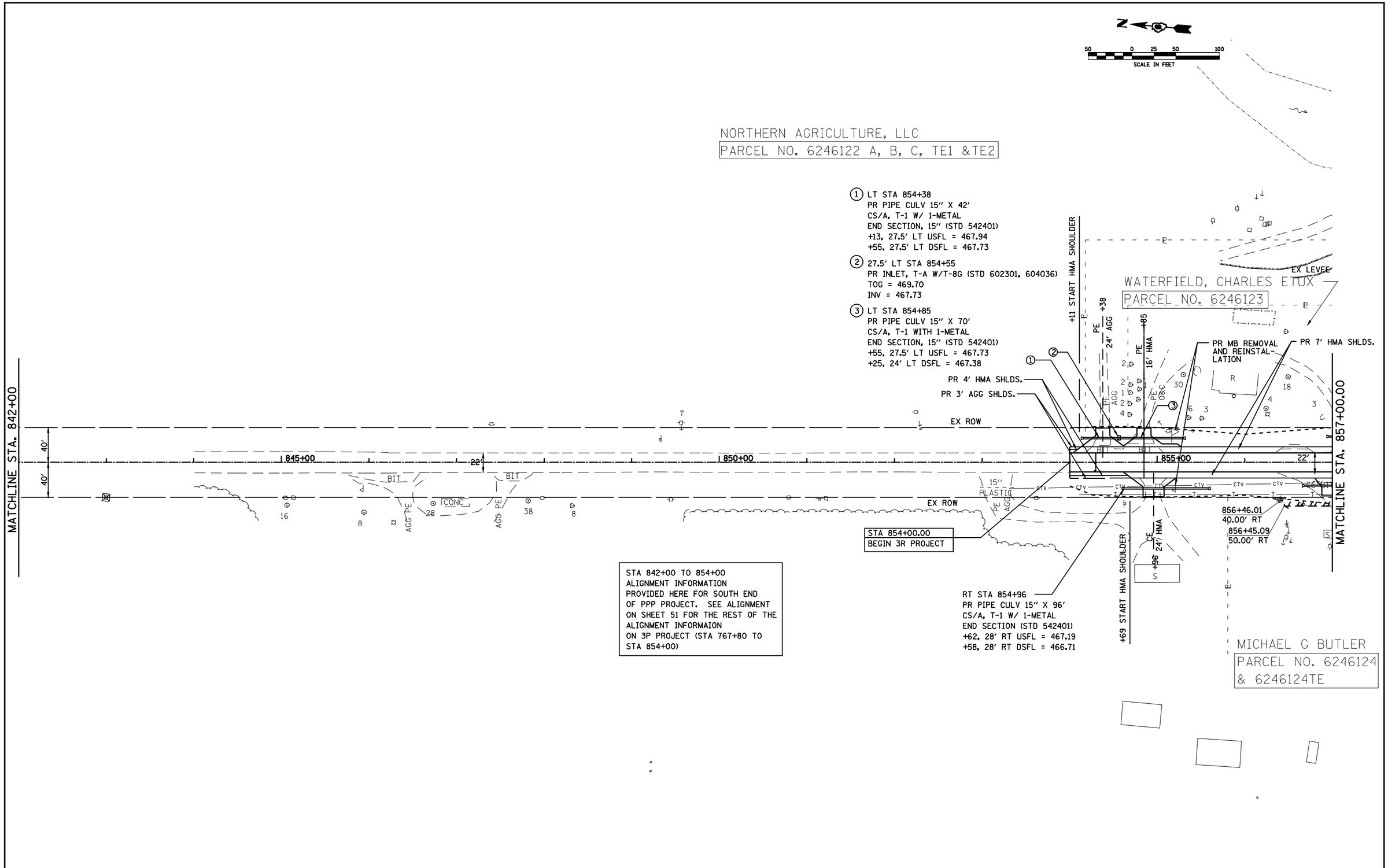

• CASS AND MASON COUNTIES

FILE NAME = c:\pw_work\PWIDOT\LAUGHLINRL\d0134498\planshects50scale-1.dgn	USER NAME = laughlinrl	DESIGNED -	REVISED -	STATE OF ILLINOIS DEPARTMENT OF TRANSPORTATION	PLAN VIEW	F.A.P RTE.	SECTION	COUNTY	TOTAL SHEETS	SHEET NO.
		DRAWN -	REVISED -			614	144(B-1,B-2)	•	351	52
	PLOT SCALE = 100.0000 ' / IN.	CHECKED -	REVISED -					CONTRACT NO. 72A76		
	PLOT DATE = Mar-31-2009 07:51:05AM	DATE -	REVISED -		SCALE: SHEET NO. 1 OF 8 SHEETS STA. 854+00 TO STA. 857+00	FED. ROAD DIST. NO.	ILLINOIS	FED. AID PROJECT		

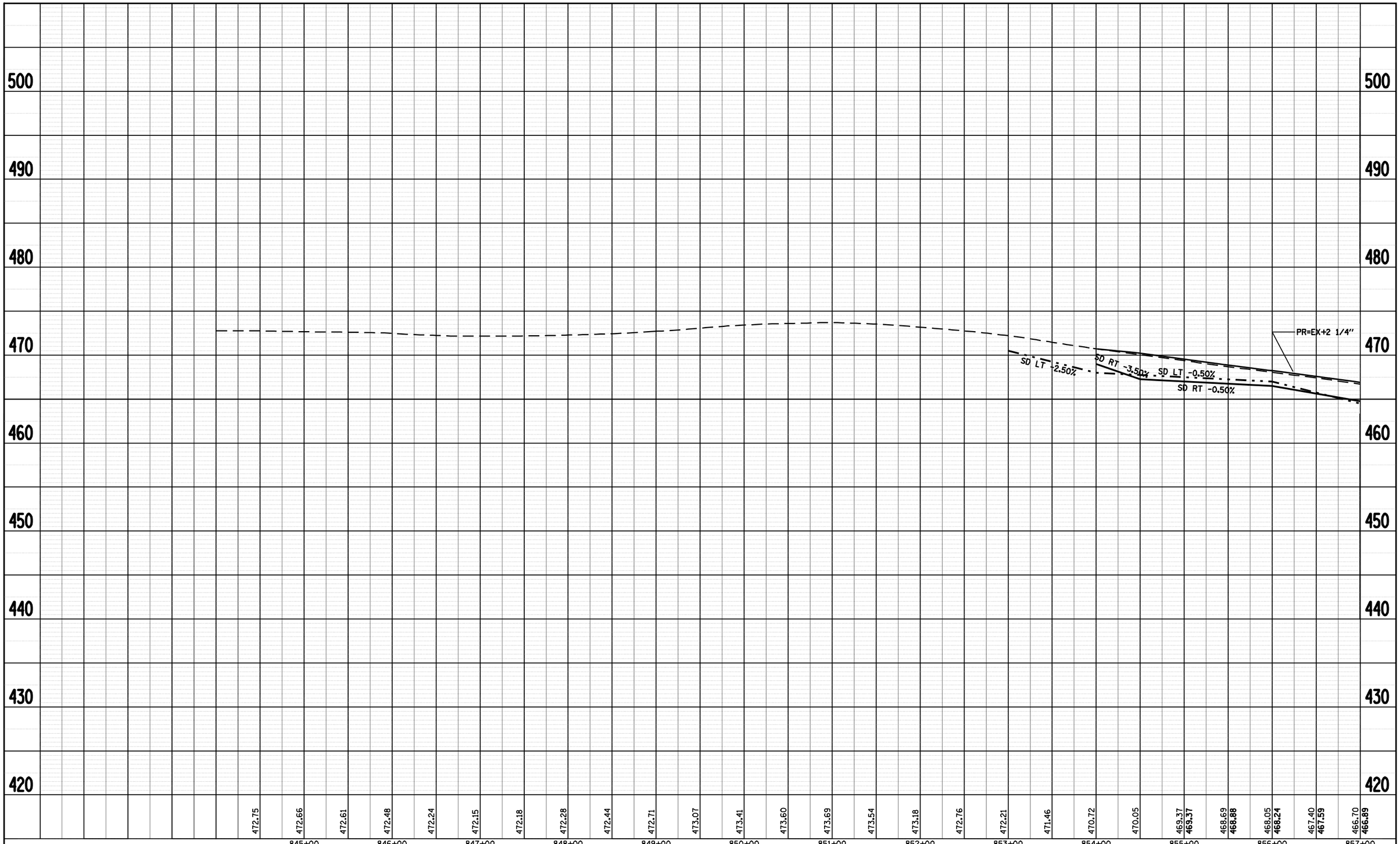

PLAN

NOTE BOOK NO. ____

SURVEYED ____
PLOTTED ____
ALIGNMENT CHECKED ____
RT. OF WAY CHECKED ____
CADD FILE NAME ____

BY	DATE

PROFILE

NOTE BOOK NO. ____

SURVEYED ____
PLOTTED ____
GRADES CHECKED ____
B.M. NOTED ____
STRUCTURE NOTAT'NS CHKD ____

BY	DATE

FILE NAME = c:\pw_work\PWIDOT\LAUGHLINRL\d0134498\prprp001_50scalesheets-1.dgn	USER NAME = laughlnrl	DESIGNED - JCN	REVISED -
		DRAWN - JJB	REVISED -
	PLOT SCALE = 100.0000 ' / IN.	CHECKED - VJM	REVISED -
	PLOT DATE = Mar-31-2009 07:51:07AM	DATE - 08/2007	REVISED -

STATE OF ILLINOIS
DEPARTMENT OF TRANSPORTATION

PROFILE

SCALE: 1"=100' | SHEET NO. 1 OF 8 SHEETS | STA. 844+00 TO STA. 857+00

F.A.P RTE.	SECTION	COUNTY	TOTAL SHEETS	SHEET NO.
614	144(B-1,B-2)	CASS, MASON	351	53
	IL 78	CONTRACT NO. 72A76		
FED. ROAD DIST. NO.	ILLINOIS	FED. AID PROJECT		

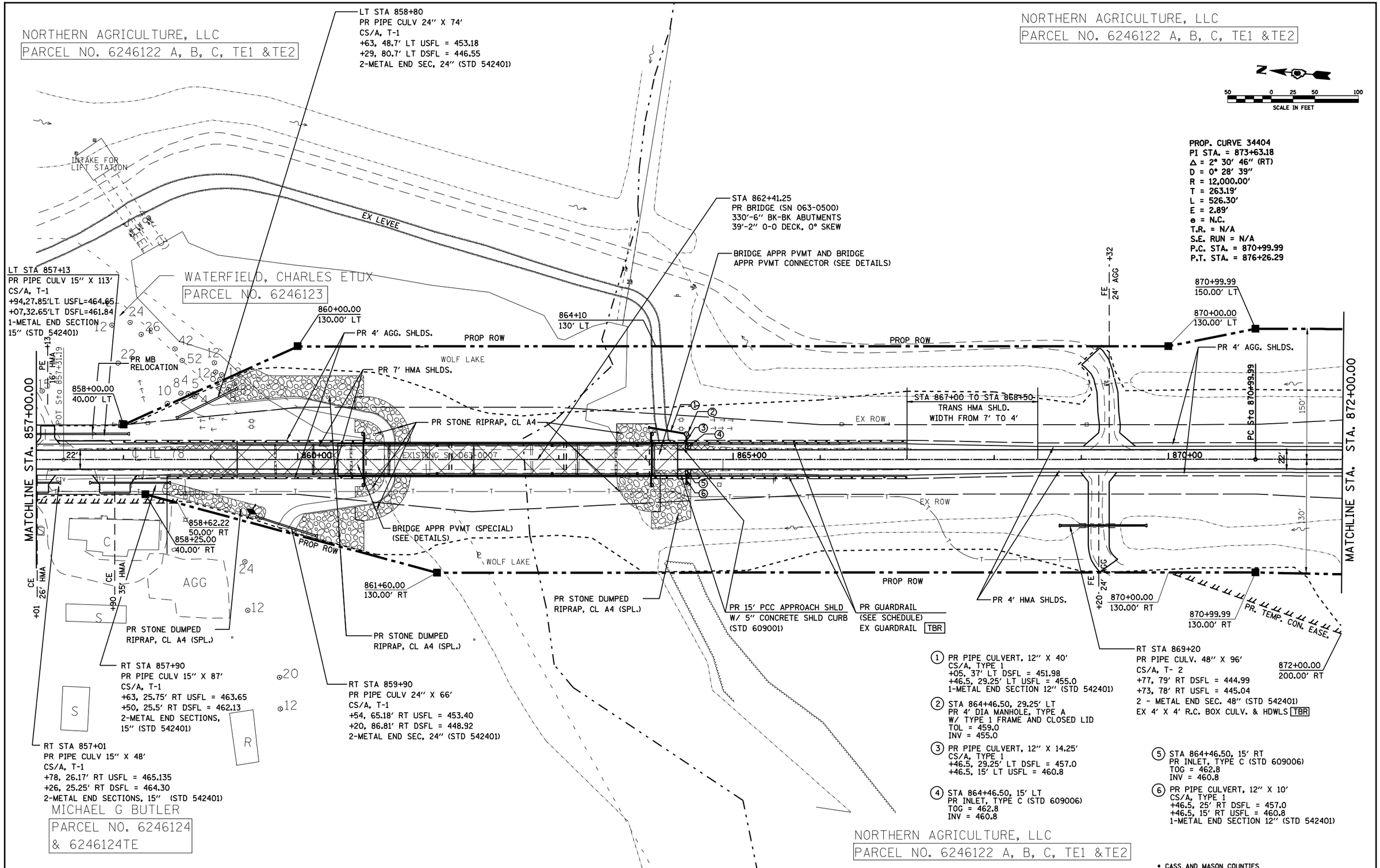

• CASS AND MASON COUNTIES

FILE NAME = c:\pw_work\PWIDOT\LAUGHLINRL\d0134498\plansheets50scale-2.dgn	USER NAME = laughlinrl	DESIGNED -	REVISED -
		DRAWN -	REVISED -
	PLOT SCALE = 100.0000 ' / IN.	CHECKED -	REVISED -
	PLOT DATE = Mar-31-2009 07:51:10AM	DATE -	REVISED -

STATE OF ILLINOIS
DEPARTMENT OF TRANSPORTATION

PLAN VIEW

SCALE: | SHEET NO. 2 OF 8 SHEETS | STA. 857+00 TO STA. 872+00

F.A.P RTE.	SECTION	COUNTY	TOTAL SHEETS	SHEET NO.
614	144(B-1,B-2)	•	351	54

CONTRACT NO. 72A76

FED. ROAD DIST. NO. | ILLINOIS | FED. AID PROJECT

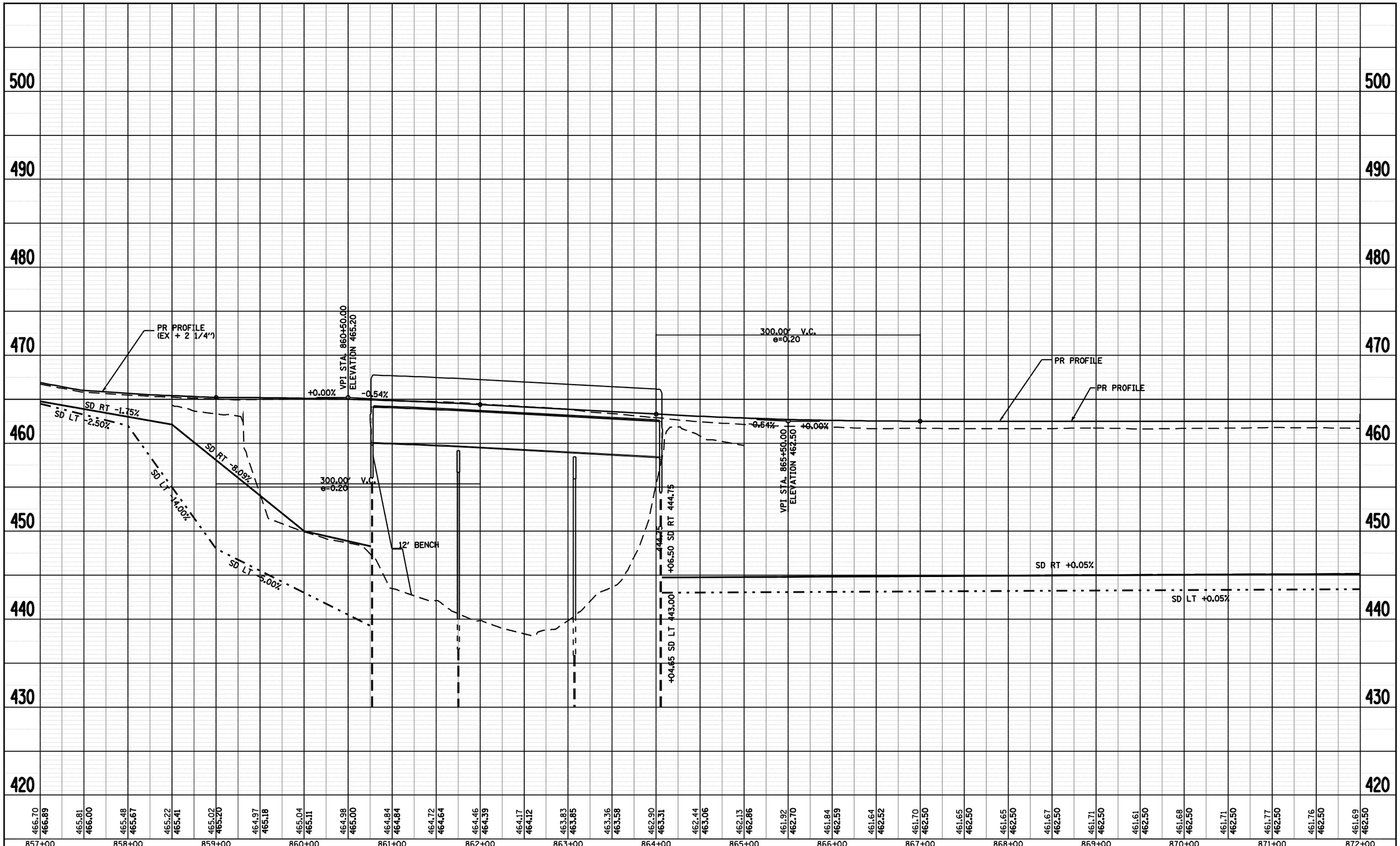

PLAN	BY	DATE
SURVEYED		
PLOTTED		
ALIGNMENT CHECKED		
RT. OF WAY CHECKED		
CADD FILE NAME		
NOTE BOOK NO.		

PROFILE	BY	DATE
SURVEYED		
PLOTTED		
GRADES CHECKED		
B.M. NOTED		
STRUCTURE NOTAT'NS CHK'D		
NOTE BOOK NO.		

FILE NAME = c:\pw_work\PWIDOT\LAUGHLINRL\d0134498\proprp001_50scalesheets-2.dgn

USER NAME = laughlinrl	DESIGNED - JCN	REVISED -	
	DRAWN - JJB	REVISED -	
PLOT SCALE = 100.0000 ' / IN.	CHECKED - VJM	REVISED -	
PLOT DATE = Mar-31-2009 07:51:12AM	DATE - 08/2007	REVISED -	

STATE OF ILLINOIS
DEPARTMENT OF TRANSPORTATION

PROFILE

SCALE: 1"=100' | SHEET NO. 2 OF 8 SHEETS | STA. 857+00 TO STA. 872+00

F.A.P RTE.	SECTION	COUNTY	TOTAL SHEETS	SHEET NO.
614	144(B-1,B-2)	CASS, MASON	351	55
	IL 78	CONTRACT NO. 72A76		
FED. ROAD DIST. NO.	ILLINOIS	FED. AID PROJECT		

NORTHERN AGRICULTURE, LLC
PARCEL NO. 6246122 A, B, C, TE1 &TE2

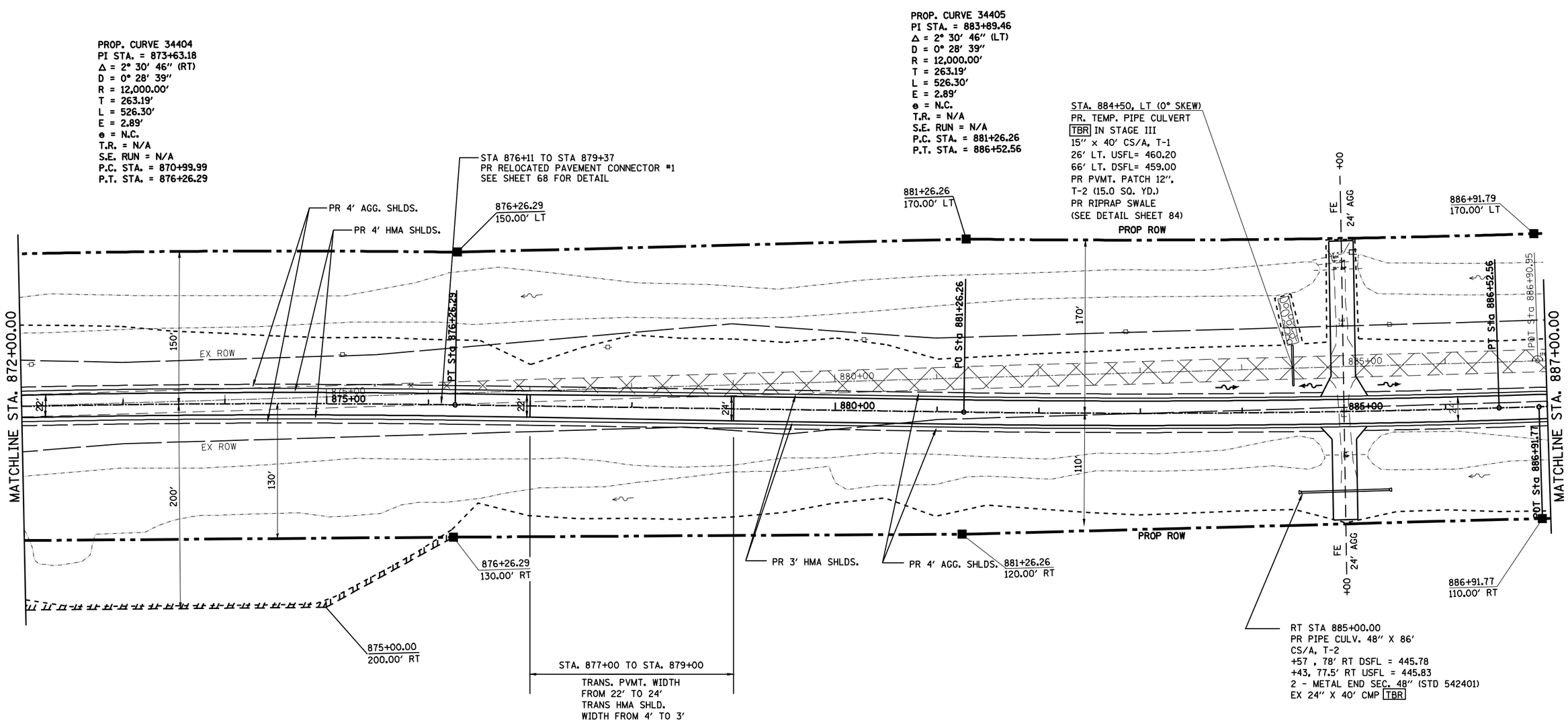

NORTHERN AGRICULTURE, LLC
PARCEL NO. 6246122 A, B, C, TE1 &TE2

• CASS AND MASON COUNTIES

FILE NAME = c:\pw_work\PWIDOT\LAUGHLINRL\d0134498\planshects50scale-3.dgn	USER NAME = laughlinrl	DESIGNED -	REVISED -	STATE OF ILLINOIS DEPARTMENT OF TRANSPORTATION	PLAN VIEW	F.A.P RTE.	SECTION	COUNTY	TOTAL SHEETS / SHEET NO.
		DRAWN -	REVISED -			614	144(B-1,B-2)	•	351 / 56
	PLOT SCALE = 100.0000 ′ / IN.	CHECKED -	REVISED -					CONTRACT NO. 72A76	
	PLOT DATE = Mar-31-2009 07:51:15AM	DATE -	REVISED -		SCALE: / SHEET NO. 3 OF 8 SHEETS / STA. 872+00 TO STA. 887+00	FED. ROAD DIST. NO.	ILLINOIS	FED. AID PROJECT	

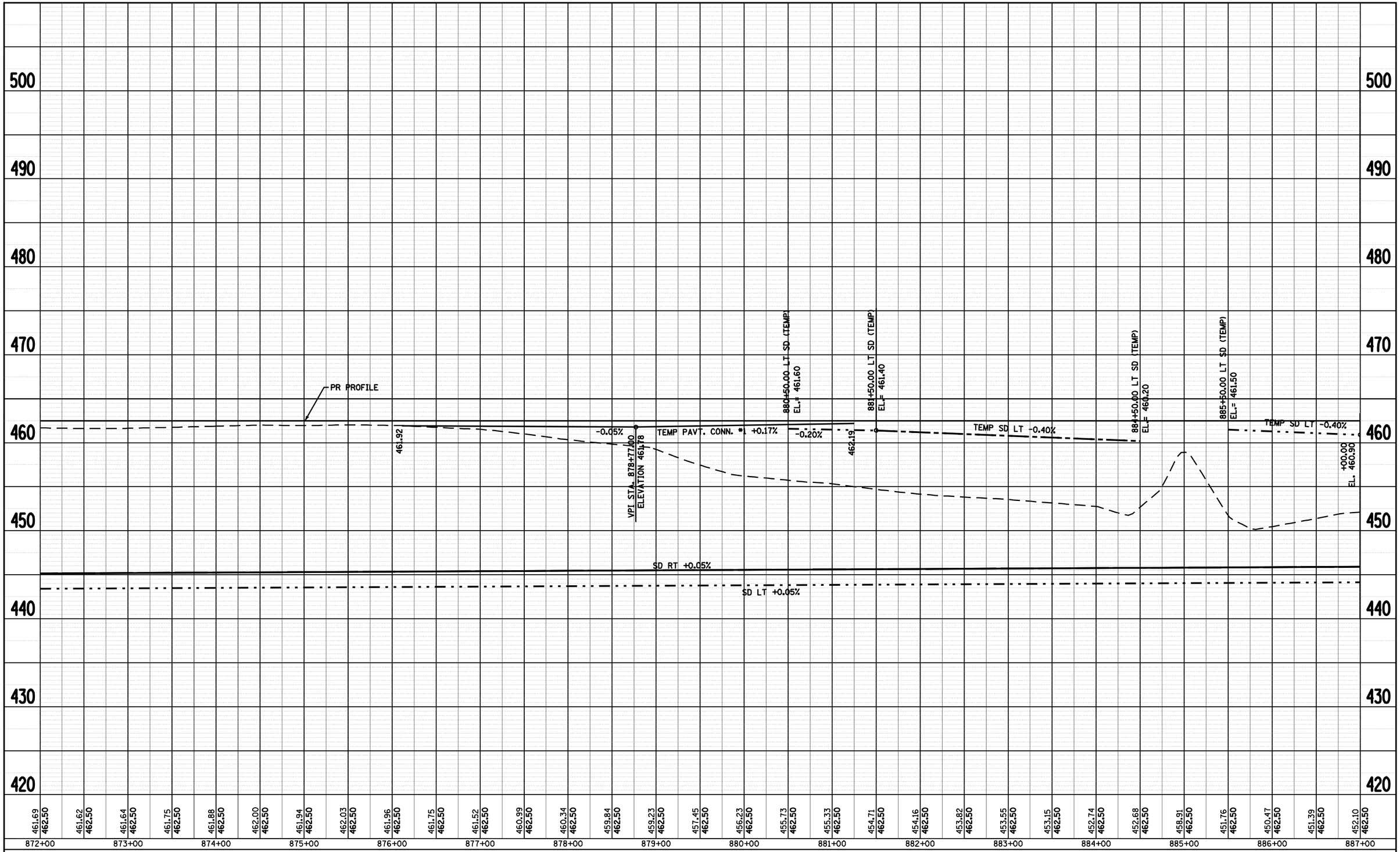

PLAN		BY	DATE
	SURVEYED		
	PLOTTED		
	ALIGNMENT CHECKED		
NOTE BOOK	RT. OF WAY CHECKED		
NO.____	CADD FILE NAME		

PROFILE		BY	DATE
	SURVEYED		
	PLOTTED		
	GRADES CHECKED		
NOTE BOOK	B.M. NOTED		
NO.____	STRUCTURE NOTATNS CHKD		

FILE NAME = c:\pw_work\PWIDOT\LAUGHLINRL\d0134498\prdprp001_50scalesheets-3.dgn	USER NAME = laughlinrl	DESIGNED - JCN	REVISED -
		DRAWN - JJB	REVISED -
	PLOT SCALE = 100.0000 ' / IN.	CHECKED - VJM	REVISED -
	PLOT DATE = Mar-31-2009 07:51:17AM	DATE - 08/2007	REVISED -

STATE OF ILLINOIS
DEPARTMENT OF TRANSPORTATION

PROFILE

SCALE: 1"=100' | SHEET NO. 3 OF 8 SHEETS | STA. 872+00 TO STA. 887+00

F.A.P RTE.	SECTION	COUNTY	TOTAL SHEETS	SHEET NO.
614	144(B-1,B-2)	CASS, MASON	351	57
	IL 78	CONTRACT NO. 72A76		
FED. ROAD DIST. NO.	ILLINOIS	FED. AID PROJECT		

NORTHERN AGRICULTURE, LLC
PARCEL NO. 6246122 A, B, C, TE1 &TE2

NOTE: SEE SEPARATE DETAILS FOR BOAT ACCESS RD AND PARKING AREA LAYOUT

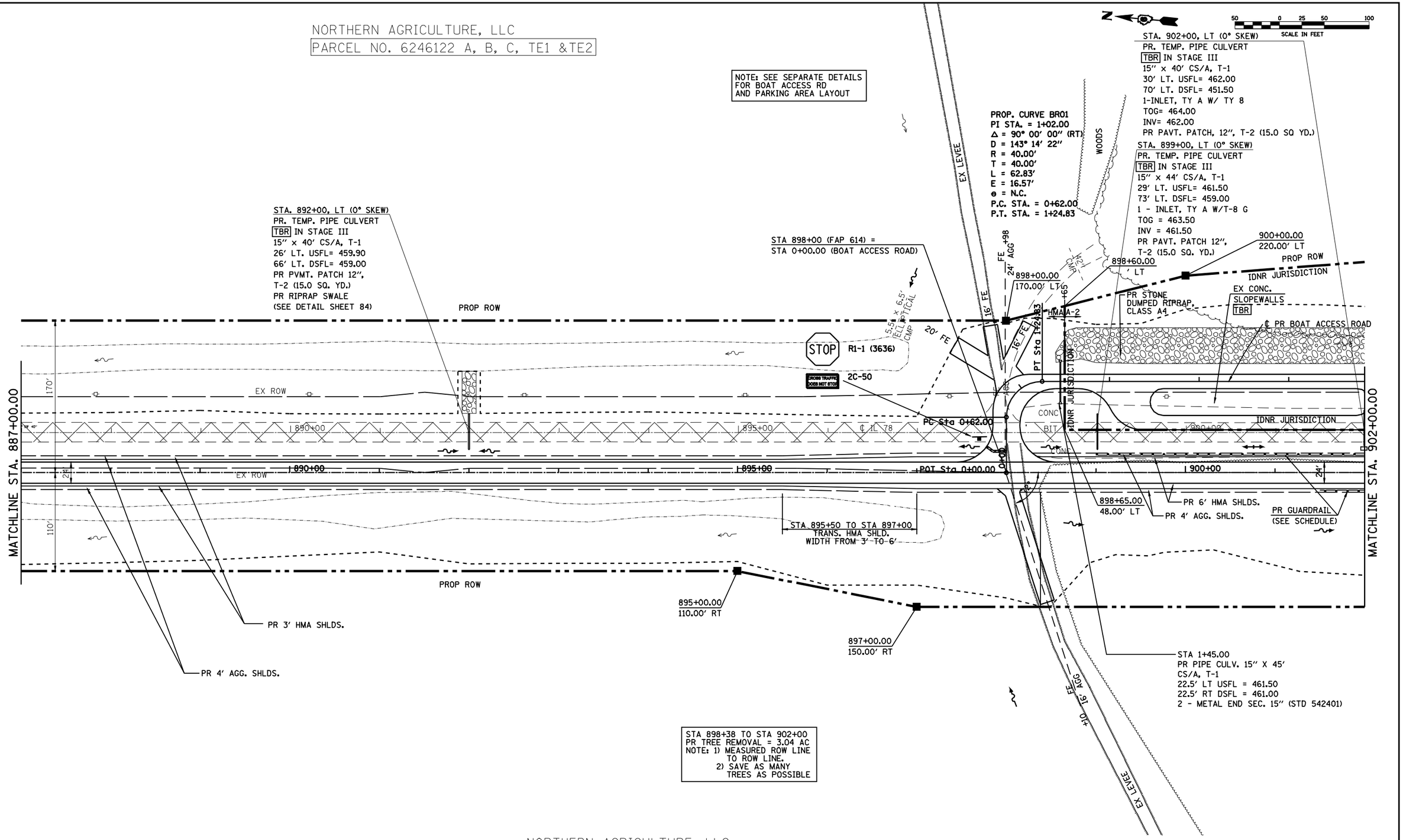

STA 898+38 TO STA 902+00
PR TREE REMOVAL = 3.04 AC
NOTE: 1) MEASURED ROW LINE TO ROW LINE.
2) SAVE AS MANY TREES AS POSSIBLE

NORTHERN AGRICULTURE, LLC
PARCEL NO. 6246122 A, B, C, TE1 &TE2

• CASS AND MASON COUNTIES

FILE NAME = c:\pw_work\PWIDOT\LAUGHLINRL\d0134498\plansheets50scale-4.dgn	USER NAME = laughlinrl	DESIGNED -	REVISED -	STATE OF ILLINOIS DEPARTMENT OF TRANSPORTATION	PLAN VIEW		F.A.P RTE.	SECTION	COUNTY	TOTAL SHEETS	SHEET NO.
	PLOT SCALE = 100.0000 ' / IN.	DRAWN -	REVISED -				614	144(B-1,B-2)	•	351	58
	PLOT DATE = Mar-31-2009 07:51:20AM	CHECKED -	REVISED -						CONTRACT NO. 72A76		
		DATE -	REVISED -		SCALE:	SHEET NO. 4 OF 8 SHEETS	STA. 887+00 TO STA. 902+00	FED. ROAD DIST. NO.	ILLINOIS	FED. AID PROJECT	

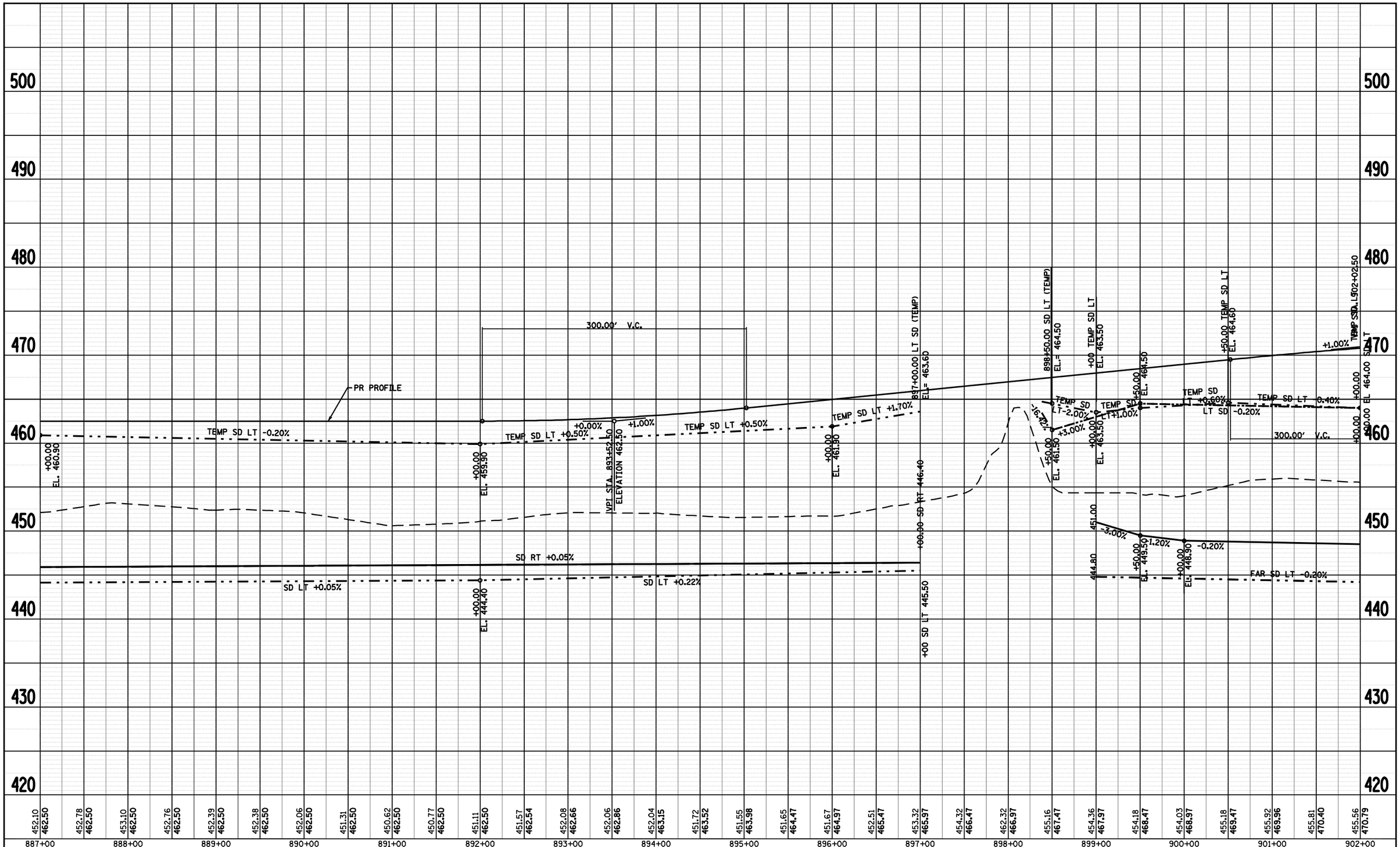

PLAN		BY	DATE
	SURVEYED		
	PLOTTED		
	ALIGNMENT CHECKED		
	RT. OF WAY CHECKED		
NOTE BOOK NO.	CADD FILE NAME		

PROFILE		BY	DATE
	SURVEYED		
	PLOTTED		
	GRADES CHECKED		
NOTE BOOK NO.	BRM. NOTED		
	STRUCTURE NOTATNS CHKD		

FILE NAME = c:\pw_work\PWIDOT\LAUGHLINRL\d0134498\prcprp001_50scalesheets-4.dgn	USER NAME = laughlinrl	DESIGNED - JCN	REVISED -
		DRAWN - JJB	REVISED -
	PLOT SCALE = 100.0000 ' / IN.	CHECKED - VJM	REVISED -
	PLOT DATE = Mar-31-2009 07:51:23AM	DATE - 08/2007	REVISED -

STATE OF ILLINOIS
DEPARTMENT OF TRANSPORTATION

PROFILE

SCALE: 1"=100' | SHEET NO. 4 OF 8 SHEETS | STA. 887+00 TO STA. 902+00

F.A.P RTE.	SECTION	COUNTY	TOTAL SHEETS	SHEET NO.
614	144(B-1,B-2)	CASS, MASON	351	59
	IL 78	CONTRACT NO. 72A76		
FED. ROAD DIST. NO.	ILLINOIS	FED. AID PROJECT		

NOTE: SEE SEPARATE DETAILS FOR BOAT ACCESS RD AND PARKING AREA LAYOUT

SEE NORTH & SOUTH BANK CROSS SECTIONS FOR CHANNEL EXCAVATION

SCALE IN FEET 50 0 25 50 100

NORTHERN AGRICULTURE, LLC
PARCEL NO. 6246122 A, B, C, TE1 &TE2

DEVICE ASSOCIATES CORP OF NY
PARCEL NO.624612D & E

DEVICE ASSOCIATES CORP OF NY
PARCEL NO6246120C

NORTHERN AGRICULTURE, LLC
PARCEL NO. 6246122 A, B, C, TE1 &TE2

MASON COUNTY
CASS COUNTY

POT Sta 25+00.00
POT Sta 35+00.00
POT Sta 7+34.21
POT Sta 8+45.22
POT Sta 12+15.48
POT Sta 906+98.71
55+00
MATCHLINE STA. 902+00.00
MATCHLINE STA. 917+00.00

PR STONE DUMPED RIPRAP, CLASS A4
EX CONC. SLOPEWALL TO REMAIN IN PLACE
EX CONC. SLOPEWALL TBR
IDNR JURISDICTION
PR SECONDARY (HIGH WATER LEVEL) BOAT RAMP (SEE DETAILS)
STA 6+00.00 PR ACCESS GATE (SEE DETAILS)
EX GUARDRAIL TBR
906+50.00 270.00' LT
904+00.00 87.00' LT
905+00.00 30.00' LT
902+30.00 48.00' LT
902+80.00 87.00' LT
910+00.00 30.00' LT
910+00.00 270.00' LT
912+00.00 270.00' LT
913+50.00 170.00' LT
STA 913+50.00 STA 30+00.00
PR PRIMARY (LOW WATER LEVEL) BOAT RAMP (SEE DETAILS)
EX DEBRIS DEFLECTORS TO BE REMOVED (COST INCIDENTAL TO REM OF STRUCTURE 009-0005)
SANGAMON RIVER
EX ESMT
TREES
EX ROW
GAUGING STATION
BIT
IDNR JURISDICTION
LOG JAMB PREVENTION DEVICES
SN 009-0005 CONC DECK
BOAT ACCESS
PROP SN 009-0510
PE AGG
WOODS
PR STONE RIPRAP, CL A4
65°0'0"
STA 907+00.00 (IL 78) = STA 20+00.00 (N & S BANK)
STA 911+00.00 EX SN 009-0005 TO BE REMOVED (STRUCTURE NO. 2)
STA 904+16.00 BK OF N. ABUT.
PR ROW
PR BRIDGE APPR. PVMT. (SEE DETAILS)
PR 10' PCC APPROACH SHLD W/ 5" CONCRETE SHLD CURB (STD 609001)
PR 6' HMA SHLDS.
PR GUARDRAIL (SEE SCHEDULE)
PR STONE DUMPED RIPRAP, CLASS A4
909+00.00 150.00' RT
910+00.00 340.00' RT
915+00.00 340.00' RT
916+00.00 100.00' RT
STA 913+26.00 (25° SKEW - RT FWD) PR BRIDGE (SN 009-0510) (1820'-0" BK TO BK OF ABUTMENTS 39'-2' OUT TO OUT, DECK WIDTH) (SEE DETAILS)
PR STONE DUMPED RIPRAP, CLASS A5
SMALL RIVER BANK LEVEE
NORTH BANK ℄
SOUTH BANK ℄

1. STA 903+77, 15' LT
   PR INLET, TYPE C (STD 609006)
   TOG = 471.45
   INV = 469.20
2. PR STORM SEWER, 12" X 34'
   RCCP, TYPE 1
   +77, 15' LT USFL = 469.20
   +89, 15' RT DSFL = 469.03
3. STA 903+89, 15' RT
   PR INLET, TYPE C (STD 609006)
   TOG = 471.54
   INV = 469.03
4. PR PIPE CULVERT, 12" X 10'
   CS/A, TYPE 1
   +89, 15' RT USFL = 469.03
   +89, 25' RT DSFL = 468.95
   1-METAL END SECTION 12" (STD 542401)

STA. 902+00 - 911+00
STA. 912+15 - 914+30
PR TREE REMOVAL= 9.45 AC.
NOTE:
1) MEASURED FROM ROW LINE TO ROW LINE
2) SAVE AS MANY TREES AS POSSIBLE

• CASS AND MASON COUNTIES

FILE NAME = c:\pw_work\PWIDOT\LAUGHLINRL\d0134498\plansheets50scale-5.dgn	USER NAME = laughlinrl	DESIGNED -	REVISED -
		DRAWN -	REVISED -
	PLOT SCALE = 100.0000 ' / IN.	CHECKED -	REVISED -
	PLOT DATE = Mar-31-2009 07:51:26AM	DATE -	REVISED -

STATE OF ILLINOIS
DEPARTMENT OF TRANSPORTATION

PLAN VIEW

SCALE: | SHEET NO. 5 OF 8 SHEETS | STA. 902+00 TO STA. 917+00

F.A.P RTE.	SECTION	COUNTY	TOTAL SHEETS	SHEET NO.
614	144(B-1,B-2)	•	351	60

CONTRACT NO. 72A76

FED. ROAD DIST. NO. | ILLINOIS | FED. AID PROJECT

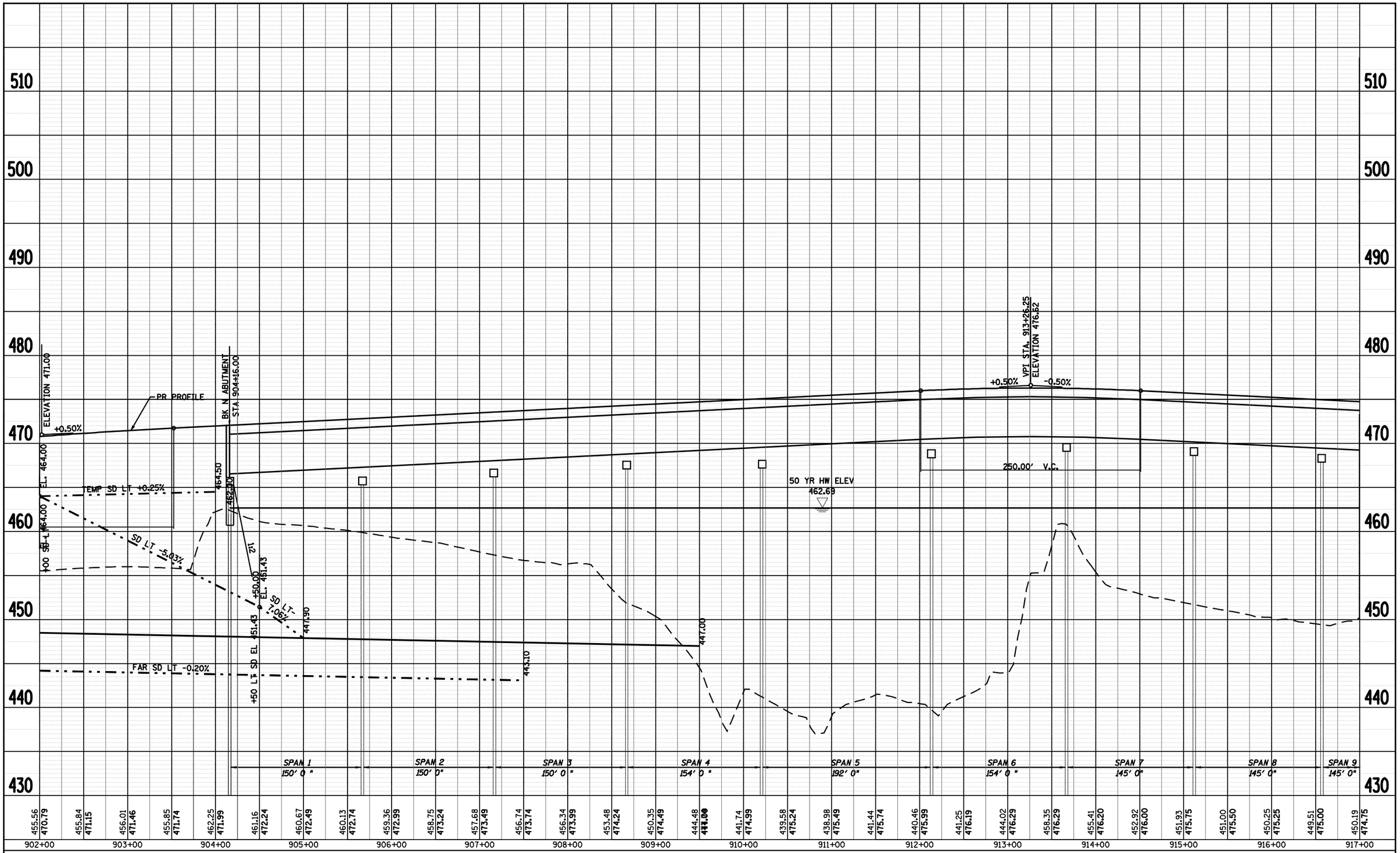

PLAN	BY	DATE
SURVEYED		
PLOTTED		
ALIGNMENT CHECKED		
RT. OF WAY CHECKED		
CADD FILE NAME		
NOTE BOOK NO.		

PROFILE	BY	DATE
SURVEYED		
PLOTTED		
GRADES CHECKED		
B.M. NOTED		
STRUCTURE NOTATNS CHKD		
NOTE BOOK NO.		

FILE NAME =
c:\pw_work\PWIDOT\LAUGHLINRL\d0134498\proprp001_50scalesheets-5.dgn

USER NAME = laughlinrl	DESIGNED - JCN	REVISED -	
	DRAWN - JJB	REVISED -	
PLOT SCALE = 100.0000 ' / IN.	CHECKED - VJM	REVISED -	
PLOT DATE = Mar-31-2009 07:51:29AM	DATE - 08/2007	REVISED -	

STATE OF ILLINOIS
DEPARTMENT OF TRANSPORTATION

PROFILE

SCALE: 1"=100' | SHEET NO. 5 OF 8 SHEETS | STA. 902+00 TO STA. 917+00

F.A.P RTE.	SECTION	COUNTY	TOTAL SHEETS	SHEET NO.
614	144(B-1,B-2)	CASS, MASON	351	61
	IL 78	CONTRACT NO. 72A76		
FED. ROAD DIST. NO.	ILLINOIS	FED. AID PROJECT		

DEVICE ASSOCIATES
CORP OF NY
PARCEL N06246120 D & E

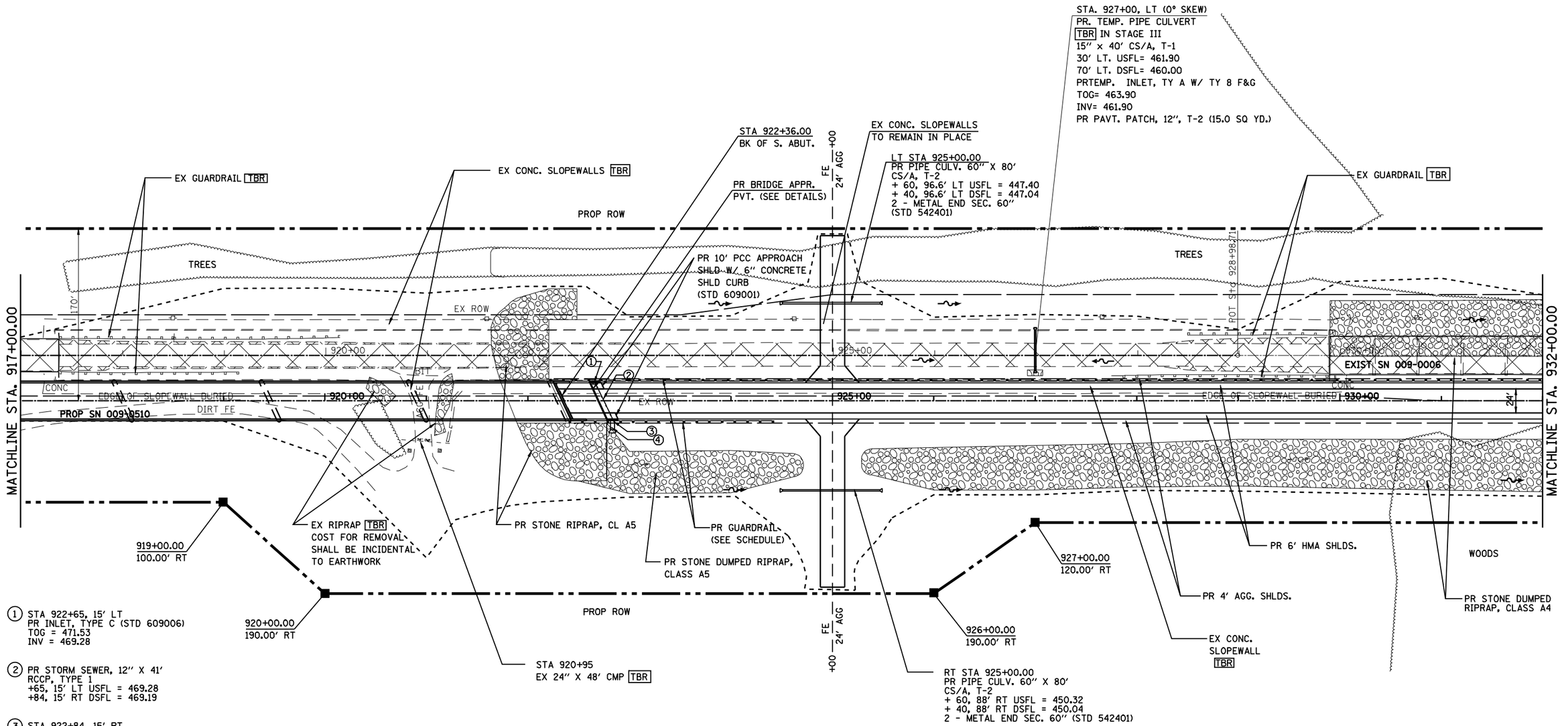

① STA 922+65, 15' LT
PR INLET, TYPE C (STD 609006)
TOG = 471.53
INV = 469.28

② PR STORM SEWER, 12" X 41'
RCCP, TYPE 1
+65, 15' LT USFL = 469.28
+84, 15' RT DSFL = 469.19

③ STA 922+84, 15' RT
PR INLET, TYPE C (STD 609006)
TOG = 471.44
INV = 469.19

④ PR PIPE DRAIN, 12" X 11'
CS/A, TYPE 1
+84, 18' RT USFL = 469.19
+84, 29' RT DSFL = 468.97
1-METAL END SEC, 12" (STD 542401)
NOTE: OUTLET ONTO PR RIPRAP SWALE (SEE DETAILS)

DEVICE ASSOCIATES
CORP OF NY
PARCEL N06246120C

STA. 920+30 - 920+80
STA. 930+50 - 932+00
PR TREE REMOVAL= 1.31 AC.
NOTE:
1) MEASURED FROM
ROW LINE TO ROW LINE
2) SAVE AS MANY TREES
AS POSSIBLE

• CASS AND MASON COUNTIES

FILE NAME = c:\pw_work\PWIDOT\LAUGHLINRL\d0134498\plansheets50scale-6.dgn	USER NAME = laughlinrl	DESIGNED -	REVISED -
		DRAWN -	REVISED -
	PLOT SCALE = 100.0000 ' / IN.	CHECKED -	REVISED -
	PLOT DATE = Mar-31-2009 07:51:32AM	DATE -	REVISED -

STATE OF ILLINOIS
DEPARTMENT OF TRANSPORTATION

PLAN VIEW

SCALE: | SHEET NO. 6 OF 8 SHEETS | STA. 917+00 TO STA. 932+00

F.A.P RTE.	SECTION	COUNTY	TOTAL SHEETS	SHEET NO.
614	144(B-1,B-2)	•	351	62

CONTRACT NO. 72A76

FED. ROAD DIST. NO. | ILLINOIS | FED. AID PROJECT

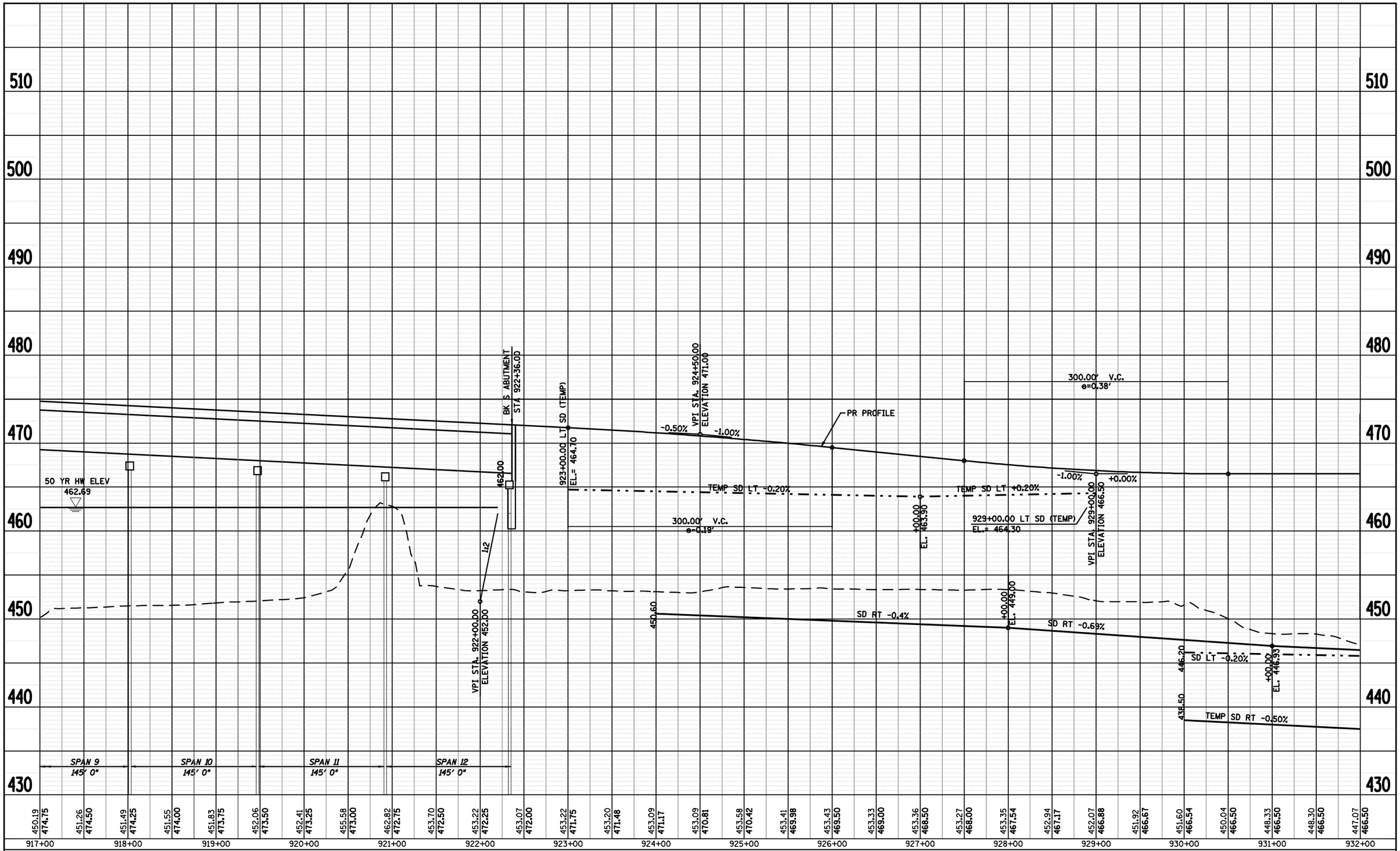

PLAN
SURVEYED
PLOTTED
ALIGNMENT CHECKED
RT. OF WAY CHECKED
CADD FILE NAME
NOTE BOOK
NO.
BY
DATE

PROFILE
SURVEYED
PLOTTED
GRADES CHECKED
B.M. NOTED
STRUCTURE NOTATNS CHKD
NOTE BOOK
NO.
BY
DATE

FILE NAME = c:\pw_work\PWIDOT\LAUGHLINRL\d0134498\proprp001_50scalesheets-6.dgn	USER NAME = laughlinrl	DESIGNED - JCN	REVISED -	STATE OF ILLINOIS DEPARTMENT OF TRANSPORTATION	PROFILE
		DRAWN - JJB	REVISED -		
	PLOT SCALE = 100.0000 ' / IN.	CHECKED - VJM	REVISED -		
	PLOT DATE = Mar-31-2009 07:51:35AM	DATE - 08/2007	REVISED -		SCALE: 1"=100' SHEET NO. 6 OF 8 SHEETS STA. 917+00 TO STA. 932+00

F.A.P RTE.	SECTION	COUNTY	TOTAL SHEETS	SHEET NO.
614	144(B-1,B-2)	CASS, MASON	351	63
	IL 78	CONTRACT NO. 72A76		
FED. ROAD DIST. NO.	ILLINOIS	FED. AID PROJECT		

DEVICE ASSOCIATES
CORP OF NY
PARCEL N06246120 A & B

VILLAGE OF CHANDLERVILLE
PARCEL NO. 6246119 A & B

N

50 0 25 50 100
SCALE IN FEET

PROP. CURVE 34008
PI STA. = 939+29.82
Δ = 2° 20′ 00″ (LT)
D = 0° 22′ 55″
R = 15,000.00′
T = 305.47′
L = 610.86′
E = 3.11′
e = N.C.
T.R. = N/A
S.E. RUN = N/A
P.C. STA. = 936+24.34
P.T. STA. = 942+35.21

STA. 939+00, LT (0° SKEW)
PR. TEMP. PIPE CULVERT
TBR IN STAGE III
15″ x 40′ CS/A, T-1
26′ LT. USFL= 461.30
66′ LT. DSFL= 460.00
PR TEMP. INLET, TY A W/ TY 8 F&G
TOG= 463.30
INV= 461.30
PR PAVT. PATCH, 12″, T-2 (15.0 SQ YD.)

WOODS

LT STA 934+50
EX CMP 36″ X 30′
TBR

EX RIPRAP TBR
COST FOR REMOVAL
SHALL BE INCIDENTAL
TO EARTHWORK

935+96.66
170.00′ LT

STA 932+85
EX SN 009-0006 TO BE REMOVED
(STRUCTURE NO. 3)

937+00.00
140.00′ LT

EX GUARDRAIL
TBR

936+24.34
105.00′ LT

PR GUARDRAIL
(SEE SCHEDULE)

942+35.21
140.00′ LT

944+00.00
120.00′ LT

PROP ROW

936+80.00
104.90′ LT

PT Sta 942+35.21

MATCHLINE STA. 932+00.00

MATCHLINE STA. 947+00.00

EX ROW

SN 009-0006

STA 942+50 TO STA 944+00
TRANS. HMA SHLD
WIDTH FROM 6′ TO 3′

POND

940+00.00
80.00′ RT

942+35.21
80.00′ RT

PR 3′ HMA SHLDS.

PR 4′ AGG. SHLDR.

939+00.00
140.00′ RT

934+00.00
120.00′ RT

935+00.00
140.00′ RT

936+24.34
140.00′ RT

PC Sta 936+24.34

STA 944+11.52 TO STA 947+59.2
PR RELOCATED PAVEMENT
CONNECTOR #2
SEE SHEET 69 FOR DETAIL

PR STONE DUMPED
RIPRAP, CLASS A4

PR 6′ HMA SHLDS.

PR 4′ AGG. SHLDS.

STA 935+35.00 (0° SKEW)
PR 10′ W X 10′ H R.C. BOX CULVERT
(SEE DETAILS) SN 009-2509

STA. 932+00 TO STA 934+60
STA 936+50 TO STA 937+50
STA 938+00 TO STA 940+70
PR TREE REMOVAL= 5.05 AC.
NOTE:
1) MEASURED FROM
ROW LINE TO ROW LINE
2) SAVE AS MANY TREES
AS POSSIBLE

DEVICE ASSOCIATES
CORP OF NY
PARCEL N06246120 A & B

RICHARD B. AND FREDA BROWN
PARCEL NO. 6246118

• CASS AND MASON COUNTIES

FILE NAME = c:\pw_work\PWIDOT\LAUGHLINRL\d0134498\plansheets50scale-7.dgn	USER NAME = laughlinrl	DESIGNED -	REVISED -	STATE OF ILLINOIS DEPARTMENT OF TRANSPORTATION	PLAN VIEW	F.A.P RTE.	SECTION	COUNTY	TOTAL SHEETS / SHEET NO.
	PLOT SCALE = 100.0000 ′ / IN.	DRAWN -	REVISED -			614	144(B-1,B-2)	•	351 / 64
	PLOT DATE = Mar-31-2009 07:51:38AM	CHECKED -	REVISED -					CONTRACT NO. 72A76	
		DATE -	REVISED -		SCALE: / SHEET NO. 7 OF 8 SHEETS / STA. 932+00 TO STA. 947+00	FED. ROAD DIST. NO.	ILLINOIS	FED. AID PROJECT	

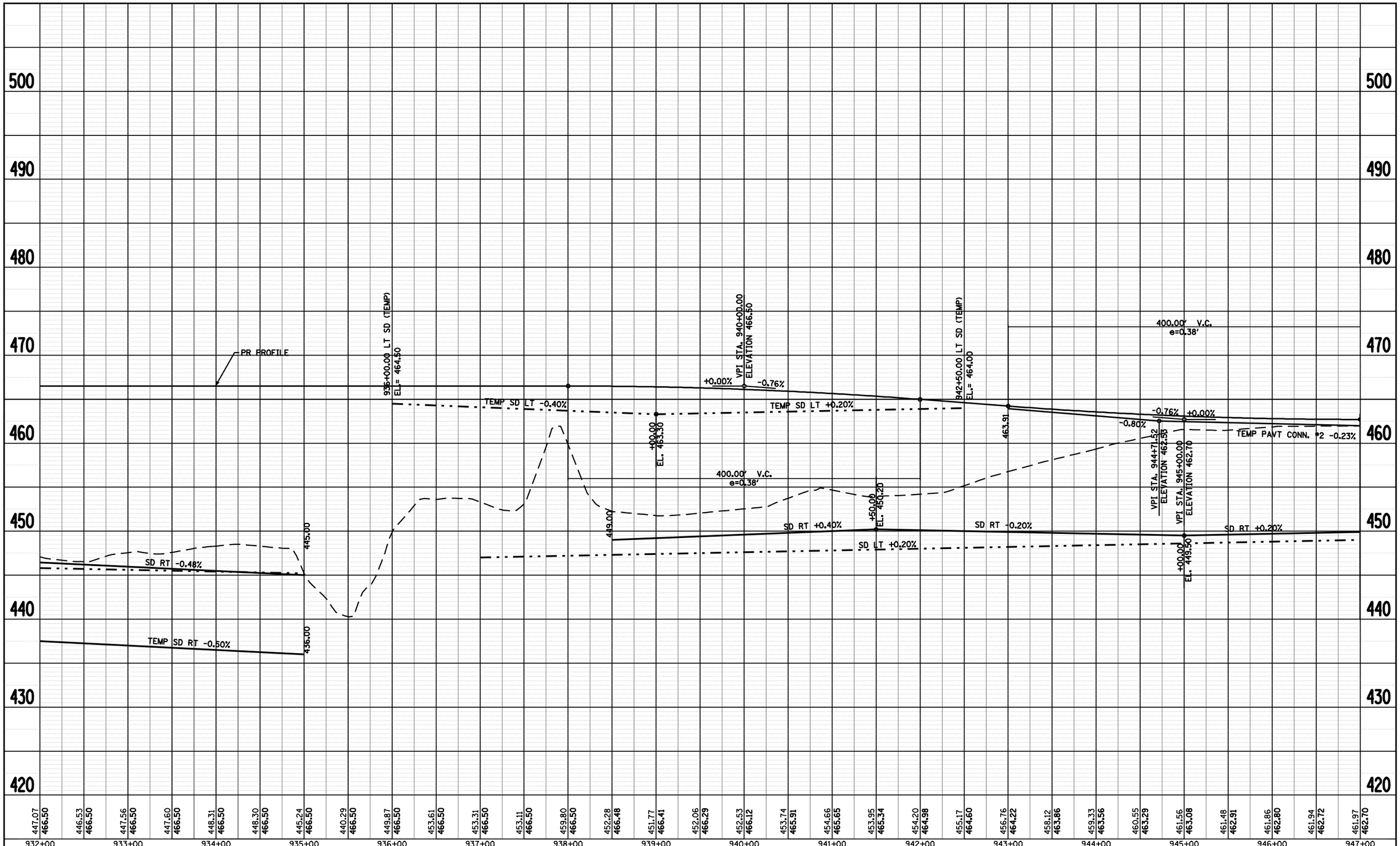

PLAN	BY	DATE
SURVEYED		
PLOTTED		
ALIGNMENT CHECKED		
RT. OF WAY CHECKED		
CADD FILE NAME		
NOTE BOOK NO.		

PROFILE	BY	DATE
SURVEYED		
PLOTTED		
GRADES CHECKED		
BM. NOTED		
STRUCTURE NOTATNS CHKD		
NOTE BOOK NO.		

FILE NAME = c:\pw_work\PWIDOT\LAUGHLINRL\d0134498\prcprp001_50scalesheets-7.dgn	USER NAME = laughlinrl	DESIGNED - JCN	REVISED -
		DRAWN - JJB	REVISED -
	PLOT SCALE = 100.0000 ' / IN.	CHECKED - VJM	REVISED -
	PLOT DATE = Mar-31-2009 07:51:41AM	DATE - 08/2007	REVISED -

STATE OF ILLINOIS
DEPARTMENT OF TRANSPORTATION

PROFILE

SCALE: 1"=100' | SHEET NO. 7 OF 8 SHEETS | STA. 932+00 TO STA. 947+00

F.A.P RTE.	SECTION	COUNTY	TOTAL SHEETS	SHEET NO.
614	144(B-1,B-2)	CASS, MASON	351	65
	IL 78	CONTRACT NO. 72A76		
FED. ROAD DIST. NO.	ILLINOIS	FED. AID PROJECT		

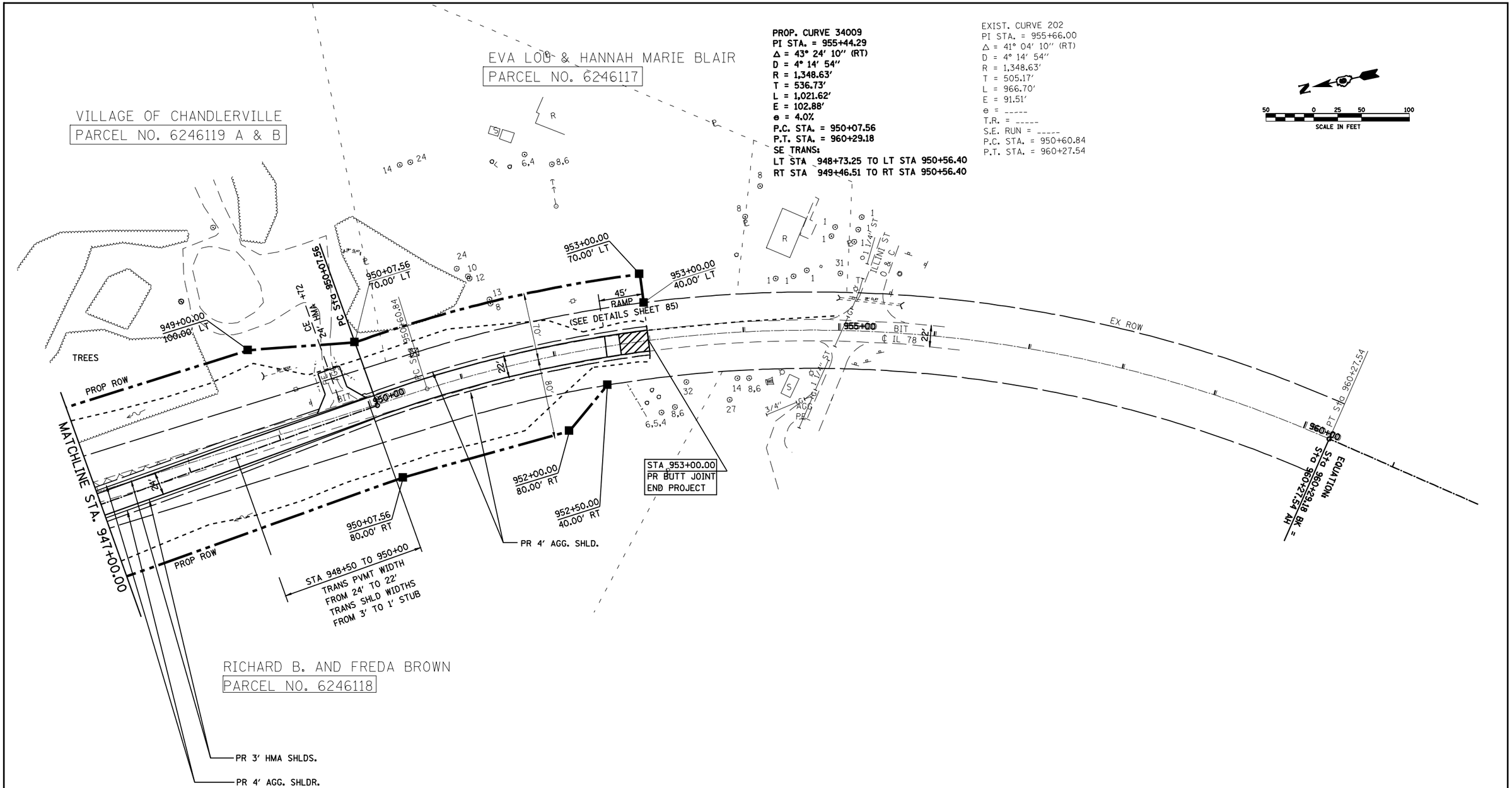

• CASS AND MASON COUNTIES

FILE NAME = c:\pw_work\PWIDOT\LAUGHLINRL\d0134498\plansheets50scale-8.dgn	USER NAME = laughlinrl	DESIGNED -	REVISED -	STATE OF ILLINOIS DEPARTMENT OF TRANSPORTATION	PLAN VIEW	F.A.P RTE.	SECTION	COUNTY	TOTAL SHEETS	SHEET NO.
		DRAWN -	REVISED -			614	144(B-1,B-2)	•	351	66
	PLOT SCALE = 100.0000 ' / IN.	CHECKED -	REVISED -					CONTRACT NO. 72A76		
	PLOT DATE = Mar-31-2009 07:51:44AM	DATE -	REVISED -		SCALE: / SHEET NO. 8 OF 8 SHEETS / STA. 947+00 TO STA. 955+00	FED. ROAD DIST. NO.	ILLINOIS	FED. AID PROJECT		

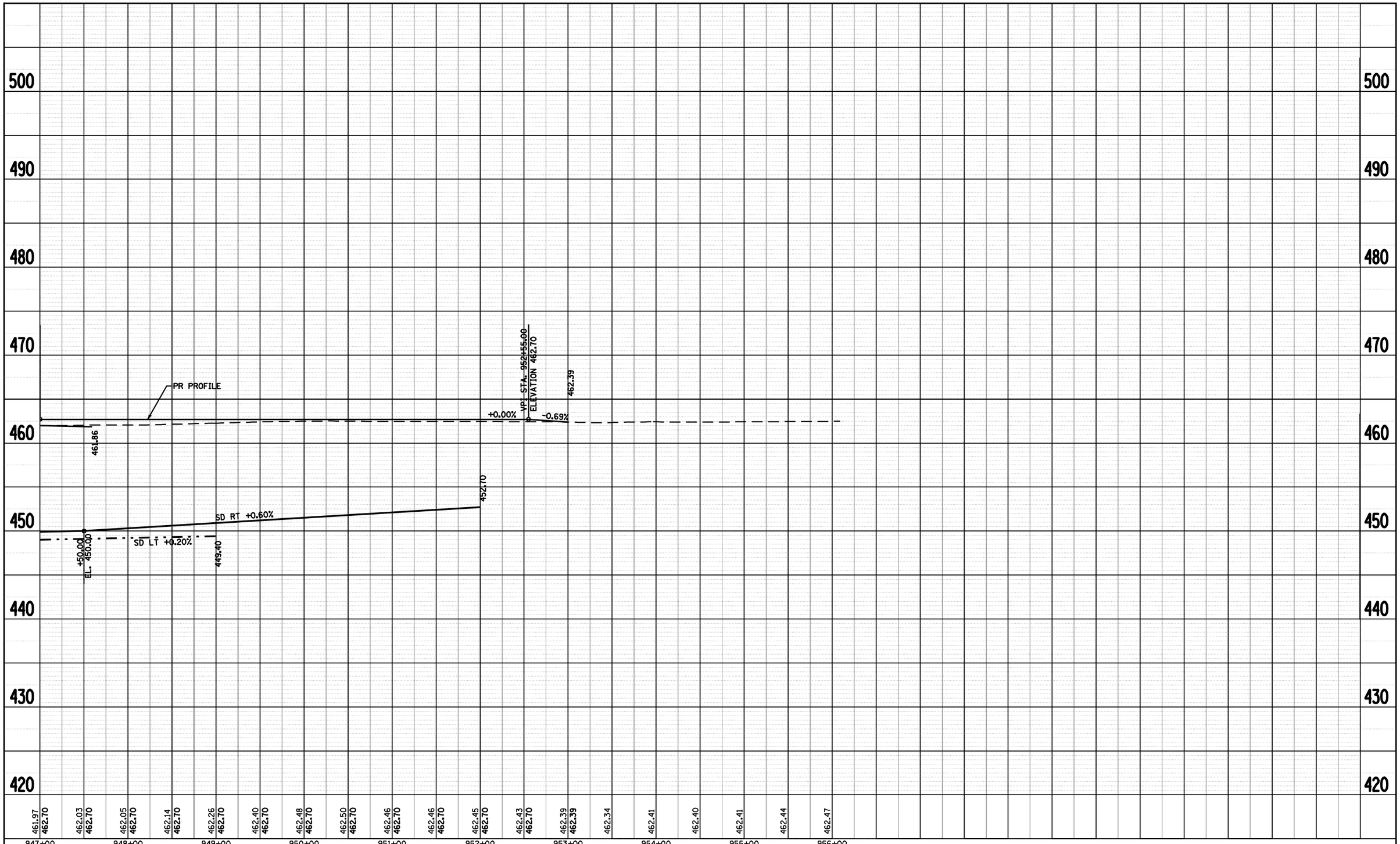

PLAN		BY	DATE
NOTE BOOK NO. ____	SURVEYED PLOTTED ALIGNMENT CHECKED RT. OF WAY CHECKED CADD FILE NAME		

PROFILE		BY	DATE
NOTE BOOK NO. ____	SURVEYED PLOTTED GRADES CHECKED B.M. NOTED STRUCTURE NOTAT'NS CHKD		

FILE NAME = c:\pw_work\PWIDOT\LAUGHLINRL\d0134498\proprp001_50scalesheets-8.dgn	USER NAME = laughlinrl	DESIGNED - JCN	REVISED -
		DRAWN - JJB	REVISED -
	PLOT SCALE = 100.0000 ' / IN.	CHECKED - VJM	REVISED -
	PLOT DATE = Mar-31-2009 07:51:46AM	DATE - 08/2007	REVISED -

STATE OF ILLINOIS
DEPARTMENT OF TRANSPORTATION

PROFILE

SCALE: 1"=100' | SHEET NO. 8 OF 8 SHEETS | STA. 947+00 TO STA. 956+00

F.A.P RTE.	SECTION	COUNTY	TOTAL SHEETS	SHEET NO.
614	144(B-1,B-2)	CASS, MASON	351	67
	IL 78	CONTRACT NO. 72A76		
FED. ROAD DIST. NO.	ILLINOIS	FED. AID PROJECT		

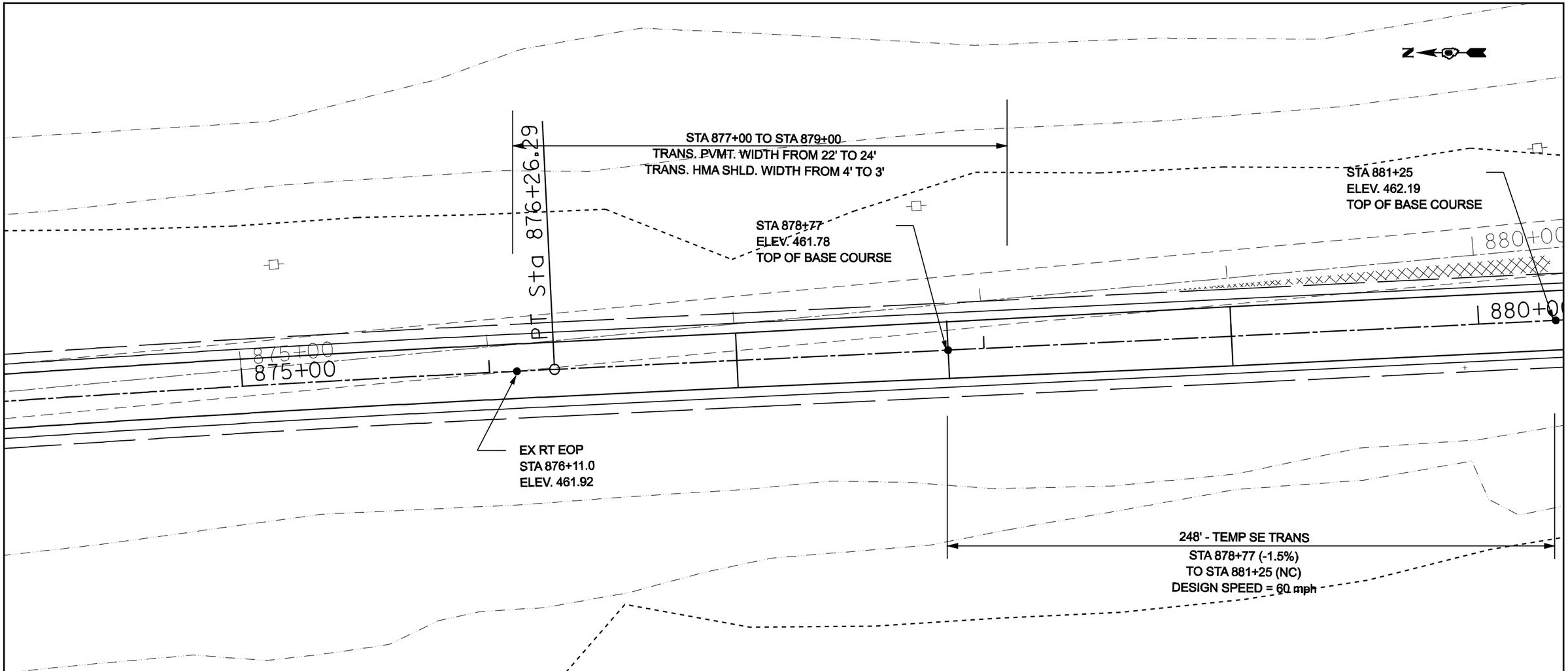

TRANSITIONAL TOP OF BASE COURSE ELEVATIONS

STATION	EX RT EOP	PR CL - TOP OF BASE COURSE EL	PR LT EOP - BASE COURSE EL	PR RT EOP - TOP OF BASE COURSE EL
876+11	461.92	461.92	--	461.74
876+50	461.93	461.90	--	461.72
877+00	461.95	461.87	--	461.69
877+50	462.08	461.84	--	461.66
878+00	462.01	461.82	--	461.64
878+50	461.97	461.79	--	461.61
878+77	461.96	461.78	461.96	461.60
879+00	461.95	461.81	461.96	461.63
879+50	461.87	461.90	461.97	461.72
880+00	461.84	461.98	461.98	461.80
880+50	461.88	462.06	461.99	461.88
881+00	461.90	462.14	462.00	461.96
881+25	461.91	462.19	462.01	462.01

NOTE:
TEMP - TOP OF BASE COURSE PROFILE SHOWN ON PROFILE SHEETS FOR PVMT CONN #1

SEE TYPICAL SECTION #6 (SHEET 19) FOR PAVEMENT STRUCTURE INFORMATION

D-96-506-07

FILE NAME = c:\pw_work\PWIDOT\LAUGHLINRL\d0134498\pvtconndetails-1.dgn	USER NAME = laughlinrl	DESIGNED -	REVISED -	STATE OF ILLINOIS DEPARTMENT OF TRANSPORTATION	RELOCATED PAVEMENT CONNECTOR #1 DETAILS	F.A.P RTE.	SECTION	COUNTY	TOTAL SHEETS / SHEET NO.
		DRAWN -	REVISED -			614	144(B-1, B-2)	CASS, MASON	351 / 68
	PLOT SCALE = 40.0000 ' / IN.	CHECKED -	REVISED -					CONTRACT NO. 72A76	
	PLOT DATE = Mar-31-2009 07:51:50AM	DATE -	REVISED -		SCALE: SHEET NO. 1 OF 1 SHEETS STA. TO STA.	FED. ROAD DIST. NO.	ILLINOIS	FED. AID PROJECT	

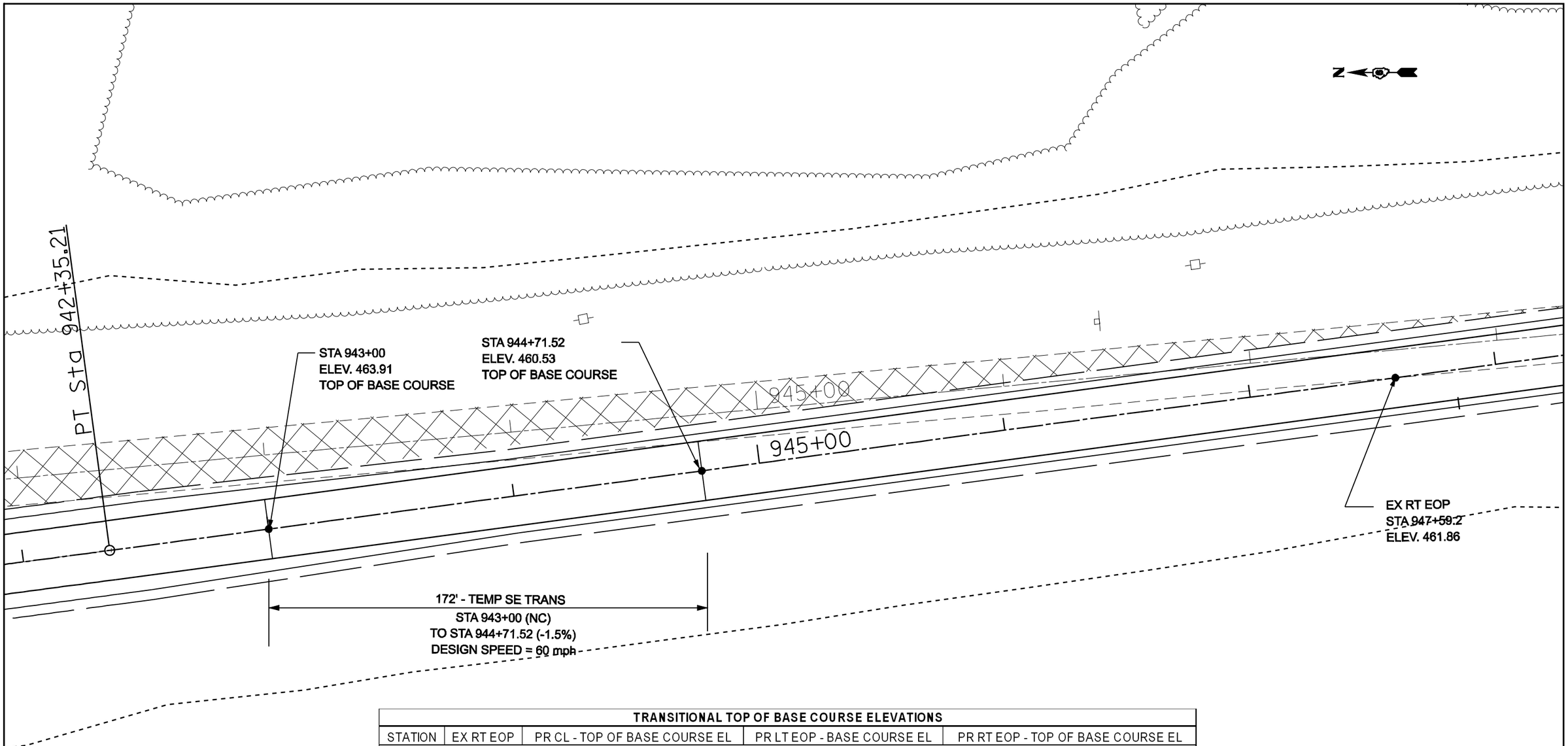

TRANSITIONAL TOP OF BASE COURSE ELEVATIONS

STATION	EX RT EOP	PR CL - TOP OF BASE COURSE EL	PR LT EOP - BASE COURSE EL	PR RT EOP - TOP OF BASE COURSE EL
943+00	463.57	463.91	463.73	463.73
943+50	463.31	463.51	463.43	463.33
944+00	463.11	463.11	463.14	462.93
944+50	462.83	462.7	462.83	462.52
944+71.52	462.71	462.53	462.71	462.35
945+00	462.62	462.46	---	462.28
945+50	462.46	462.35	--	462.17
946+00	462.31	462.23	--	462.05
946+50	462.20	462.11	--	461.93
947+00	462.10	462	--	461.82
947+50	462.05	461.88	--	461.70
947+59.2	461.86	461.86	--	461.68

NOTE:

TEMP - TOP OF BASE COURSE PROFILE SHOWN ON PROFILE SHEETS FOR PVMT CONN #2

SEE TYPICAL SECTION #6 (SHEET 19) FOR PAVEMENT STRUCTURE INFORMATION

~~D-98-506-07~~

FILE NAME = c:\pw_work\PWIDOT\LAUGHLINRL\d0134498\pvtconndetails-2.dgn	USER NAME = laughlinrl	DESIGNED -	REVISED -	STATE OF ILLINOIS DEPARTMENT OF TRANSPORTATION	RELOCATED PAVEMENT CONNECTOR #2 DETAIL	F.A.P RTE.	SECTION	COUNTY	TOTAL SHEETS	SHEET NO.
		DRAWN -	REVISED -			614	144(B-1, B-2)	CASS, MASON	351	69
	PLOT SCALE = 40.0000 ' / IN.	CHECKED -	REVISED -					CONTRACT NO. 72A76		
	PLOT DATE = Mar-31-2009 07:51:57AM	DATE -	REVISED -		SCALE: SHEET NO. 1 OF 1 SHEETS STA. TO STA.	FED. ROAD DIST. NO.	ILLINOIS	FED. AID PROJECT		

PROP. CURVE BR01
PI STA. = 1+02.00
Δ = 90° 00′ 00″ (RT)
D = 143° 14′ 22″
R = 40.00′
T = 40.00′
L = 62.83′
E = 16.57′
e = 1.5%
P.C. STA. = 0+62.00
P.T. STA. = 1+24.83
SLOPE TRANSITION:
RT STA 0+52.00 (-1.50%) TO RT STA 1+35.00 (+1.50%)

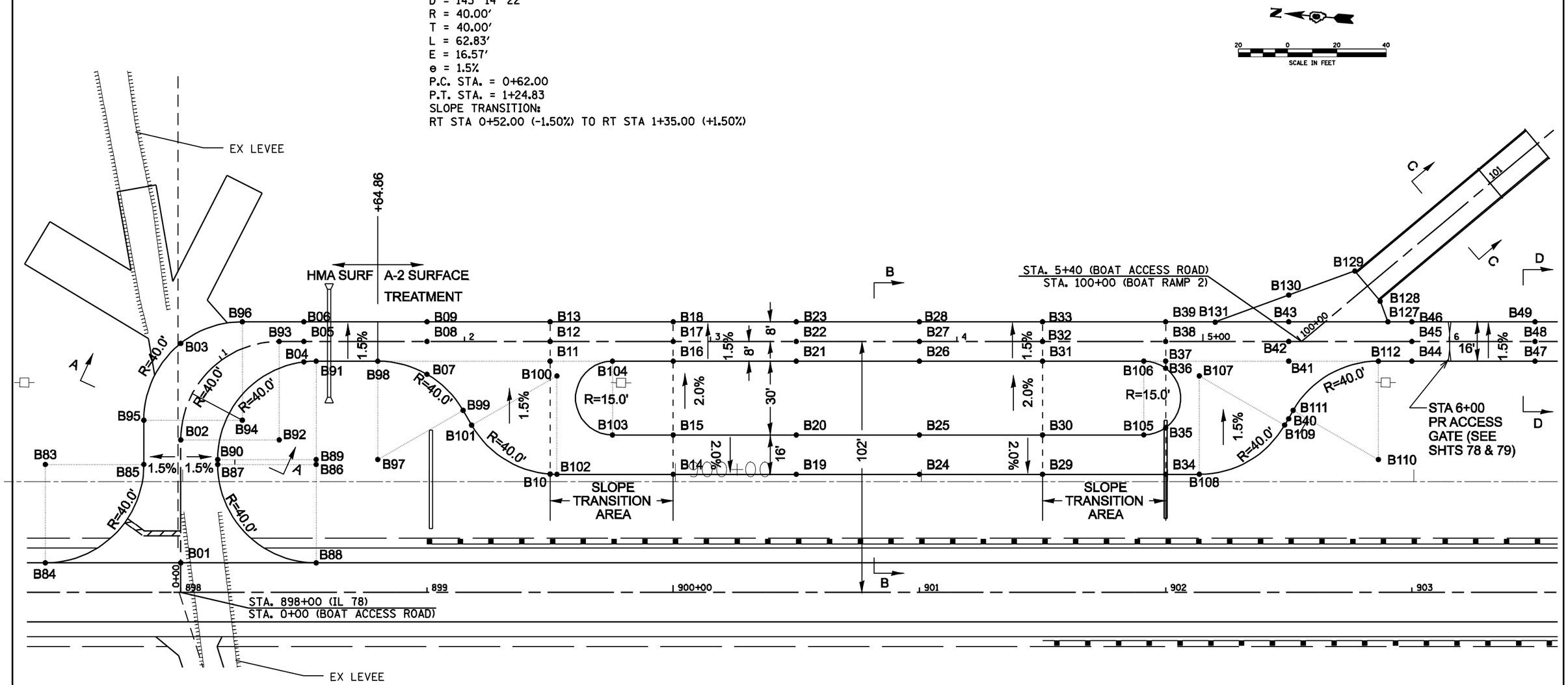

NOTE: UTILITY POLES ARE SHOWN IN LOCATIONS BASED ON SURVEY DATA. IF THERE ARE TIE-DOWNS OR ITEMS THAT AFFECT ACCESS ROAD LAYOUT, CONTACT STUDIES AND PLANS.

D-96-506-07

FILE NAME = c:\pw_work\PWIDOT\LAUGHLINRL\d0134498\sht prbtrmpdetail.dgn	USER NAME = laughlinrl	DESIGNED -	REVISED -	STATE OF ILLINOIS DEPARTMENT OF TRANSPORTATION	BOAT RAMP LAYOUT	F.A.P RTE.	SECTION	COUNTY	TOTAL SHEETS	SHEET NO.
		DRAWN -	REVISED -			614	144(B-1,B-2)	CASS, MASON	351	70
	PLOT SCALE = 40.0000 ′ / IN.	CHECKED -	REVISED -					CONTRACT NO. 72A76		
	PLOT DATE = Mar-31-2009 07:52:03AM	DATE -	REVISED -		SCALE: / SHEET NO. 1 OF 3 SHEETS / STA. 0+00.00 TO STA. 6+50.00	FED. ROAD DIST. NO.	ILLINOIS	FED. AID PROJECT		

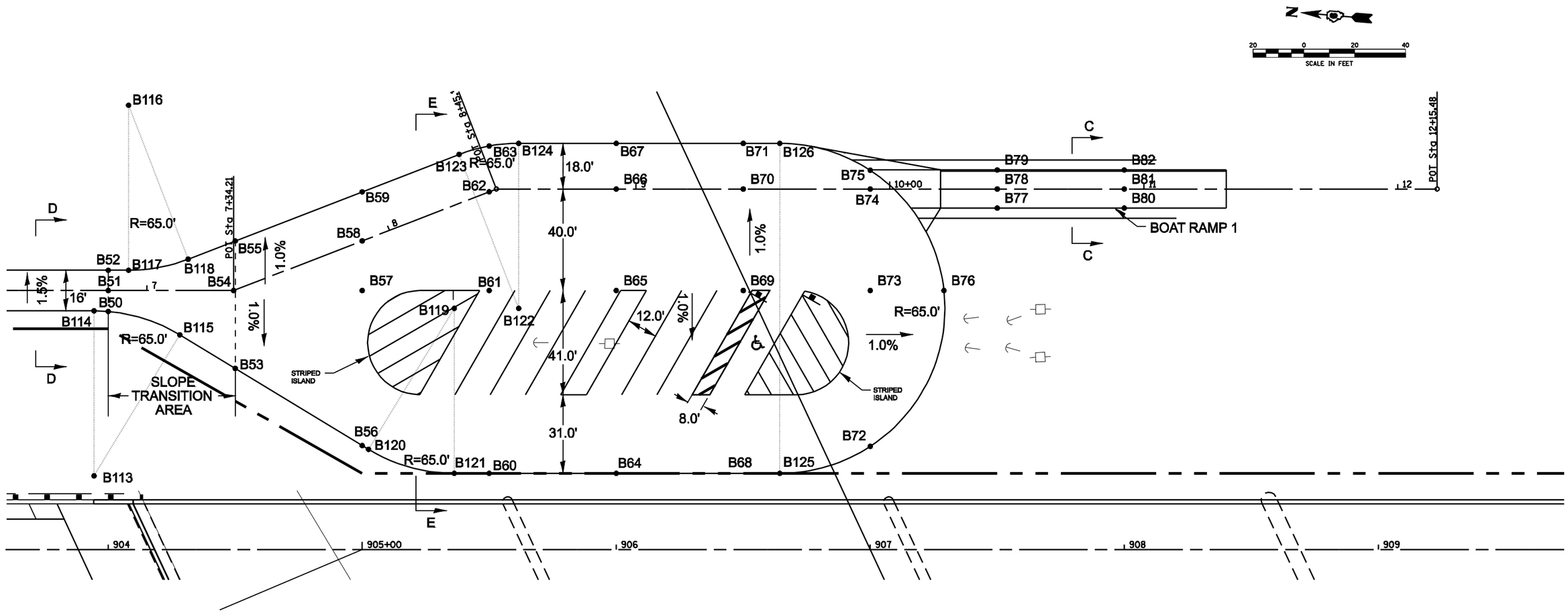

NOTE: UTILITY POLES ARE SHOWN IN LOCATIONS BASED ON SURVEY DATA. IF THERE ARE TIE-DOWNS OR ITEMS THAT AFFECT ACCESS ROAD LAYOUT, CONTACT STUDIES AND PLANS.

IF PARKING AREA SHOWN NEEDS TO BE REVISED TO AVOID UTILITY POLE TIE-DOWNS, CONTACT STUDIES AND PLANS. TIE-DOWNS MAY BE ADJUSTED TO ACCOMMODATE PARKING.

D-96-506-07

FILE NAME = c:\pw_work\PWIDOT\LAUGHLINRL\d0134498\sntprbtrmpdetail.dgn	USER NAME = laughlinrl	DESIGNED -	REVISED -
		DRAWN -	REVISED -
	PLOT SCALE = 40.0000 ' / IN.	CHECKED -	REVISED -
	PLOT DATE = Mar-31-2009 07:52:08AM	DATE -	REVISED -

STATE OF ILLINOIS
DEPARTMENT OF TRANSPORTATION

BOAT RAMP LAYOUT

SCALE: | SHEET NO. 2 OF 3 SHEETS | STA. 6+50.00 TO STA. 12+10.00

F.A.P RTE.	SECTION	COUNTY	TOTAL SHEETS	SHEET NO.
614	144(B-1, B-2)	CASS, MASON	351	71
		CONTRACT NO. 72A76		
FED. ROAD DIST. NO.	ILLINOIS	FED. AID PROJECT		

Point	Station	Offset (LT)	Pr Elevation
B1	898+00	12.0	466.79
B2	898+00	62.0	466.04
B3	898+00	101.2	465.35
B4	898+50	93.5	465.11
B5	898+50	102.0	464.99
B6	898+50	110.0	464.87
B7	899+00	88.8	464.67
B8	899+00	102.0	464.47
B9	899+00	110.0	464.35
B10	899+50	48.0	464.94
B11	899+50	94.0	464.25
B12	899+50	102.0	464.13
B13	899+50	110.0	464.01
B14	900+00	48.0	464.38
B15	900+00	64.0	464.70
B16	900+00	94.0	464.10
B17	900+00	102.0	463.98
B18	900+00	110.0	463.86
B19	900+50	48.0	464.37
B20	900+50	64.0	464.69
B21	900+50	94.0	464.09
B22	900+50	102.0	463.97

Point	Station	Offset (LT)	Pr Elevation
B23	900+50	110.0	463.85
B24	901+00	48.0	464.37
B25	901+00	64.0	464.69
B26	901+00	94.0	464.09
B27	901+00	102.0	463.97
B28	901+00	110.0	463.85
B29	901+50	48.0	464.37
B30	901+50	64.0	464.69
B31	901+50	94.0	464.09
B32	901+50	102.0	463.97
B33	901+50	110.0	463.85
B34	902+00	48.0	464.60
B35	902+00	66.9	464.32
B36	902+00	91.1	463.95
B37	902+00	94.0	463.91
B38	902+00	102.0	463.79
B39	902+00	110.0	463.67
B40	902+50	70.0	463.35
B41	902+50	94.0	462.99
B42	902+50	102.0	462.87
B43	902+50	110.0	462.75
B44	903+00	94.0	461.32

Point	Station	Offset (LT)	Pr Elevation
B45	903+00	102.0	461.20
B46	903+00	110.0	461.08
B47	903+50	94.0	458.89
B48	903+50	102.0	458.77
B49	903+50	110.0	458.65
B50	904+00	93.8	456.10
B51	904+00	102.0	455.98
B52	904+00	110.0	455.86
B53	904+50	71.3	453.79
B54	904+50	102.0	454.09
B55	904+50	121.6	454.07
B56	905+00	41.0	452.67
B57	905+00	102.0	453.27
B58	905+00	121.6	453.09
B59	905+00	140.9	452.85
B60	905+50	30.0	452.69
B61	905+50	102.0	453.36
B62	905+50	140.9	453.00
B63	905+50	159.0	452.82
B64	906+00	30.0	452.68
B65	906+00	102.0	453.40

Point	Station	Offset (LT)	Pr Elevation
B66	906+00	142.0	453.00
B67	906+00	160.0	452.82
B68	906+50	30.0	452.68
B69	906+50	102.0	453.40
B70	906+50	142.0	453.00
B71	906+50	160.0	452.82
B72	907+00	40.6	452.78
B73	907+00	102.0	453.05
B74	907+00	142.0	453.00
B75	907+00	149.4	452.93
B76	907+21	102.0	452.84
B77	907+50	134.5	451.76
B78	907+50	142.0	451.76
B79	907+50	149.5	451.76
B80	908+00	134.5	444.04
B81	908+00	142.0	444.04
B82	908+00	149.5	444.04
B83	897+45	52.0	463.85
B84	897+45	12.0	466.25
B85	897+85	52.0	465.97
B86	898+55	52.0	463.61
B87	898+15	52.0	465.96

Point	Station	Offset (LT)	Pr Elevation
B88	898+55	12.0	467.35
B89	898+55	54.0	463.39
B90	898+15	54.0	465.94
B91	898+55	94.0	465.05
B92	898+40	62.0	462.35
B93	898+40	102.0	465.12
B94	898+25	70.0	465.25
B95	897+85	70.0	465.73
B96	898+25	110.0	465.13
B97	898+80	54.0	463.20
B98	898+80	94.0	464.77
B99	899+14.67	74.0	464.77
B100	899+52.77	88.0	464.33
B101	899+18.13	68.0	464.83
B102	899+52.77	48.0	464.82
B103	899+75.33	64.0	464.68
B104	899+75.33	94.0	464.15
B105	901+91.11	64.0	464.47
B106	901+91.11	94.0	463.99
B107	902+13.68	88.0	463.82
B108	902+13.68	48.0	464.42
B109	902+48.31	68.0	463.43

Point	Station	Offset (LT)	Pr Elevation
B110	902+86.42	54.0	460.14
B111	902+51.78	74.0	463.25
B112	902+86.42	94.0	461.85
B113	903+94.44	29.0	469.05
B114	903+94.44	94.0	456.37
B115	904+28.18	84.6	454.87
B116	904+08.02	175.0	445.84
B117	904+08.02	110.0	455.50
B118	904+31.46	114.4	454.52
B119	905+36.21	95.0	453.26
B120	905+02.48	39.4	452.64
B121	905+36.21	30.0	452.64
B122	905+61.60	95.0	453.33
B123	905+38.15	155.6	452.82
B124	905+61.60	160.0	452.82
B125	906+64.38	30.0	452.68
B126	906+64.38	160.0	452.82
B127	902+90.29	110.0	461.47
B128	902+87.12	118.4	460.99
B129	902+76.84	130.6	460.99
B130	902+50.00	120.9	462.59
B131	902+20.13	109.8	463.39

D-96-506-07

FILE NAME = c:\pw_work\PWIDOT\LAUGHLINRL\d0134498\sntprbtrmpdetail.dgn	USER NAME = laughlinrl	DESIGNED -	REVISED -
		DRAWN -	REVISED -
	PLOT SCALE = 40.0000 ' / IN.	CHECKED -	REVISED -
	PLOT DATE = Mar-31-2009 07:52:13AM	DATE -	REVISED -

STATE OF ILLINOIS
DEPARTMENT OF TRANSPORTATION

BOAT RAMP LAYOUT

SCALE: | SHEET NO. 3 OF 3 SHEETS | STA. | TO STA.

F.A.P RTE.	SECTION	COUNTY	TOTAL SHEETS	SHEET NO.
614	144(B-1, B-2)	CASS, MASON	351	72

CONTRACT NO. 72A76

FED. ROAD DIST. NO. | ILLINOIS | FED. AID PROJECT

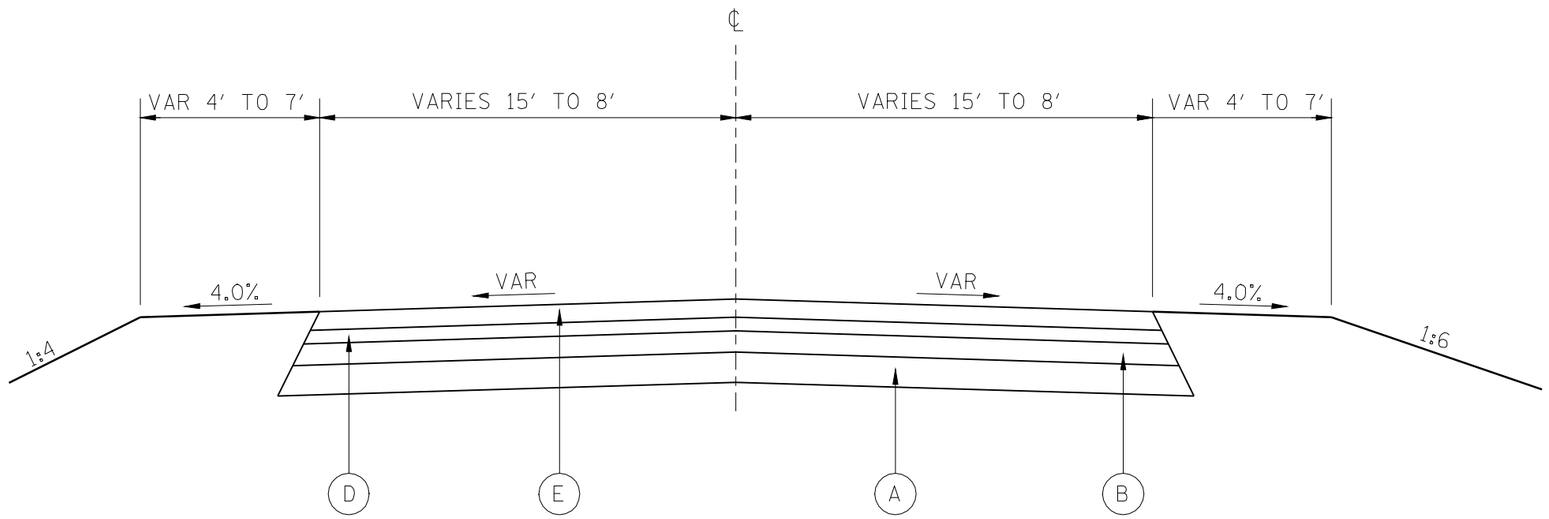

SECTION A-A

(BOAT RAMP ACCESS ROAD)

LEGEND

- (A) PR SUB-BASE GRANULAR MATERIAL, TYPE B, 5″ (CA 02)
- (B) PR AGGREGATE SURFACE COURSE, TYPE A, 3″ (CA 06)
- (C) PR BIT SURFACE, A-2 TREATMENT (BITUMINOUS PRIME COAT, COVER AND SEAL COAT)
- (D) PR HMA BINDER COURSE, 2 1/2″
- (E) PR HMA SURFACE COURSE, 1 1/2″
- (F) PR PAVEMENT FABRIC (STD 420701)
- (G) PR PCC PAVEMENT, SPL., 8″
- (H) PR FILTER FABRIC & 6″ AGGREGATE BEDDING
- (I) PR STONE DUMPED RIPRAP, CLASS A4

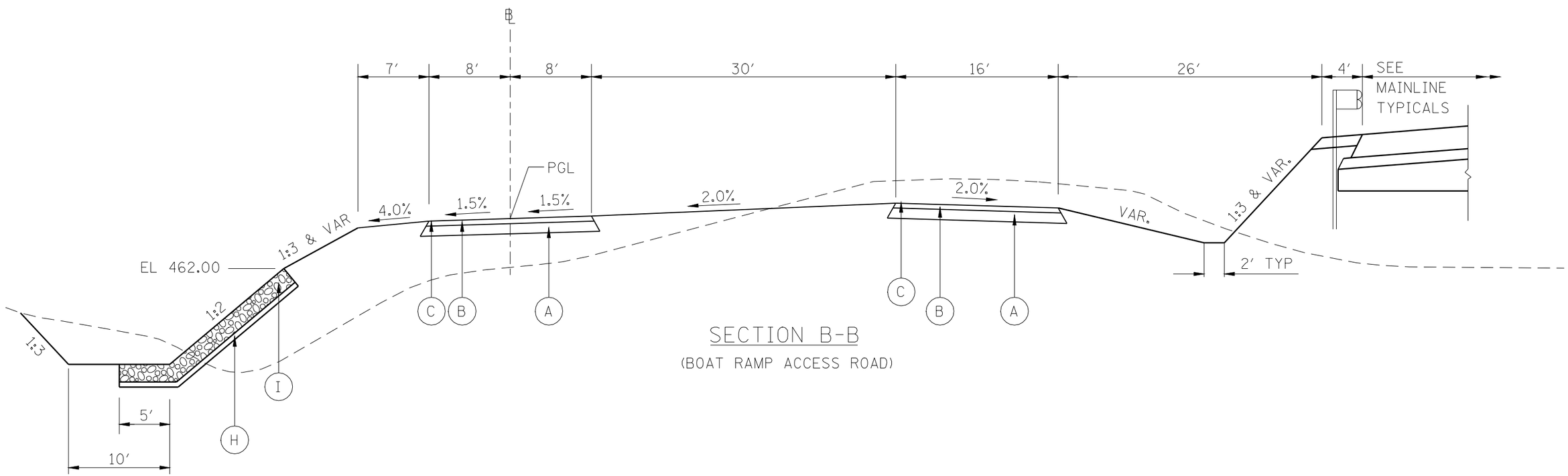

SECTION B-B

(BOAT RAMP ACCESS ROAD)

FILE NAME = c:\pw_work\PWIDOT\LAUGHLINRL\d0134498\sttboattypical.dgn	USER NAME = laughlinrl	DESIGNED -	REVISED -	STATE OF ILLINOIS DEPARTMENT OF TRANSPORTATION	BOAT RAMP TYPICAL SECTIONS	F.A.P RTE.	SECTION	COUNTY	TOTAL SHEETS	SHEET NO.
	PLOT SCALE = 40.0000 ′ / IN.	DRAWN -	REVISED -			614	144(B-1)	CASS, MASON	351	73
	PLOT DATE = Mar-31-2009 07:52:17AM	CHECKED -	REVISED -					CONTRACT NO. 72A76		
		DATE -	REVISED -		SCALE: SHEET NO. 1 OF 3 SHEETS STA. TO STA.	FED. ROAD DIST. NO.	ILLINOIS	FED. AID PROJECT		

The finish of the boat ramp shall provide grooves as shown in Detail below. This finish will provide extra traction at those locations where the rear tires of the tow vehicle contact the ramp. The grooves should be angled downwards to the outside of the ramp to facilitate proper drainage. These grooves should be angled about 30 degrees from the horizontal (i.e., top of ramp).

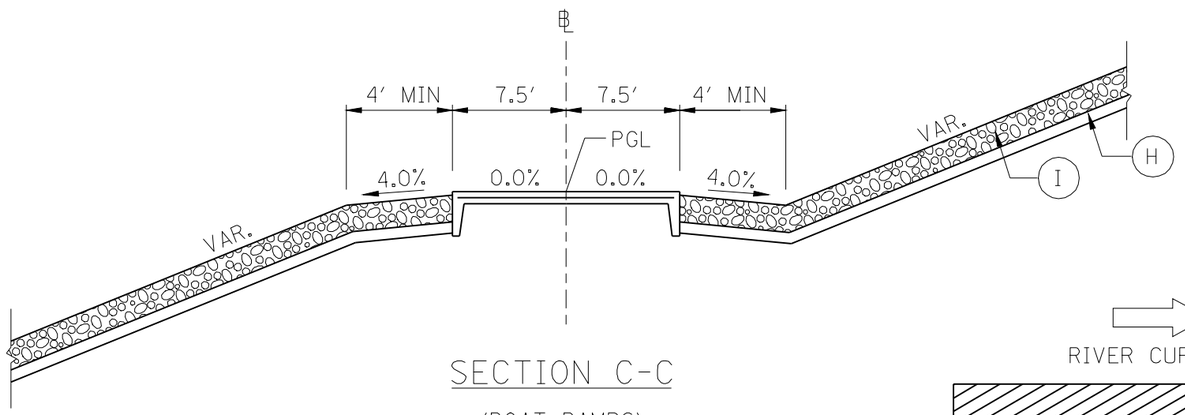

SECTION C-C

(BOAT RAMPS)

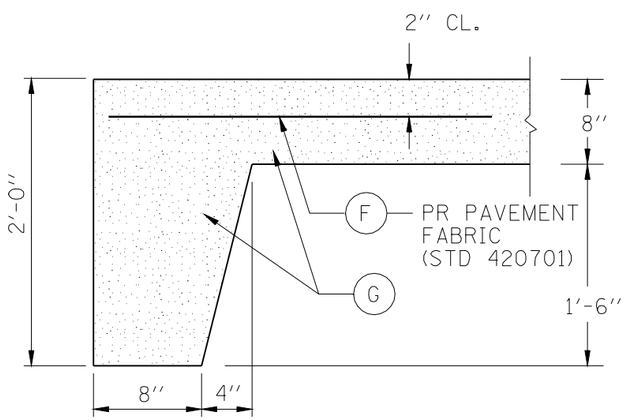

BOAT RAMP

(TOEWALL DETAIL)

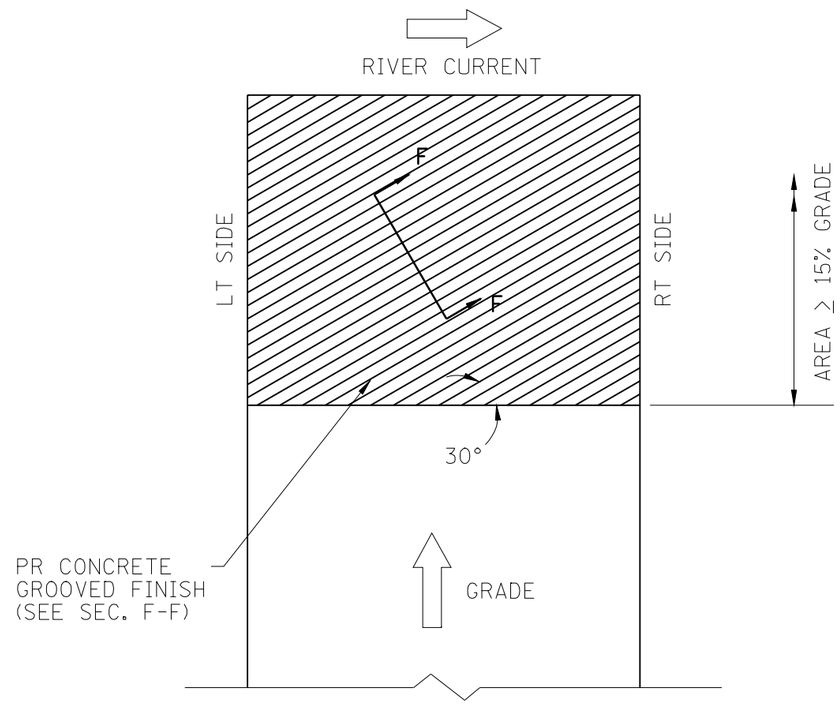

PLAN VIEW

(BOAT RAMP - CONCRETE GROOVED FINISH)

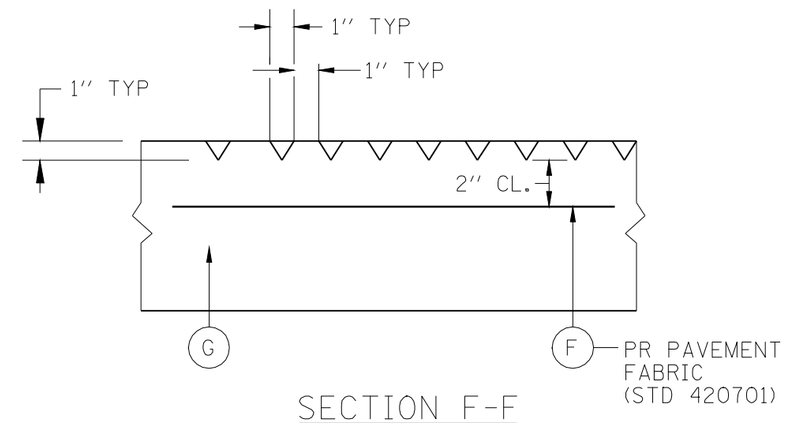

SECTION F-F

(BOAT RAMP - CONCRETE GROOVED FINISH)

LEGEND

- (A) PR SUB-BASE GRANULAR MATERIAL, TYPE B, 5″ (CA 02)
- (B) PR AGGREGATE SURFACE COURSE, TYPE A, 3″ (CA 06)
- (C) PR BIT SURFACE, A-2 TREATMENT (BITUMINOUS PRIME COAT, COVER AND SEAL COAT)
- (D) PR HMA BINDER COURSE, 2 1/2″
- (E) PR HMA SURFACE COURSE, 1 1/2″
- (F) PR PAVEMENT FABRIC (STD 420701)
- (G) PR PCC PAVEMENT, SPL., 8″
- (H) PR FILTER FABRIC & 6″ AGGREGATE BEDDING
- (I) PR STONE DUMPED RIPRAP, CLASS A4

FILE NAME = c:\pw_work\PWIDOT\LAUGHLINRL\d0134498\sttboattypical.dgn	USER NAME = laughlinrl	DESIGNED -	REVISED -	STATE OF ILLINOIS DEPARTMENT OF TRANSPORTATION	BOAT RAMP TYPICAL SECTIONS	F.A.P RTE.	SECTION	COUNTY	TOTAL SHEETS	SHEET NO.
		DRAWN -	REVISED -			614	144(B-1)	CASS, MASON	351	74
	PLOT SCALE = 40.0000 ′ / IN.	CHECKED -	REVISED -					CONTRACT NO. 72A76		
	PLOT DATE = Mar-31-2009 07:52:19AM	DATE -	REVISED -		SCALE: SHEET NO. 2 OF 3 SHEETS STA. TO STA.	FED. ROAD DIST. NO.	ILLINOIS	FED. AID PROJECT		

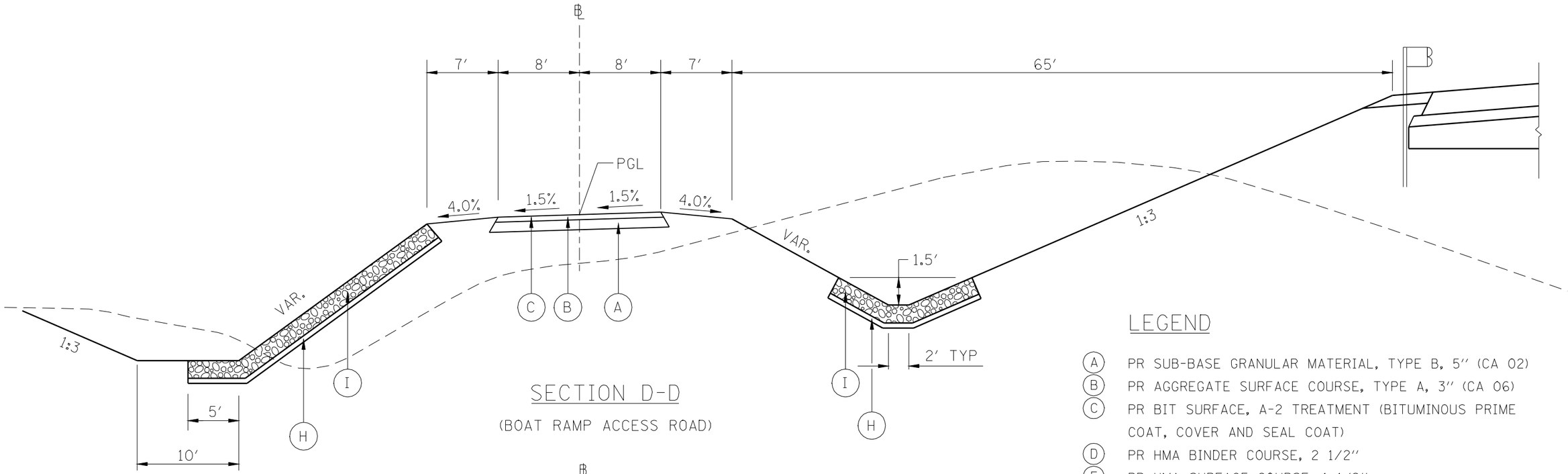

SECTION D-D

(BOAT RAMP ACCESS ROAD)

LEGEND

- (A) PR SUB-BASE GRANULAR MATERIAL, TYPE B, 5″ (CA 02)
- (B) PR AGGREGATE SURFACE COURSE, TYPE A, 3″ (CA 06)
- (C) PR BIT SURFACE, A-2 TREATMENT (BITUMINOUS PRIME COAT, COVER AND SEAL COAT)
- (D) PR HMA BINDER COURSE, 2 1/2″
- (E) PR HMA SURFACE COURSE, 1 1/2″
- (F) PR PAVEMENT FABRIC (STD 420701)
- (G) PR PCC PAVEMENT, SPL., 8″
- (H) PR FILTER FABRIC & 6″ AGGREGATE BEDDING
- (I) PR STONE DUMPED RIPRAP, CLASS A4

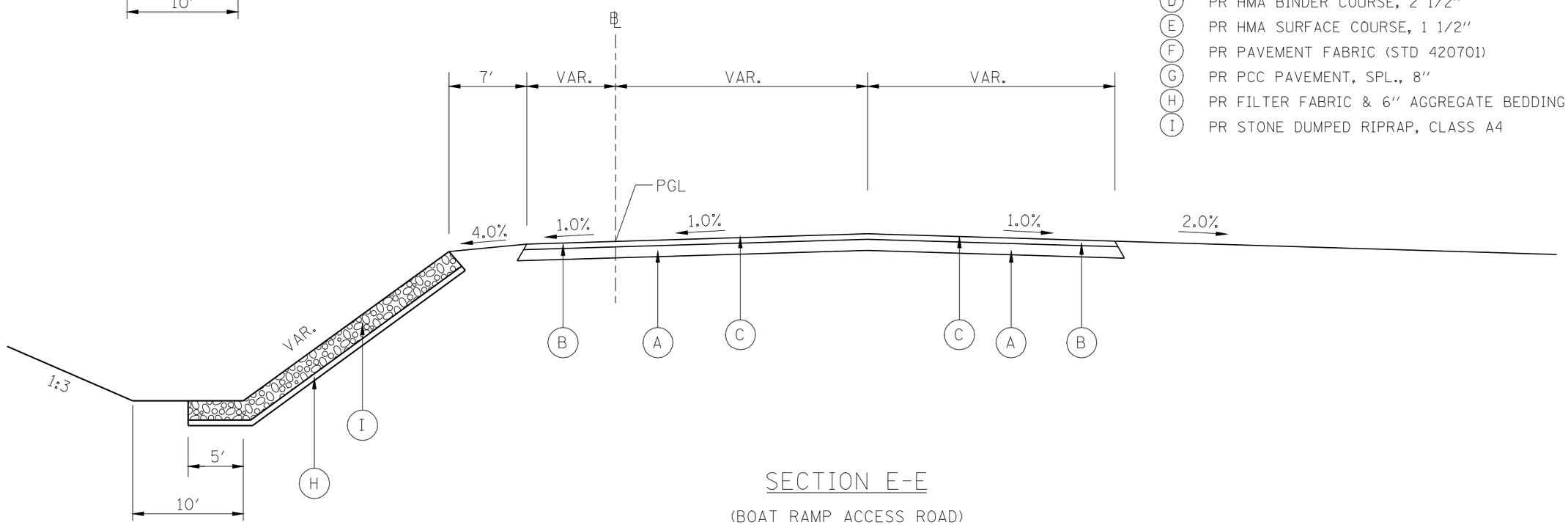

SECTION E-E

(BOAT RAMP ACCESS ROAD)

FILE NAME = c:\pw_work\PWIDOT\LAUGHLINRL\d0134498\sht boattypical.dgn	USER NAME = laughlinrl	DESIGNED -	REVISED -	STATE OF ILLINOIS DEPARTMENT OF TRANSPORTATION	BOAT RAMP TYPICAL SECTIONS	F.A.P RTE.	SECTION	COUNTY	TOTAL SHEETS	SHEET NO.
		DRAWN -	REVISED -			614	144(B-1)	CASS, MASON	351	75
	PLOT SCALE = 40.0000 ′ / IN.	CHECKED -	REVISED -					CONTRACT NO. 72A76		
	PLOT DATE = Mar-31-2009 07:52:21AM	DATE -	REVISED -		SCALE: SHEET NO. 3 OF 3 SHEETS STA. TO STA.	FED. ROAD DIST. NO.	ILLINOIS	FED. AID PROJECT		

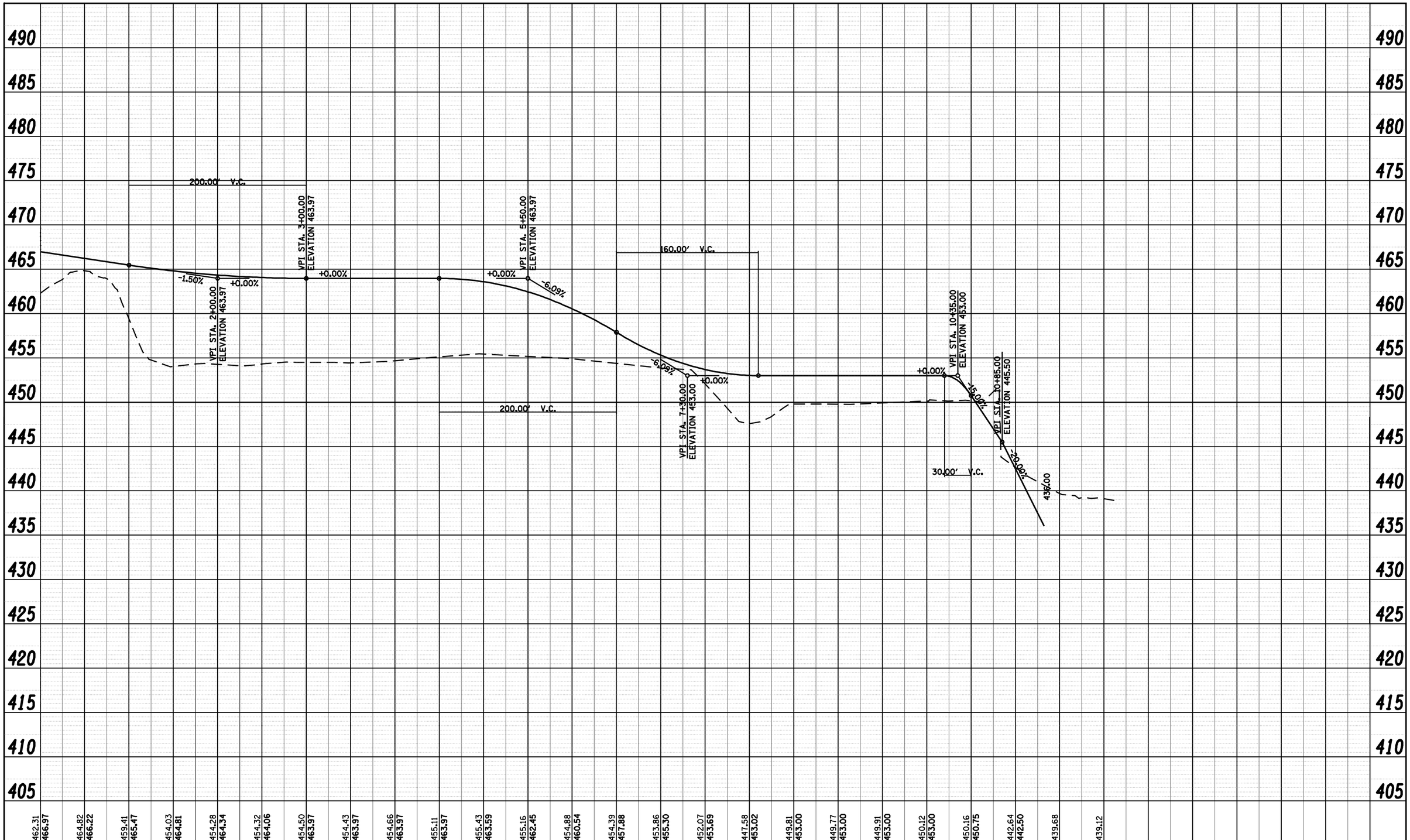

PLAN
SURVEYED
PLOTTED
ALIGNMENT CHECKED
RT. OF WAY CHECKED
CADD FILE NAME
NOTE BOOK NO.
BY
DATE

PROFILE
SURVEYED
PLOTTED
GRADES CHECKED
BAR. NOTED
STRUCTURE NOTATNS CHKD
NOTE BOOK NO.
BY
DATE

006
BR01
000.000000
350

FILE NAME = c:\pw_work\PWIDOT\LAUGHLINRL\d0134498\profileexbr01-1.dgn	USER NAME = laughlinrl	DESIGNED -	REVISED -	STATE OF ILLINOIS DEPARTMENT OF TRANSPORTATION	BOAT RAMP PROFILE – RAMP 1	F.A.P. RTE.	SECTION	COUNTY	TOTAL SHEETS / SHEET NO.
		DRAWN -	REVISED -			614	144(B-1)	CASS, MASON	351 / 76
	PLOT SCALE = 100.0000 ' / IN.	CHECKED -	REVISED -					CONTRACT NO. 72A76	
	PLOT DATE = Mar-31-2009 07:52:23AM	DATE -	REVISED -		SCALE: SHEET NO. OF SHEETS STA. 0+00.00 TO STA. 12+00.00	FED. ROAD DIST. NO.	ILLINOIS	FED. AID PROJECT	

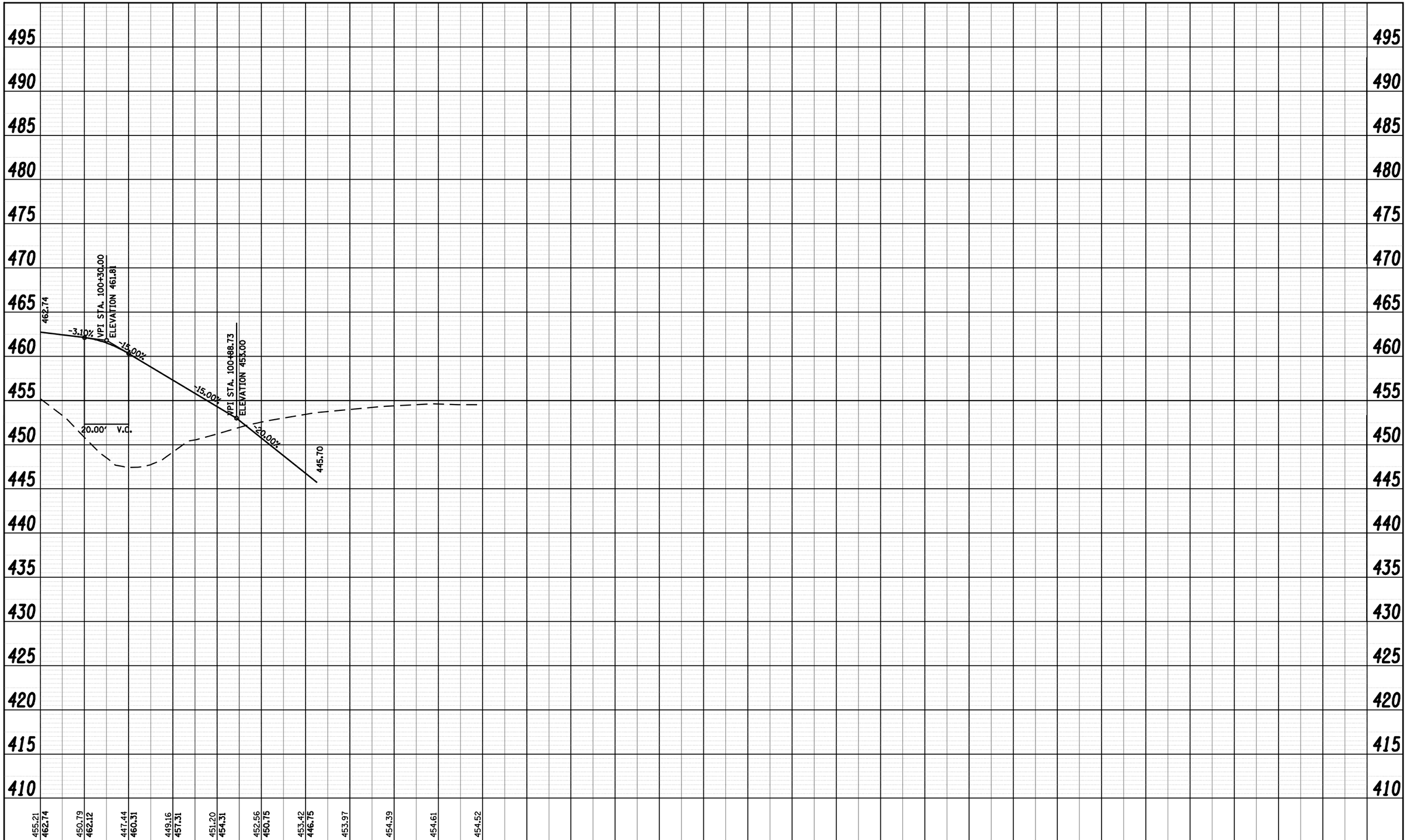

PLAN
NOTE BOOK NO.
SURVEYED
PLOTTED
ALIGNMENT CHECKED
RT. OF WAY CHECKED
CADD FILE NAME
BY
DATE

PROFILE
NOTE BOOK NO.
SURVEYED
PLOTTED
GRADES CHECKED
B.M. NOTED
STRUCTURE NOTATNS CHKD
BY
DATE

FILE NAME = c:\pw_work\PWIDOT\LAUGHLINRL\d0134498\profileexbr02-1.dgn	USER NAME = laughlinrl	DESIGNED -	REVISED -
		DRAWN -	REVISED -
	PLOT SCALE = 40.0000 ' / IN.	CHECKED -	REVISED -
	PLOT DATE = Mar-31-2009 07:52:25AM	DATE -	REVISED -

STATE OF ILLINOIS
DEPARTMENT OF TRANSPORTATION

BOAT RAMP PROFILE – BOAT RAMP 2

SCALE: | SHEET NO. 2 OF 2 SHEETS | STA. | TO STA.

F.A.P. RTE.	SECTION	COUNTY	TOTAL SHEETS	SHEET NO.
614	144(B-1)	CASS, MASON	351	77
		CONTRACT NO. 72A76		

FED. ROAD DIST. NO. | ILLINOIS | FED. AID PROJECT

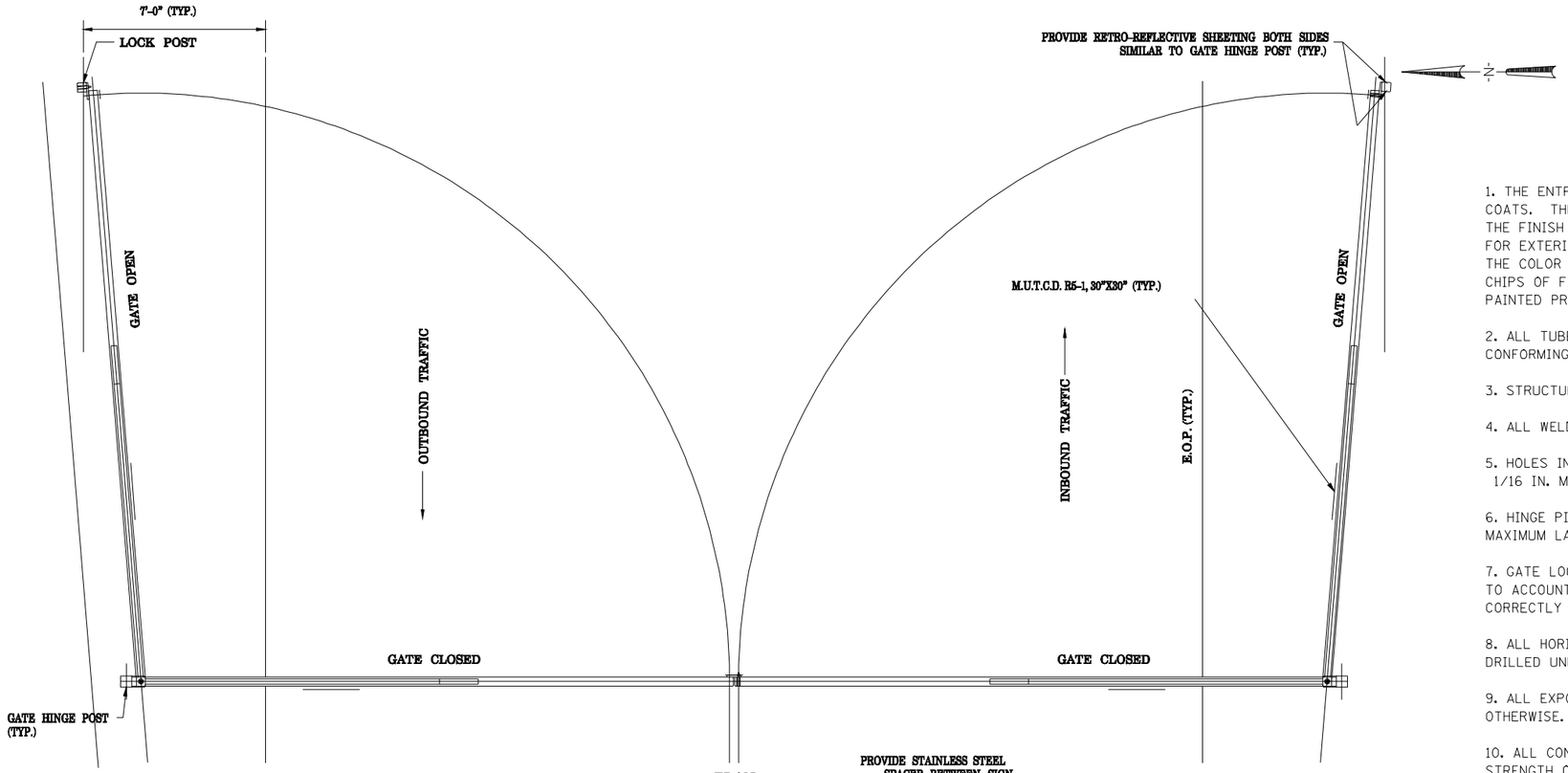

PLAN

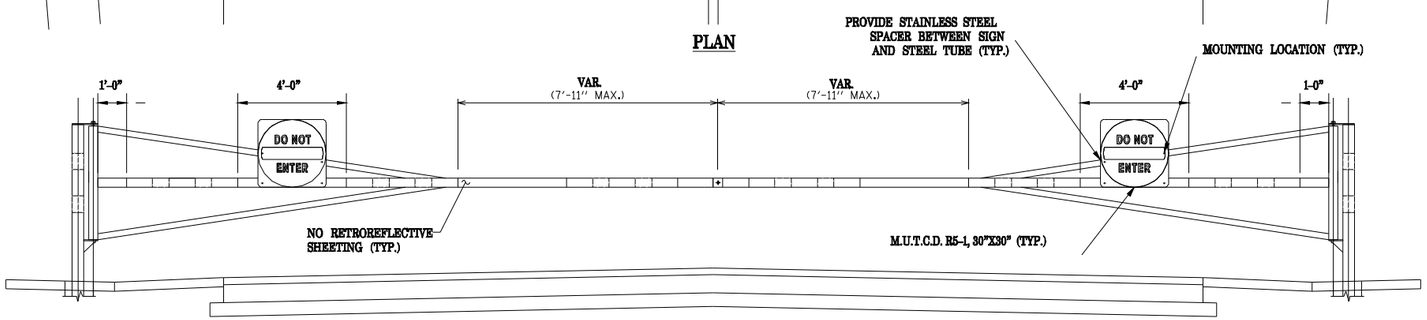

RETROREFLECTIVE SHEETING ELEVATION
(FRONT & REAR VIEW)

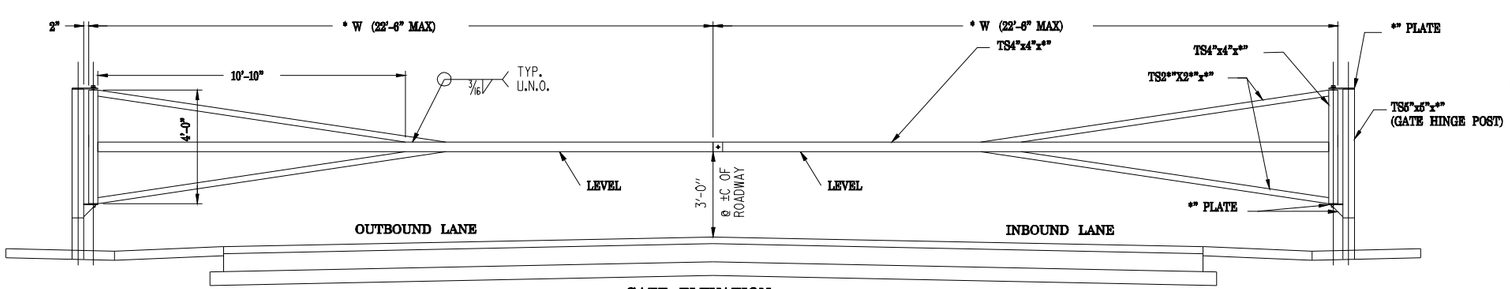

GATE ELEVATION
(RETROFLECTIVE SHEETING NOT SHOWN FOR CLARITY)

GENERAL NOTES

1. THE ENTRANCE GATE SHALL BE PAINTED WITH ONE PRIMER COAT AND TWO FINISH COATS. THE PRIMER SHALL BE AN ORGANIC, ZINC RICH, RUST INHIBITING PRIMER. THE FINISH COATS SHALL BE A MINERAL SPIRIT REDUCED FINISHED COAT INTENDED FOR EXTERIOR APPLICATIONS.
THE COLOR SHALL MATCH EXISTING FACILITIES. CONTRACTOR SHALL SUBMIT PAINT CHIPS OF FINAL COLOR FOR APPROVAL. ALL EDGES OF HOLES SHALL BE PRIMED AND PAINTED PRIOR TO INSTALLING THE BOLTS.

2. ALL TUBE MEMBERS (TS) SHALL BE COLD FORMED WELDED STRUCTURAL STEEL CONFORMING TO THE LATEST ASTM A500 GRADE B (46 KSI).

3. STRUCTURAL STEEL SHALL CONFORM TO THE LATEST ASTM A36.

4. ALL WELDS SHALL BE IN ACCORDANCE WITH AWS D1.1 USING E70 ELECTRODES.

5. HOLES IN THE STRUCTURAL STEEL AND TUBE MEMBERS SHALL BE 1/16 IN. MAXIMUM LARGER THAN THE BOLT, UNLESS NOTED OTHERWISE.

6. HINGE PIN HOLES IN THE STRUCTURAL STEEL AND TUBE MEMBERS SHALL BE 1/32 IN. MAXIMUM LARGER THAN THE PIN, UNLESS NOTED OTHERWISE.

7. GATE LOCK POST SHALL BE ERECTED AFTER THE GATE IN ORDER TO ACCOUNT FOR THE DEAD LOAD DEFLECTION OF THE GATE AND TO CORRECTLY LOCATE THE HOLE AND PIN ALIGNMENT.

8. ALL HORIZONTAL AND DIAGONAL MEMBERS SHALL HAVE A 1/2 " DIAMETER VENT HOLE DRILLED UNDERNEATH THE MEMBERS AT EACH END.

9. ALL EXPOSED CORNERS OF PLATES SHALL HAVE A 1/4 " RADIUS UNLESS NOTED OTHERWISE.

10. ALL CONCRETE SHALL BE CLASS SI AND SHALL HAVE A MINIMUM 14-DAY COMPRESSIVE STRENGTH OF 3500 PSI. ALL FOUNDATIONS SHALL BE DRILLED, INSPECTED, AND APPROVED BY THE OWNER'S REPRESENTATIVE PRIOR TO PLACEMENT OF CONCRETE. THE SOIL WAS ASSUMED TO BE A BLACK SLAG OR A LOOSE SAND AND GRAVEL.

11. CONTRACTOR SHALL PROVIDE A 7-YEAR WARRANTY ON THE RETROREFLECTIVE SHEETING.

12. CONTRACTOR SHALL LAYOUT LOCK POSTS AND HINGE POSTS FOR LOCATION APPROVAL BY ENGINEER PRIOR TO FABRICATION.

13. ALL EXPOSED EDGES SHALL BE GROUND SMOOTH.

14. ALL STEEL SHALL BE BLAST CLEANED PER SSPC-SP6 COMMERCIAL BLAST CLEANING PRIOR TO APPLICATION OF PRIMER COAT.

15. SIGNS SHALL BE THRU-BOLTED TO THE GATE AT THE LOCATIONS INDICATED ON THE PLAN WITH STAINLESS STEEL BOLTS. THE HOLES FOR THE BOLTS SHALL BE DRILLED.

W=WIDTH OF DOUBLE GATE
1/2W = WIDTH OF SINGLE GATE
(NOTE: WITH SINGLE GATE AN ADDITIONAL LOCK POST WILL BE REQUIRED TO KEEP GATE CLOSED)

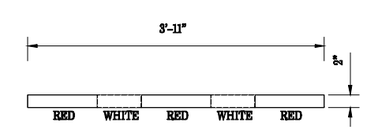

TYPICAL RETROREFLECTIVE SHEETING DETAIL

D-96-506-07

FILE NAME = c:\pw_work\PWIDOT\LAUGHLINRL\d0134498\a1gatedetails.dgn	USER NAME = laughlinrl	DESIGNED -	REVISED -	STATE OF ILLINOIS DEPARTMENT OF TRANSPORTATION	ACCESS GATE DETAILS	F.A.P RTE.	SECTION	COUNTY	TOTAL SHEETS / SHEET NO.
	PLOT SCALE = 40.0000 ' / IN.	DRAWN -	REVISED -			614	144(B-1, B-2)	CASS, MASON	351 / 78
	PLOT DATE = Mar-31-2009 07:52:27AM	CHECKED -	REVISED -					CONTRACT NO. 72A76	
		DATE -	REVISED -		SCALE: SHEET NO. 1 OF 2 SHEETS STA. TO STA.	FED. ROAD DIST. NO.	ILLINOIS	FED. AID PROJECT	

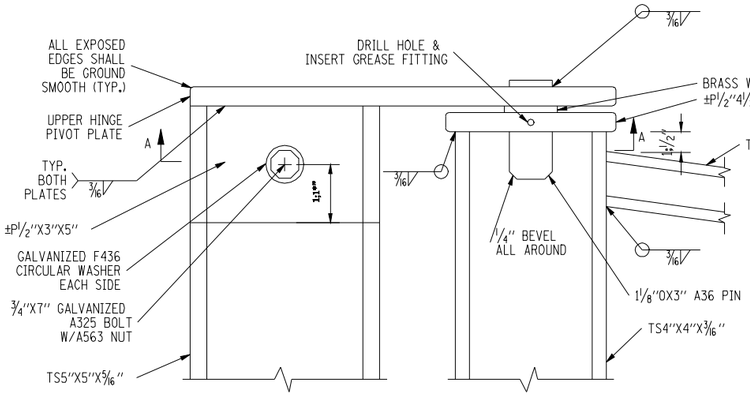

UPPER HINGE DETAIL
NTS

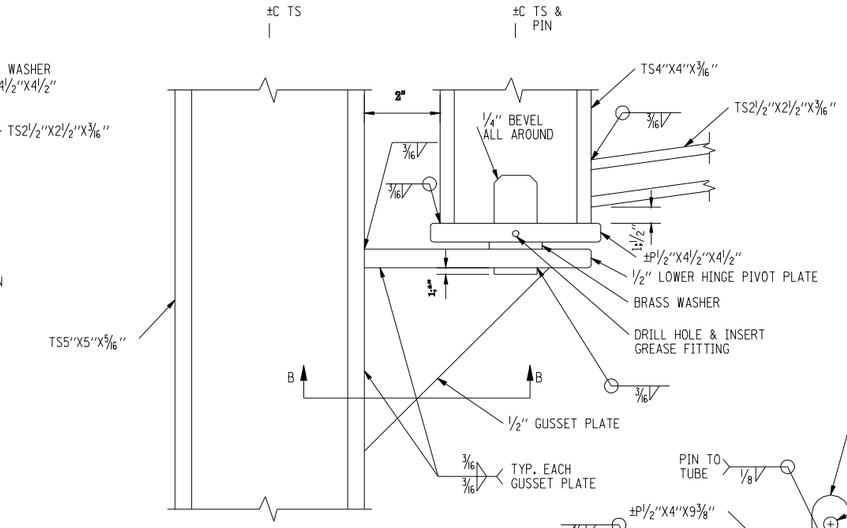

LOWER HINGE DETAIL
NTS

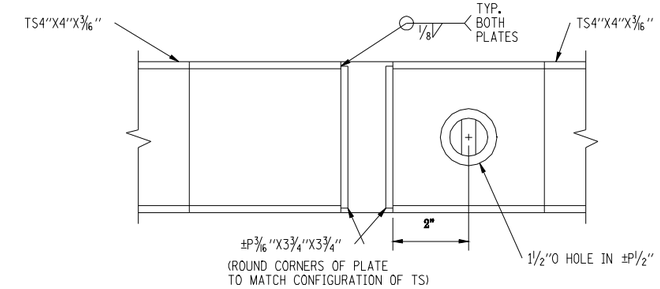

SECTION C
NTS

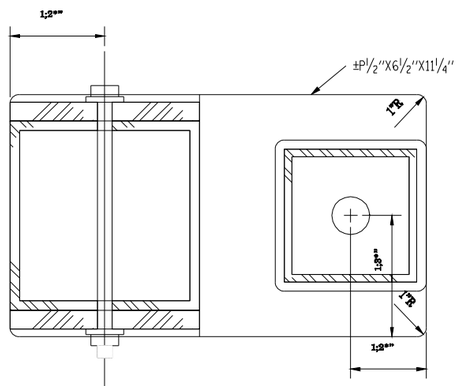

SECTION A-A
NTS

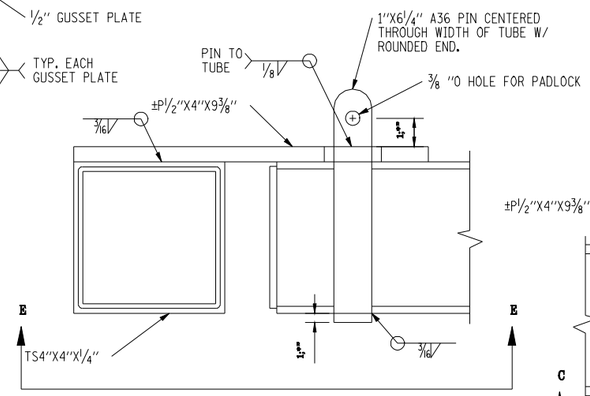

SOUTH LOCK POST DETAIL
NTS

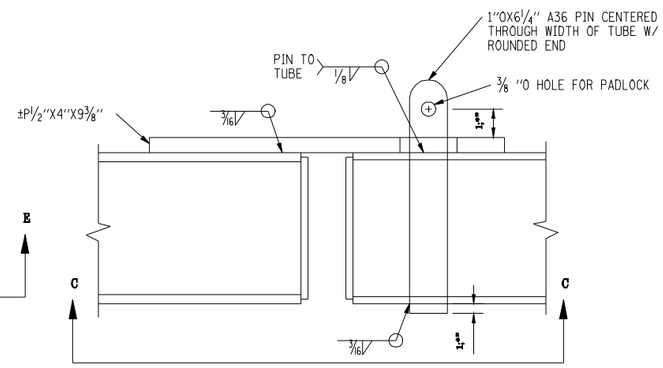

GATE-TO-GATE CONNECTION
NTS

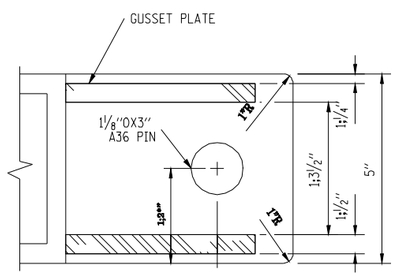

SECTION B-B
NTS

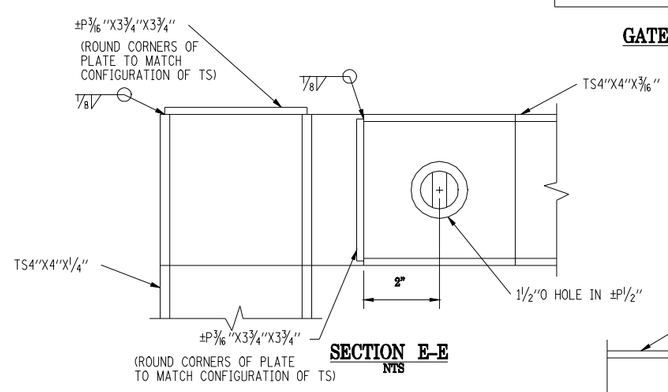

SECTION E-E
NTS

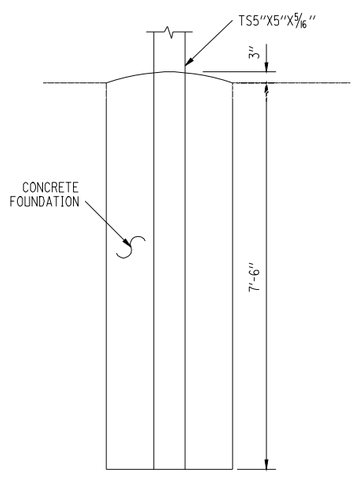

GATE POST FOUNDATION DETAIL
NTS

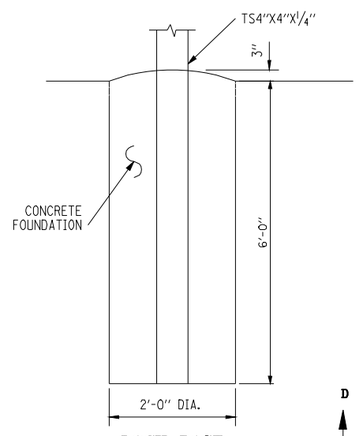

LOCK POST FOUNDATION DETAIL
NTS

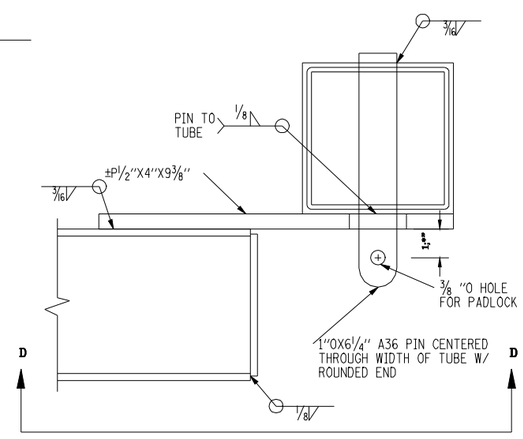

NORTH LOCK POST DETAIL
NTS

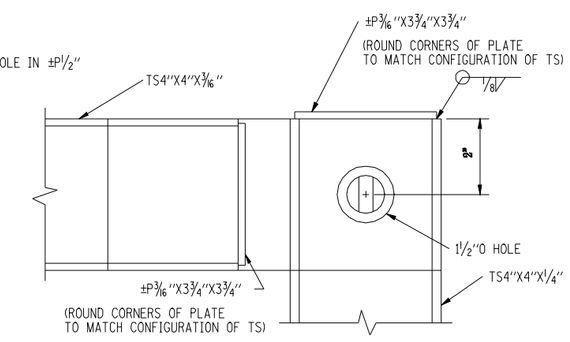

SECTION D-D
NTS

D-96-506-07

FILE NAME = c:\pw_work\PWIDOT\LAUGHLINRL\d0134498\sntgatedetails.dgn	USER NAME = laughlinrl	DESIGNED -	REVISED -	STATE OF ILLINOIS DEPARTMENT OF TRANSPORTATION	ACCESS GATE DETAILS	F.A.P RTE.	SECTION	COUNTY	TOTAL SHEETS / SHEET NO.
	PLOT SCALE = 40.0000 ' / IN.	DRAWN -	REVISED -			614	144(B-1, B-2)	CASS, MASON	351 / 79
	PLOT DATE = Mar-31-2009 07:52:30AM	CHECKED -	REVISED -					CONTRACT NO. 72A76	
		DATE -	REVISED -		SCALE: / SHEET NO. 2 OF 2 SHEETS / STA. / TO STA.	FED. ROAD DIST. NO.	ILLINOIS	FED. AID PROJECT	

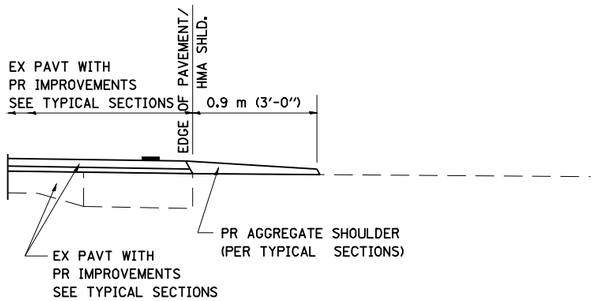

SECTION A-A FOR EX EARTH/ AGGREGATE FE

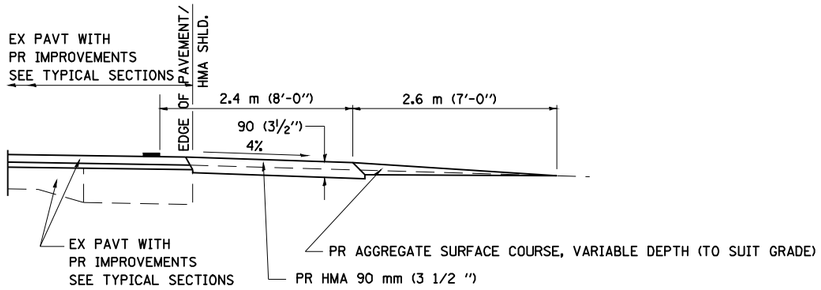

SECTION A-A FOR EX EARTH/AGGREGATE PE

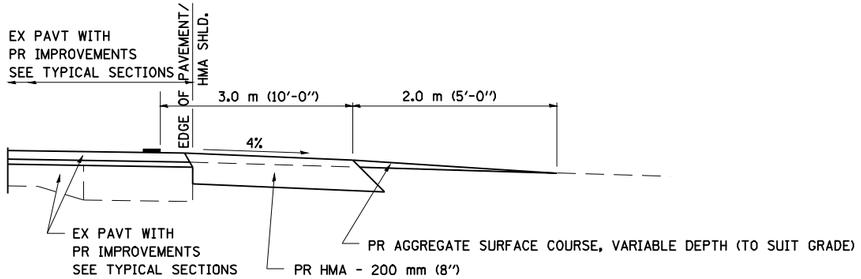

SECTION A-A FOR EX EARTH/AGGREGATE CE & SIDE ROAD

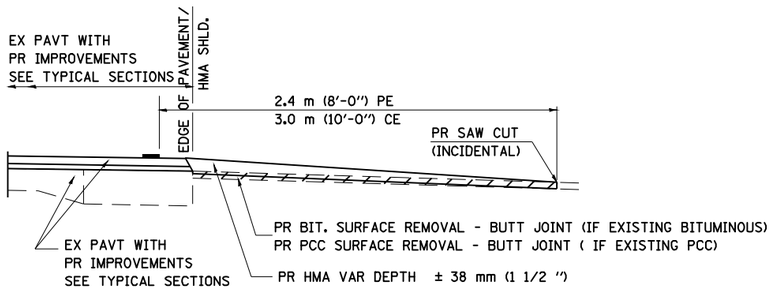

SECTION A-A FOR EX BITUMINOUS/ PC CONCRETE PE, CE & SIDE ROAD

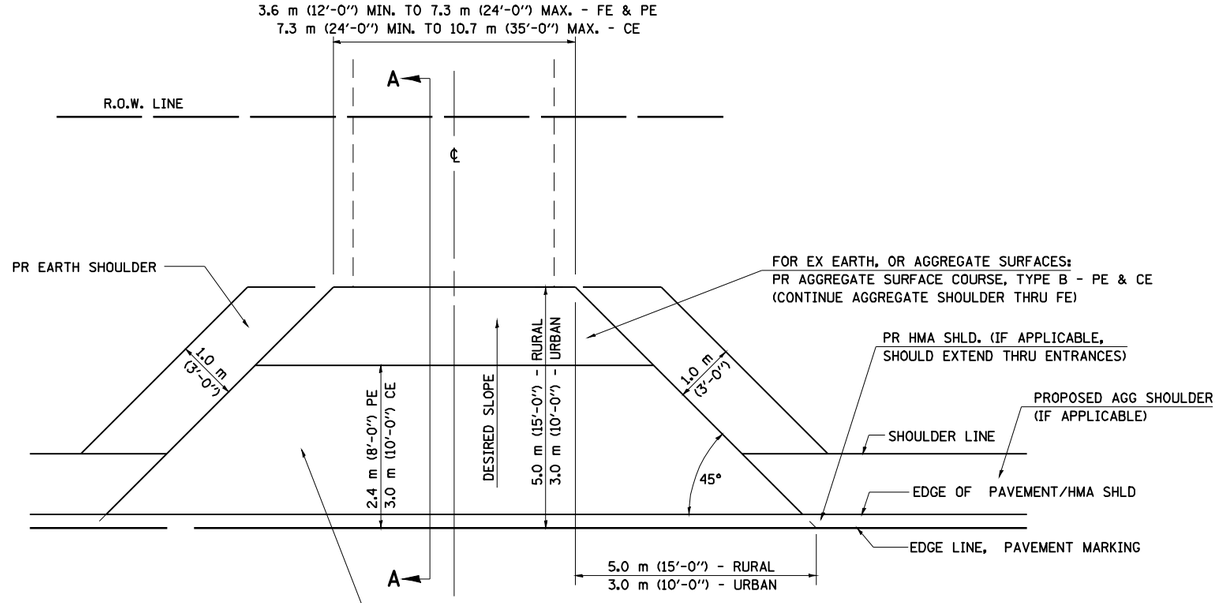

FOR EX EARTH OR AGGREGATE SURFACES:
PR BIT SURFACE REMOVAL (IF APPLICABLE)
PR AGGREGATE SHOULDER THRU - FE
PR BITUMINOUS CONCRETE 90 mm (3½") - PE
PR BITUMINOUS CONCRETE 200mm (8") - CE

FOR EX BITUMINOUS CONCRETE SURFACES:
PR BITUMINOUS SURFACE REMOVAL-BUTT JOINT

FOR EX PCC SURFACES:
PR PCC SURFACE REMOVAL-BUTT JOINT

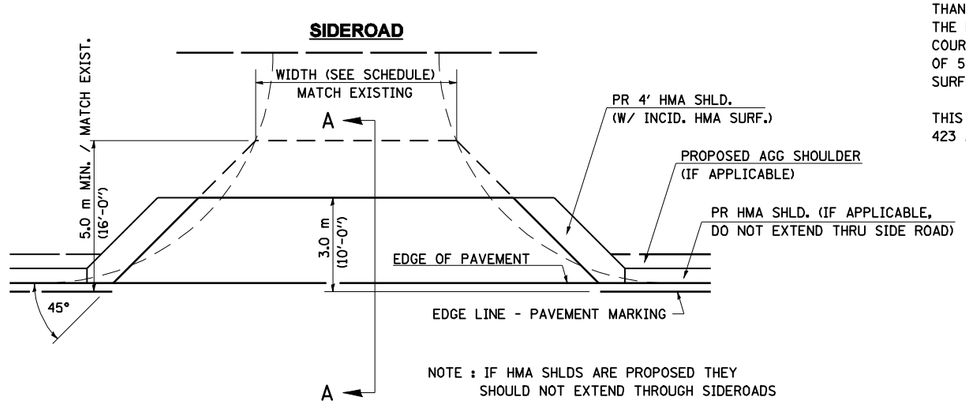

NOTE : IF HMA SHLDS ARE PROPOSED THEY
SHOULD NOT EXTEND THROUGH SIDEROADS

GENERAL NOTES:

THE RESIDENT ENGINEER WILL DETERMINE THE EXACT TYPE OF IMPROVEMENT TO BE COMPLETED FOR ALL ENTRANCES, SIDEROADS AND MAILBOX TURNOUTS ON THIS PROJECT.

THE PLAN DETAILS AND SCHEDULES SHOULD BE USED AS A GUIDE FOR THE ENGINEER TO IMPLEMENT THE FINAL DESIGN. THE ENGINEER MAY DECIDE TO SALVAGE PORTIONS OF THE EXISTING ENTRANCE PAVEMENT STRUCTURE; THEREFORE, REDUCING PAY ITEM QUANTITIES. NO ADDITIONAL PAYMENT WILL BE ALLOWED FOR THIS REDUCTION IN QUANTITIES.

ANY WORK THE ENGINEER REQUIRES WHICH IS NOT COVERED BY A PAY ITEM CONTAINED IN THE PLANS WILL BE PAID FOR IN ACCORDANCE WITH ARTICLE 109.04 OF THE STANDARD SPECIFICATIONS.

BITUMINOUS CONCRETE REQUIRED TO CONSTRUCT THE ENTRANCES SHALL BE IN ACCORDANCE WITH THE APPLICABLE PORTIONS OF SECTION 406 AND 408 OF THE STANDARD SPECIFICATIONS AND AS DIRECTED BY THE ENGINEER.

WHEN THE BITUMINOUS CONCRETE PROPOSED FOR THE IMPROVEMENT IS THICKER THAN 75 mm (3 INCHES) AND REQUIRE PLACEMENT IN MORE THAN ONE LIFT. THE BOTTOM LIFT(S) SHALL MEET THE REQUIREMENTS OF BITUMINOUS BASE COURSE IN SECTION 406 OF THE STANDARD SPECIFICATIONS AND THE TOP LIFT OF 50 mm (2 INCHES) SHALL MEET THE REQUIREMENTS OF BITUMINOUS CONCRETE SURFACE COURSE, SUPERPAVE.

THIS WORK WILL BE PAID FOR IN ACCORDANCE WITH SECTIONS 351, 358, 408, 423 AND 440 OF THE STANDARD SPECIFICATIONS.

ALL DIMENSIONS ARE IN MILLIMETERS (INCHES)
UNLESS OTHERWISE SHOWN.

FILE NAME = c:\pw_work\PWIDOT\LAUGHLINRL\d0134498\ent_ppp.dgn	USER NAME = laughlinrl	DESIGNED -	REVISED - 2/19/03 JCN	STATE OF ILLINOIS DEPARTMENT OF TRANSPORTATION	DIST. 6 DETAILS FOR RURAL/URBAN ENT., MAILBOX TURNOUT & SIDEROADS W/O CONC. GUTTER (3P-PROJ.)	F.A.P. RTE.	SECTION	COUNTY	TOTAL SHEETS	SHEET NO.
		DRAWN - CADD	REVISED - 4/01/04 JCN			614	144(B-1, B-2)	CASS, MASON	351	80
ENT PPP.DGN	PLOT SCALE = 40.000 ' / IN.	CHECKED - JCN	REVISED -					CONTRACT NO. 72A76		
	PLOT DATE = Mar-31-2009 07:52:33AM	DATE - FEBRUARY 23, 1999	REVISED -		SCALE: SHEET NO. 1 OF 2 SHEETS STA. TO STA.	FED. ROAD DIST. NO.	ILLINOIS	FED. AID PROJECT		

DETAILS OF MAILBOX TURNOUTS

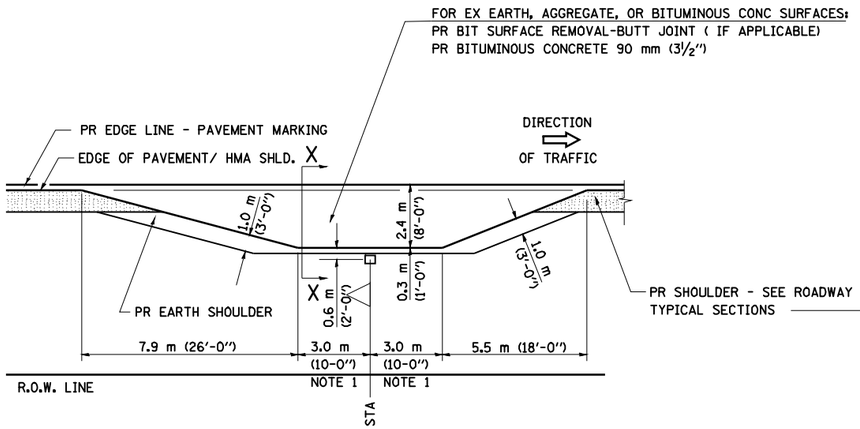

PLAN - MAILBOX TURNOUTS

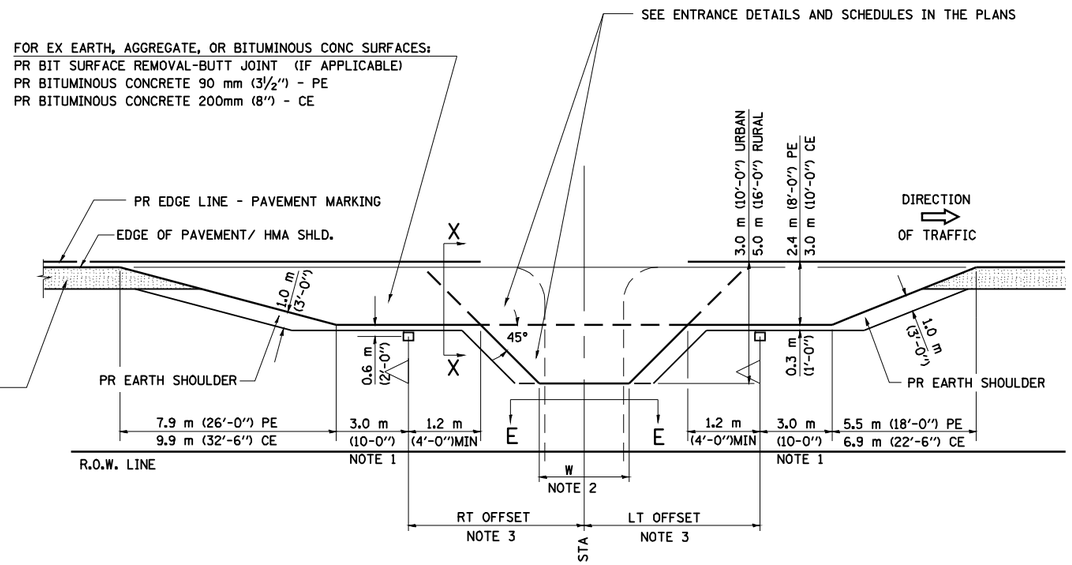

PLAN - COMBINED MAILBOX TURNOUT WITH TRAILING OR LEADING ENTRANCE

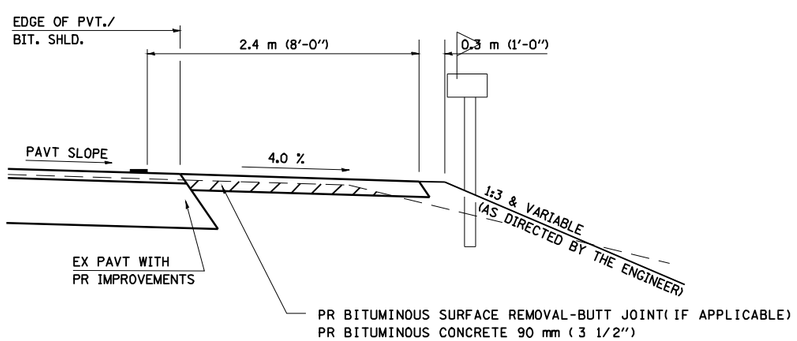

SECTION X-X THRU MAILBOX TURNOUT
ALSO APPLIES TO MAILBOX TURNOUTS COMBINED WITH EX EARTH, AGGREGATE, OR BITUMINOUS PE & FE

(DETAIL APPLIES WHEN M.B. TURNOUT DOES NOT EXIST. IF EXISTING, TREAT SAME AS ENTRANCE.)

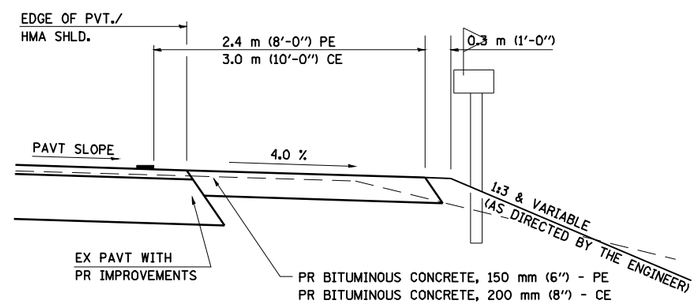

SECTION X-X THRU MAILBOX TURNOUT
COMBINED WITH EX BITUMINOUS CONC & PC CONC PE & CE

(DETAIL APPLIES WHEN M.B. TURNOUT DOES NOT EXIST. IF EXISTING, TREAT SAME AS ENTRANCE.)

NOTE 1 IF MORE THAN ONE MAILBOX IS PRESENT, DIMENSION FROM CENTER OF END MAILBOX.

NOTE 2 FOR ENTRANCE LAYOUT DIMENSIONS AND SECTIONS A-A & E-E REFER TO THE SCHEDULES IN THE PLANS.

NOTE 3 BOTH LT OR RT OFFSETS FOR MAILBOX SHOWN USE OFFSET DIMENSION PER SCHEDULE AND REFER TO LAYOUT SHOWN ON THE PLAN.

ALL DIMENSIONS ARE IN MILLIMETERS (INCHES) UNLESS OTHERWISE SHOWN.

FILE NAME = c:\pw_work\PWIDOT\LAUGHLINRL\d0134498\ent_ppp.dgn	USER NAME = laughlinrl	DESIGNED -	REVISED - 2/19/03 JCN	STATE OF ILLINOIS DEPARTMENT OF TRANSPORTATION	DIST. 6 DETAILS FOR RURAL/URBAN ENT., MAILBOX TURNOUT & SIDEROADS W/O CONC. GUTTER (3P-PROJ.)	F.A.P. RTE.	SECTION	COUNTY	TOTAL SHEETS	SHEET NO.
ENT PPP.DGN		DRAWN - CADD	REVISED - 4/01/04 JCN			614	144(B-1, B-2)	CASS, MASON	351	81
	PLOT SCALE = 40.000 ' / IN.	CHECKED - JCN	REVISED -					CONTRACT NO. 72A76		
	PLOT DATE = Mar-31-2009 07:52:35AM	DATE - FEBRUARY 23, 1999	REVISED -		SCALE: SHEET NO. 2 OF 2 SHEETS STA. TO STA.	FED. ROAD DIST. NO.	ILLINOIS	FED. AID PROJECT		

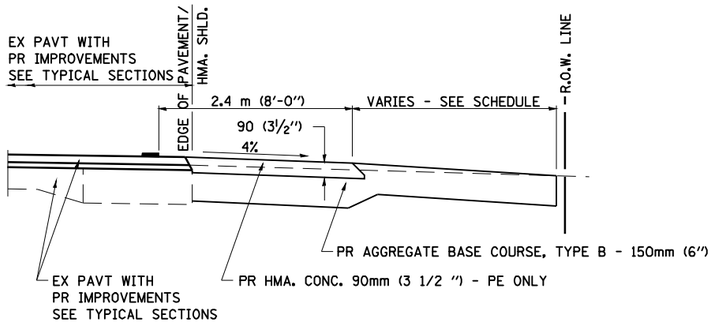

SECTION A-A FOR EX EARTH/AGGREGATE FE & PE

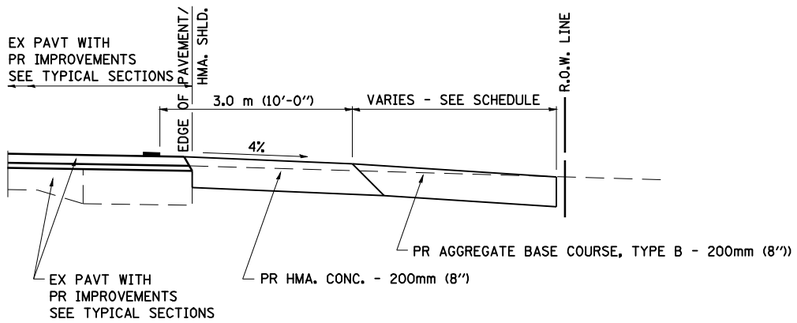

SECTION A-A FOR EX EARTH/AGGREGATE CE

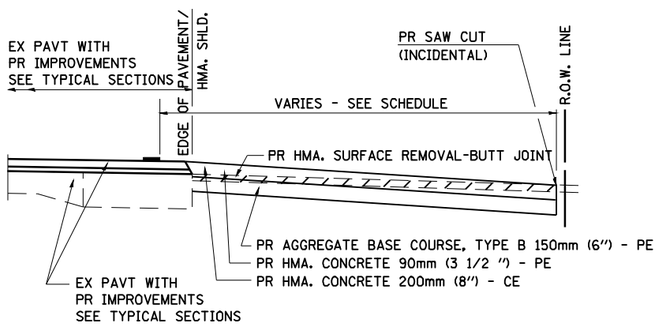

SECTION A-A FOR EX HMA PE & CE

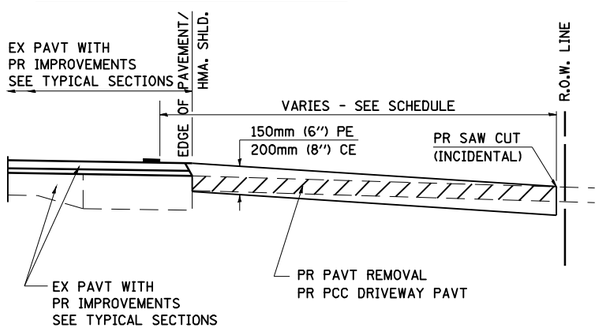

SECTION A-A FOR EX P.C. CONC. PE & CE

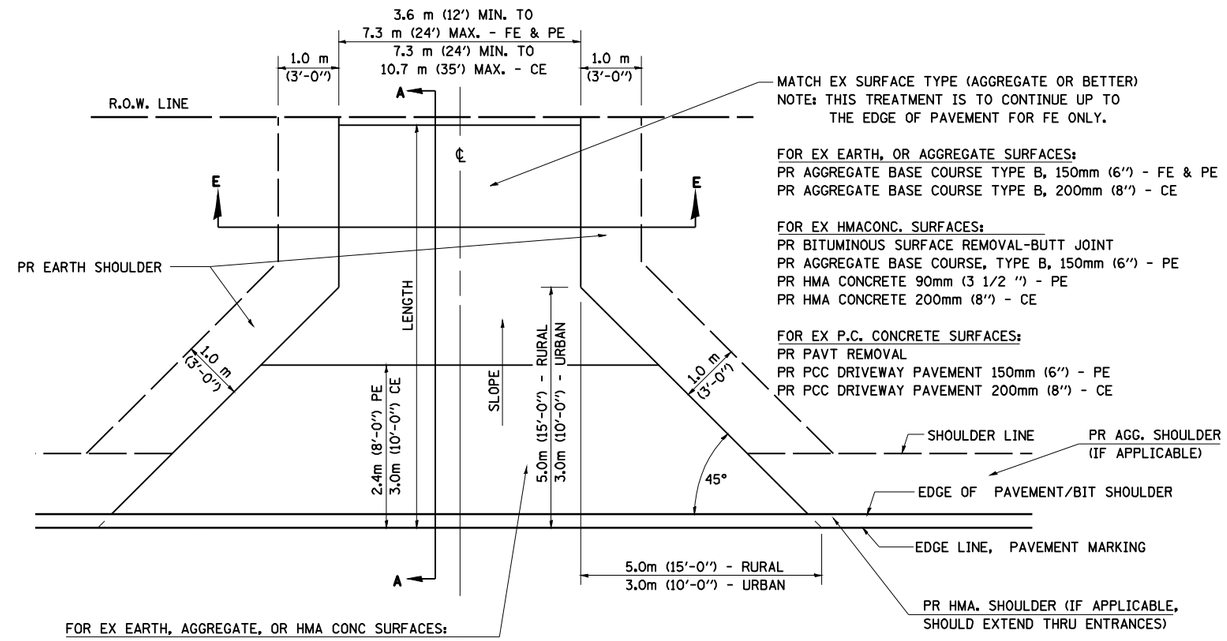

MATCH EX SURFACE TYPE (AGGREGATE OR BETTER)
NOTE: THIS TREATMENT IS TO CONTINUE UP TO THE EDGE OF PAVEMENT FOR FE ONLY.

FOR EX EARTH, OR AGGREGATE SURFACES:
PR AGGREGATE BASE COURSE TYPE B, 150mm (6") - FE & PE
PR AGGREGATE BASE COURSE TYPE B, 200mm (8") - CE

FOR EX HMACONC. SURFACES:
PR BITUMINOUS SURFACE REMOVAL-BUTT JOINT
PR AGGREGATE BASE COURSE, TYPE B, 150mm (6") - PE
PR HMA CONCRETE 90mm (3 1/2 ") - PE
PR HMA CONCRETE 200mm (8") - CE

FOR EX P.C. CONCRETE SURFACES:
PR PAVT REMOVAL
PR PCC DRIVEWAY PAVEMENT 150mm (6") - PE
PR PCC DRIVEWAY PAVEMENT 200mm (8") - CE

FOR EX EARTH, AGGREGATE, OR HMA CONC SURFACES:
PR HMA SURFACE REMOVAL-BUTT JOINT (IF APPLICABLE)
PR AGGREGATE BASE COURSE TYPE B 150mm (6") - FE
PR AGGREGATE BASE COURSE TYPE B, 150mm (6") &
PR HMA CONCRETE 90mm (3 1/2 ") - PE
PR HMA CONCRETE 200mm (8") - CE

FOR P.C. CONCRETE SURFACES:
PR PAVT REMOVAL
PR PCC DRIVEWAY PAVT 150mm (6") - PE
PR PCC DRIVEWAY PAVT 200mm (8") - CE

GENERAL NOTES:

THE RESIDENT ENGINEER WILL DETERMINE THE EXACT TYPE OF IMPROVEMENT TO BE COMPLETED FOR ALL ENTRANCES, SIDEROADS AND MAILBOX TURNOUTS ON THIS PROJECT.

THE PLAN DETAILS AND SCHEDULES SHOULD BE USED AS A GUIDE FOR THE ENGINEER TO IMPLEMENT THE FINAL DESIGN. THE ENGINEER MAY DECIDE TO SALVAGE PORTIONS OF THE EXISTING ENTRANCE PAVEMENT STRUCTURE; THEREFORE, REDUCING PAY ITEM QUANTITIES. NO ADDITIONAL PAYMENT WILL BE ALLOWED FOR THIS REDUCTION IN QUANTITIES.

ANY WORK THE ENGINEER REQUIRES WHICH IS NOT COVERED BY A PAY ITEM CONTAINED IN THE PLANS WILL BE PAID FOR IN ACCORDANCE WITH ARTICLE 109.04 OF THE STANDARD SPECIFICATIONS.

BITUMINOUS CONCRETE REQUIRED TO CONSTRUCT THE ENTRANCES SHALL BE IN ACCORDANCE WITH THE APPLICABLE PORTIONS OF SECTION 406 AND 408 OF THE STANDARD SPECIFICATIONS AND AS DIRECTED BY THE ENGINEER.

WHEN THE BITUMINOUS CONCRETE PROPOSED FOR THE IMPROVEMENT IS THICKER THAN 75 mm (3 INCHES) AND REQUIRE PLACEMENT IN MORE THAN ONE LIFT. THE BOTTOM LIFT(S) SHALL MEET THE REQUIREMENTS OF BITUMINOUS BASE COURSE IN SECTION 406 OF THE STANDARD SPECIFICATIONS AND THE TOP LIFT OF 50 mm (2 INCHES) SHALL MEET THE REQUIREMENTS OF BITUMINOUS CONCRETE SURFACE COURSE, SUPERPAVE.

THIS WORK WILL BE PAID FOR IN ACCORDANCE WITH SECTIONS 351, 358, 408, 423 AND 440 OF THE STANDARD SPECIFICATIONS.

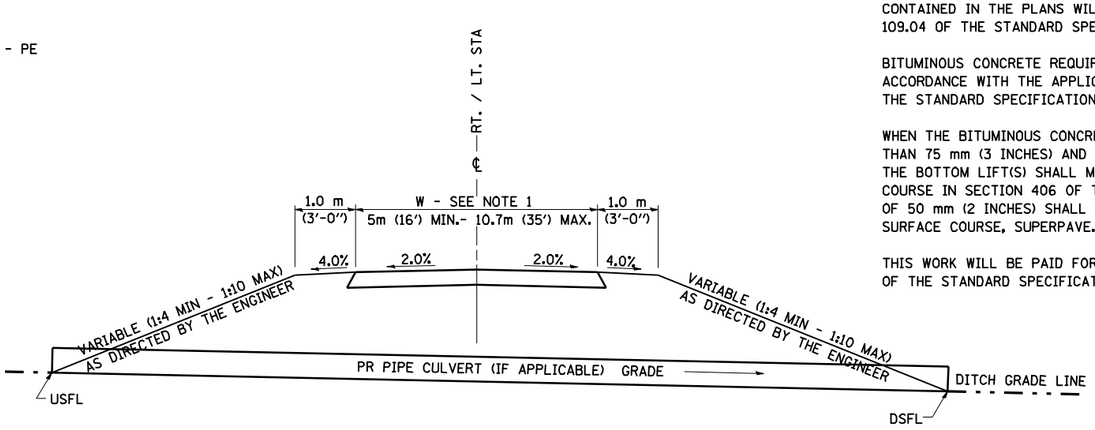

SECTION E - E ENTRANCE TYPICAL SECTION

NOTE 1: WIDTH OF ENTRANCE MAY BE INCREASED AT THE PIPE CULVERT DUE TO THE DITCHLINE BEING LOCATED IN THE ENTRANCE FLARE AREA.

ALL DIMENSIONS ARE IN MILLIMETERS (INCHES) UNLESS OTHERWISE SHOWN.

2/19/03

D-96-506-07

FILE NAME = c:\pw_work\PWIDOT\LAUGHLINRL\d0134498\sht3Rentdetails.dgn	USER NAME = laughlinrl	DESIGNED -	REVISED - JCN 2/19/03	STATE OF ILLINOIS DEPARTMENT OF TRANSPORTATION	DISTRICT SIX DETAILS FOR RURAL / URBAN ENTRANCE & MAILBOX TURNOUT W / O CONCRETE GUTTER (3R - PROJECTS)
	PLOT SCALE = 40.0000 ' / IN.	DRAWN -	REVISED - JCN 4/01/04		
	PLOT DATE = Mar-31-2009 07:52:37AM	CHECKED -	REVISED - JCN 8/01/07		SCALE: SHEET NO. 1 OF 2 SHEETS STA. TO STA.
		DATE -	REVISED -		

F.A.P RTE.	SECTION	COUNTY	TOTAL SHEETS	SHEET NO.
614	144(B-1, B-2)	CASS, MASON	351	82
		CONTRACT NO. 72A76		
FED. ROAD DIST. NO.	ILLINOIS	FED. AID PROJECT		

DETAILS OF MAILBOX TURNOUTS

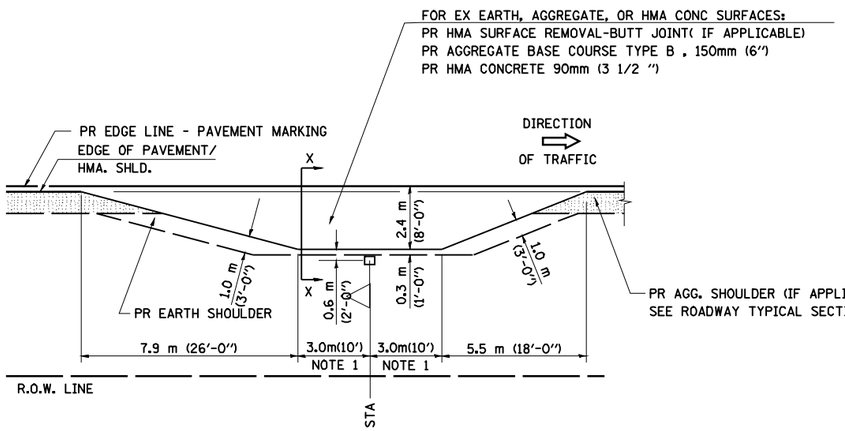

PLAN - MAILBOX TURNOUTS

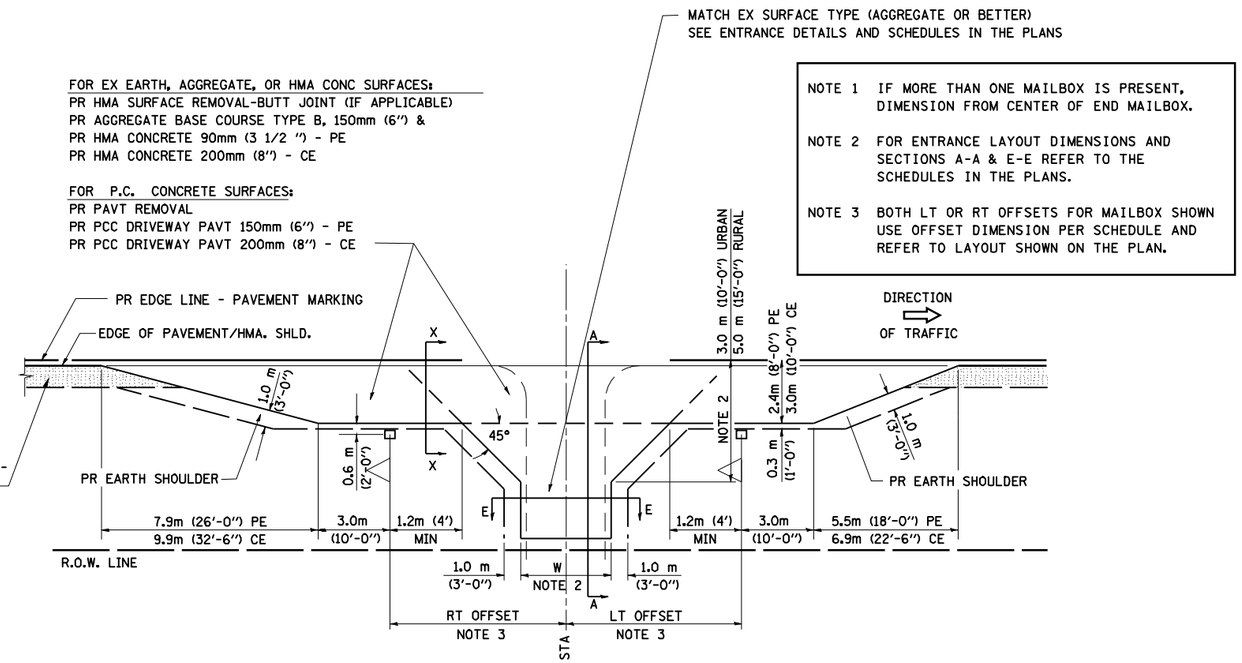

PLAN - COMBINED MAILBOX TURNOUT WITH TRAILING OR LEADING ENTRANCE

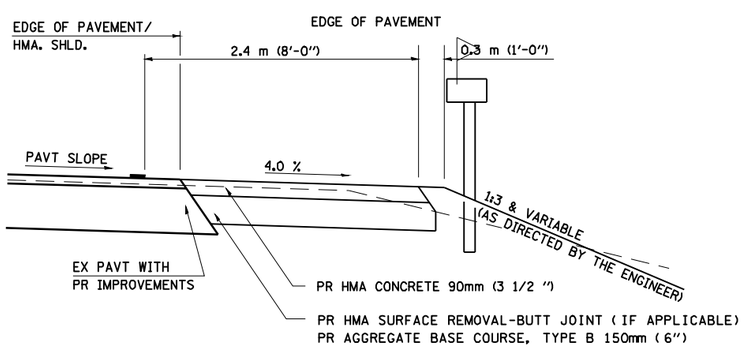

SECTION X-X THRU MAILBOX TURNOUT ALSO APPLIES TO MAILBOX TURNOUTS COMBINED WITH EX EARTH, AGGREGATE, OR HMA PE & FE

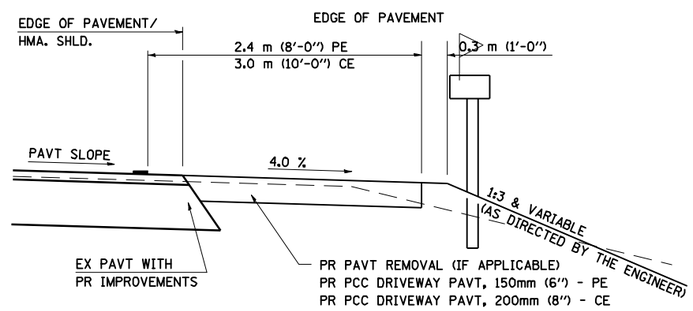

SECTION X-X THRU MAILBOX TURNOUT COMBINED WITH EX CONC PE OR CE

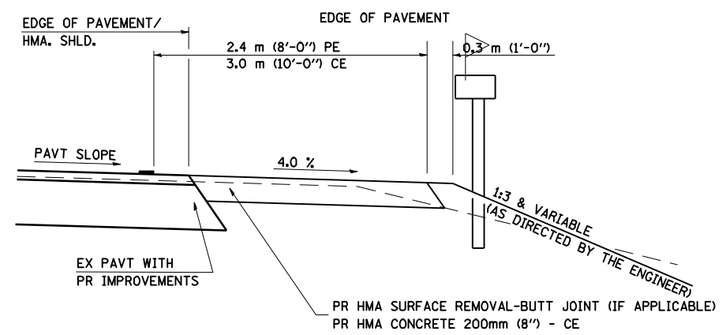

SECTION X-X THRU MAILBOX TURNOUT COMBINED WITH EX EARTH, AGGREGATE, OR HMA CE

D-96-506-07

FILE NAME = c:\pw_work\PWIDOT\LAUGHLINRL\d0134498\sht3Rentdetails.dgn	USER NAME = laughlinrl	DESIGNED -	REVISED - JCN 2/19/03	STATE OF ILLINOIS DEPARTMENT OF TRANSPORTATION	DISTRICT SIX DETAILS FOR RURAL / URBAN ENTRANCE & MAILBOX TURNOUT W / O CONCRETE GUTTER (3R - PROJECTS)	F.A.P RTE.	SECTION	COUNTY	TOTAL SHEETS	SHEET NO.
		DRAWN -	REVISED - JCN 4/01/04			614	144(B-1, B-2)	CASS, MASON	351	83
	PLOT SCALE = 40.0000 ' / IN.	CHECKED -	REVISED - JCN 8/01/07					CONTRACT NO. 72A76		
	PLOT DATE = Mar-31-2009 07:52:39AM	DATE -	REVISED -		SCALE: SHEET NO. 2 OF 2 SHEETS STA. TO STA.	FED. ROAD DIST. NO.	ILLINOIS	FED. AID PROJECT		

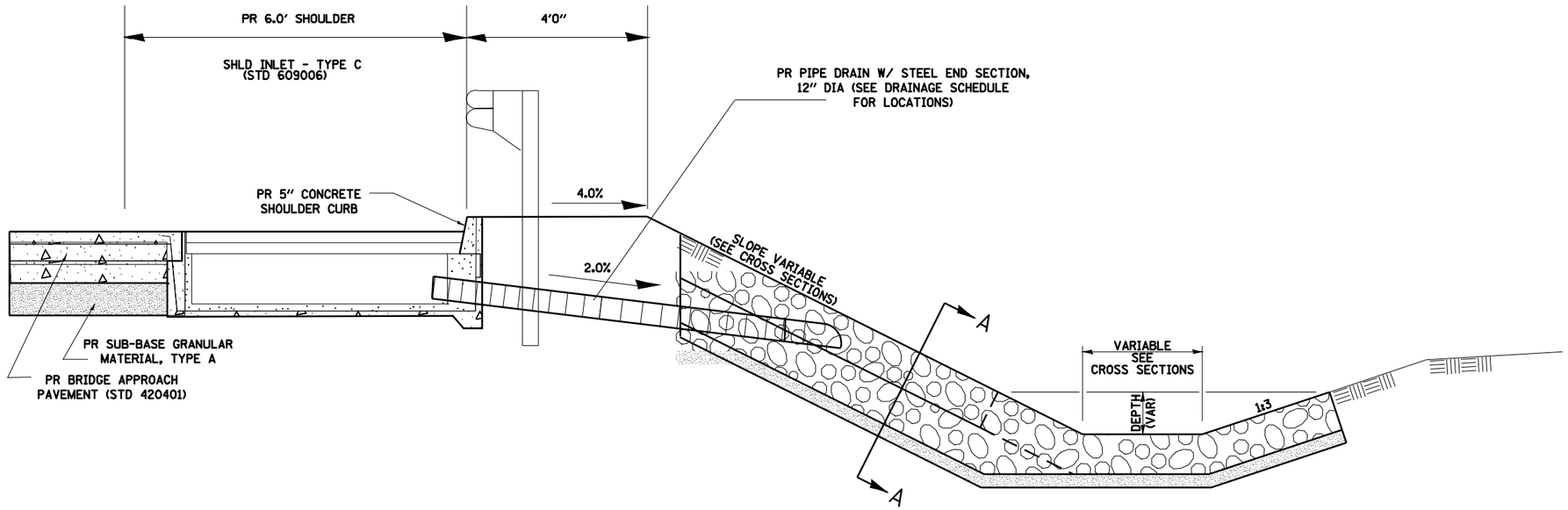

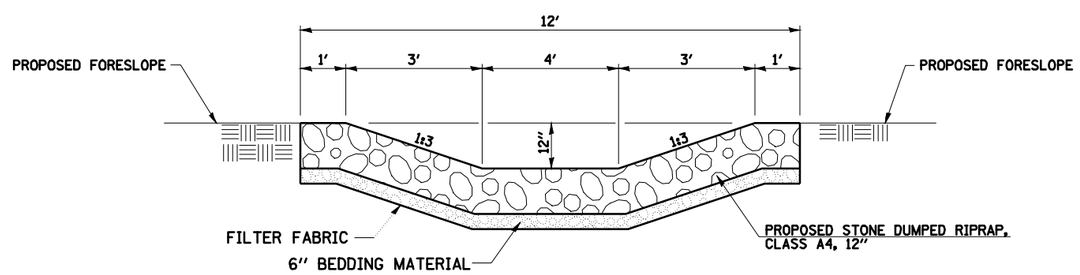

SECTION A-A

D-98-508-07

FILE NAME = c:\pw_work\PWIDOT\LAUGHLINRL\d0134498\sht details.dgn	USER NAME = laughlinrl	DESIGNED -	REVISED -	STATE OF ILLINOIS DEPARTMENT OF TRANSPORTATION	SPECIAL DETAILS PIPE DRAIN OUTLET AND RIPRAP SWALES	F.A.P RTE.	SECTION	COUNTY	TOTAL SHEETS	SHEET NO.
		DRAWN -	REVISED -			614	144(B-1, B-2)	CASS, MASON	351	84
	PLOT SCALE = 100.0000 ' / IN.	CHECKED -	REVISED -					CONTRACT NO. 72A76		
	PLOT DATE = Mar-31-2009 07:52:42AM	DATE -	REVISED -		SCALE: SHEET NO. OF SHEETS STA. TO STA.	FED. ROAD DIST. NO.	ILLINOIS	FED. AID PROJECT		

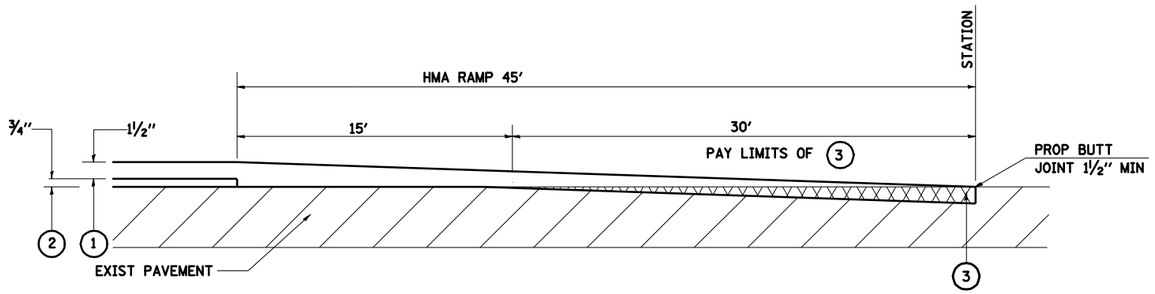

LEGEND

1 PROPOSED HMA SURFACE COURSE

2 PROPOSED LEVELING BINDER COURSE

3 PROPOSED HMA SURFACE REMOVAL - BUTT JOINT

MAINLINE BUTT JOINT

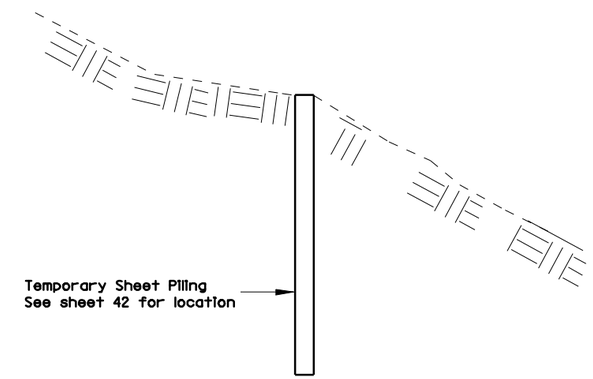

TEMPORARY SHEET PILING DETAILS

Temporary Sheet Piling

S = 29 In /ft.^{3}

Minimum Embedment 36'-0"

Est. Horiz. Length 61'-0"

Est. Length 36'-0"

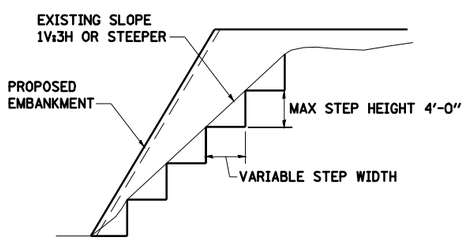

EXISTING 1V:3H OR STEEPER SLOPES SHALL BE STEPPED PRIOR TO PLACING NEW EMBANKMENT.

TYPICAL FILLSLOPE STEPPING DETAIL

NOTE: THIS EXCAVATION REQUIRED FOR BENCHING THE PROPOSED EMBANKMENT INTO THE EXISTING SLOPE WILL NOT BE MEASURED FOR PAYMENT BUT SHALL BE CONSIDERED AS A REQUIREMENT AND THE COST INCLUDED IN THE CONTRACT UNIT BID PRICE PER CUBIC YARD FOR "EARTH EXCAVATION" OF THE MATERIAL MEASURED FOR PAYMENT IN ACCORDANCE WITH SECTION 202 OF THE STANDARD SPECIFICATIONS.

D-98-508-07

FILE NAME = c:\pw_work\PWIDOT\LAUGHLINRL\d0134498\sht details.dgn	USER NAME = laughlinrl	DESIGNED -	REVISED -	STATE OF ILLINOIS DEPARTMENT OF TRANSPORTATION	SPECIAL DETAILS: HMA BUTT JOINT, FILLSLOPE STEPPING & TEMP SHEET PILING DETAILS	F.A.P RTE.	SECTION	COUNTY	TOTAL SHEETS	SHEET NO.
		DRAWN -	REVISED -			614	144(B-1, B-2)	CASS, MASON	351	85
	PLOT SCALE = 100.0000 ' / IN.	CHECKED -	REVISED -					CONTRACT NO. 72A76		
	PLOT DATE = Mar-31-2009 07:52:44AM	DATE -	REVISED -		SCALE: SHEET NO. OF SHEETS STA. TO STA.	FED. ROAD DIST. NO.	ILLINOIS	FED. AID PROJECT		

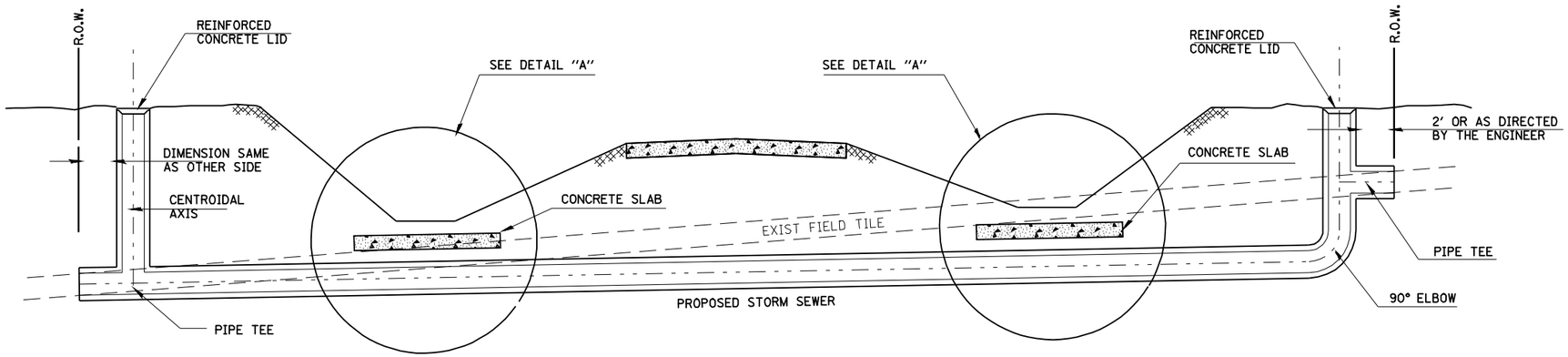

GENERAL NOTES

1. FIELD TILE SHALL BE REPLACED IN ACCORDANCE WITH SECTION 611 OF THE STANDARD SPECIFICATIONS. THE COST PER CONTRACT UNIT PRICE OF ITEMS INCLUDED IN THIS CONTRACT SHALL BE PAID FOR AS STATED IN SECTION 611 OF THE STANDARD SPECIFICATIONS. IF THE CONTRACT UNIT PRICE IS NOT INCLUDED IN THIS CONTRACT, PAYMENT FOR THIS WORK WILL BE IN ACCORDANCE WITH ARTICLE 109.04 OF THE STANDARD SPECIFICATIONS.
2. THE DIAMETER OF THE PROPOSED STORM SEWER SHALL BE EQUAL TO OR GREATER THAN THE EXISTING FIELD TILE.
3. ALL EXISTING FIELD TILE SHALL BE REPLACED WITH STORM SEWER OF THE TYPE REQUIRED FOR BY THE DEPTH OF COVER. THE LINEAL MEASUREMENT WILL BE ALONG THE CENTRODIAL AXIS AND INCLUDE ALL BENDS, ELBOWS, OR PIPE TEE'S WHICH ARE REQUIRED.
4. THE REINFORCED CONCRETE LID SHALL BE MISCELLANEOUS CONCRETE OR PRECAST REINFORCED CONCRETE AND THE COST WILL BE INCLUDED IN THE CONTRACT UNIT PRICE FOR THE PROPOSED STORM SEWER.
5. THE CONCRETE SLAB AND CONCRETE HEADWALL SHALL BE PAID AT THE CONCTRACT UNIT PRICE PER CUBIC YARD FOR MISCELLANEOUS CONCRETE. THE COST OF FURNISHING AND PLACING THE WELDED WIRE FABRIC, GALVANIZED HARDWARE CLOTH, MACHINE BOLTS, WASHERS AND NUTS SHALL BE INCLUDED IN THE CONTRACT UNIT PRICE FOR MISCELLANEOUS CONCRETE.
6. EXISTING FIELD TILE SHALL BE LOCATED BOTH HORIZONTALLY AND VERTICALLY BY THE USE OF AN EXPLORATION TRENCH. THIS TRENCH SHALL NOT BE LESS THAN 52 INCHES IN DEPTH, MEASURED FROM THE EXISTING GROUND ELEVATION. THE WIDTH OF THE TRENCH SHALL BE SUFFICIENT TO ALLOW PROPER INVESTIGATION OF THE ENTIRE TRENCH.
7. THE EXISTING TILE DRAINAGE SYSTEM SHALL BE MAINTAINED IN A FUNCTIONAL CONDITION BY IMMEDIATE CONSTRUCTION OF THE NEW STORM SEWER SYSTEM OR BY REPAIRING THE CUT TILE WITH THE SAME DIAMETER UNTIL SUCH TIME AS THE NEW SYSTEM IS COMPLETED.

DETAIL "A"

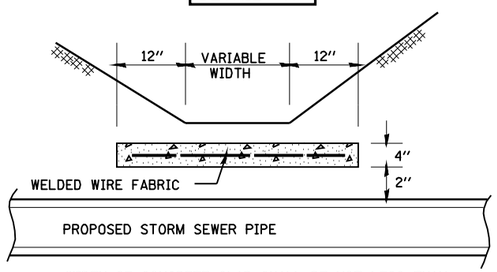

WIDTH OF CONCRETE SLAB SHALL BE NOT LESS THAN THE EXTERNAL DIAMETER OF THE PIPE PLUS 18 INCHES.

REINFORCED CONCRETE LID DETAIL

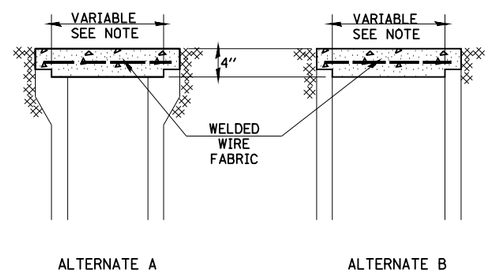

NOTE : DIMENSIONS WILL VARY TO MATCH NOMINAL SIZE OF PROPOSED STORM SEWER

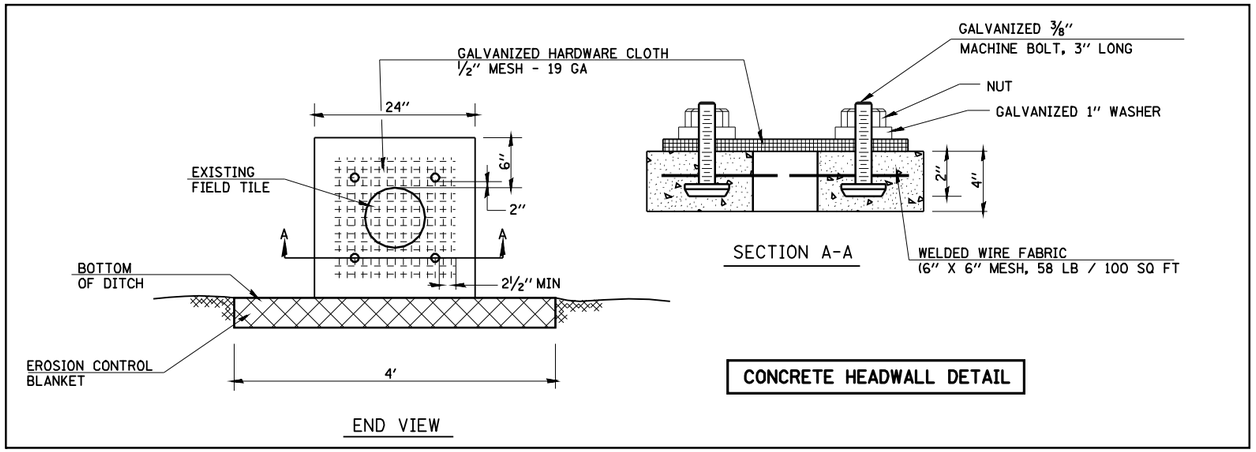

CONCRETE HEADWALL DETAIL

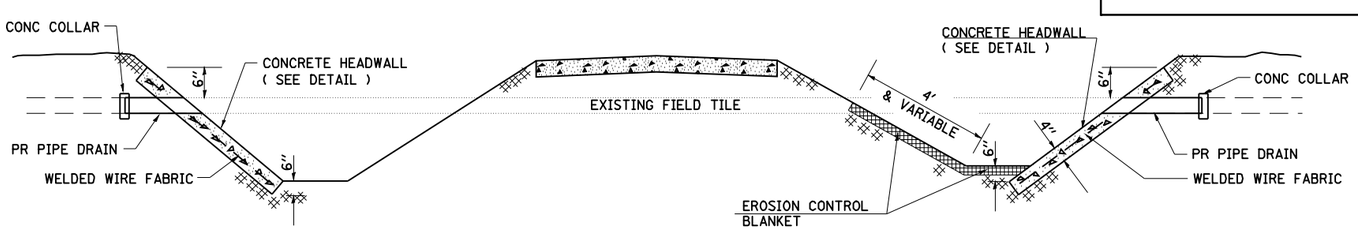

D-08-508-07

FILE NAME = c:\pw_work\PWIDOT\LAUGHLINRL\d0134498\sntdetails.dgn	USER NAME = laughlinrl	DESIGNED -	REVISED -	STATE OF ILLINOIS DEPARTMENT OF TRANSPORTATION	SPECIAL DETAILS FIELD TILE REPLACEMENT	F.A.P RTE.	SECTION	COUNTY	TOTAL SHEETS / SHEET NO.
	PLOT SCALE = 100.0000 ' / IN.	DRAWN -	REVISED -			614	144(B-1, B-2)	CASS, MASON	351 / 86
	PLOT DATE = Mar-31-2009 07:52:45AM	CHECKED -	REVISED -					CONTRACT NO. 72A76	
		DATE -	REVISED -		SCALE: SHEET NO. OF SHEETS STA. TO STA.	FED. ROAD DIST. NO.	ILLINOIS	FED. AID PROJECT	

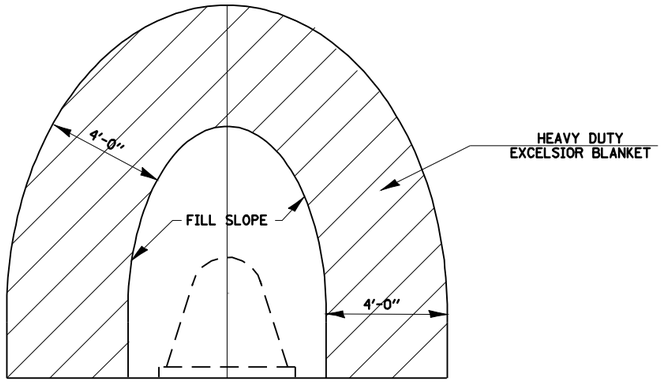

HEAVY DUTY EXCELSIOR BLANKET
AROUND FLARED END SECTION
STD 542301

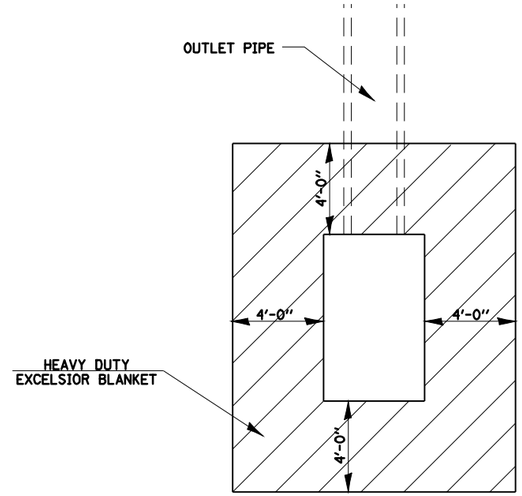

HEAVY DUTY EXCELSIOR BLANKET AROUND
HEADWALL FOR PIPE UNDERDRAIN
STD 601101

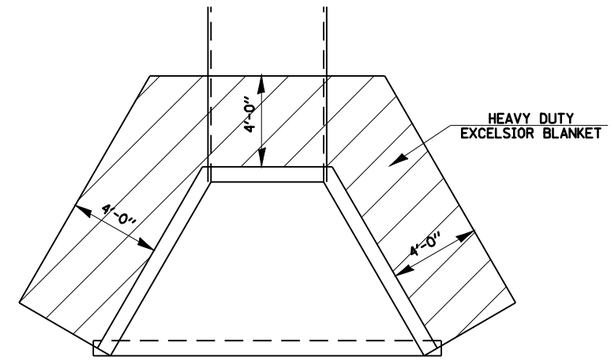

HEAVY DUTY EXCELSIOR BLANKET AROUND
HEADWALLS & CULVERT WINGWALLS

THE BACKSLOPE PROTECTION SHALL BE CENTERED
ON THE NATURAL SWALES.
THE LOCATIONS AND DIMENSIONS OF THE BACKSLOPE
PROTECTION SHOWN ON THE PLANS WILL BE ADJUSTED
BY THE ENGINEER TO FIT FIELD CONDITIONS.

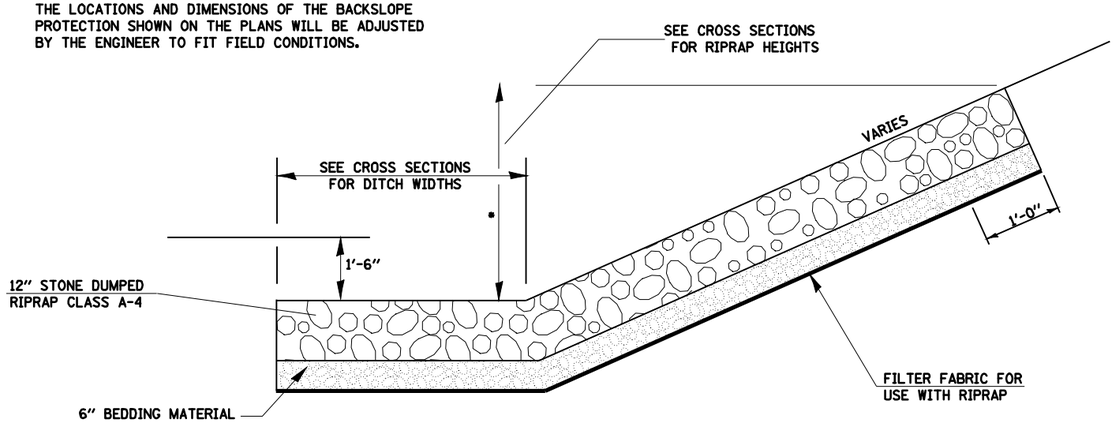

SPECIAL EROSION PROTECTION

OPTION 1

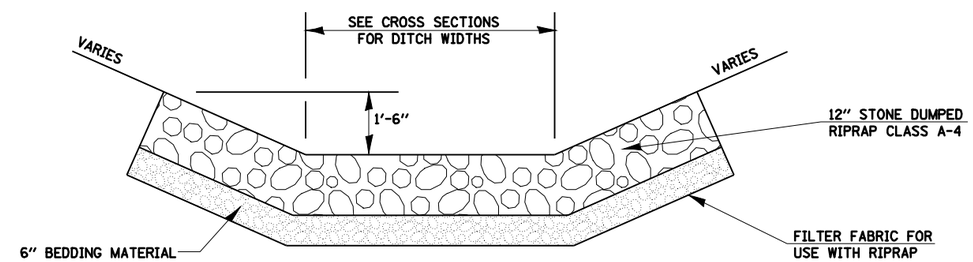

TYPICAL STONE RIPRAP - DITCH LINING

SPECIAL EROSION PROTECTION

•THE LIMITS OF THE RIPRAP ARE TO BE DETERMINED
IN THE FIELD BY THE ENGINEER.

D-98-508-07

FILE NAME = c:\pw_work\PWIDOT\LAUGHLINRL\d0134498\sptdetails.dgn	USER NAME = laughlinrl	DESIGNED -	REVISED -	STATE OF ILLINOIS DEPARTMENT OF TRANSPORTATION	SPECIAL DETAILS PERMANENT EROSION PROTECTION	F.A.P RTE.	SECTION	COUNTY	TOTAL SHEETS	SHEET NO.
		DRAWN -	REVISED -			614	144(B-1, B-2)	CASS, MASON	351	87
	PLOT SCALE = 100.0000 ' / IN.	CHECKED -	REVISED -					CONTRACT NO. 72A76		
	PLOT DATE = Mar-31-2009 07:52:48AM	DATE -	REVISED -		SCALE: SHEET NO. OF SHEETS STA. TO STA.	FED. ROAD DIST. NO.	ILLINOIS	FED. AID PROJECT		

STORM WATER POLLUTION PREVENTION PLAN

Route: FAP 614 Marked: ILL 78

Section: 144 (B-1) Project No.: NA

County: CASS, MASON Contract No.: 72A76

This plan has been prepared to comply with the provision of the NPDES Permit Number ILR10_____ issued by the Illinois Environmental Protection Agency for storm water discharges from construction site activities.

I certify under penalty of law that this document and all attachments were prepared under my direction or supervision in accordance with a system designed to assure that qualified personnel gathered and evaluated the information submitted. Based on my inquire of the person or persons who manage the system, or those persons directly responsible for gathering the information submitted, is, to the best of my knowledge and belief, true, accurate, and complete. I am aware that there are significant penalties for submitting false information, including the possibility of fine and imprisonment for knowing violations.

(Signature) (Date) 3-27-09

Region 4 Engineer
(Title)

Note: The above boxed in area will be filled out by IDOT - Construction after the award of the contract to obtain the required NPDES permit.

The following plan was established and included in these plans to direct the Contractor in the placement of temporary erosion control systems and to provide a storm water pollution prevention plan for compliance under NPDES. The Contractor shall abide to all requirements within this plan as part of the contract.

The purpose of this plan is to prevent / minimize siltation within the construction zone and to eliminate sediments from entering and leaving the construction zone by utilizing proper temporary erosion control systems and providing ground cover within a reasonable time.

Certain items, as shown in this plan and referenced by the legend, shall be placed by the Contractor at the beginning of construction. Other items shall be placed by the Contractor as directed by the Engineer on a case by case situation resulting from the Contractor's sequence of activities, time of the year, and expected weather conditions.

The Contractor shall place permanent erosion control systems and seeding within a reasonable amount of time; therefore, reducing the amount of area being open to the possibility of erosion and reducing the amount of temporary erosion control systems and temporary seeding. The Resident Engineer will determine if temporary erosion control systems shown in the plan can be deleted, the size of the proposed ditch checks, the proper method of installation, and if any additional temporary erosion control systems shall be added which are not included in this plan. The Contractor shall perform all work as directed by the Engineer and as shown in special details and in Standard 280001 of the plans.

The special provisions Temporary Seeding, Temporary Erosion Control Seeding, and Temporary Erosion Control additionally supplement this plan.

All disturbed areas having high potential for erosion, as determined by the Engineer, shall be temporarily seeded or permanently seeded by October 1st of each construction year and shall not be reopened until after the winter shutdown period.

SITE DESCRIPTION

Description of Construction Activity:

1. The proposed project consists of replacing three bridges on IL 78 just north of Chandlerville with a single larger bridge, a smaller bridge, and one box culvert. The project will be partially constructed on new alignment, and partially on the existing alignment and will include reconstruction / resurfacing of approx. 1.9 mi of IL 78.

2. Construction consists of grading, constructing bridges / culverts, HMA pavement, widening, HMA resurfacing, placing aggregate shoulders and other miscellaneous work to complete improvements to the proposed roadways.

Description of Intended Sequence of Major Construction Activities Which Will Disturb Earth and Lead to Possible Erosion for Major Portions of the Construction Site:

1. Tree removal will be completed to clear approximately 18.5 acres of wooded land.

2. Excavation will be completed along the entire length to grade out for proposed roadway ditches and waterways.

3. Excavation will also be completed in proposed cut sections to lower the existing ground elevation to meet the proposed roadway grade/vertical alignment.

4. Embankment will be completed in fill areas to raise the existing ground elevation to meet the proposed roadway foreslope and backslope.

5. Drainage structures will be installed before and/or during the construction of the excavation and embankment to allow proper drainage across the proposed two lane facility.

6. Placement, maintenance, removal and proper clean-up of temporary erosion control, such as erosion control fence, hay or straw bale ditch checks, riprap ditch checks, sediment basins, temporary seeding, etc.

7. Placement of permanent erosion control, such as riprap ditch lining, riprap stilling basins, riprap dry dams, excelsior blanket, seeding, etc.

8. Final grading, paving and other miscellaneous items.

Area of Construction Site:
The total drainage area entering and including the construction site is estimated to be approx. 5.250 sq miles in which 65 acres will be disturbed by excavation, grading or other activities.

Other Reports, Studies and Plans which Aid in the Development of this Storm Water Pollution Prevention Plan as Referenced Documents:

1. Estimated run-off coefficients are contained in the project drainage study which were utilized for proposed placement of the temporary erosion control systems.

2. Information on the soils within the site was obtained from field reviews which were utilized for proposed placement of the temporary erosion control systems.

3. Site maps indicating drainage patterns and approximate slopes were contained in the project design report, USGS drainage maps, project drainage study, and project plan documents were all utilized for proposed placement of the temporary erosion control systems.

Drainage Tributaries Receiving Water from this Construction Site:

1. Sangamon River

2. Sangamon River Overflow (Big Lake)

3. Wolf Lake (Fish Creek)

D-96-506-07

FILE NAME = kt\07\07021\v8-ns\shtswpp.dgn	USER NAME = CFC__	DESIGNED -	REVISED - CAD	STATE OF ILLINOIS DEPARTMENT OF TRANSPORTATION	STORM WATER POLLUTION PREVENTION PLAN	F.A.P RTE.	SECTION	COUNTY	TOTAL SHEETS	SHEET NO.
		DRAWN -	REVISED - JCN			614	144(B-1)	CASS, MASON	351	88
	PLOT SCALE = 20.0000 ' / IN.	CHECKED -	REVISED -					CONTRACT NO. 72A76		
	PLOT DATE = 03/26/2009	DATE -	REVISED -		SCALE: SHEET NO. 1 OF 12 SHEETS STA. TO STA.	FED. ROAD DIST. NO.	ILLINOIS	FED. AID PROJECT		

CONTROLS - EROSION CONTROLS AND SEDIMENT CONTROLS

Description of Stabilization Practices at the Beginning of Construction:

1. The area between the existing and proposed right-of-way/temporary easement boundaries and limits of the project will be improved and managed for the purposes of controlling erosion within the area, reducing water flow by temporary diversion and minimizing siltation into the construction zone, and establishing vegetative cover which will become permanent vegetation and act as an erosion barrier. Work at the beginning of construction will consist of the following:

   (a) Areas of existing vegetation (woods and grasslands) outside the proposed construction slope limits shall be identified for preserving and shall be protected from mowing, brush cutting, tree removal and other activities which would be detrimental to their maintenance and development.

   (b) Dead, diseased, or unsuitable vegetation within the site shall be removed as directed by the Engineer, along with required tree removal.

   (c) As soon as reasonable access is available (such as trees cleared) to all locations where water drains away from the project, sediment basins, riprap ditch checks, temporary ditch checks, and/or erosion control fence shall be installed as called out in this plan and directed by the Engineer.

   (d) Bare and sparsely vegetated ground in highly erodable areas as determined by the Engineer shall be temporarily seeded at the beginning of construction where no construction activities are immediately expected as stated in the special provision "Temporary Erosion Control Seeding".

   (e) Immediately after tree removal is completed in certain areas which are highly erodable areas as determined by the Engineer, the areas shall be temporarily seeded where no construction activities are immediately expected as stated in the special provision "Temporary Erosion Control Seeding".

   (f) At locations where a significant amount of water drains into the construction zone from outside areas (adjacent landowners), erosion control fence, temporary ditch checks, or riprap ditch checks will be utilized to locally divert water, reduce flow rates, and collect outside siltation inside the right-of-way line. Erosion control items will not be allowed to be installed to cause flooding to upstream private property which could cause crop damages or other undesireable conditions.

2. Establishment of these temporary erosion control measures will have additional benefits to the project. Desirable grass seed will become established in these areas and will spread seeds onto the construction site until permanent seeding/mowing and overseeding can be complete.

3. A third benefit of these filter areas is that they will begin to provide a screen and buffer. They will help protect the construction site from winds and excess sun and mitigate construction noise and dust.

Description of Stabilization Practices During Construction:

1. During roadway construction, areas outside the construction slope limits as outlined previous herein shall be protected from damaging effects of construction. The Contractor shall not use this area for staging (except as designated on the plans or directed by the Engineer), parking of vehicles or construction equipment, storage of materials, or other construction related activities.
   (a) Within the construction zone, critical areas which have high flows of water as determined by the Engineer shall remain undisturbed until full scale construction is underway to prevent unnecessary soil erosion.
   (b) Top soil and earth stockpiles shall be temporarily seeded if they are to remain unused for more than fourteen days.
   (c) As the Contractor constructs a portion of roadway in a fill section, he/she shall follow the following steps as directed by the Engineer:

   i. Place temporary erosion control systems at locations where water leaves and enters the construction zone
   ii. Temporary seed highly erodable areas outside the construction slope limits
   iii. Construct roadside ditches and provide temporary erosion control systems
   iv. Temporary divert water around proposed culvert locations
   v. Build necessary embankment at culvert locations and then excavate and place culvert
   vi. Continue building up the embankment to the proposed grade while at the same time place permanent erosion control such as riprap ditch lining and conduct final shaping to the slopes

   (d) The Contractor shall immediately follow major earth moving operations with final grading equipment. After the major earth spread operation has moved to a new location, final grading shall be completed within fourteen days. If grading is not completed within fourteen days, all major earth moving operations will be stopped, as directed by the Engineer, until disturbed areas are final graded and seeded.

   (e) Excavated areas and embankments shall be permanently seeded when final graded. If not, they shall be temporarily seeded as stated in the special provision "Temporary Erosion Control Seeding".

   (f) Construction equipment shall be stored and fueled only at designated locations. All necessary measures shall be taken to contain any fuel or pollution run-off in compliance with EPA water quality regulations. Leaking equipment or supplies shall be immediately repaired or removed from the site.

   (g) The Resident Engineer shall inspect the project daily during activities and weekly or after large rains during the winter shutdown period. The project shall additionally be inspected by the Construction Field Engineer on a bi-weekly basis to determine that erosion control efforts are in place and effective and if other control work is necessary.

   (h) Sediment collected during construction by the various temporary erosion control systems shall be disposed of on the site on a regular basis as directed by the Engineer. The cost of this maintenance will be paid for in accordance with Article 109.04 of the Standard Specifications.

   (i) The temporary erosion control systems shall be removed as directed by the Engineer after use is no longer needed or no longer functioning. The costs of this removal shall be included in the unit bid price for the temporary erosion control system. No additional compensation will be allowed.

Description of Structural Practices After Final Grading:

1. Temporary erosion control systems shall be left in place with proper maintenance until permanent erosion control is in place and working properly and all proposed turf areas seeded and established with a proper stand.

2. Once permanent erosion control systems as proposed in the plans are functional and established, temporary items shall be removed, cleaned up, and disturbed turf reseeded. Temporary riprap ditch checks will be allowed to remain in place where approved by the Engineer.

Maintenance after Construction:

1. Construction is complete after acceptance is received at the final inspection.

2. Areas will be inspected on a regular basis by IDOT District 6 Bureau of Operations.

3. Maintenance crews will perform regular mowings to aid in keeping weeds down and establishing a good roadside seed stand.

4. Maintenance crews will also aid in any ditch lining maintenance or in any drainage problems.

5. All maintenance will be conducted at times when weather conditions will not cause site damage.

DOCUMENTATION

1. A report summarizing the scope of the inspection, name(s) and qualifications of personnel making the inspection, date(s) of the inspection, major observations relating to the implementation of this storm water pollution prevention plan, and actions taken in accordance with Section 4.b. shall be made and retained as part of the plan for at least three years after the date of inspection. The report shall be signed in accordance with part VI.G of the general permit.

2. If any violation of the provisions of this plan is identified during the conduct of the construction work covered by this plan, the Resident Engineer or Resident Technician shall complete and file an "Incident of Noncompliance (ION)" report for the identified violation. The Resident Engineer or Resident Technician shall use forms provided by the Illinois Environmental Protection Agency and shall include specific information on the noncompliance, actions which were taken to prevent any further causes of noncompliance, and a statement detailing any environmental impact which may have resulted from the noncompliance. All reports of noncompliance shall be signed by a responsible authority in accordance with Part VI.G. of the general permit. The report of noncompliance shall be mailed to the following address:

   Illinois Environmental Protection Agency
   Division of Water Pollution Control
   2200 Churchill Road, P.O. Box 19276
   Springfield, IL 62794-9276
   Attn: Compliance Assurance Section

CONTRACTOR CERTIFICATION STATEMENT

This certification statement is part of the Storm Water Pollution Plan for the project described below in accordance with NPDES Permit No. ILR10_____, issued by the Illinois Environmental Protection Agency on _____.

Route: FAP 614 Marked: ILL 78

Section: 144 (B-1, B-2) Project No.: NA

County: CASS, MASON Contract No.: 72A76

I certify under penalty of law that I understand the terms of the general National Pollutant Discharge Elimination System (NPDES) permit that authorizes the storm water discharges associated with industrial activity from the construction site identified as part of this certification.

Signature_____ Date_____

Title_____

Name of Firm_____

Street Address_____

City, State, Zip_____

Phone Number_____

Note: The above boxed in area shall be filled out by the Contractor after the award of the contract to obtain the required NPDES Permit from IEPA. This is a requirement for this contract.

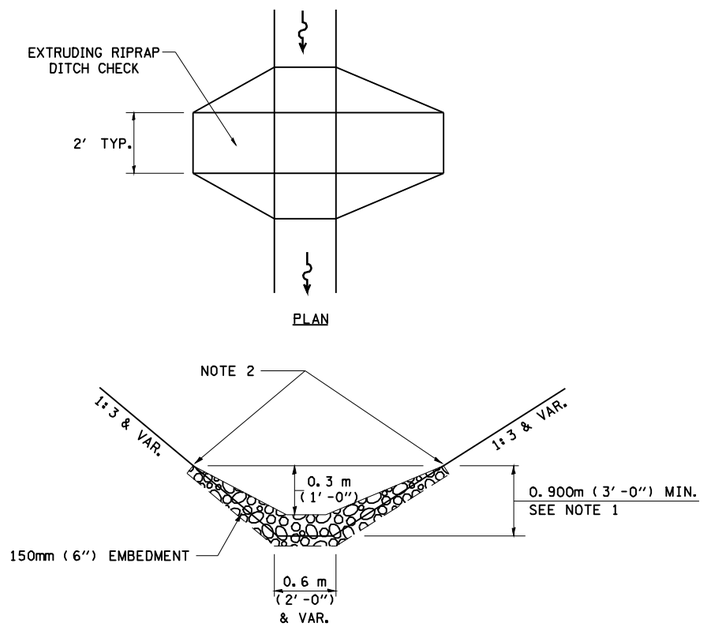

OPTION 1

(EXTRUDING DITCH CHECK)
RECOMMENDED FOR AREAS
W/ RIPRAP DITCH LINING

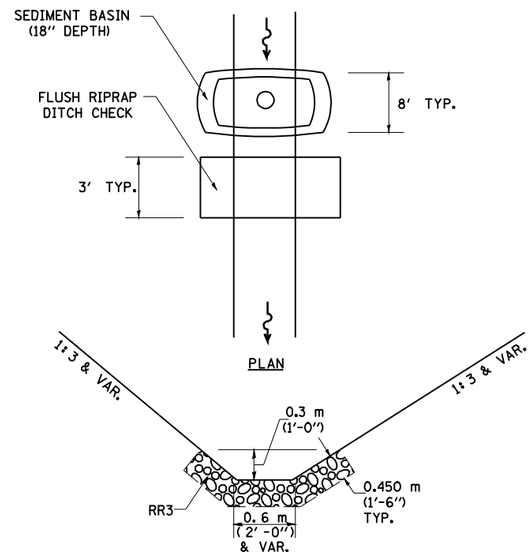

OPTION 2

(FLUSH DITCH CHECK)
RECOMMENDED FOR AREAS
W/O RIPRAP DITCH LINING

STONE DUMPED RIPRAP DITCH CHECK

(TYPICAL & OPTIONS 1 & 2
AS DIRECTED BY THE ENGINEER)

NOTE 1: RIPRAP SHALL EXTEND FAR ENOUGH UP THE SLOPES TO ALLOW 0.3m (1') OVERTOPPING TO AVOID ERODING AROUND THE EDGES OF THE RIPRAP.

NOTE 2: ENDS SHALL BE TIED INTO SLOPES.

LEGEND FOR STORM WATER POLLUTION PREVENTION PLAN

ITEM	SYMBOL
AGGREGATE (EROSION CONTROL) [STONE DUMPED RIPRAP DITCH CHECKS: Height = 0.6m (2')]	
TEMPORARY DITCH CHECKS	
INLET PIPE PROTECTION (I&PP)	
DIRECTION OF DITCH FLOW	
EROSION CONTROL FENCE	
EARTH EXCAVATION FOR EROSION CONTROL (SEDIMENT BASINS)	
PRESERVE EXISTING TREES, WOODLANDS, AND UNDERSTORY (OUTSIDE CONSTRUCTION LIMITS)	
ITEM PLACED AT BEGINNING OF CONSTRUCTION (Requirement)	* ITEM *
ITEM PLACED AS DIRECTED BY ENGINEER (When required by situation)	ITEM
DIRECTION OF OVERLAND FLOW	

GENERAL NOTES:

All items shall be constructed as shown on this sheet, on Standard 280001, and as directed by the Engineer.

The symbology on the STORM WATER POLLUTION PREVENTION PLAN sheets does not represent the size or quantity of bales, for number of bales refer to details and notes shown on this sheet and/or as directed by the Engineer.

THE CONTRACTOR SHALL INSTALL DITCH CHECKS AS DIRECTED BY THE ENGINEER. IF THE ENGINEER ELECTS TO UTILIZE FLUSH RIPRAP DITCH CHECKS IN LIEU OF TEMPORARY DITCH CHECKS AS SHOWN ON THE FOLLOWING PLAN SHEETS, THE SPACING SHOULD BE DOUBLED.

D-96-506-07

FILE NAME = c:\pw_work\PWIDOT\LAUGHLINRL\d0134498\sntswppp.dgn	USER NAME = laughlinrl	DESIGNED -	REVISED -	CAD	2AUG99	STATE OF ILLINOIS DEPARTMENT OF TRANSPORTATION	STORM WATER POLLUTION PREVENTION PLAN	F.A.P RTE.	SECTION	COUNTY	TOTAL SHEETS	SHEET NO.
		DRAWN -	REVISED -	JCN	MAR 2004			614	144(B-1)	CASS, MASON	351	91
	PLOT SCALE = 40.0000 ' / IN.	CHECKED -	REVISED -							CONTRACT NO. 72A76		
	PLOT DATE = Mar-31-2009 07:52:58AM	DATE -	REVISED -				SCALE: SHEET NO. 4 OF 12 SHEETS STA. TO STA.	FED. ROAD DIST. NO.	ILLINOIS	FED. AID PROJECT		

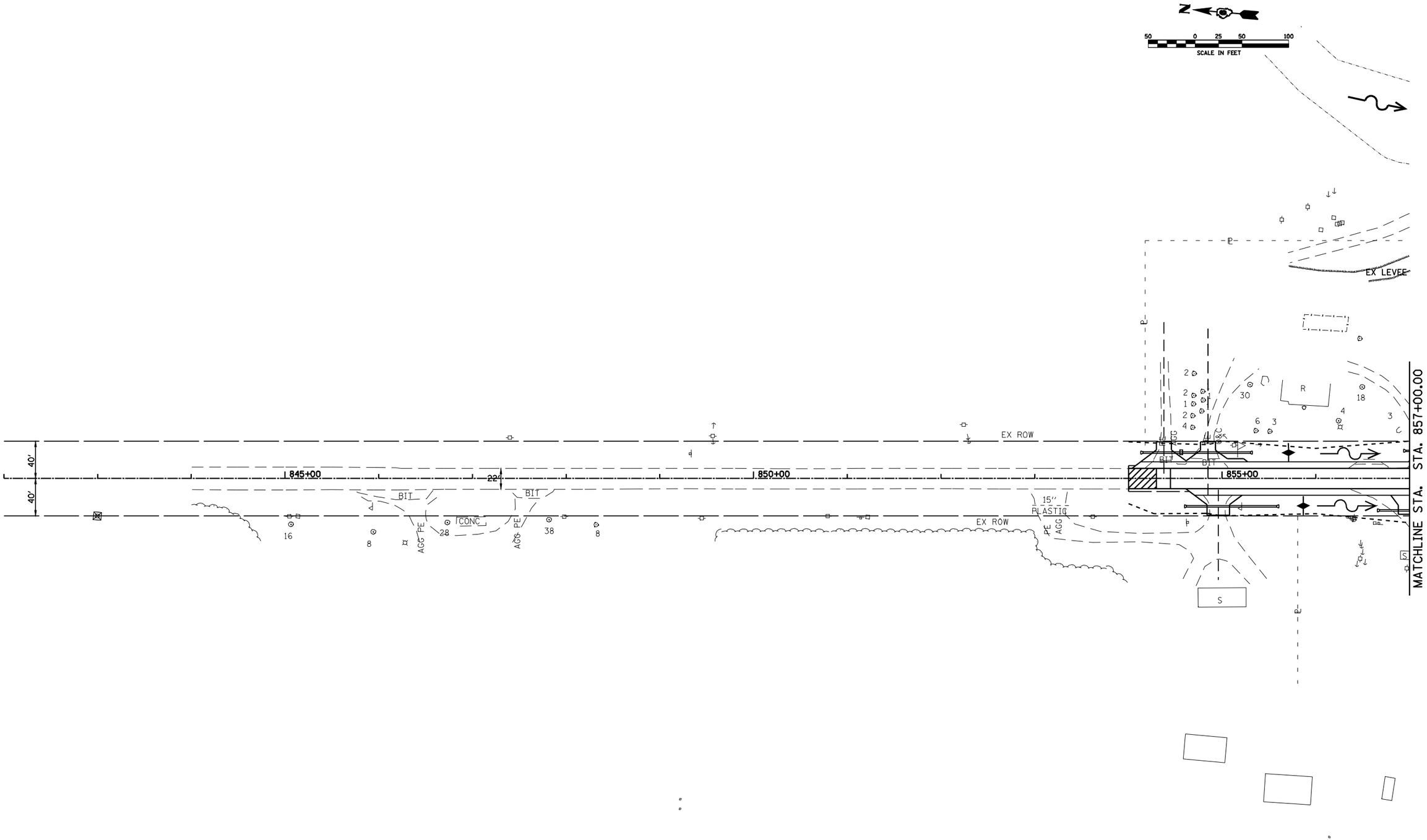

NOTE: PR RIPRAP OUTLINES SHOWN ON SWPPP SHEETS FOR CLARITY OF TEMP EROSION CONTROL ITEMS. FOR MORE RIPRAP DETAIL, SEE PLAN SHEETS.

• CASS AND MASON COUNTIES

FILE NAME = c:\pw_work\PWIDOT\LAUGHLINRL\d0134498\nppds50scale.dgn	USER NAME = laughlinrl	DESIGNED -	REVISED -
		DRAWN -	REVISED -
	PLOT SCALE = 100.0000 ' / IN.	CHECKED -	REVISED -
	PLOT DATE = Mar-31-2009 07:53:00AM	DATE -	REVISED -

STATE OF ILLINOIS
DEPARTMENT OF TRANSPORTATION

SWPPP - EROSION CONTROL PLAN SHEET

SCALE: | SHEET NO. 5 OF 12 SHEETS | STA. 854+00 TO STA. 857+00

F.A.P RTE.	SECTION	COUNTY	TOTAL SHEETS	SHEET NO.
614	144(B-1,B-2)	•	351	92

CONTRACT NO. 72A76

FED. ROAD DIST. NO. | ILLINOIS | FED. AID PROJECT

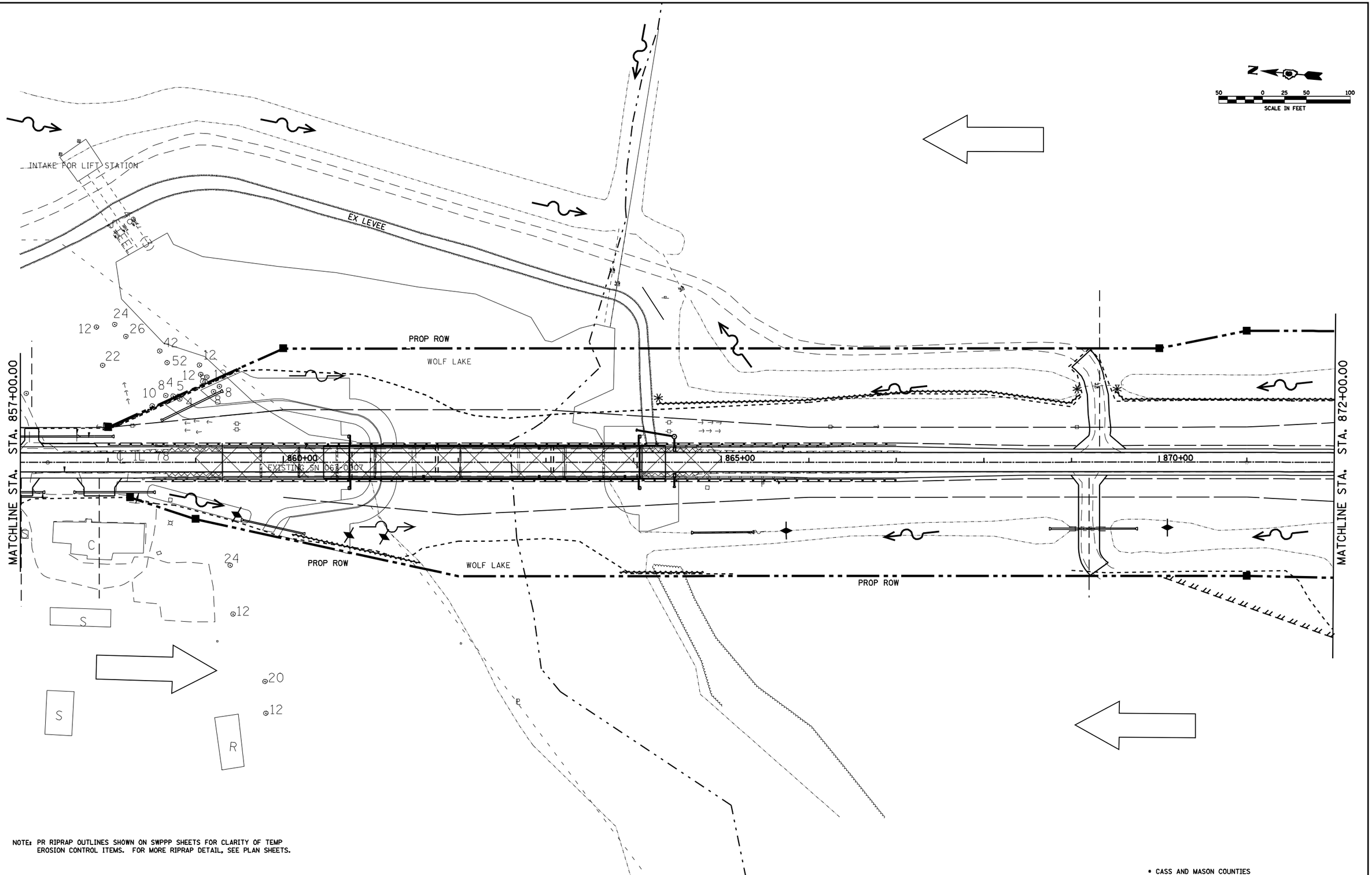

NOTE: PR RIPRAP OUTLINES SHOWN ON SWPPP SHEETS FOR CLARITY OF TEMP EROSION CONTROL ITEMS. FOR MORE RIPRAP DETAIL, SEE PLAN SHEETS.

• CASS AND MASON COUNTIES

FILE NAME = c:\pw_work\PWIDOT\LAUGHLINRL\d0134498\opds50scale.dgn	USER NAME = laughlinrl	DESIGNED -	REVISED -
		DRAWN -	REVISED -
	PLOT SCALE = 100.0000 ' / IN.	CHECKED -	REVISED -
	PLOT DATE = Mar-31-2009 07:53:02AM	DATE -	REVISED -

STATE OF ILLINOIS
DEPARTMENT OF TRANSPORTATION

SWPPP - EROSION CONTROL PLAN SHEET

SCALE: | SHEET NO. 6 OF 12 SHEETS | STA. 857+00 TO STA. 872+00

F.A.P RTE.	SECTION	COUNTY	TOTAL SHEETS	SHEET NO.
614	144(B-1,B-2)	•	351	93

CONTRACT NO. 72A76

FED. ROAD DIST. NO. | ILLINOIS | FED. AID PROJECT

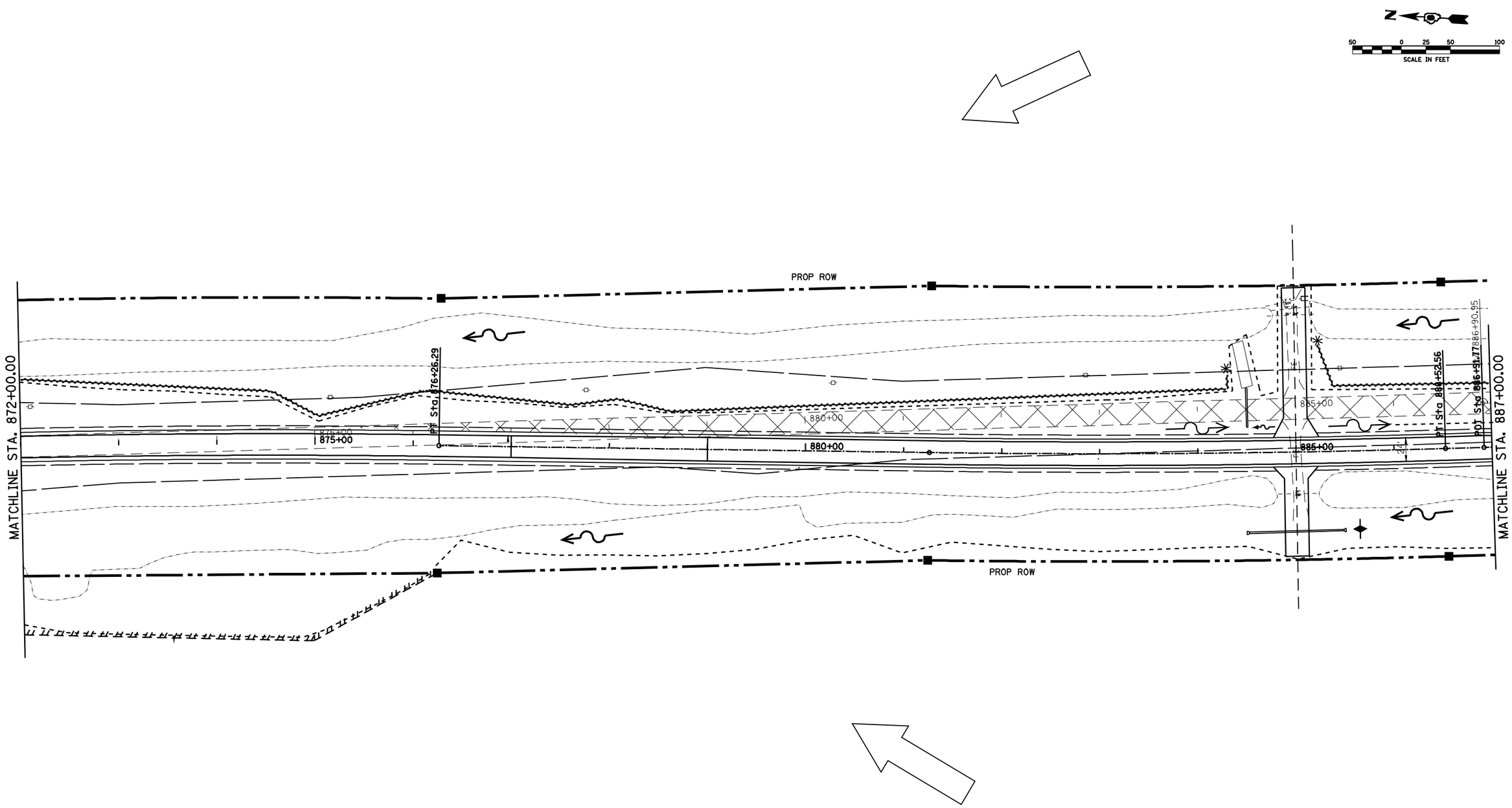

NOTE: PR RIPRAP OUTLINES SHOWN ON SWPPP SHEETS FOR CLARITY OF TEMP EROSION CONTROL ITEMS. FOR MORE RIPRAP DETAIL, SEE PLAN SHEETS.

• CASS AND MASON COUNTIES

FILE NAME = c:\pw_work\PWIDOT\LAUGHLINRL\d0134498\mppda50scale.dgn	USER NAME = laughlinrl	DESIGNED -	REVISED -
		DRAWN -	REVISED -
	PLOT SCALE = 100.0000 ' / IN.	CHECKED -	REVISED -
	PLOT DATE = Mar-31-2009 07:53:05AM	DATE -	REVISED -

STATE OF ILLINOIS
DEPARTMENT OF TRANSPORTATION

SWPPP - EROSION CONTROL PLAN SHEET

SCALE: | SHEET NO. 7 OF 12 SHEETS | STA. 872+00 TO STA. 887+00

F.A.P RTE.	SECTION	COUNTY	TOTAL SHEETS	SHEET NO.
614	144(B-1,B-2)	•	351	94

CONTRACT NO. 72A76

FED. ROAD DIST. NO. | ILLINOIS | FED. AID PROJECT

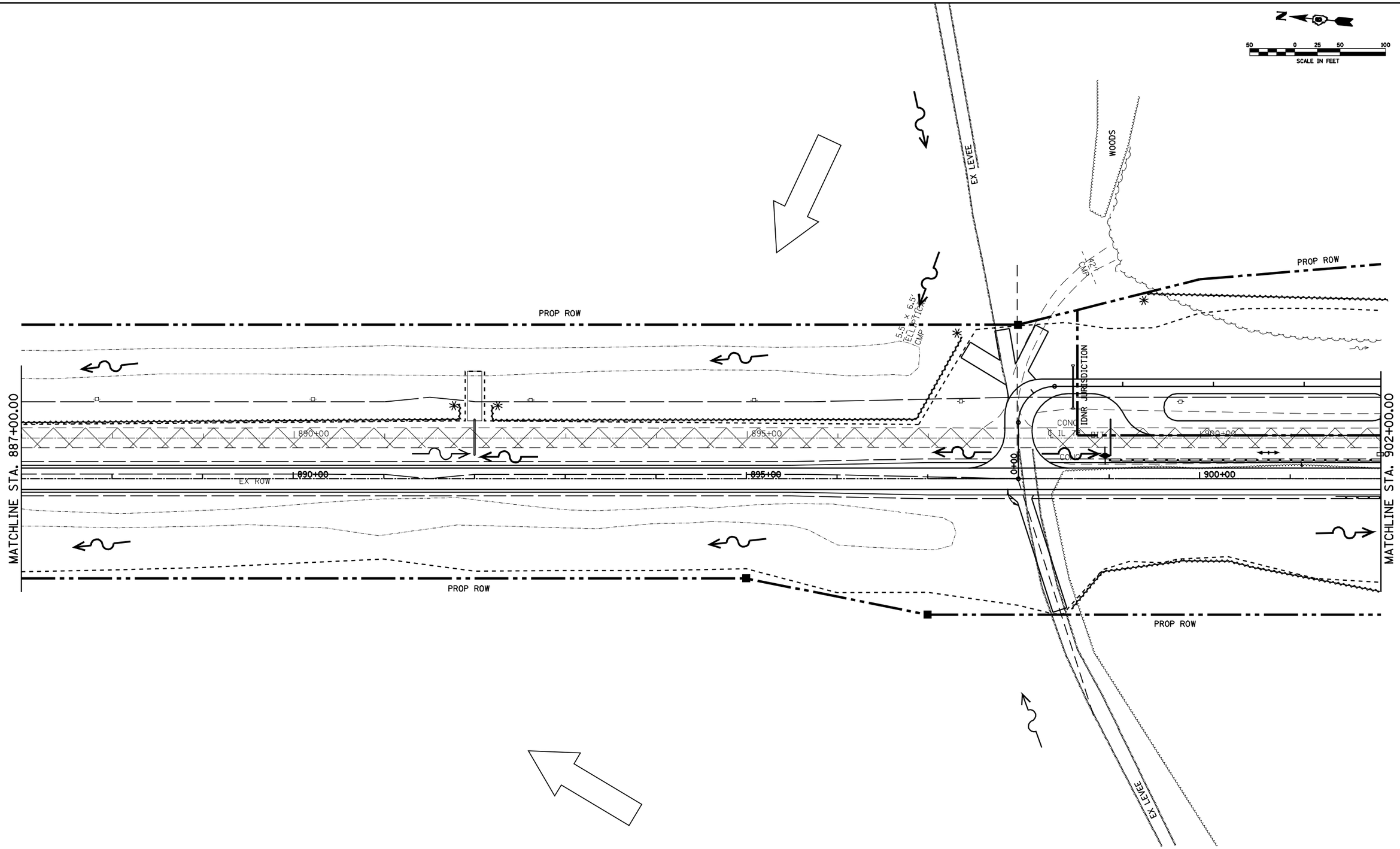

NOTE: PR RIPRAP OUTLINES SHOWN ON SWPPP SHEETS FOR CLARITY OF TEMP EROSION CONTROL ITEMS. FOR MORE RIPRAP DETAIL, SEE PLAN SHEETS.

• CASS AND MASON COUNTIES

FILE NAME = c:\pw_work\PWIDOT\LAUGHLINRL\d0134498\nppds50scale.dgn	USER NAME = laughlinrl	DESIGNED -	REVISED -	STATE OF ILLINOIS DEPARTMENT OF TRANSPORTATION	SWPPP - EROSION CONTROL PLAN SHEET	F.A.P RTE.	SECTION	COUNTY	TOTAL SHEETS / SHEET NO.
	PLOT SCALE = 100.0000 ' / IN.	DRAWN -	REVISED -			614	144(B-1,B-2)	•	351 / 95
	PLOT DATE = Mar-31-2009 07:53:07AM	CHECKED -	REVISED -					CONTRACT NO. 72A76	
		DATE -	REVISED -		SCALE: SHEET NO. 8 OF 12 SHEETS STA. 887+00 TO STA. 902+00	FED. ROAD DIST. NO.	ILLINOIS	FED. AID PROJECT	

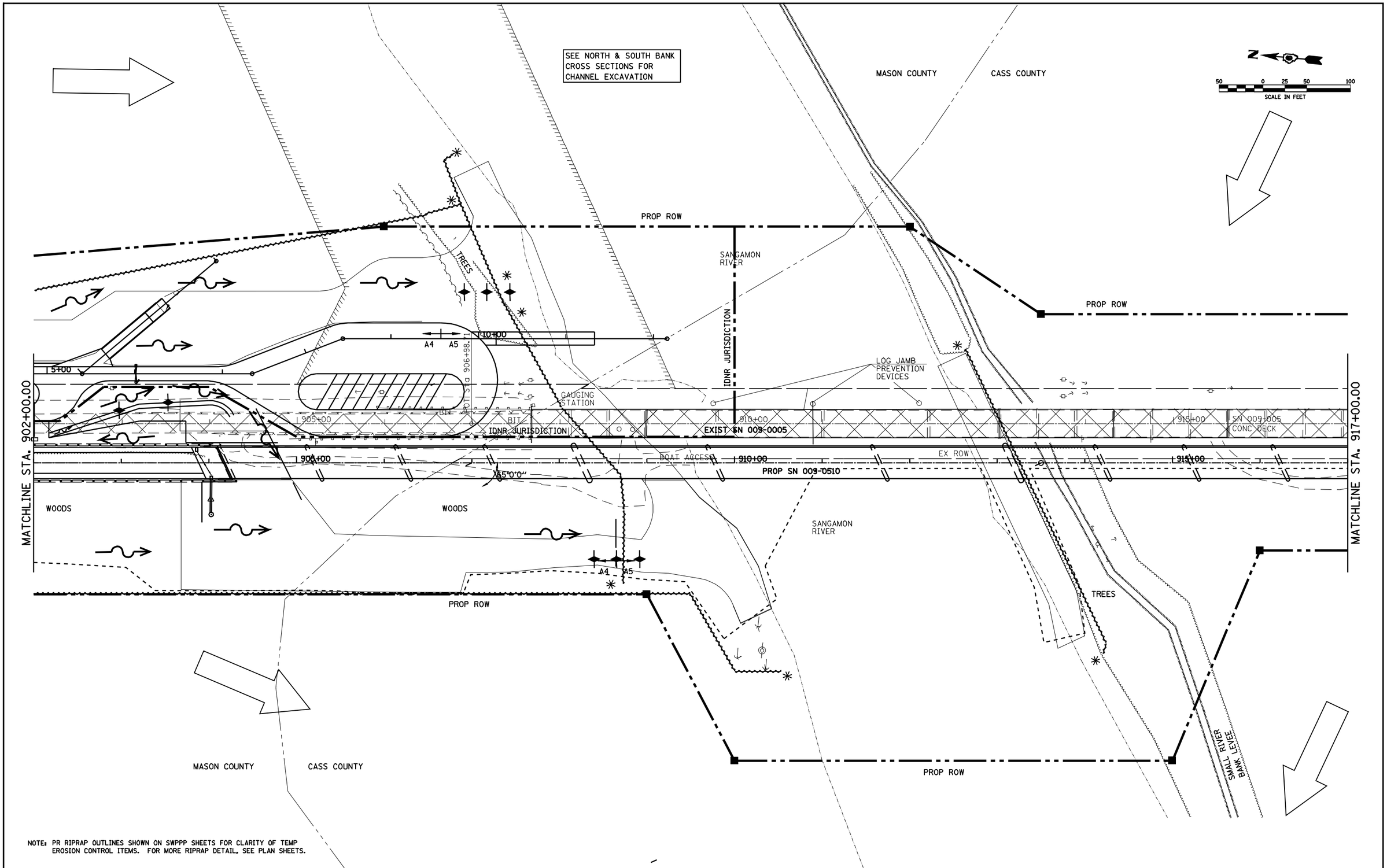

NOTE: PR RIPRAP OUTLINES SHOWN ON SWPPP SHEETS FOR CLARITY OF TEMP EROSION CONTROL ITEMS. FOR MORE RIPRAP DETAIL, SEE PLAN SHEETS.

• CASS AND MASON COUNTIES

FILE NAME = c:\pw_work\PWIDOT\LAUGHLINRL\d0134498\ppds50scale.dgn	USER NAME = laughlinrl	DESIGNED -	REVISED -	STATE OF ILLINOIS DEPARTMENT OF TRANSPORTATION	SWPPP - EROSION CONTROL PLAN SHEET	F.A.P RTE.	SECTION	COUNTY	TOTAL SHEETS / SHEET NO.
	PLOT SCALE = 100.0000 ' / IN.	DRAWN -	REVISED -			614	144(B-1,B-2)	•	351 / 96
	PLOT DATE = Mar-31-2009 07:53:09AM	CHECKED -	REVISED -					CONTRACT NO. 72A76	
		DATE -	REVISED -		SCALE: SHEET NO. 9 OF 12 SHEETS STA. 902+00 TO STA. 917+00	FED. ROAD DIST. NO.	ILLINOIS	FED. AID PROJECT	

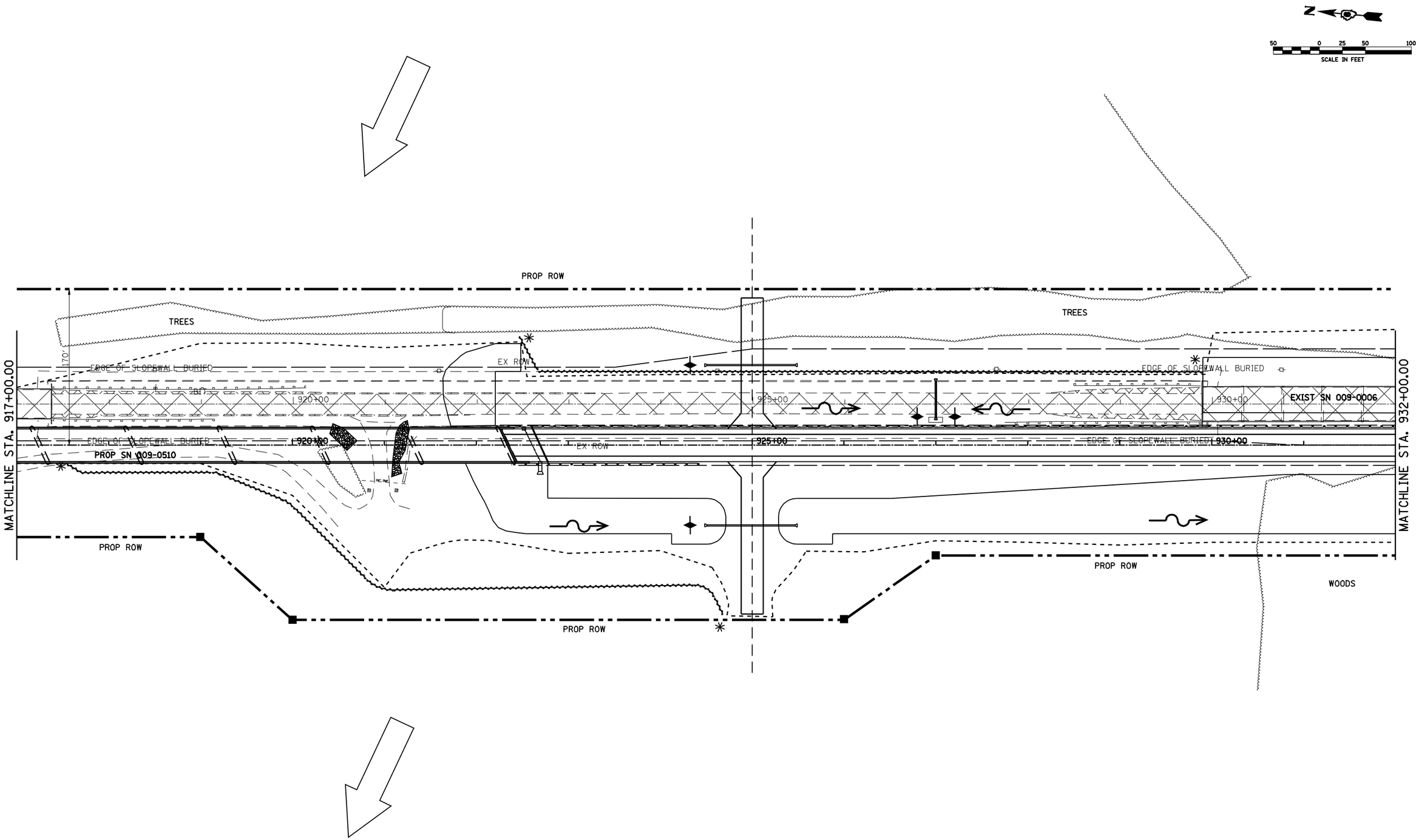

NOTE: PR RIPRAP OUTLINES SHOWN ON SWPPP SHEETS FOR CLARITY OF TEMP EROSION CONTROL ITEMS. FOR MORE RIPRAP DETAIL, SEE PLAN SHEETS.

• CASS AND MASON COUNTIES

FILE NAME = c:\pw_work\PWIDOT\LAUGHLINRL\d0134498\nppds50scale.dgn	USER NAME = laughlinrl	DESIGNED -	REVISED -	STATE OF ILLINOIS DEPARTMENT OF TRANSPORTATION	SWPPP - EROSION CONTROL PLAN SHEET	F.A.P RTE.	SECTION	COUNTY	TOTAL SHEETS / SHEET NO.
		DRAWN -	REVISED -			614	144(B-1,B-2)	•	351 / 97
	PLOT SCALE = 100.0000 ' / IN.	CHECKED -	REVISED -					CONTRACT NO. 72A76	
	PLOT DATE = Mar-31-2009 07:53:12AM	DATE -	REVISED -		SCALE: / SHEET NO. 10 OF 12 SHEETS / STA. 917+00 TO STA. 932+00	FED. ROAD DIST. NO.	ILLINOIS	FED. AID PROJECT	

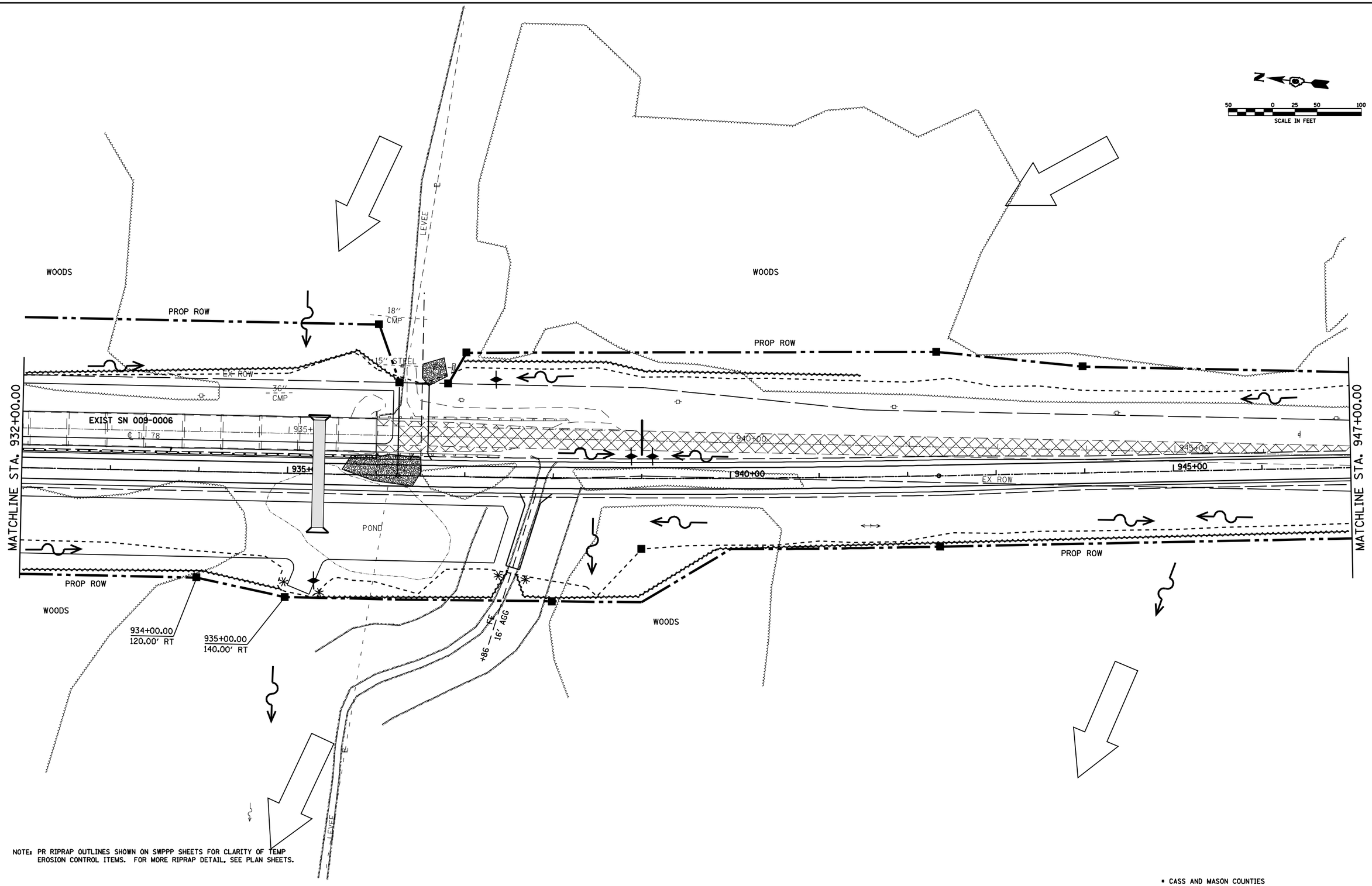

NOTE: PR RIPRAP OUTLINES SHOWN ON SWPPP SHEETS FOR CLARITY OF TEMP EROSION CONTROL ITEMS. FOR MORE RIPRAP DETAIL, SEE PLAN SHEETS.

• CASS AND MASON COUNTIES

FILE NAME = c:\pw_work\PWIDOT\LAUGHLINRL\d0134498\ppds50scale.dgn	USER NAME = laughlinrl	DESIGNED -	REVISED -
		DRAWN -	REVISED -
	PLOT SCALE = 100.0000 ' / IN.	CHECKED -	REVISED -
	PLOT DATE = Mar-31-2009 07:53:14AM	DATE -	REVISED -

STATE OF ILLINOIS
DEPARTMENT OF TRANSPORTATION

SWPPP - EROSION CONTROL PLAN SHEET

SCALE: | SHEET NO. 11 OF 12 SHEETS | STA. 932+00 TO STA. 947+00

F.A.P RTE.	SECTION	COUNTY	TOTAL SHEETS	SHEET NO.
614	144(B-1,B-2)	•	351	98

CONTRACT NO. 72A76

FED. ROAD DIST. NO. | ILLINOIS | FED. AID PROJECT

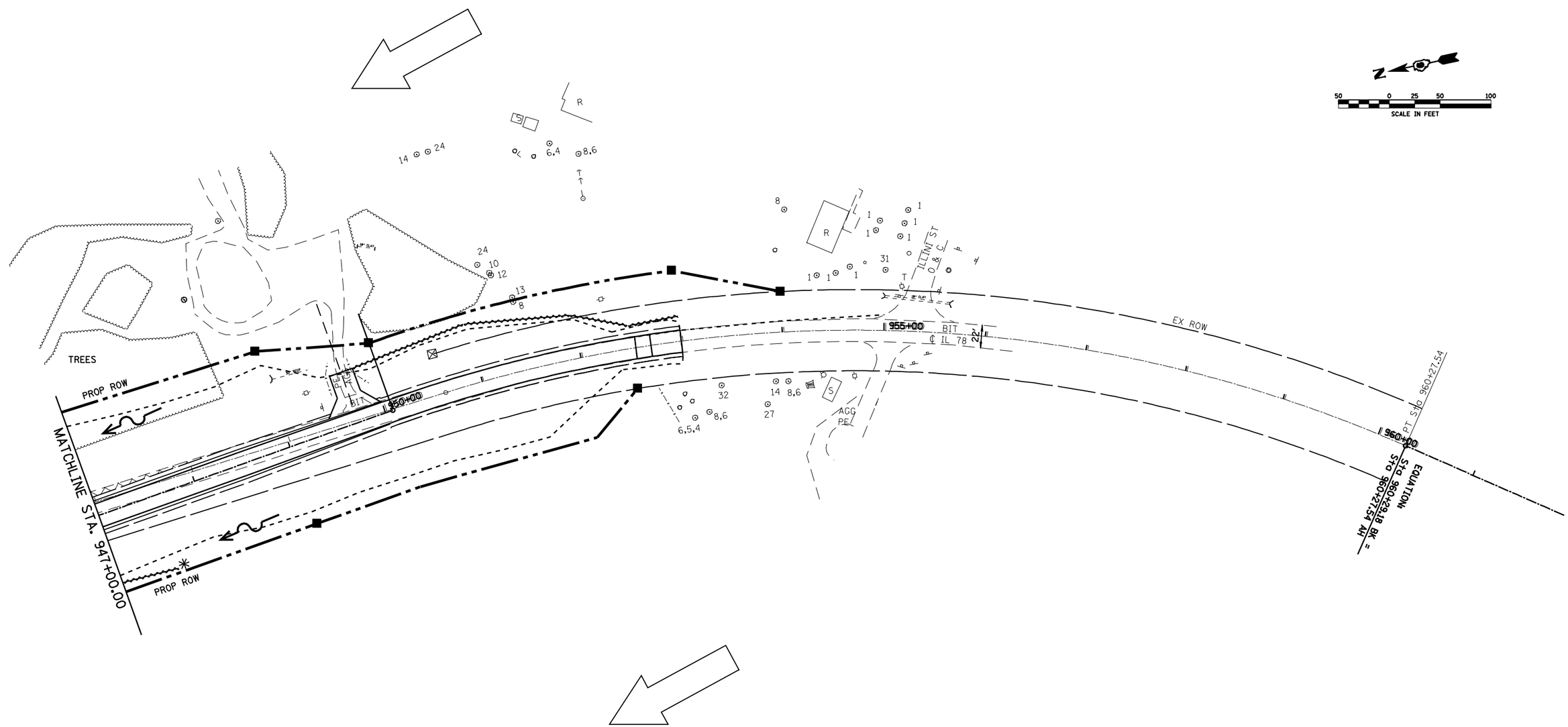

NOTE: PR RIPRAP OUTLINES SHOWN ON SWPPP SHEETS FOR CLARITY OF TEMP EROSION CONTROL ITEMS. FOR MORE RIPRAP DETAIL, SEE PLAN SHEETS.

• CASS AND MASON COUNTIES

FILE NAME = c:\pw_work\PWIDOT\LAUGHLINRL\d0134498\nppds50scale.dgn	USER NAME = laughlinrl	DESIGNED -	REVISED -
		DRAWN -	REVISED -
	PLOT SCALE = 100.0000 ' / IN.	CHECKED -	REVISED -
	PLOT DATE = Mar-31-2009 07:53:17AM	DATE -	REVISED -

STATE OF ILLINOIS
DEPARTMENT OF TRANSPORTATION

SWPPP - EROSION CONTROL PLAN SHEET

SCALE: | SHEET NO. 12 OF 12 SHEETS | STA. 947+00 TO STA. 955+00

F.A.P RTE.	SECTION	COUNTY	TOTAL SHEETS	SHEET NO.
614	144(B-1,B-2)	•	351	99

CONTRACT NO. 72A76

FED. ROAD DIST. NO. | ILLINOIS | FED. AID PROJECT

NEW CONSTRUCTION

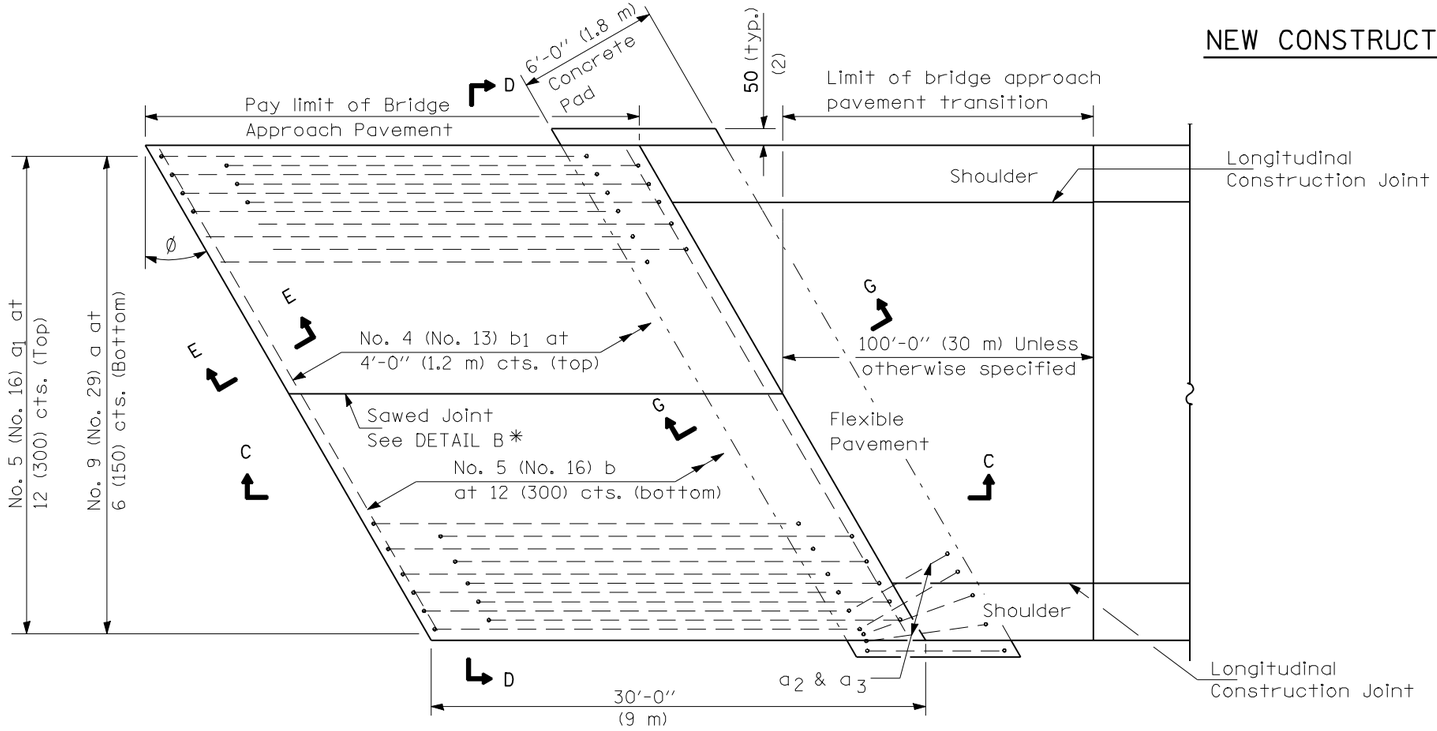

PLAN - WITH SKEW

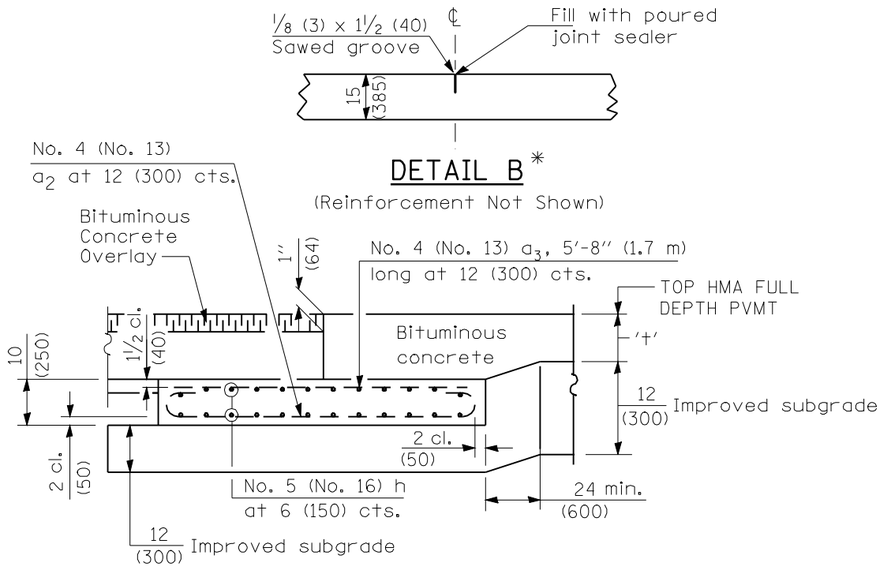

SECTION G-G - FLEXIBLE PAVT. AT N. ABUTMENT WOLF LAKE STAGE 1 & 2

(Showing reinforcement)

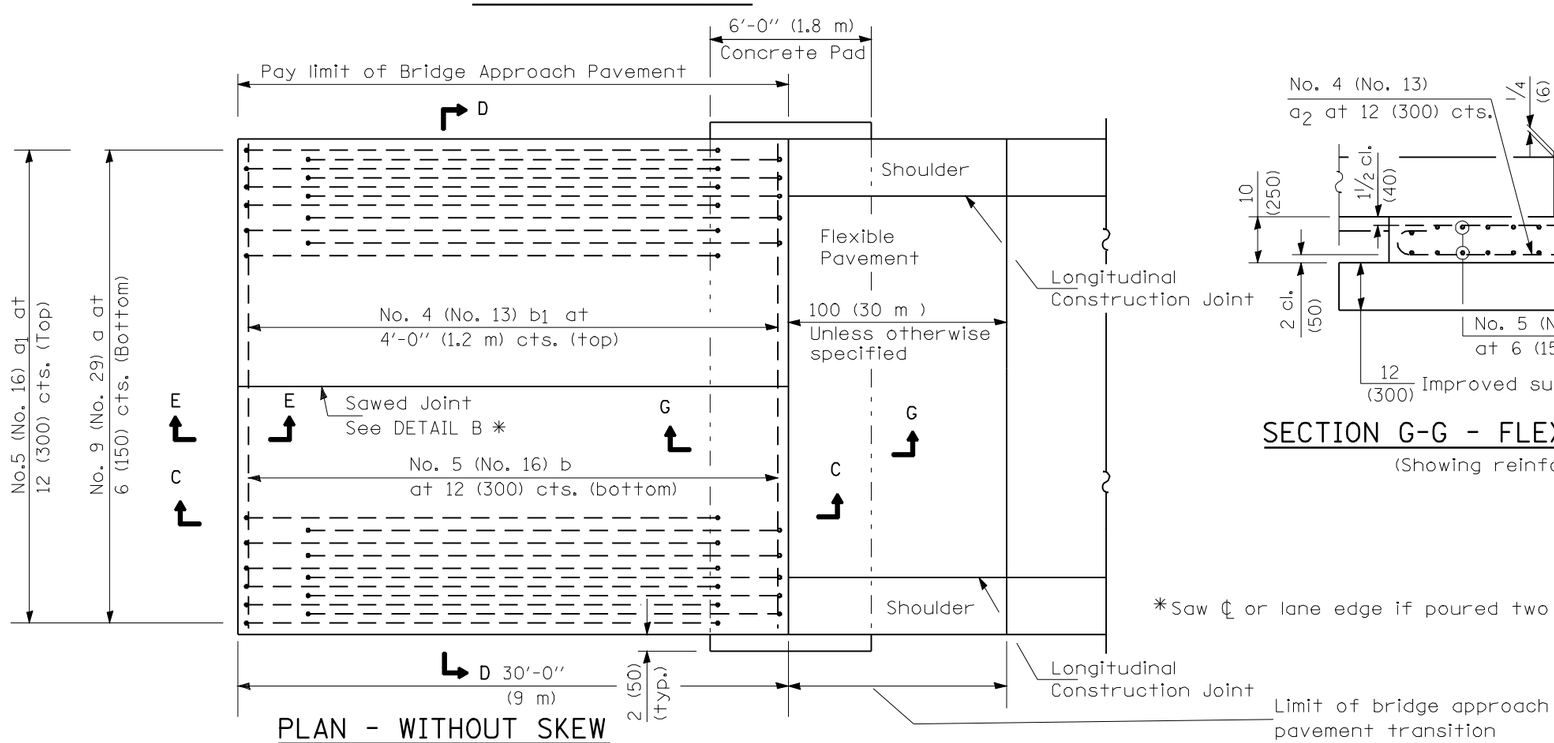

PLAN - WITHOUT SKEW

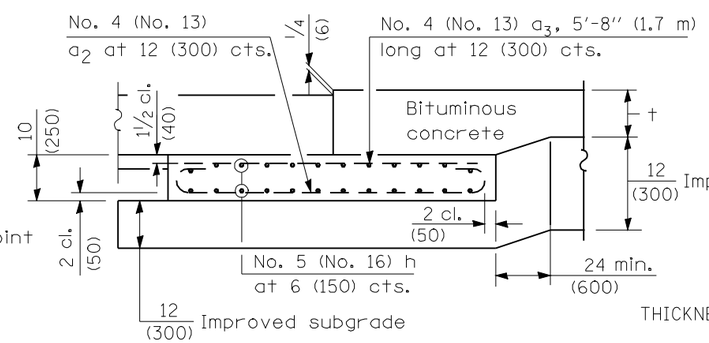

SECTION G-G - FLEXIBLE PAVEMENT

(Showing reinforcement)

GENERAL NOTES

THICKNESS-"t"=Thickness of Pavement.

See Standard 421001 for reinforcement details not shown.

See Standard 420001 for joint details not shown.

*Saw ℄ or lane edge if poured two or more lane widths at a time.

FILE NAME = c:\pw_work\PWIDOT\LAUGHLINRL\d0134498\BridgeApproachPvmtDetails.dgn	USER NAME = laughlinrl	DESIGNED -	REVISED -	STATE OF ILLINOIS DEPARTMENT OF TRANSPORTATION	BRIDGE APPROACH PAVEMENT DETAILS	F.A.P RTE.	SECTION	COUNTY	TOTAL SHEETS	SHEET NO.
	PLOT SCALE = 0:24.384 ms / IN.	DRAWN -	REVISED -			614	144(B-1, B-2)	CASS, MASON	351	100
	PLOT DATE = Mar-31-2009 07:57:03AM	CHECKED -	REVISED -					CONTRACT NO. 72A76		
		DATE -	REVISED -		SCALE: SHEET NO. 1 OF 4 SHEETS STA. TO STA.	FED. ROAD DIST. NO.	ILLINOIS	FED. AID PROJECT		