STATE OF ILLINOIS
DEPARTMENT OF TRANSPORTATION

ROUTE NO.	SECTION	COUNTY	TOTAL SHEETS	SHEET NO.
FAP Rte 614	144(B-1)	Cass & Mason	351	208
FED. ROAD DIST. NO. 7		ILLINOIS	FED. AID PROJECT-	

SHEET NO. 72
86 SHEETS

Contract #72A76

METAL SHELL PILE TABLE

Designation and outside diameter	Wall thickness t	Weight per foot (Lbs./ft.)	Inside volume (yd.^{3}/ft.)
PP12	0.179''	22.60	0.0274
PP12	0.250''	31.37	0.0267
PP14	0.250''	36.71	0.0368
PP14	0.312''	45.61	0.0361

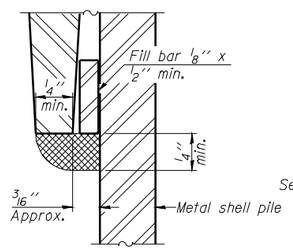

DETAIL A

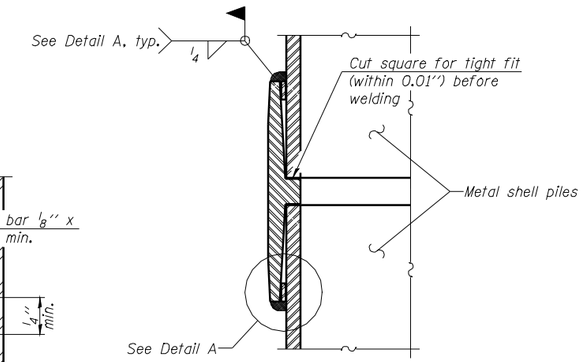

Notes:
The 1/8'' x 1/2'' min. fill bar may be constructed of 2 bars with a 1/8'' max. gap between them.
Pile segments shall be driven to solid contact with splicer before welding.

WELDED COMMERCIAL SPLICE

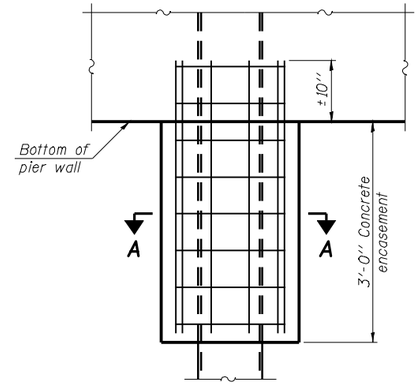

ELEVATION

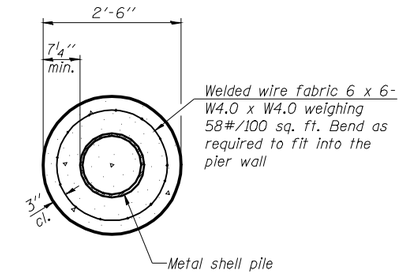

SECTION A-A

Note:
Forms for encasement may be omitted when soil conditions permit.

CONCRETE ENCASEMENT AT PIERS

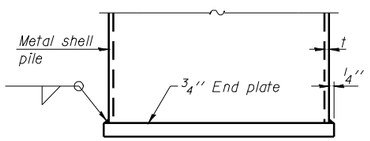

END PLATE ATTACHMENT

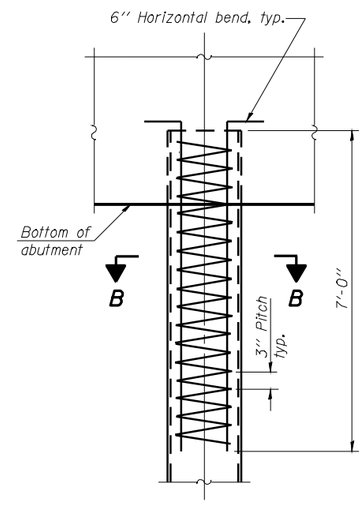

ELEVATION

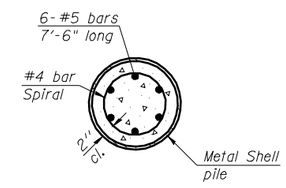

SECTION B-B

METAL SHELL REINFORCEMENT AT ABUTMENTS

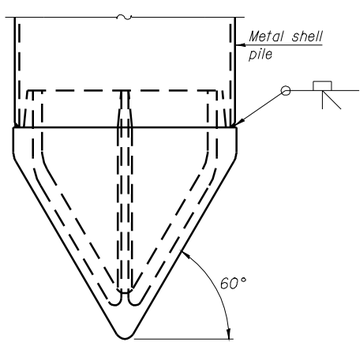

Note A:
When called for on the plans, the Contractor shall furnish metal shell pile shoes consisting of a single piece conical pile point as shown. The pile shoes shall be cast in one piece steel according to either ASTM A 148 Grade 90-60 or AASHTO M 103 Grade 65-35 and shall provide full bearing over the full circumference of the metal shell pile. The pile shoe shall have tapered leads to assure proper alignment and fitting and shall be secured to the pile with a circumferential weld.

METAL SHELL PILE SHOE ATTACHMENT

(See Note A)

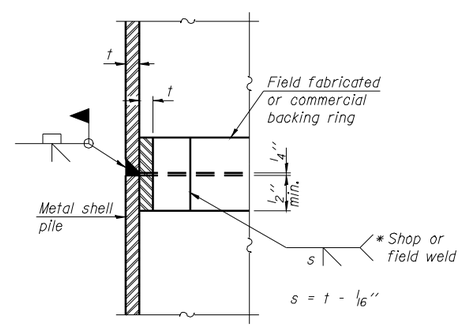

COMPLETE PENETRATION WELD SPLICE

* Field fabricated backing ring may be made from pile shell by removing segment to allow reducing circumference and vertically rejoin with partial joint penetration weld.

Note:
The metal shell piles shall be according to ASTM A 252 Grade 3.

F-MS 10-1-08

METAL SHELL PILE DETAILS
F.A.P. 614 (IL 78) OVER SANGAMON RIVER
PUBLIC WATERS
CASS & MASON COUNTIES
SECTION 144 (B-1)
STA. 913+26.00
STRUCTURE NUMBER 009-0510

PROFESSIONAL DESIGN FIRM LICENSE #184-001084

© Copyright Hanson Professional Services Inc. MS_YEAR

HANSON
Hanson Professional Services Inc.

JOB NO. 07S2026
DATE 03/27/09

LAYOUT	TEH	02/03/09
DRAWN	BWC	02/03/09
REVIEWED	TEH	02/03/09

Mar-31-2009 08:04:46 AM
c:\pw_work\PWIDOT\LAUGHLIN\RLvd0134498\009-0510 Master Steel Filed.dgn