FIELD TILE JUNCTION VAULTS 600 (24) AND 900 (36) DIA.

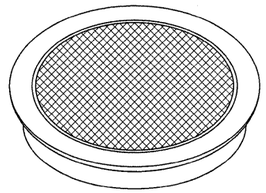

FRAME & LID FOR 600 (24) VAULT

FRAME & LID FOR 900 (36) VAULT

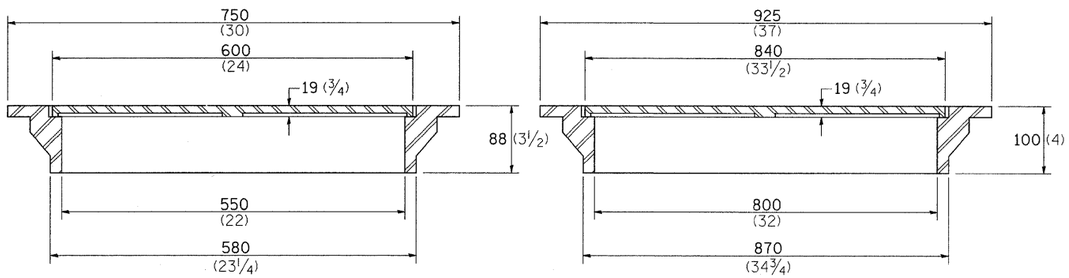

TOTAL WEIGHT: 66 Kg (146 lbs)

TOTAL WEIGHT: 127 Kg (280 lbs)

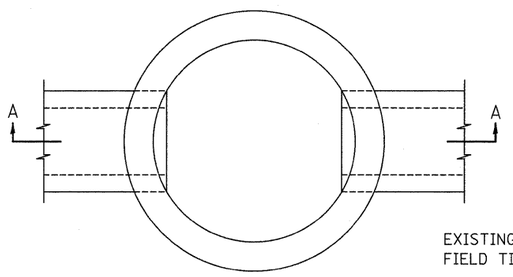

PLAN

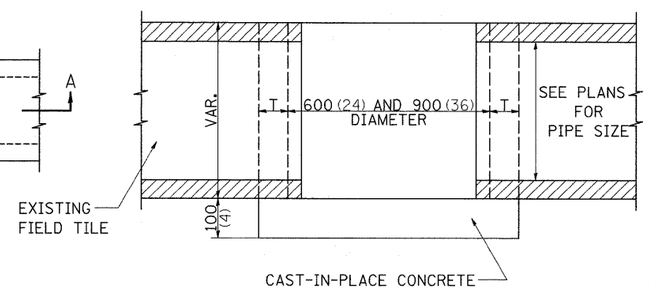

SECTION A-A

ALTERNATE MATERIALS FOR WALLS	T
BRICK MASONRY	200 (8)
CAST-IN-PLACE CONCRETE	150 (6)
CONCRETE MASONRY UNIT	125 (5)
PRECAST REINFORCED CONCRETE SECTION	75 (3)

NOTE: THE FRAME AND LID IS REQUIRED ON ALL JUNCTION VAULTS.

ALL DIMENSIONS ARE IN MILLIMETERS (INCHES) UNLESS OTHERWISE NOTED.

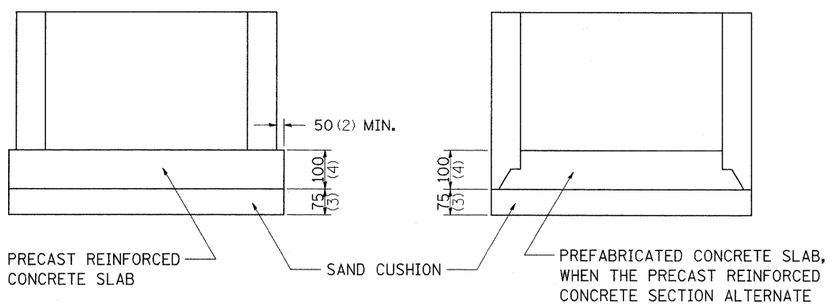

ALTERNATE METHODS

REVISED - 5-03-94

WITNESS MARKER FOR PERMANENT SURVEY MARKERS, TYPE II

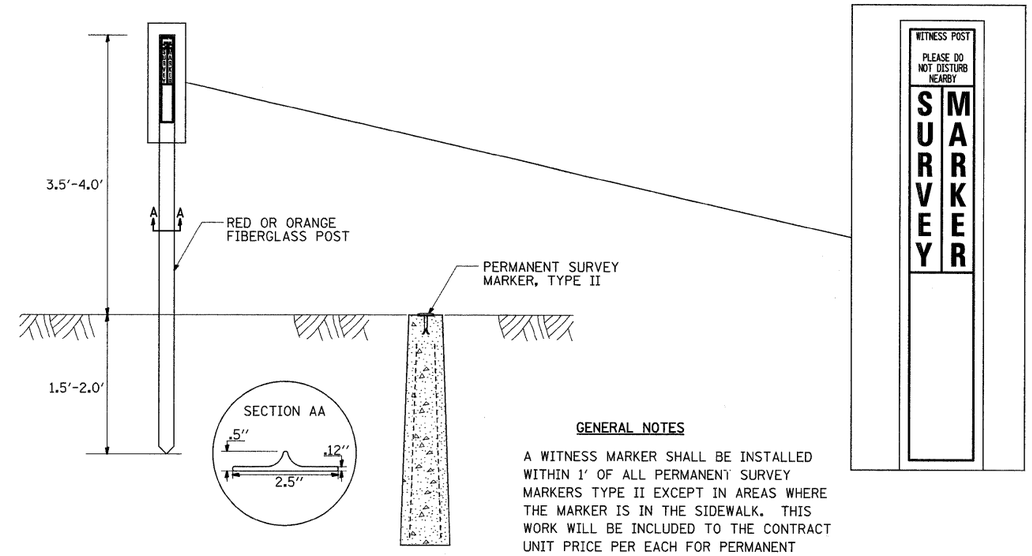

GENERAL NOTES

A WITNESS MARKER SHALL BE INSTALLED WITHIN 1' OF ALL PERMANENT SURVEY MARKERS TYPE II EXCEPT IN AREAS WHERE THE MARKER IS IN THE SIDEWALK. THIS WORK WILL BE INCLUDED TO THE CONTRACT UNIT PRICE PER EACH FOR PERMANENT SURVEY MARKERS, TYPE II.

PERMANENT SURVEY MARKERS, TYPE II

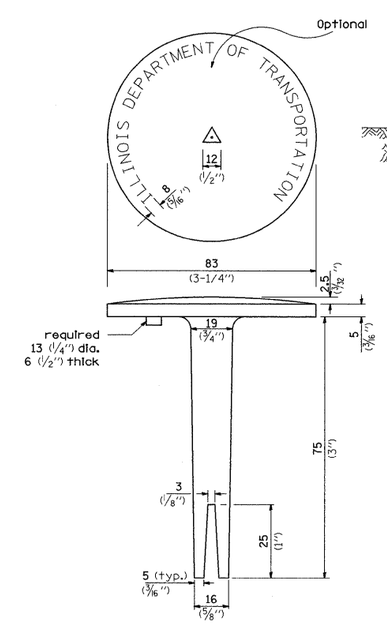

BRASS OR ALUMINUM TABLET

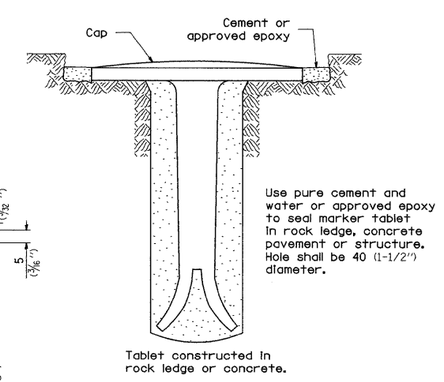

TYPE II

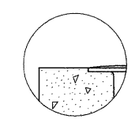

DETAIL A

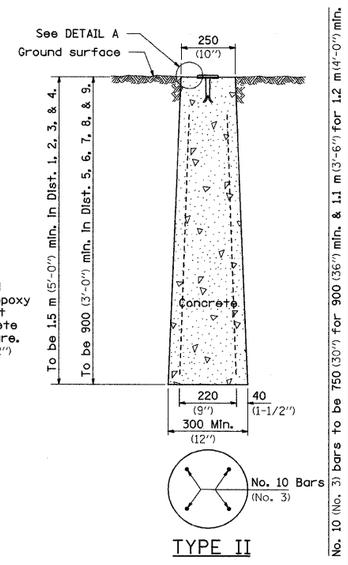

TYPE II

CAST-IN-PLACE MARKER

ALL DIMENSIONS ARE IN MILLIMETERS (INCHES) UNLESS OTHERWISE NOTED.

REVISED - 10-21-08	REGION 2 / DISTRICT 2 STANDARD	F.A.S. RTE.	SECTION	COUNTY	TOTAL SHEETS / SHEET NO.
REVISED -		1188	118T	Henry	52 / 29
REVISED -		CONTRACT NO. 64D13			
REVISED -	SCALE: 50.2000 ' / IN. SHEET NO. OF SHEETS STA. TO STA.	FED. ROAD DIST. NO.	ILLINOIS	FED. AID PROJECT	

PLOT DATE = Tue Mar 10 08:13:20 2009