F.A.P. RTE.	SECTION	COUNTY	TOTAL SHEETS	SHEET NO.
309	(17R)B	WHITESIDE	376	54
FED. ROAD DIST. NO. 2	ILLINOIS	FED. AID PROJECT		

Contract #64B74

STATE OF ILLINOIS
DEPARTMENT OF TRANSPORTATION

When "A" is 3'-6" or less, the temporary concrete barrier shall be anchored to the new slab according to Detail I or Detail II. No anchorage is required when "A" is greater than 3'-6".

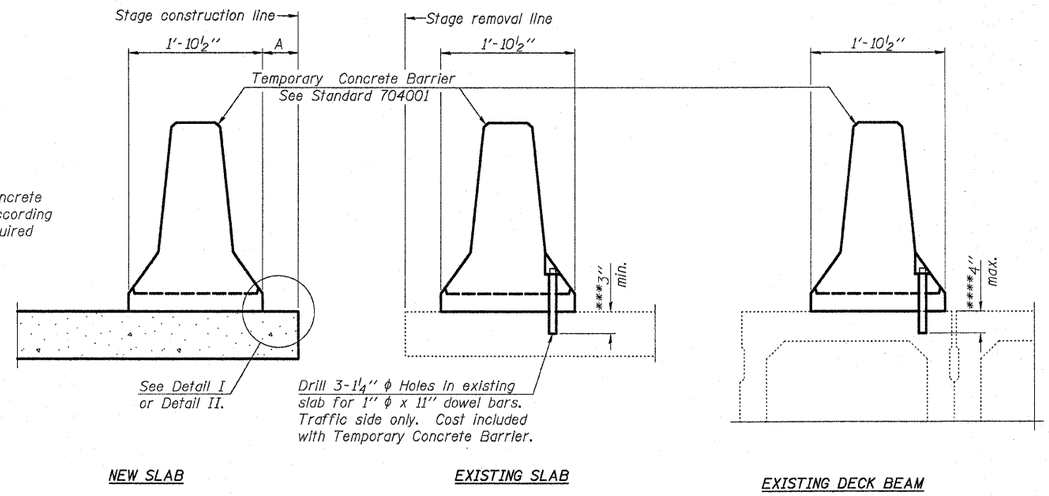

SECTIONS THRU SLAB OR DECK BEAM

NOTES

Detail I - With Bar Splicer or Couplers:
Connect one (1) 1"x7"x10" steel ℙ to the top layer of couplers with 2-⅝" ϕ bolts screwed to coupler at approximate ℄ of each barrier panel.

Detail II - With Extended Reinforcement Bars:
Connect one (1) 1"x7"x 10" steel ℙ to the concrete slab or concrete wearing surface with 2-⅝" ϕ Expansion Anchors or cast in place inserts spaced between the top layer of reinforcement at approximate ℄ of each barrier panel.

Cost of anchorage is included with Temporary Concrete Barrier.

The 1" x 7" x 10" plate shall not be removed until stage II construction forms and all reinforcement bars are in place and the concrete is ready to be placed.

*** Dimension shown is minimum required embedment into concrete. If hot-mix asphalt wearing surface is present, minimum embedment shall be in addition to wearing surface depth.

**** If existing deck beam is to remain in place after stage construction, embedment shall only be into wearing surface and not into existing deck beam concrete.

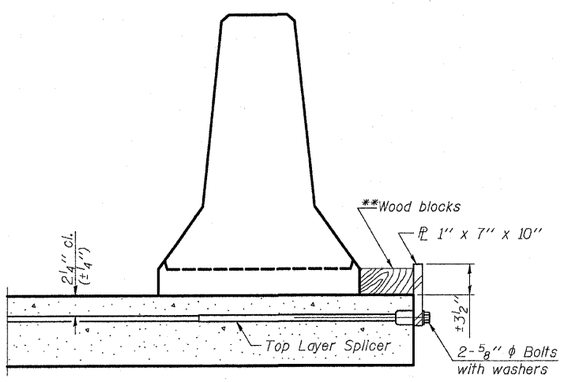

DETAIL I

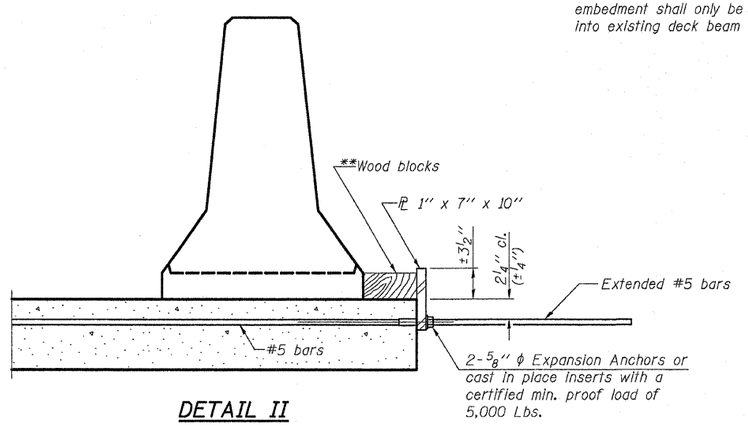

DETAIL II

**Wood blocks may be omitted when required to provide minimum stage traffic lane width. When the wood blocks are omitted, the concrete barrier shall be in direct contact with the steel retainer plate.

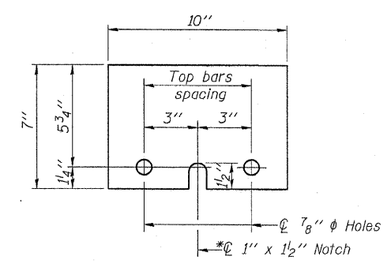

STEEL RETAINER ℙ 1" x 7" x 10"

* Required only with Detail II

TEMPORARY CONCRETE BARRIER
FOR STAGE CONSTRUCTION
U.S. RTE. 30/IL RTE. 78 OVER ROCK CREEK
F.A.P. ROUTE 309, SECTION (17R)B
WHITESIDE COUNTY
STATION 1037+84.35
STRUCTURE NO. 098-0113

DATE: December 18, 2008
DRAWN BY: D. Schettler
CHECKED BY: A. Yargicoglu

PATRICK ENGINEERING INC.
LISLE, ILLINOIS

n:\lisle\dot1\20608.015\work order #(us 30 over rock creek\drawings\struct\04-TempConcrBarrier.dgn
ayargicoglu(Struct) 12/17/2008 12:27:34 PM

10-1-08